OMRON

RFID System

V680S Series

User's Manual (PROFINET)

Reader/Writer

V680S-HMD63-PNT
V680S-HMD64-PNT
V680S-HMD66-PNT

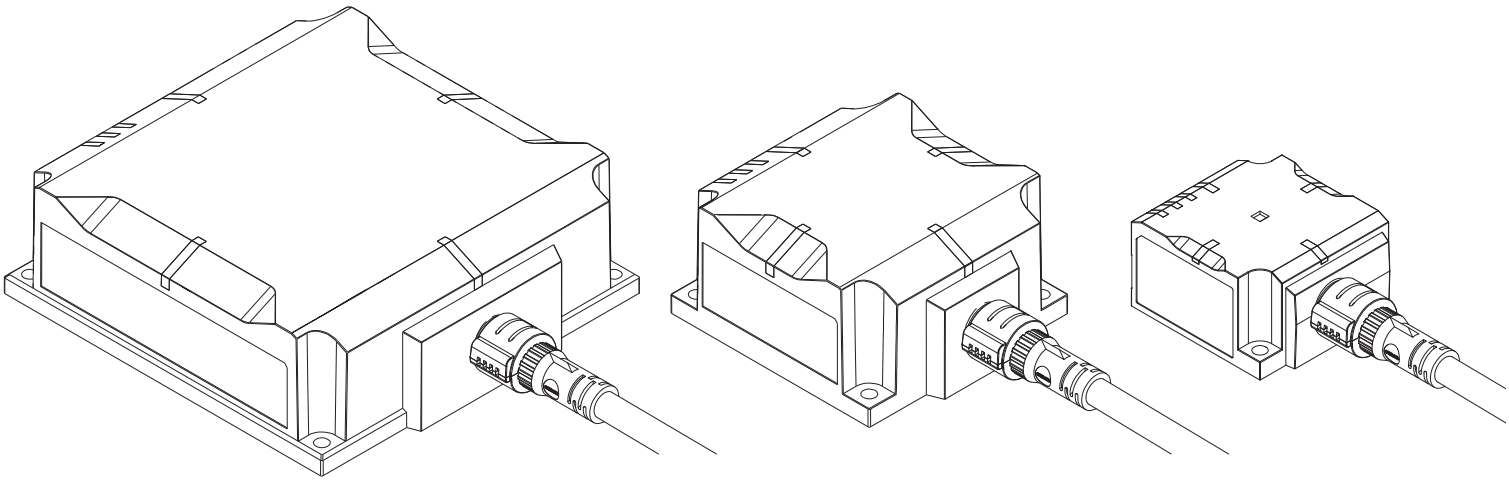

Man. No. Z354-E1-11

Introduction

Thank you for purchasing a V680S-series RFID System. This manual describes the functions, performance, and application methods needed for optimum use of the V680S-series RFID System.

Please observe the following items when using the V680S-series RFID System.

- Allow the V680S-series RFID System to be installed and operated only by qualified specialists with a sufficient knowledge of electrical systems.
- Read and understand this manual before attempting to use the RFID System and use the RFID System correctly.
- Keep this manual in a safe and accessible location so that it is available for reference when required.

NOTICE

(1) No part of this publication may be reproduced, stored in a retrieval system, or transmitted, in any form, or by any means, mechanical, electronic, photocopying, recording, or otherwise, without the prior written permission of OMRON.

(2) Because OMRON is constantly striving to improve its high-quality products, the information contained in this manual is subject to change without notice.

(3) Every precaution has been taken in the preparation of this manual. Nevertheless, OMRON assumes no responsibility for errors or omissions. Neither is any liability assumed for damages resulting from the use of the information contained in this publication. If you find any problems in this manual, please contact your OMRON representative. If you do so, please provide the Cat. No. that is given at the back of this manual.

Trademarks

- Microsoft, Windows, Edge, Internet Explorer are either registered trademarks or trademarks of Microsoft Corporation in the USA and other countries.
- ODVA and EtherNet/IP are trademarks of the ODVA.
- Google Chrome is trademarks or registered trademarks of Google LLC.

Other system names and product names used in this manual are the trademarks or registered trademarks of the respective companies.

Introduction	**Terms and Conditions Agreement** (Always Read This Information)
Section 1	Product Overview
Section 2	System Configuration
Section 3	Component Names
Section 4	Installation and Connections
Section 5	Preparations for Communications
Section 6	Functions
Section 7	Host Communications Specifications
Section8	Web Browser Interface
Section9	Troubleshooting
Section10	Maintenance and Inspection
Section11	Appendices

RFID System

V680S-HMD63-PNT	Reader/Writer
V680S-HMD64-PNT	Reader/Writer
V680S-HMD66-PNT	Reader/Writer

User's Manual

Terms and Conditions Agreement

Warranty, Limitations of Liability

1. Warranties

▪ Exclusive Warranty

Omron's exclusive warranty is that the Products will be free from defects in materials and workmanship for a period of twelve months from the date of sale by Omron (or such other period expressed in writing by Omron). Omron disclaims all other warranties, express or implied.

▪ Limitations

OMRON MAKES NO WARRANTY OR REPRESENTATION, EXPRESS OR IMPLIED, ABOUT NON-INFRINGEMENT, MERCHANTABILITY OR FITNESS FOR A PARTICULAR PURPOSE OF THE PRODUCTS. BUYER ACKNOWLEDGES THAT IT ALONE HAS DETERMINED THAT THE PRODUCTS WILL SUITABLY MEET THE REQUIREMENTS OF THEIR INTENDED USE.
Omron further disclaims all warranties and responsibility of any type for claims or expenses based on infringement by the Products or otherwise of any intellectual property right.

▪ Buyer Remedy

Omron's sole obligation hereunder shall be, at Omron's election, to (i) replace (in the form originally shipped with Buyer responsible for labor charges for removal or replacement thereof) the non-complying Product, (ii) repair the non-complying Product, or (iii) repay or credit Buyer an amount equal to the purchase price of the non-complying Product; provided that in no event shall Omron be responsible for warranty, repair, indemnity or any other claims or expenses regarding the Products unless Omron's analysis confirms that the Products were properly handled, stored, installed and maintained and not subject to contamination, abuse, misuse or inappropriate modification. Return of any Products by Buyer must be approved in writing by Omron before shipment. Omron Companies shall not be liable for the suitability or unsuitability or the results from the use of Products in combination with any electrical or electronic components, circuits, system assemblies or any other materials or substances or environments. Any advice, recommendations or information given orally or in writing, are not to be construed as an amendment or addition to the above warranty.
See http://www.omron.com/global/ or contact your Omron representative for published information.

2. Limitation on Liability; Etc

OMRON COMPANIES SHALL NOT BE LIABLE FOR SPECIAL, INDIRECT, INCIDENTAL, OR CONSEQUENTIAL
DAMAGES, LOSS OF PROFITS OR PRODUCTION OR COMMERCIAL LOSS IN ANY WAY CONNECTED WITH THE PRODUCTS, WHETHER SUCH CLAIM IS BASED IN CONTRACT, WARRANTY, NEGLIGENCE OR STRICT LIABILITY.
Further, in no event shall liability of Omron Companies exceed the individual price of the Product on which liability is asserted.

Application Considerations

1. Suitability of Use

Omron Companies shall not be responsible for conformity with any standards, codes or regulations which apply to the combination of the Product in the Buyer's application or use of the Product. At Buyer's request, Omron will provide applicable third party certification documents identifying ratings and limitations of use which apply to the Product. This information by itself is not sufficient for a complete determination of the suitability of the Product in combination with the end product, machine, system, or other application or use. Buyer shall be solely responsible for determining appropriateness of the particular Product with respect to Buyer's application, product or system. Buyer shall take application responsibility in all cases.

NEVER USE THE PRODUCT FOR AN APPLICATION INVOLVING SERIOUS RISK TO LIFE OR PROPERTY WITHOUT ENSURING THAT THE SYSTEM AS A WHOLE HAS BEEN DESIGNED TO ADDRESS THE RISKS, AND THAT THE OMRON PRODUCT(S) IS PROPERLY RATED AND INSTALLED FOR THE INTENDED USE WITHIN THE OVERALL EQUIPMENT OR SYSTEM.

2. Programmable Products

Omron Companies shall not be responsible for the user's programming of a programmable Product, or any consequence thereof.

Disclaimers

1. Performance Data

Data presented in Omron Company websites, catalogs and other materials is provided as a guide for the user in determining suitability and does not constitute a warranty. It may represent the result of Omron's test conditions, and the user must correlate it to actual application requirements. Actual performance is subject to the Omron's Warranty and Limitations of Liability.

2. Change in Specifications

Product specifications and accessories may be changed at any time based on improvements and other reasons. It is our practice to change part numbers when published ratings or features are changed, or when significant construction changes are made. However, some specifications of the Product may be changed without any notice. When in doubt, special part numbers may be assigned to fix or establish key specifications for your application. Please consult with your Omron's representative at any time to confirm actual specifications of purchased Product.

3. Errors and Omissions

Information presented by Omron Companies has been checked and is believed to be accurate; however, no responsibility is assumed for clerical, typographical or proofreading errors or omissions.

Precautions for Safe Use

Observe the following precautions to ensure safe use of the Product.

1. Installation and Storage Environment

- Do not install the Product near any equipment that generates a large amount of heat (such as heaters, transformers, and large-capacity resistors).
- If multiple Reader/Writers are installed near each other, communications performance may decrease due to mutual interference. Refer to *Mutual Interference of Reader/Writers* in *RF Tag Installation Precautions* in *Section 11 Appendices* and check to make sure there is no mutual interference between Reader/Writers.

2. Installation and Removal

- Never use an AC power supply. Doing so may result in rupture.
- Wire the Product correctly. Incorrect wiring may result in rupture or burning.
- Connect the Ethernet Cable to a host device (e.g., Switching Hub or PLC) that supports STP and ground the host device to 100 Ω or less.
- The communications range is adversely affected if there is any metal material around the RF Tag.
- Transmission will not be possible if the front and back panels are mistakenly reversed and the Unit is mounted to a metallic surface.
  V680-D1KP66MT
  V680S-D2KF67M/-D8KF67M
  V680S-D2KF68M/-D8KF68M
- The transmission distance will be reduced when the Unit is not mounted to a metallic surface.
  V680-D1KP66MT
  V680S-D2KF67M/-D8KF67M
  V680S-D2KF68M/-D8KF68M
- The maximum communications range can be obtained when the Antenna faces the RF tag directly. When the RF tag is installed at a tilt, the communications range is reduced. Consider the effect of the RF tag at tilt when installing the RF Tag.
- Provide the mounting distances between plural RF tags to prevent them from malfunctions due to mutual interference.
- if the central axis of an antenna and RF tag shifts, a communications range will fall.
- Do not touch the product immediately after usage at high temperatures, Doing so may occasionally result in burning.

3. Application Methods

- Do not bend the Cable to a bending radius of 40 mm or less. Doing so may break the wires.
- If an error is detected in the Product, immediately stop operation and turn OFF the power supply. Consult with an OMRON representative.

4. Cleaning

- Do not clean the Product with paint thinner, benzene, acetone, or kerosene.

5. Disposal

- Dispose of the Product as industrial waste.

Precautions for Correct Use

Always observe the following precautions to prevent operation failures, malfunctions, and adverse effects on performance and equipment.

1. Installation and Storage Environment

Do not use or store the Product in the following locations.

- Locations subject to combustible gases, explosive gases, corrosive gases, dust, dirt, metal powder, or salt
- Locations where the specified ambient temperature range or ambient humidity range is exceeded
- Locations subject to extreme temperature changes that may result in condensation
- Locations subject to direct vibration or shock outside the specified ranges

2. Installation

- This Product uses a frequency band of 13.56 MHz to communicate with RF Tags. Some transceivers, motors, inverters, switch-mode power supplies, and other devices generate electrical noise that will affect these communications. If any of these devices are located in the vicinity of the Product, they may affect communications with RF Tags, and may possibly damage the RF Tags. Prior to using the Product in the vicinity of any of these devices, perform a test to determine whether the Product can be used under the resulting influence.
- Connect the control signal to the positive and negative sides of the power supply.

The control signal is used to change the operation mode of the Reader/Writer.

Refer to *Connector* in *Section 3 Component Names* for the connection methods.
p.63

- Do not exceed the rated voltage range. Doing so may result in Product destruction or burning.
- Tighten the mounting screws to a torque of 1.2 N·m.
- Tighten the Cable connector to a torque of 0.39 to 0.49 N·m.
- Mount the two-way Branch Cable with an M4 screw.

3. Application Methods

- Do not drop the Product.
- Do not pull on the Cables with excessive force.
- Do not attempt to disassemble, repair, or modify the Product.
- If you use the products in an environment that will subject them to oil, confirm that the oil that is used will not adversely affect the resins used in the products.

4. Maintenance

- Perform inspections both daily and periodically.

Refer to *Maintenance and Inspection* in *Section 10 Maintenance and Inspection* for the items to inspect.
p.234

Meanings of Symbols

CHECK!

Indicates particularly important points related to a function, including precautions and application advice.

Indicates page numbers containing relevant information.

Indicates reference to helpful information and explanations for difficult terminology.

MEMO

Table of Contents

Introduction 1

- Precautions for Safe Use 4
- Precautions for Correct Use 5
- Meanings of Symbols 6
- Table of Contents 8

Section 1 Product Overview 15

- Features 16
- Application Flowchart 20
- Product Specifications 27
  - Reader/Writer 27
  - Connector Cover (Slim Type) 31
  - RF Tag 32
- Data Characteristics 44
  - Communications Range Specifications 44

Section 2 System Configuration 53

- System Configuration 54

Section 3 Component Names 59

- Component Names 60
  - Reader/Writer 60
  - RF Tag 64

Section 4 Installation and Connections 67

- Installation 68
  - Reader/Writer 68
  - Connector Cover 71
  - RF Tag 73

Connections and Wiring 80
Connecting and Removing the Reader/Writer Power Cable and Ethernet Cable 80

Section 5 Preparations for Communications 83
Starting the Reader/Writer 84
Reader/Writer Starting Procedure 84
Setting Communications Conditions 85
Preparations for Work 85
Setting the IP Address of the Reader/Writer from a Web Browser 87
Setting the IP Address of the Reader/Writer on the Engineering Tool 88
Setting Cyclic Data Exchanges 89

Section 6 Functions 91
Operation Mode 92
Run Mode 92
Safe Mode 92
RF Tag Communications 93
Communications Options 93
Normal RF Tag Communications 98
Tag Memory Management 98
Reader/Writer Controls 100
RESET 100
Maintenance 101
Reading Device Information 101
Setting Functions 102
Initialization 102
Setting Communications Conditions 103
Network Settings 1 05
Error Logs 106
System Error Log 106
Command Error Log 106
Web Server 107
Status Monitoring, Setting, and Confirmation 107
Convenient Functions 107
RFID System Maintenance 108
Communication Diagnostic 108
RF Analyzer 111

Multi-Reader/Writer Operation 113
Field Extension Mode 115
Traveling Mode 116
Using Communication Diagnostic and the RF Analyzer 118
Using the Web Server 118
Using Multi-Reader/Writer Operation 124
Using Field Extension Mode 124
Enabling Field Extension Mode 125
Using High-speed Traveling Mode 135

Section 7 Host Communications Specifications 145
PROFINET IO Communications Protocol 146
Data Exchange with PROFINET IO 146
PROFINET IO Communications with the Reader/Writer 147
Setting Up Cyclic Data Exchanges 148
Memory Assignments 149
V680S Commands 151
V680S Command Details 154
READ ID 154
READ DATA 155
WRITE DATA 156
LOCK 157
DATA FILL 158
RF TAG OVERWRITE COUNT CONTROL 159
RESTORE DATA 160
COPY DATA 161
INITIALIZE 163
SET RF TAG COMMUNICATIONS 164
GET RF TAG COMMUNICATIONS SETTINGS 165
SET MULTI-READER/WRITER OPERATION 166
GET MULTI-READER/WRITER SETTINGS 168
GET MODEL INFORMATION 170
GET FIRMWARE VERSION 171
GET OPERATING TIME 172
MEASURE NOISE 173
GET COMMAND ERROR LOG 174
GET RESTORE INFORMATION 176

GET MULTI-READER/WRITER STATUS 178
RESET 179
Time Charts 180
Time Charts 180

Section 8 Web Browser Interface 185
Web Browser Operation Window 186
Operation Interface 188
Password Entry View 188
Status View 189
Network Settings View 190
Communications Settings View 192
SET MULTI-READER/WRITER OPERATION 193
RF Tag Communications View 194
Log View 195
Noise Monitor View 196
RF Analyzer 197
Reboot 201
Configuration 202
Configuration File 207

Section 9 Troubleshooting 209
Error Descriptions 210
Fatal Errors 210
Nonfatal Errors 211
Errors and Indicator Status 212
Fatal Errors 212
Nonfatal Errors 214
Cyclic Data Exchanges Error 214
Errors and Countermeasures 215
Reader/Writer Operation Errors 215
IP Address Duplication Error 216
System Errors 216
V680S Command Errors 218
RF Tag Communications Errors 219

Troubleshooting Flowcharts 220
Main Check Flowchart 220
System Connections Check Flowchart 221
Operating Conditions and External Environment Check Flowchart 222
Host Device Communications Check Flowchart 223
RF Tag Communications Check Flow 224
About The Ethernet Communication Abnormality 225
When the Web browser screen is not displayed or the screen layout is strange 226
Google Chrome 226
Internet explorer11 228
Microsoft Edge 229
Safe Mode 231
Starting in Safe Mode 231

Section 10 Maintenance and Inspection 233
Maintenance and Inspection 234

Section 11 Appendices 235
Data Characteristics 236
RF Tag Communications Range (for Reference Only) 236
RF Tag Communications Time (for Reference Only) 244
Reader/Writer Installation Precautions 248
V680S-HMD63-PNT 248
V680S-HMD64-PNT 249
V680S-HMD66-PNT 251
RF Tag Installation Precautions 253
V680-D1KP54T 253
V680-D1KP66T 256
V680-D1KP66MT 259
V680-D1KP66T-SP 262
V680-D1KP58HTN 266
V680S-D2KF67 268
V680S-D2KF67M 271
V680S-D8KF67 274
V680S-D8KF67M 277
V680S-D2KF68 280

V680S-D2KF68M 283
V680S-D8KF68 286
V680S-D8KF68M 289
RF Tag Memory Capacities and Memory Types 292
RF Tag Memory Map 293
Chemical Resistance of the Reader/Writers and RF Tags 296
Degree of Protection 300
Differences in Address and Size Specifications between V680 and V680S Reader/Writers 302

Index 303

Revision History 306

Firmware Version Update History 307

MEMO

Section 1
Product Overview

Features	16
Application Flowchart	20
Product Specifications	27
Reader/Writer	27
Connector Cover (Slim Type)	31
RF Tag	32
Data Characteristics	44
Communications Range Specifications	44

Features

The integrated V680S-series Reader/Writers (V680S-HMD6□-PNT) perform communications with RF Tags according to commands from a host device.

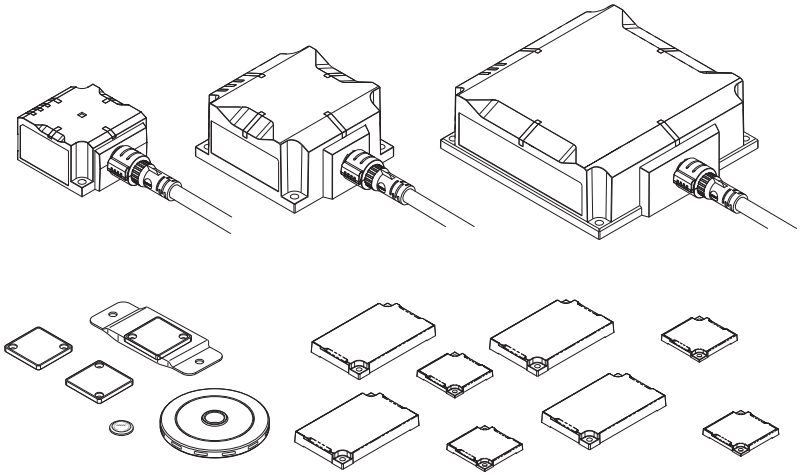

■ Integrated Structure

The controller, amplifier, and antenna are integrated into the Reader/Writer for a simple structure.

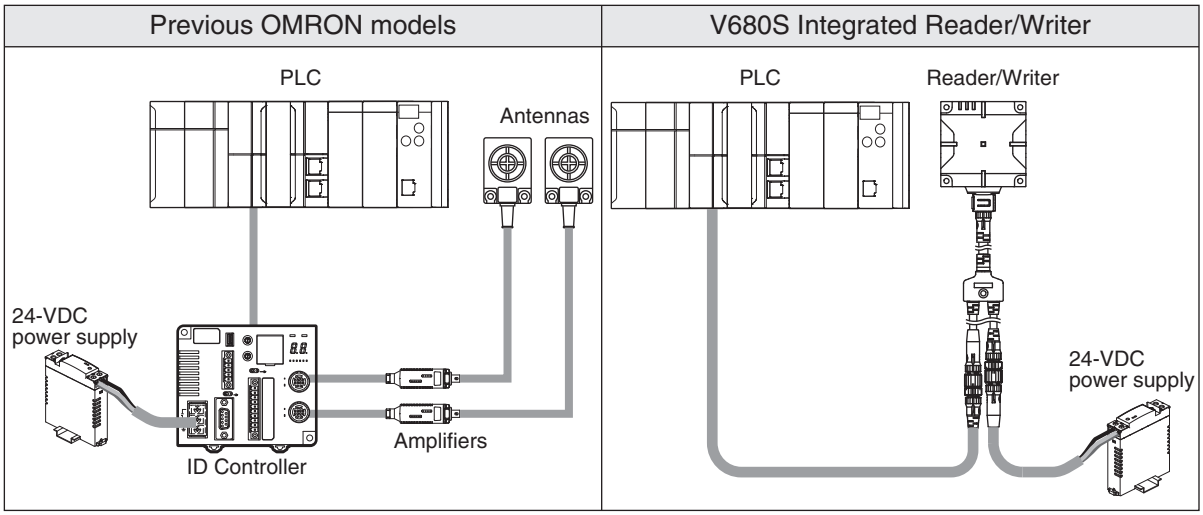

■ Simple Installation

The Reader/Writer is automatically set to the best parameters according to the RF Tags to achieve stable communications with more consistent communications and less omissions of RF Tags in the communications field.

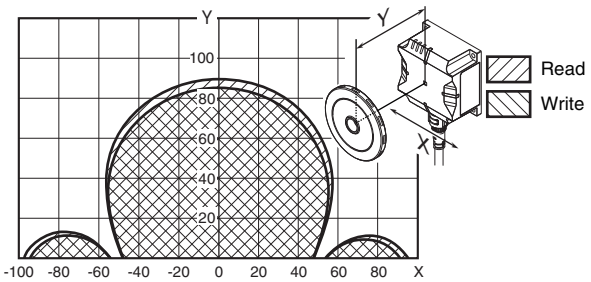

■ Stable Operation

When the Reader/Writer communicates with an RF Tag, it diagnoses the communications leeway and reports the result. You can check the communications leeway to appropriately install the Reader/Writer and RF Tags to achieve stable operation of your OMRON RFID System.

For details, refer to *Using Communication Diagnostic and the RF Analyzer* in *Section 6 Functions*.
p.118

If you use the RFID System under installation conditions that provide a high communications leeway, you can reduce communications troubles during system operation and achieve stable line operation.

Area of stable communications Area of unstable communications 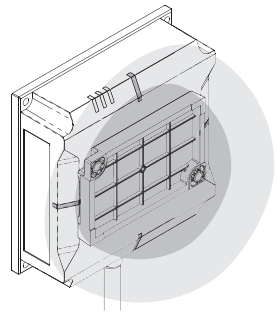	Area of stable communications Area of unstable communications 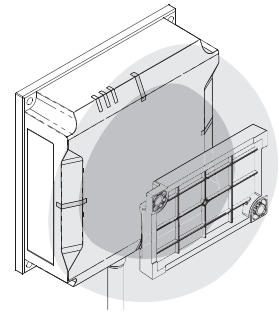	Area of stable communications Area of unstable communications 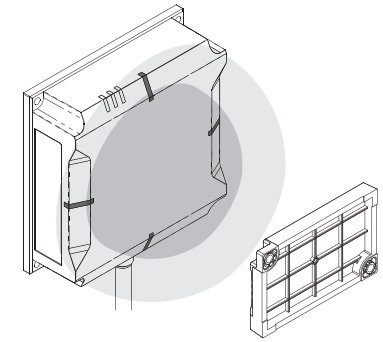
Operation Indicator lights green	Operation Indicator lights yellow	Operation Indicator lights red

■ Simple Connection with PROFINET

The Reader/Writer communicates with the host device through PROFINET. PROFINET is an industrial network that uses the PROFIBUS DP protocol on industrial Ethernet (100 Mbps, full duplex). The specifications are open standards managed by PI (PROFIBUS & PROFINET International). PROFINET is used by a wide range of industrial devices.

Because PROFINET uses standard Ethernet technology, various general-purpose Ethernet devices can be used in the network. You can easily increase the number of Reader/Writers by using a Switching Hub.

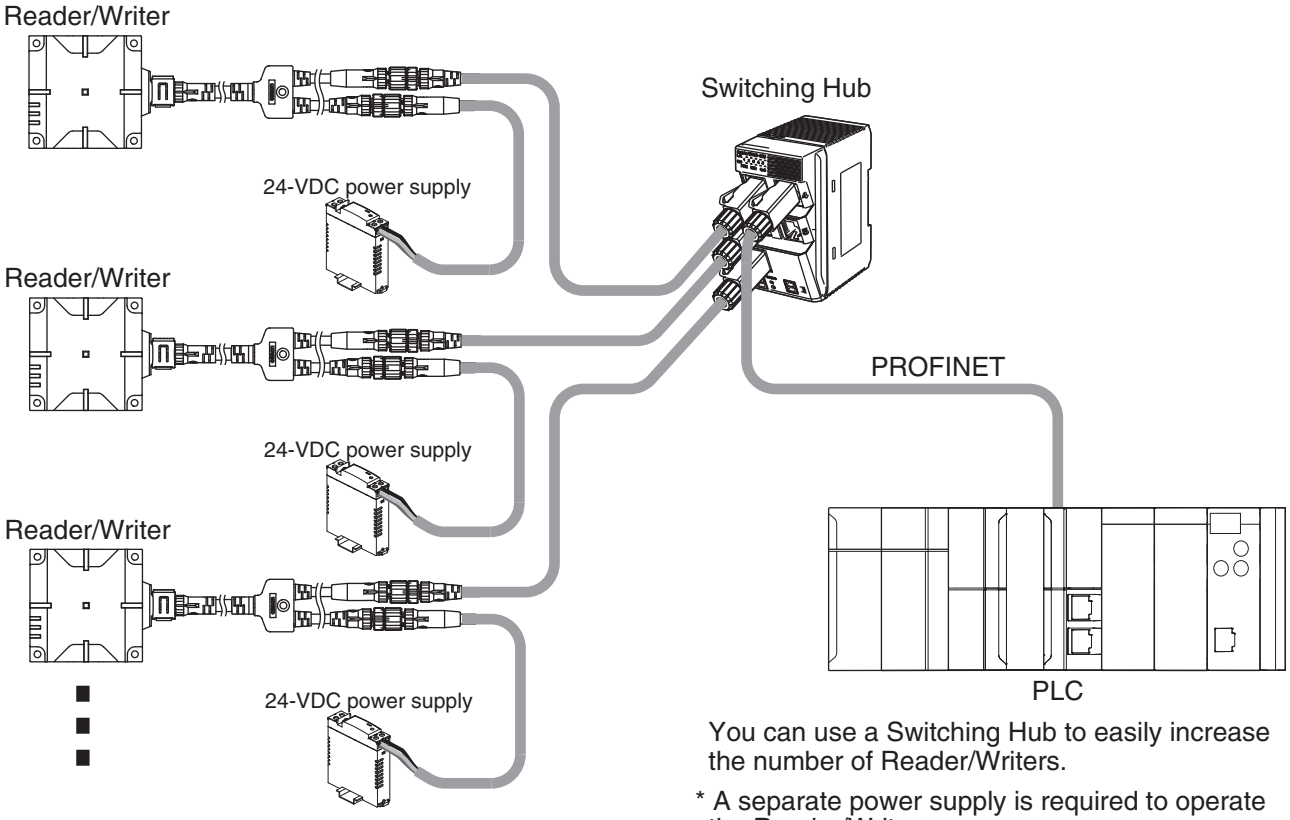

You can use a Switching Hub to easily increase the number of Reader/Writers.

* A separate power supply is required to operate the Reader/Writers.

CHECK!

To connect more than one Reader/Writer, all devices must be set to a unique IP address.

There are two PROFINET standards: PROFINET IO and PROFINET CBA. The Reader/Writers are applicable to a PROFINET IO network because communications for I/O data is performed between a controller and devices. The Reader/Writers use RT (realtime) communications for cyclic data communications with PROFINET IO. Conformance class A is supported along with the basic functions of RT communications.

The functions below are defined in Class A.

Function	Overview
Cyclic data exchange	Real-time data communication between the I/O controller and I/O devices at determined cycles. Set by I/O data CR.
Acyclic parameter data / device identification	Used for parameter settings, I/O device configuration, and reading of device information. Set by record data CR.
Device/network diagnosis	Communication for the purpose of sending alarms and statuses from I/O devices to the I/O controller. Set by Alarm CR.

■ Easy Operation

A Web server is provided so that you can easily perform setup and status monitoring by connecting to a computer, without the need for any special software.

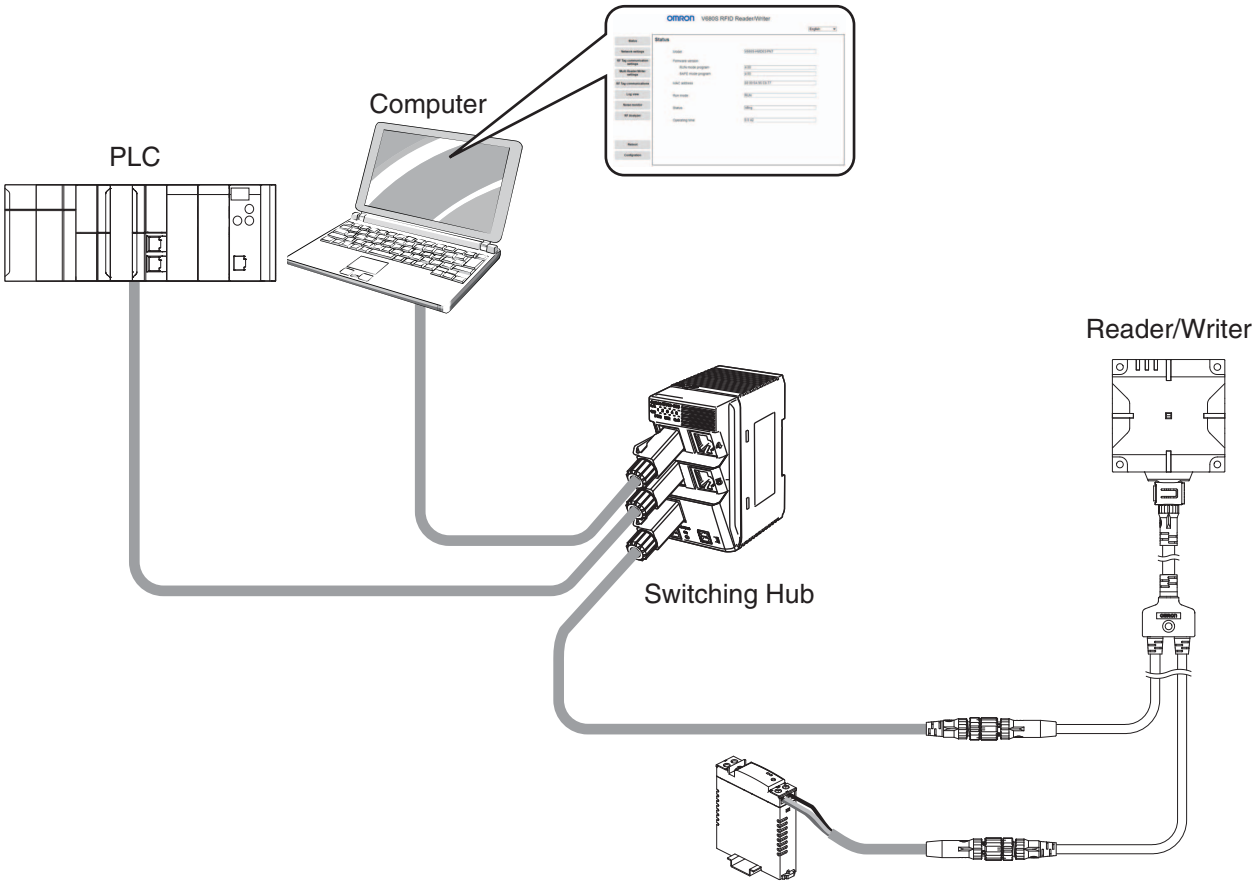

You can connect a computer to the Switching Hub to easily set up the Reader/Writers and check the status of the Reader/Writers.

Application Flowchart

A simple application flowchart is described below. For correct application methods and details, refer to the reference page or section given for each step.

Preparations

Checking the Installation Environment

p.248

CHECK!

Refer to Reader/Writer Installation Precautions in Section 11 Appendices to confirm the conditions under which the RFID System will not be influenced by surrounding metal on the Reader/Writer or mutual interference between Reader/Writers.

Installation

p.68

Install the Reader/Writer with four M4 screws.
V680S-HMD63-PNT: Use two screws.
V680S-HMD64-PNT/-HMD66-PNT: Use four screws.

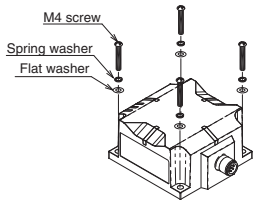

Connections and Wiring

p.80

Insert the Power Cable into the power supply connector on the Reader/Writer (M12 A-Coding, female) and turn the cable connector on the Reader/Writer end clockwise to lock it in place.

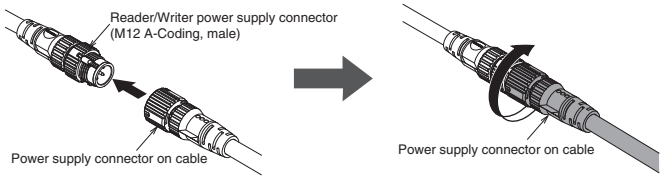

Insert the Ethernet Cable into the Ethernet connector on the Reader/Writer (M12 D-Coding, male) and turn the cable connector on the Reader/Writer end clockwise to lock it in place.

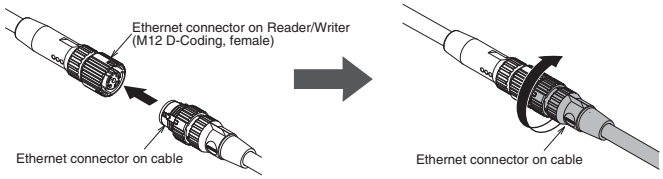

Mount the Branch Cable with one M4 screw.
Recommended tightening torque: 0.39 to 0.49 N·m

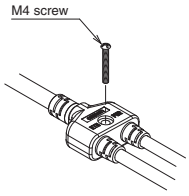

Connect the Power Cable to a 24-VDC power supply.
Connect the Ethernet Cable to the host device (PLC) or Switching Hub.

Communications Preparations

Setting Reader/Writer Communications Conditions

p.85

he default network settings for the Reader/Writer are listed in the following table.

IP address	192.168.1.200 (fixed settings)
Subnet mask	255.255.255.0
Default gateway	192.168.1.254
Port number for Web browser	7090

Change the network settings of the host device to match those of the Reader/Writer.
Host Device Setting Example

IP address: 192.168.1.100

Subnet mask: 255.255.255.0

Trial Operation

Communications Test with Host Device

p.186

Start a Web browser (e.g., Internet Explorer, Microsoft Edge, Google Chrome) on the host computer, enter **http://192.168.1.200/** in the address box, and press the Enter Key. Communications will be possible if the following view appears.

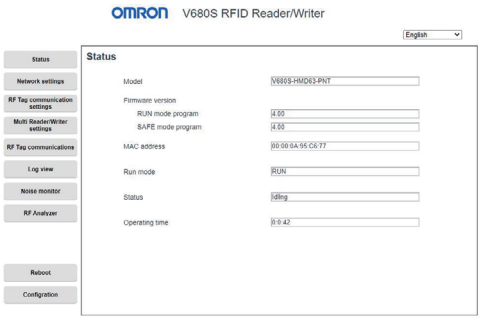

Using Communication Diagnostic to Check Communications Leeway
p.118

1. Connect the Ethernet cable, turn ON the power supply to the Reader/Writer, and then start a Web browser on a computer.

2. Specify the IP address of the Reader/Writer in the address field of the Web browser.

Enter **http://192.168.1.200/** if you are using the default IP address.

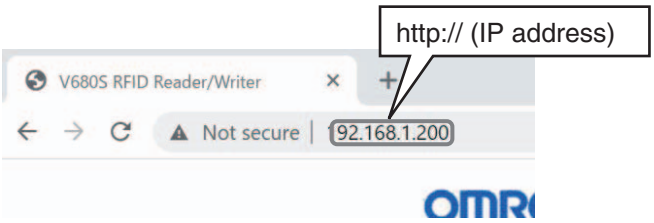

3. The Communications Setting View will be displayed.

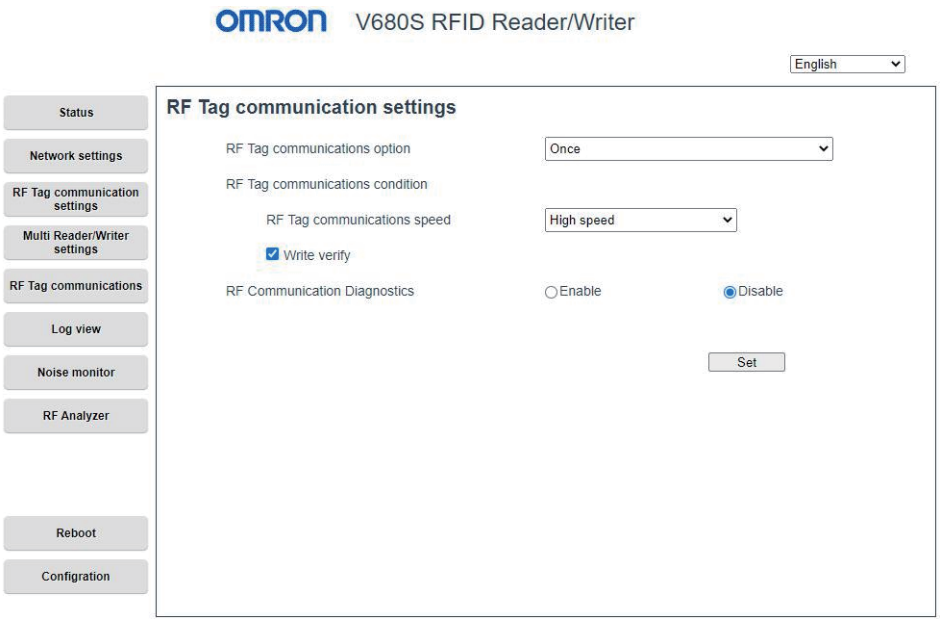

Using the RF Analyzer to Check the Results of Communication Diagnostic

p.122

1. Display the RF Analyzer View.

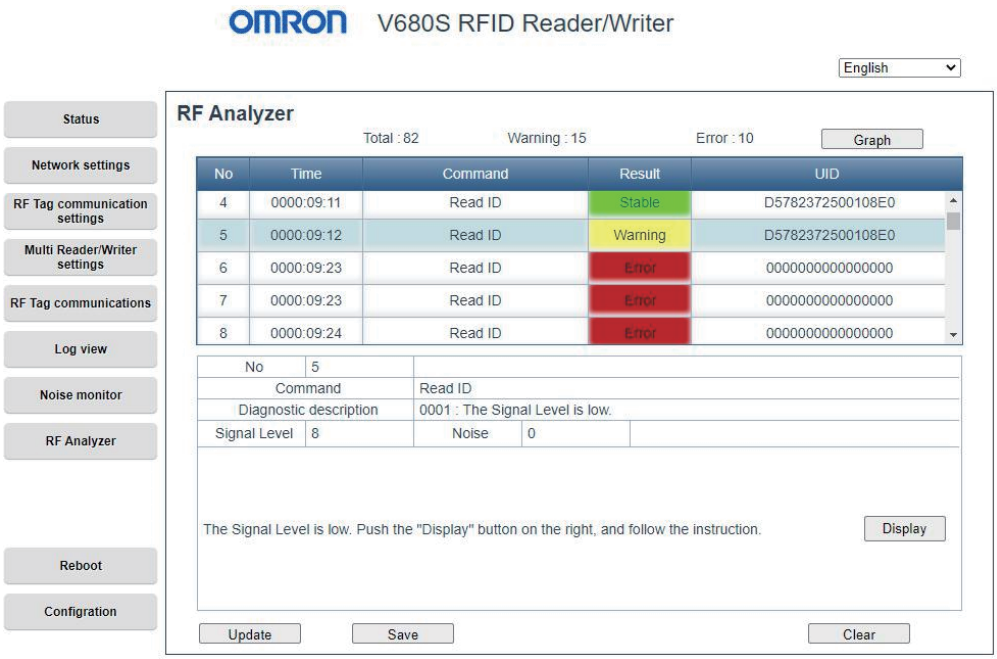

Assumed

2. Click the **Display** Button in the Details column and follow the guidance to check the assumed causes and corrections.

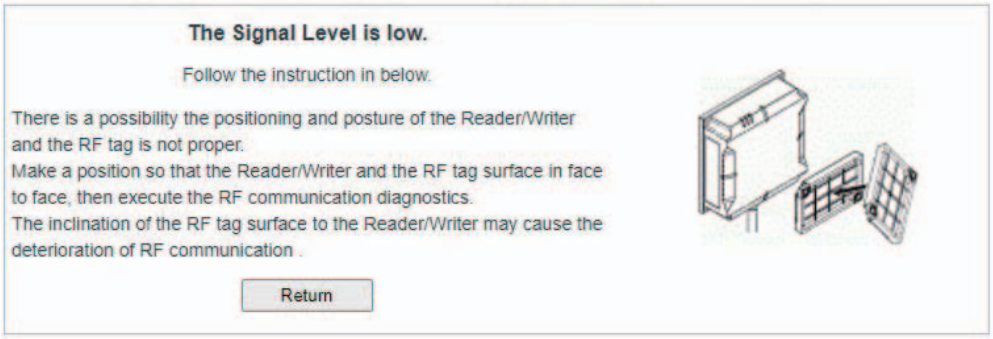

3. In this example, the position of the Tag is corrected according to the guidance.

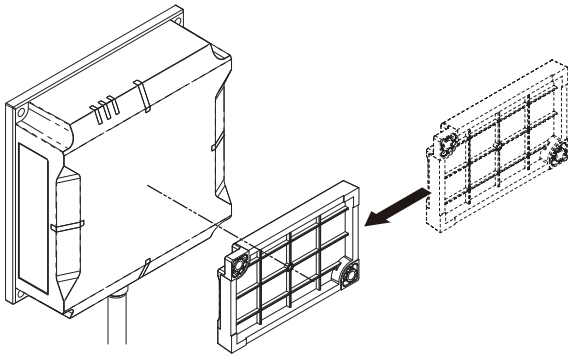

4. You can check the graph display to check quantitative information on the degree of instability.

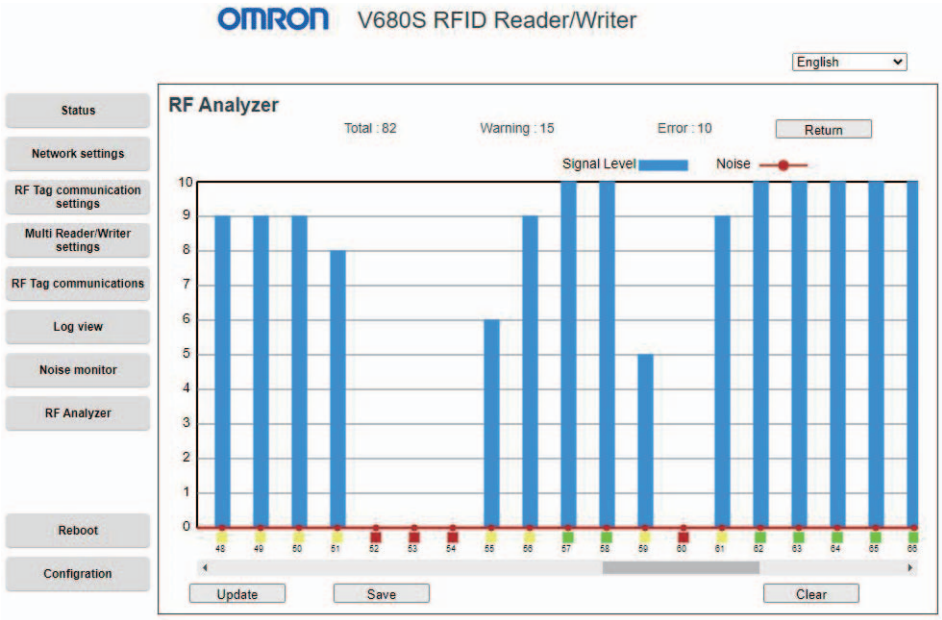

When you are finished, perform the step to communicate with the RF Tag again and check to see if stable communications have been achieved.

RF Tag Communications

Communications with RF Tags for Commands from the Host Device Using Cyclic Data Exchanges
p.151

The Reader/Writer can perform various types of communications with RF Tags.

Communications command name	Description	Page
READ DATA	Reads data from an RF Tag in the communications field.	p.155
WRITE DATA	Writes data to an RF Tag in the communications field.	p.156
READ ID	Reads the ID code from an RF Tag in the communications field.	p.154
COPY DATA	Uses two Reader/Writers to copy data from the memory of an RF Tag in the communications field of one Reader/Writer (A) to the memory of the RF Tag in the communications field of another Reader/Writer (B).	p.161
DATA FILL	Writes the specified data to the specified number of words beginning from the specified start address. The specifications are made in the command.	p.158
LOCK	This command locks the specified memory in the RF Tag. It will no longer be possible to write data to the locked memory. The lock cannot be released.	p.157
RF TAG OVERWRITE COUNT CONTROL	Used to manage the number of times data is written to an RF Tag. You can use this command for RF Tags with EEPROM memory.	p.159
RESTORE DATA	This command reads the restore information from the Reader/Writer.	p.160

If you Encounter a Problem...

Troubleshooting

p.151 Error Codes

p.62 Operation Indicators

p.220 Troubleshooting Flowcharts

Product Specifications

Reader/Writer

■ General Specifications

Item / Model	V680S-HMD63-PNT	V680S-HMD64-PNT	V680S-HMD66-PNT
Compliance standards	ISO/IEC 18000-3 (15693)		
Frequency	13.56 MHz		
Dimensions	50 × 50 × 30 mm (W × H × D, excluding protruding parts and cables)	75 × 75 × 40 mm (W × H × D, excluding protruding parts and cables)	120 × 120 × 40 mm (W × H × D, excluding protruding parts and cables)
Power supply voltage	24 VDC (-15% to +10%)		
Consumption current	0.2A max.		
Ambient operating temperature	-10 to 55°C (with no icing)		
Ambient operating humidity	25% to 85% (with no condensation)		
Ambient storage temperature	-25 to 70°C (with no icing)		
Ambient storage humidity	25% to 85% (with no condensation)		
Insulation resistance	20 MΩ min. (at 500 VDC) between cable terminals and case		
Dielectric strength	1,000 VAC, 50/60 Hz for 1 min between cable terminals and case		
Vibration resistance	No abnormality after application of 10 to 500 Hz, 1.5-mm double amplitude, acceleration: 100 m/s², 10 sweeps in each of 3 axis directions (up/down, left/right, and forward/backward) for 11 minutes each		
Shock resistance	No abnormality after application of 500 m/s², 3 times each in 6 directions (Total: 18 times)		
Degree of protection	IP67 (IEC 60529:2001) Oil resistance equivalent to IP67F (JIS C 0920:2003, Appendix 1) See Note 1		
Materials	Case: PBT resin, Filled resin: Urethane resin		
Mass	Approx. 240 g	Approx. 390 g	Approx. 760 g
Installation method	Reader/Writer body: Two M4 screws See Note 2 Cable branching section: One M4 screw	Reader/Writer body: Four M4 screws See Note 2 Cable branching section: One M4 screw	
Host communications interface	Ethernet 10BASE-T/100BASE-TX		
Host device communications protocol	PROFINET		
Accessories	Instruction Sheet Copy of EC Self Declaration IP address label		

Note 1. Oil resistance has been tested using a specific oil as defined in the OMRON test method.
Note 2. Use a screw of 12 mm or more in length.

■ Dimensions

▪ V680S-HMD63-PNT

(Unit: mm)

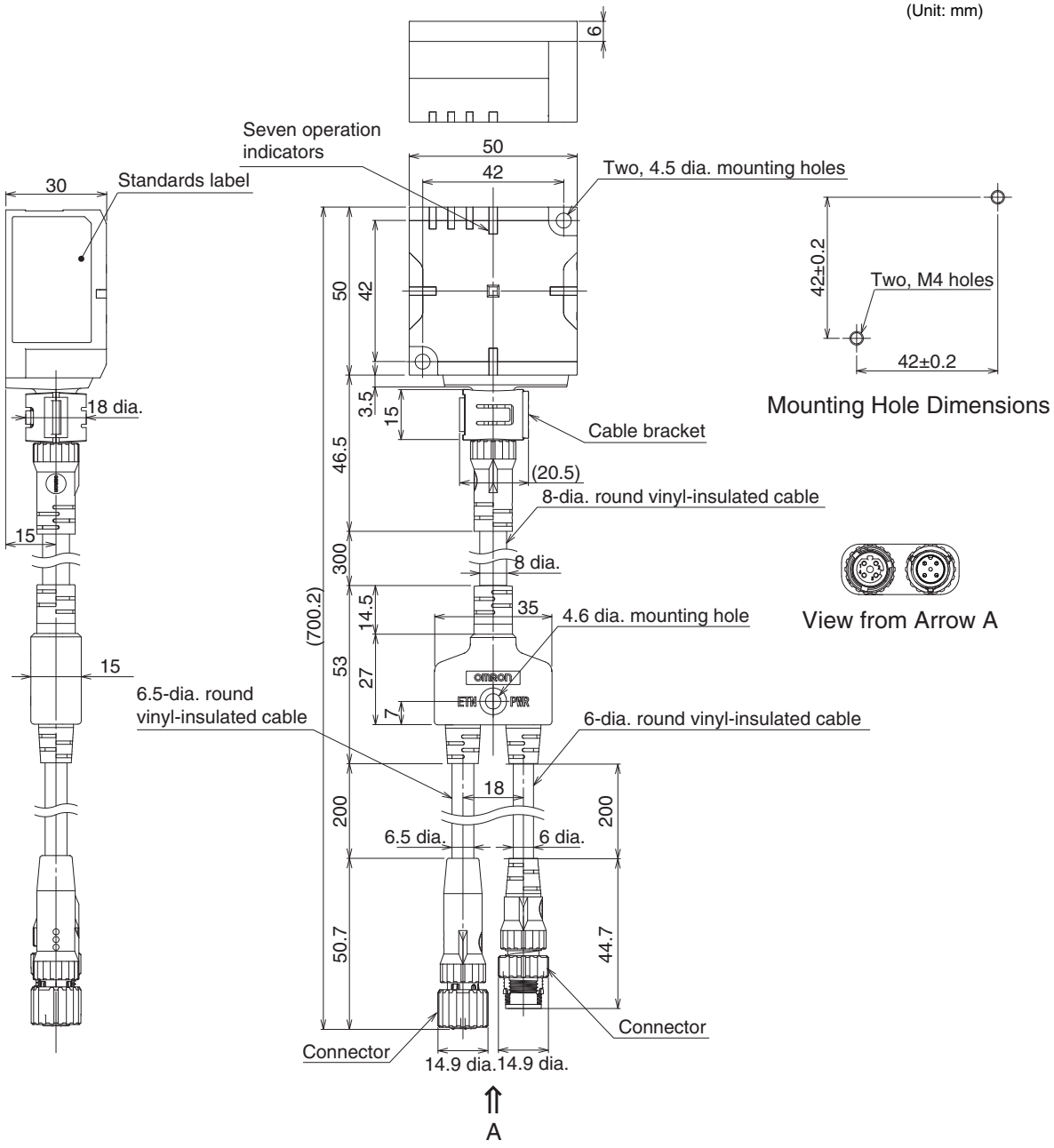

▪ V680S-HMD64-PNT

(Unit: mm)

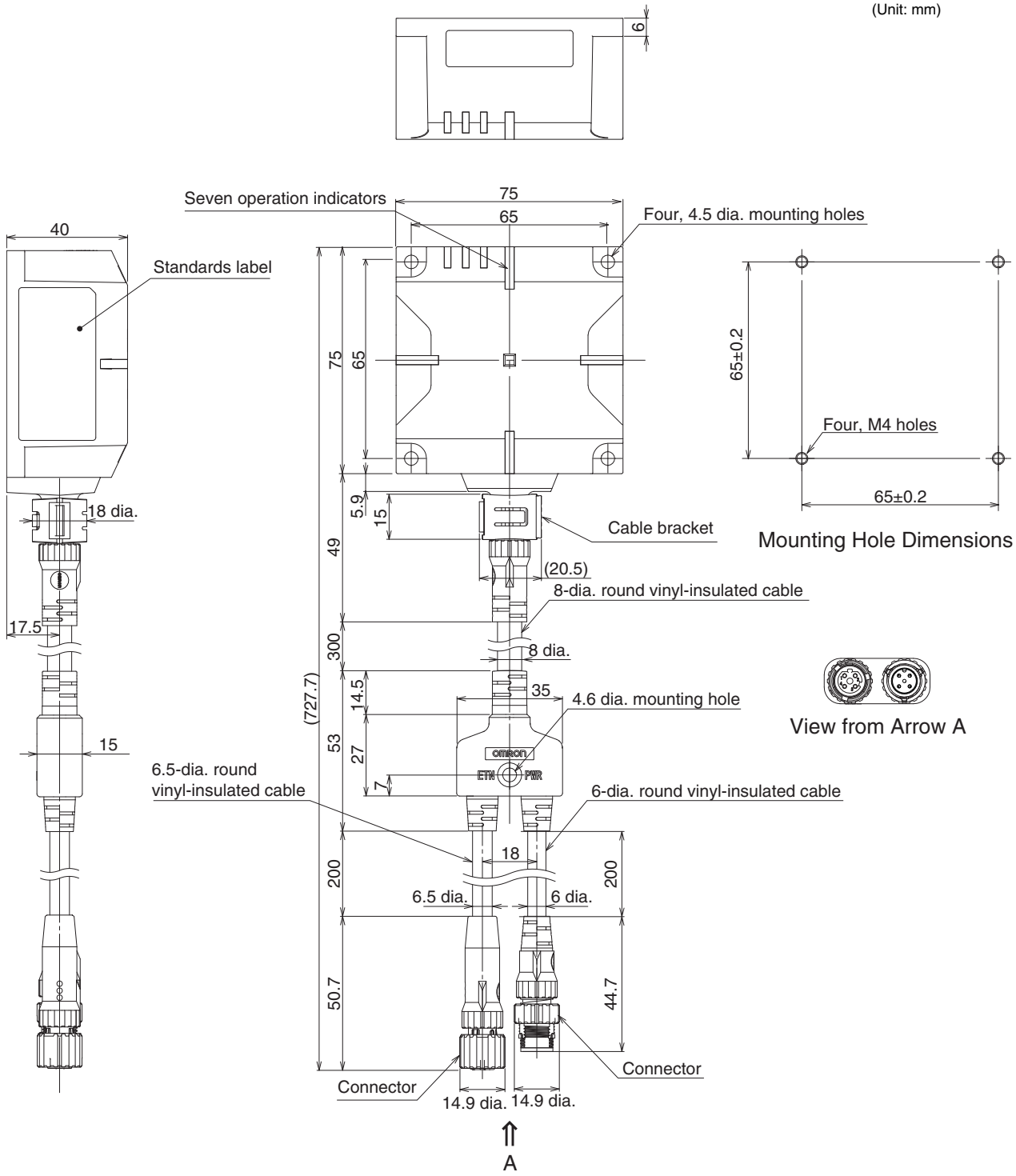

▪ V680S-HMD66-PNT

(Unit: mm)

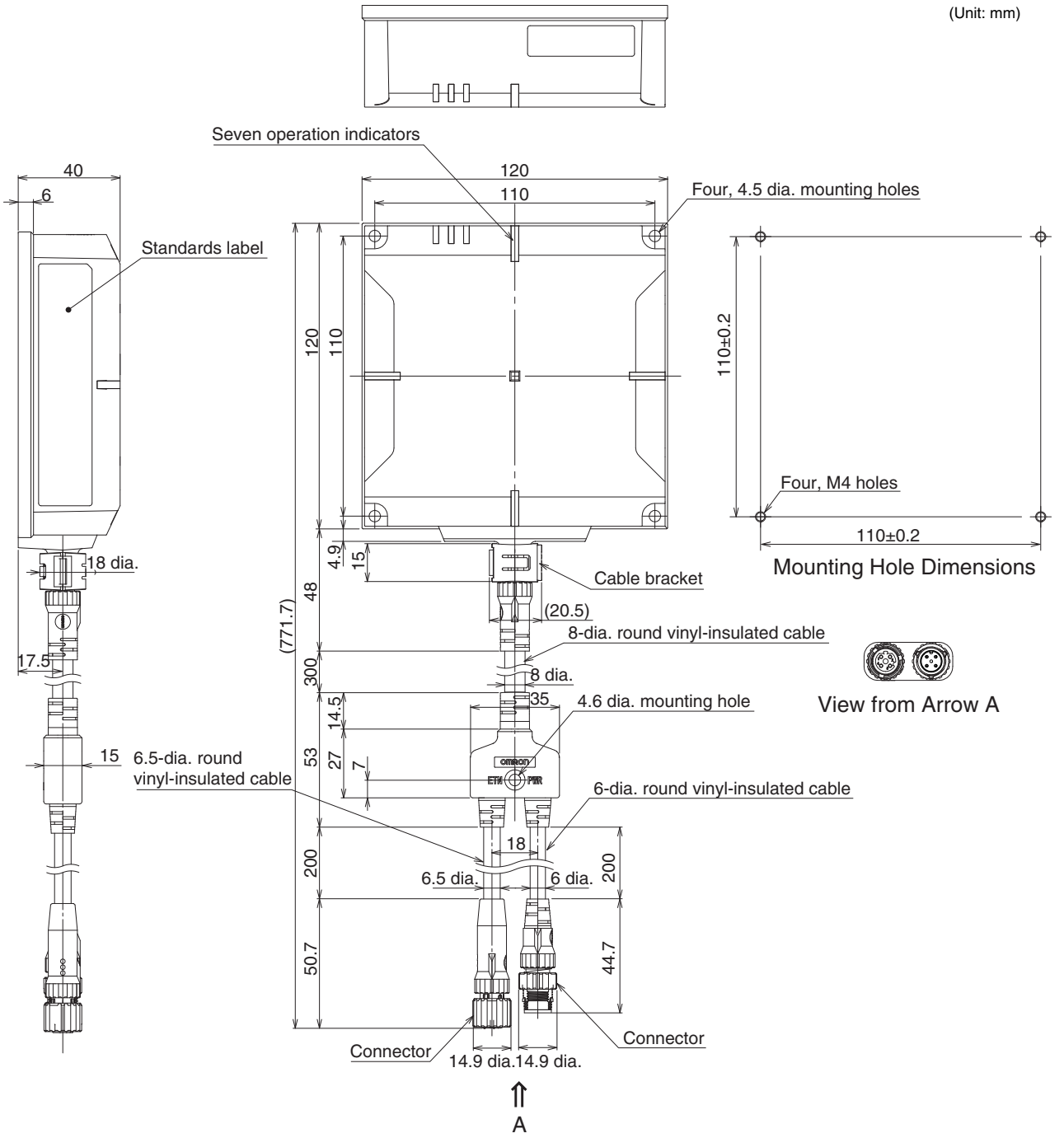

Connector Cover (Slim Type)

■ General Specifications

Item / Model	V680S-A63-S	V680S-A64-S
Ambient operating temperature	-10 to 55°C (with no icing)	
Ambient operating humidity	25% to 85% (with no condensation)	
Ambient storage temperature	-25 to 70°C (with no icing)	
Ambient storage humidity	25% to 85% (with no condensation)	
Materials	PBT resin	
Installation method	Fixing screws in two locations*1	

*1. In addition to the reader/writer mounting holes, two mounting holes are required for the connector cover.

■ Dimensions

▪ V680S-A63-S

(Unit: mm)

Mount Hole Dimensions

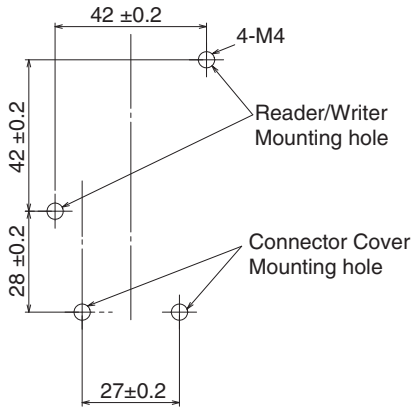

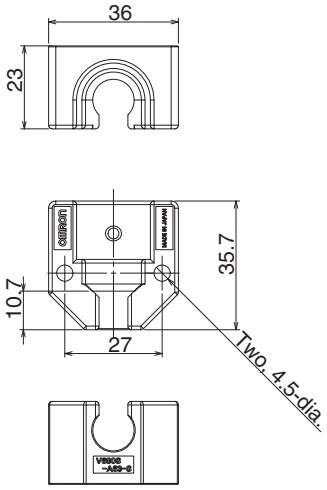

V680S-A64

(Unit: mm)

Mounting Hole Dimensions
(V680S-HMD64-PNT)

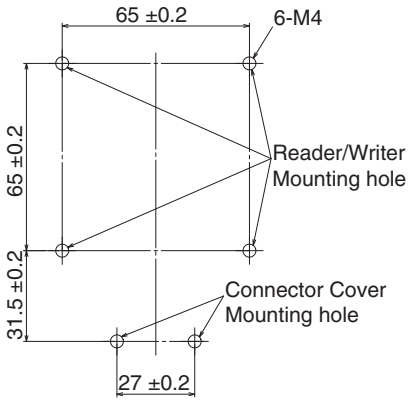

Mounting Hole Dimensions
(V680S-HMD66-PNT)

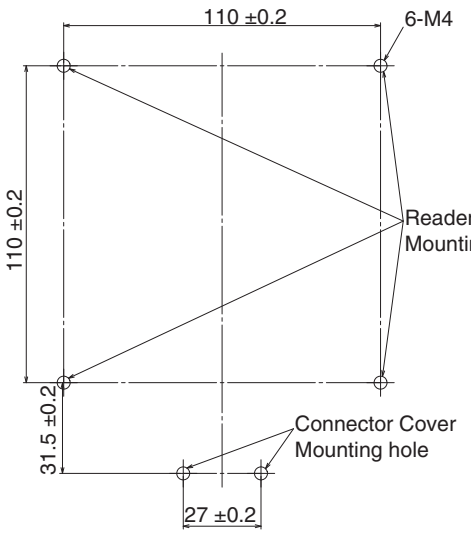

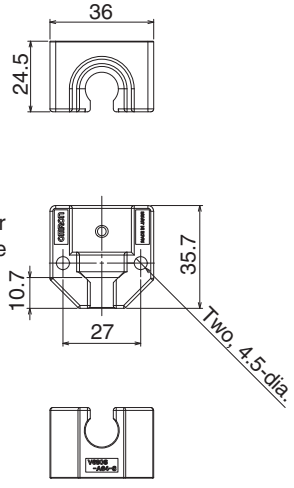

RF Tag

■ V680-D1KP54T

▪ General Specifications

Item / Model	V680-D1KP54T
Compliance standards	ISO/IEC 18000-3 (15693)
Memory capacity	1,000 bytes (user area)
Memory type	EEPROM
Data retention	10 years after writing (85°C or less), 0.5 years after writing (85 to 125°C) Total data retention at high temperatures exceeding 125°C is 10 hours See Note 1.
Write endurance	100,000 writes for each block (25°C)
Ambient operating temperature	-25 to 85°C (with no icing)
Ambient operating humidity	35% to 95%
Ambient storage temperature	-40 to 125°C (with no icing)
Ambient storage humidity	35% to 95%
Degree of protection	IP67 (IEC 60529:2001) Oil resistance equivalent to IP67G (JIS C 0920:2003, Appendix 1) See Note 2.
Vibration resistance	No abnormality after application of 10 to 2,000 Hz, 1.5-mm double amplitude, acceleration: 150 m/s², 10 sweeps each in X, Y, and Z directions for 15 minutes each
Shock resistance	No abnormality after application of 500 m/s², 3 times each in X, Y, and Z directions (Total: 18 times)
Dimensions	20 dia. × 2.7 mm
Materials	PPS resin
Weight	Approx. 2 g
Metal countermeasures	None

Note 1. After storing RF Tags at high temperatures, rewrite the data even if changes are not required. High temperatures are those between 125 and 180°C.

2. Oil resistance has been tested using a specific oil as defined in the OMRON test method.

▪ Dimensions

(Unit: mm)

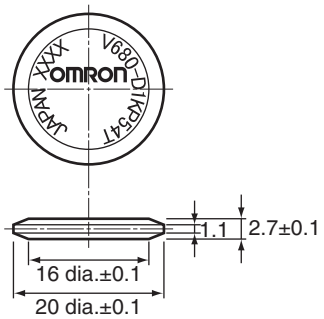

Case material	PPS resin

CHECK! The V680-D1KP54T RF Tag can be placed in the Attachment in either direction. The direction does not affect operation.

CHECK! The ID code is written in the memory of the RF Tag and may be affected by data retention characteristics at high temperatures. Take suitable precautions when using the READ ID command for RF Tags operating at high temperatures.

CHECK! You cannot use FIFO Repeat communications.

V700-A80 Attachment

(Unit: mm)

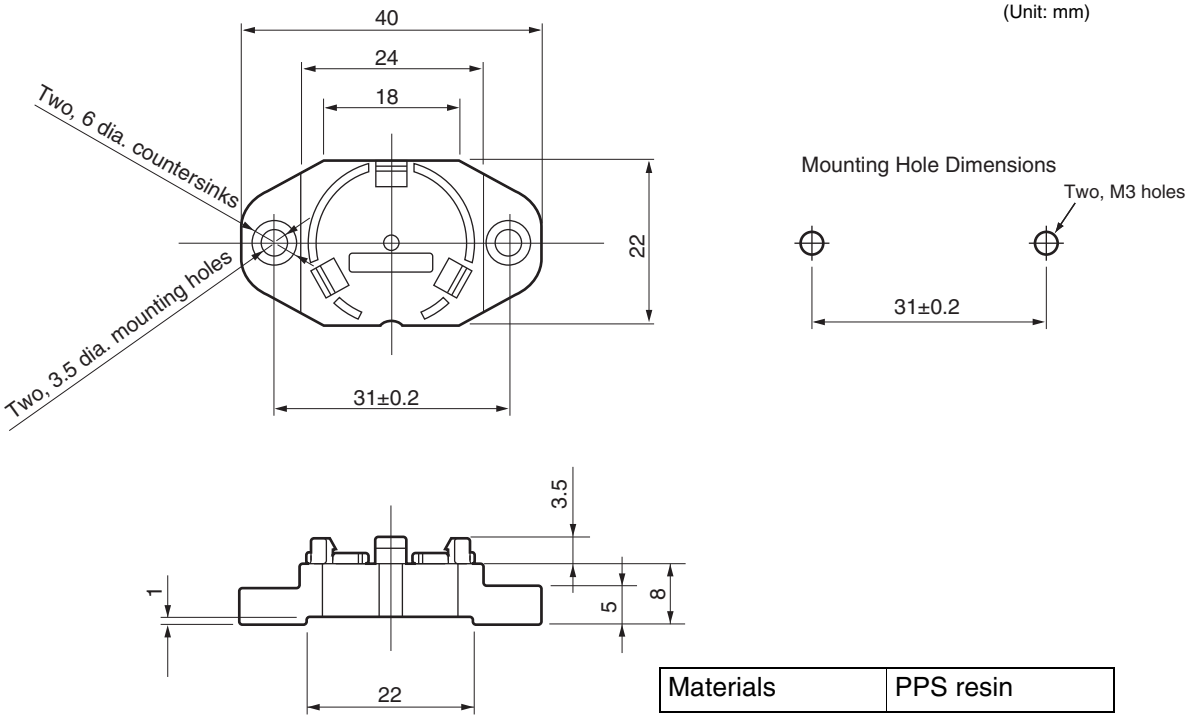

Materials	PPS resin

▪ RF Tag Heat Resistance

″ Storing RF Tags under high temperatures or under heat cycles will adversely affect the performance of the internal parts and the service life of the RF Tags.

An LTPD of 10% was used for evaluation of RF Tags that reached the end of their service life after testing under the following test conditions.

Heat cycle:	1,000 cycles of 30 minutes each between -10 and 150°C. No failures occurred in 22 samples.
	200 cycles of 30 minutes each between -10 and 180°C. No failures occurred in 22 samples.
High-temperature storage:	1,000 hours at 150°C. No failures occurred in 22 samples.
	200 hours at 180°C. No failures occurred in 22 samples.

CHECK!

LTPD: Lot Tolerance Percent Defective
ver limit of the malfunction rate for lots to be considered unacceptable during reliability testing.

■ V680-D1KP66T/-D1KP66MT

▪ General Specifications

Item / Model	V680-D1KP66T	V680-D1KP66MT
Compliance standards	ISO/IEC 18000-3 (15693)	
Memory capacity	1,000 bytes (user area)	
Memory type	EEPROM	
Data retention	10 years after writing (85°C or less), 0.5 years after writing (85 to 125°C) Total data retention at high temperatures exceeding 125°C is 10 hours See Note 1.	
Write endurance	100,000 writes for each block (25°C)	
Ambient operating temperature	-25 to 85°C (with no icing)	
Ambient operating humidity	35% to 95%	
Ambient storage temperature	-40 to 125°C (with no icing)	
Ambient storage humidity	35% to 95%	
Degree of protection	IP68 (IEC 60529:2001) Oil resistance equivalent to IP67G (JIS C 0920:2003, Appendix 1) See Note 2.	
Vibration resistance	No abnormality after application of 10 to 2,000 Hz, 1.5-mm double amplitude, acceleration: 150 m/s², 10 sweeps each in X, Y, and Z directions for 15 minutes each	
Shock resistance	No abnormality after application of 500 m/s², 3 times each in X, Y, and Z directions (Total: 18 times)	
Dimensions	34 × 34 × 3.5 mm (W × H × D)	
Materials	PPS resin	
Weight	Approx. 6 g	Approx. 7.5 g
Metal countermeasures	None	Provided

Note 1. After storing RF Tags at high temperatures, rewrite the data even if changes are not required. High temperatures are those between 125 and 180°C.
2. Oil resistance has been tested using a specific oil as defined in the OMRON test method.

The V680-D1KP66MT must be mounted on a metallic surface. The markings on the V680-D1KP66T and V680-D1KP66MT are shown below.

●V680-D1KP66MT

●V680-D1KP66T

CHECK! The marked surface is the communications surface. When mounting the RF Tag, face the marked surface toward the Reader/Writer.

CHECK! The ID code is written in the memory of the RF Tag and may be affected by data retention characteristics at high temperatures. Take suitable precautions when using the READ ID command for RF Tags operating at high temperatures.

CHECK! You cannot use FIFO Repeat communications.

▪ Dimensions

V680-D1KP66T/-D1KP66MT

(Unit: mm)

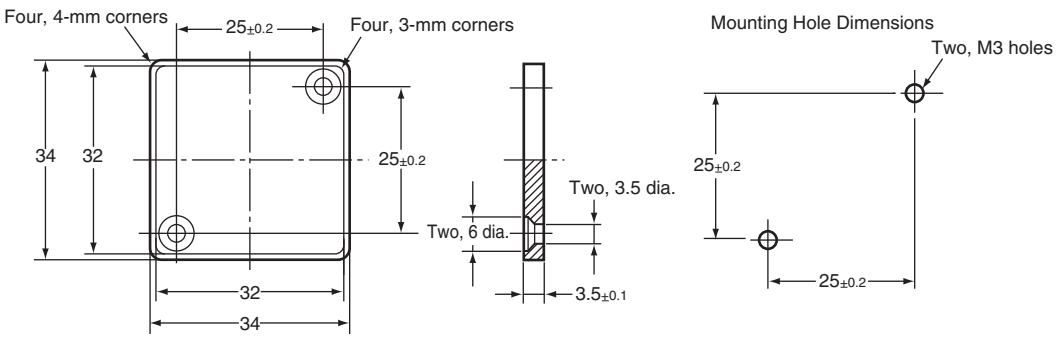

Case material	PPS resin

V600-A86 Attachment

(Unit: mm)

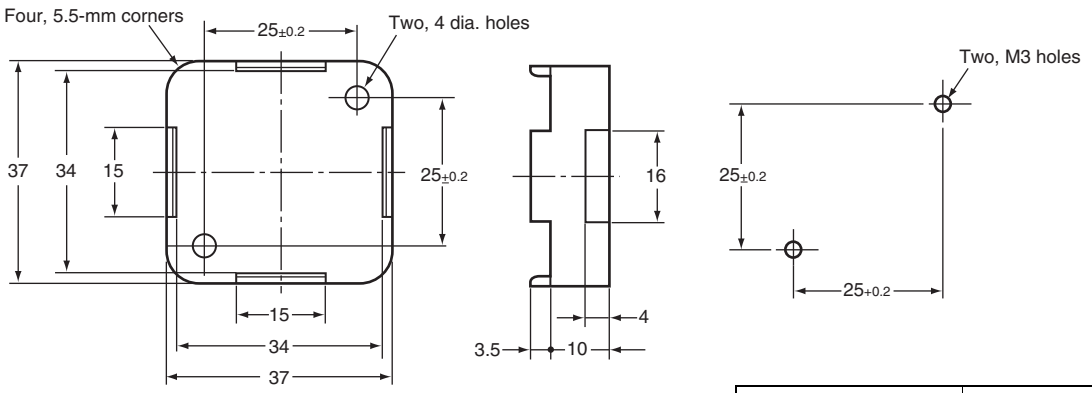

Case material	PPS resin

▪ RF Tag Heat Resistance

″ Storing RF Tags under high temperatures or under heat cycles will adversely affect the performance of the internal parts and the service life of the RF Tags.

An LTPD of 10% was used for evaluation of RF Tags that reached the end of their service life after testing under the following test conditions.

Heat cycle:	1,000 cycles of 30 minutes each between -10 and 150°C. No failures occurred in 22 samples.
	200 cycles of 30 minutes each between -10 and 180°C. No failures occurred in 22 samples.
High-temperature storage:	1,000 hours at 150°C. No failures occurred in 22 samples.
	200 hours at 180°C. No failures occurred in 22 samples.

CHECK!

LTPD: Lot Tolerance Percent Defective

ver limit of the malfunction rate for lots to be considered unacceptable during reliability testing.

■ V680-D1KP66T-SP

▪ General Specifications

Item	Specification
Compliance standards	ISO/IEC 18000-3 (15693)
Memory capacity	1,000 bytes
Memory type	EEPROM
Data retention	10 years (85°C or less)
Write endurance	100,000 writes for each block (25°C)
Ambient operating temperature	-25 to 70°C (with no icing)
Ambient operating humidity	35% to 95% (with no condensation)
Ambient storage temperature	-40 to 110°C (with no icing)
Ambient storage humidity	35% to 95% (with no condensation)
Vibration resistance	10 to 2,000 Hz, 1.5-mm double amplitude, acceleration: 150 m/s², 10 sweeps each in 3 directions for 15 minutes each
Shock resistance	No abnormality after application of 500 m/s², 3 times each in X, Y, and Z directions (Total: 18 times)
Dimensions	95 × 36.5 × 6.5 mm (W × H × D, excluding protruding parts)
Degree of protection	IP67
Materials	Exterior: PFA fluororesin RF Tag filling: PPS resin
Weight	Approx. 20 g
Installation method	Two M5 screws
Metal countermeasures	None

▪ Dimensions

(Unit: mm)

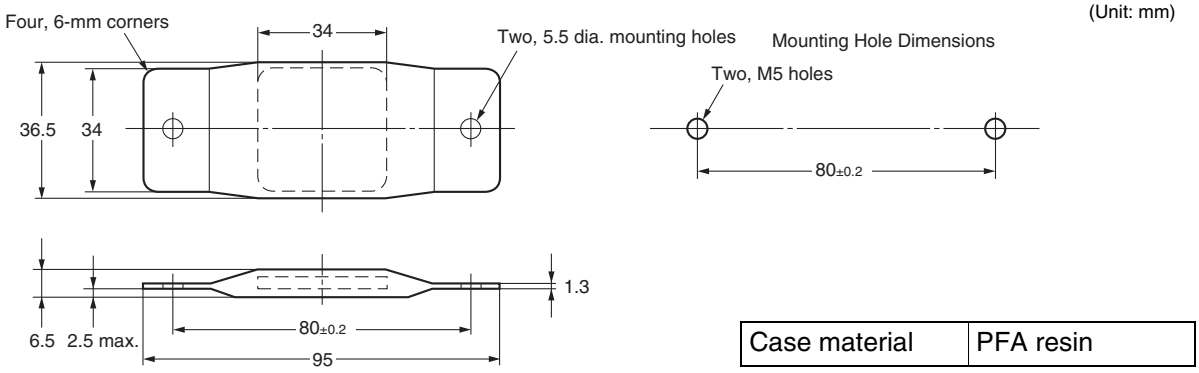

Case material	PFA resin

CHECK! The marked surface is the communications surface. When mounting the RF Tag, face the marked surface toward the Reader/Writer.

CHECK! You cannot use FIFO Repeat communications.

■ V680-D1KP58HTN

▪ General Specifications

Item / Model	V680-D1KP58HTN
Compliance standards	ISO/IEC 18000-3 (15693)
Memory capacity	1,000 bytes (user area)
Memory type	EEPROM
Data retention	10 years after writing (85°C or less), 0.5 years after writing (85 to 125°C) Total data retention at high temperatures exceeding 125°C is 10 hours See Note.1
Write endurance	100,000 writes for each block (25°C)
Ambient operating temperature	-25 to 85°C (with no icing)
Ambient operating humidity	No restrictions.
Ambient storage temperature	-40 to 250°C (with no icing) (Data retention: -40 to 125°C)
Ambient storage humidity	No restrictions.
Degree of protection	IP67 (IEC 60529:2001) Oil resistance equivalent to IP67G (JIS C 0920:2003, Appendix 1) See Note.2
Vibration resistance	No abnormality after application of 10 to 2,000 Hz, 1.5-mm double amplitude, acceleration: 150 m/s², 10 sweeps each in X, Y, and Z directions for 15 minutes each
Shock resistance	No abnormality after application of 500 m/s², 3 times each in X, Y, and Z directions (Total: 18 times)
Dimensions	80 dia. × 10 mm
Materials	PPS resin
Weight	Approx. 70 g

Note1. After storing RF Tags at high temperatures, rewrite the data even if changes are not required. High temperatures are those between 125 and 250°C.
2. Oil resistance has been tested using a specific oil as defined in the OMRON test method.

▪ Dimensions

V680-D1KP58HTN

(Unit: mm)

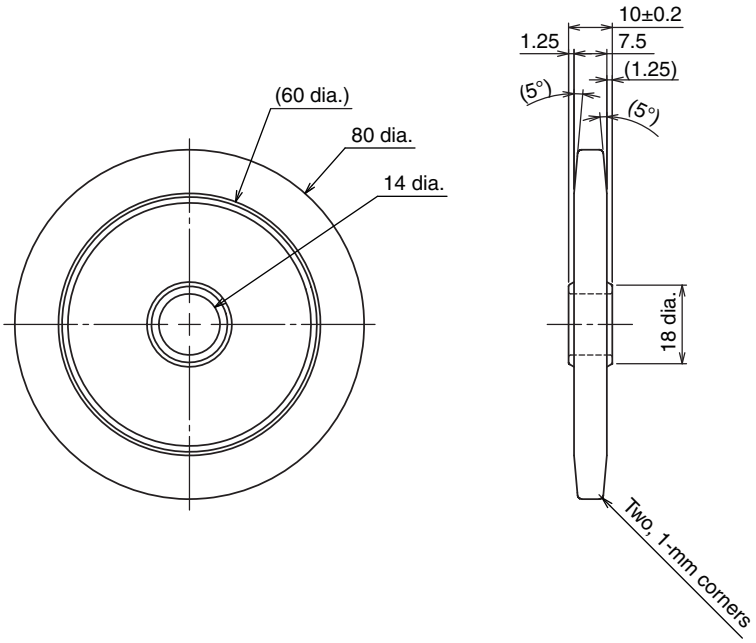

Case material	PPS resin

CHECK!

The RF Tag can be placed in the Attachment in either direction. The direction does not affect operation.

V680-A80 Attachment

This Attachment is used to hold V680-D1KP58HTN ID Tags.

Applicable model: V680-D1KP58HTN

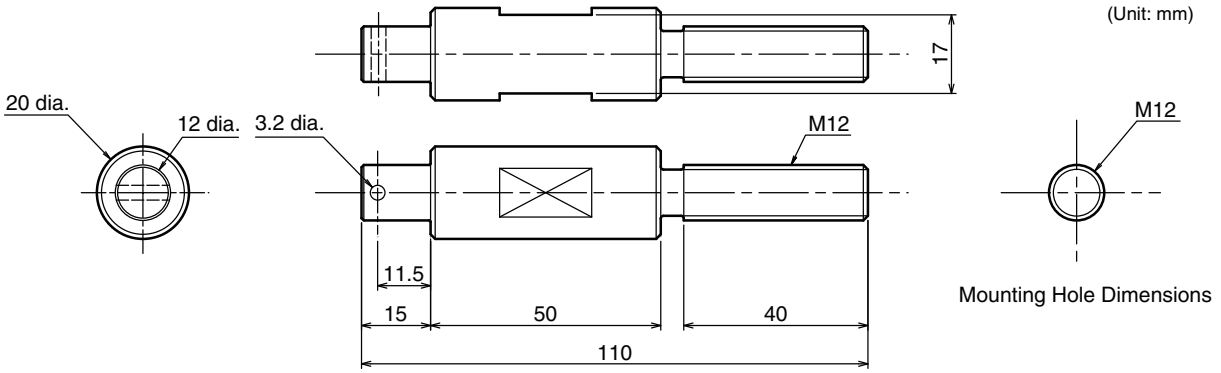

Accessories: 2 nuts (M12)
1 split pin (nominal dimensions: 3.2-mm dia. × 20-mm length)

▪ High-temperature Applications (V680-D1KP58HTN)

▪ Data Retention

″ Due to the characteristics of EEPROM, any data that is written to an RF Tag may be lost if it is used in a high-temperature environment that exceeds 125°C for a total of more than 10 hours. Always reset the data holding time before a total of 10 hours is reached.

″ Communications between the Reader/Writer and RF Tags may fail in high-temperature environments of 85°C or higher. Do not perform communications between the Reader/Writer and RF Tag in a high-temperature environment of 85°C or higher.

″ Due to the characteristics of EEPROM, the UID (RF Tag ID code) may be lost if an RF Tag is used in a high-temperature environment that exceeds 125°C. Do not use commands that use the UID in high-temperature environments that exceed 125°C.

″ Do not use the ID READ command.

″ You cannot use FIFO Repeat communications.

← Total Usage Time

This section gives the total time that an RF Tag can be placed at high temperatures.

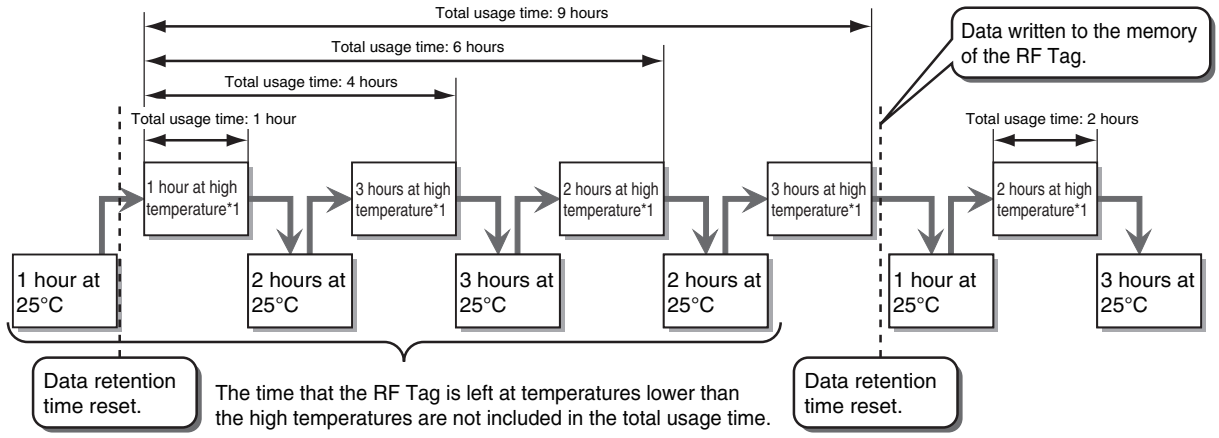

Fig. Conceptual Diagram of Resetting the Data Retention Time

*1 A “high temperature” is one between 125°C and 250°C.

▪ Data Retention Time Reset Procedure

Always use the following procedure to reset the data holding time before a total of 10 hours is reached.

When Using RF Tag Memory Addresses 0010 to 0015 hex

1. Read the data from RF Tag addresses 0010 to 0015 hex.

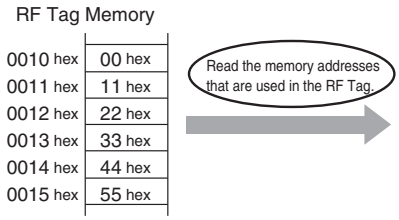

2. Write the read data to RF Tag memory addresses 0010 to 0015 hex.

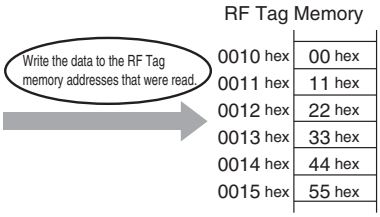

CHECK!

The data retention time is reset only for the RF Tag memory addresses that are written.
To reset the data retention time, write the same data to all of the memory addresses that are used in the RF Tag.

▪ Heat Resistance

Storing RF Tags under high temperatures or under heat cycles will adversely affect the performance of the internal parts and the service life of the RF Tags.

The RF Tag were placed in the following high temperatures and then evaluated in-house. It was confirmed that no problems occurred.

1) 2,000 cycles of 30 minutes each between room temperature and 200°C

2) 500 hours at 250°C

■ V680S-D2KF67/-D2KF67M/-D8KF67/-D8KF67M

▪ General Specifications

Item / Model	V680S-D2KF67	V680S-D2KF67M	V680S-D8KF67	V680S-D8KF67M
Compliance standards	ISO/IEC 18000-3 (15693)			
Memory capacity	2,000 bytes (user area)		8,192 bytes (user area)	
Memory type	FRAM			
Data retention	10 years after writing (85°C or less)			
Write Endurance	One trillion times per block (85°C or less), Access frequency[See Note 1.]: One trillion times			
Ambient operating temperature	-20 to 85°C (with no icing)			
Ambient operating humidity	35% to 85%			
Ambient storage temperature	-40 to 125°C (with no icing)			
Ambient storage humidity	35% to 85%			
Degree of protection	IP68 (IEC 60529:2001), Oil resistance equivalent to IP67G (JIS C 0920:2003, Appendix 1) [See Note 2.] IPX9K (DIN 40 050)			
Vibration resistance	No abnormality after application of 10 to 2,000 Hz, 1.5-mm double amplitude, acceleration: 150 m/s², 10 sweeps each in X, Y, and Z directions for 15 minutes each			
Shock resistance	No abnormality after application of 500 m/s², 3 times each in X, Y, and Z directions (Total: 18 times)			
Dimensions	40 × 40 × 5 mm (W × H × D)			
Materials	PPS resin			
Weight	Approx. 11.5 g	Approx. 12 g	Approx. 11.5 g	Approx. 12 g
Metal countermeasures	None	Provided	None	Provided

Note 1. The number of accesses is the total number of reads and writes.
2. Oil resistance has been tested using a specific oil as defined in the OMRON test method.

The V680S-D2KF67M/-D8KF67M must be mounted on a metallic surface. The markings on the V680-D2KF67/-D8KF67 and V680-D2KF67M/-D8KF67M are shown below.

●V680S-D2KF67M/-D8KF67M

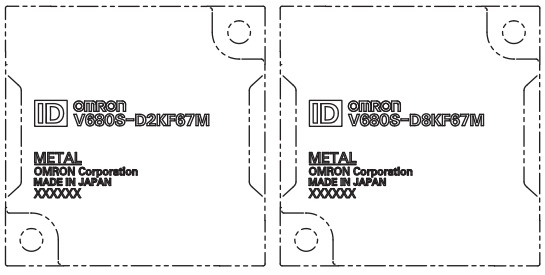

●V680S-D2KF67/-D8KF67

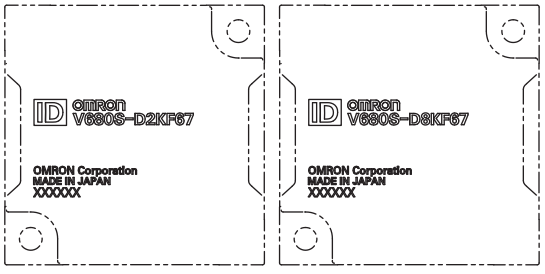

CHECK!

The marked surface is the communications surface. When mounting the RF Tag, face the marked surface toward the Reader/Writer.

CHECK!

You can use the V680S-D8KF67□ with Reader/Writers with firmware version 2.00 or higher.

▪ Dimensions

V680S-D2KF67/-D2KF67M/-D8KF67/-D8KF67M

(Unit: mm)

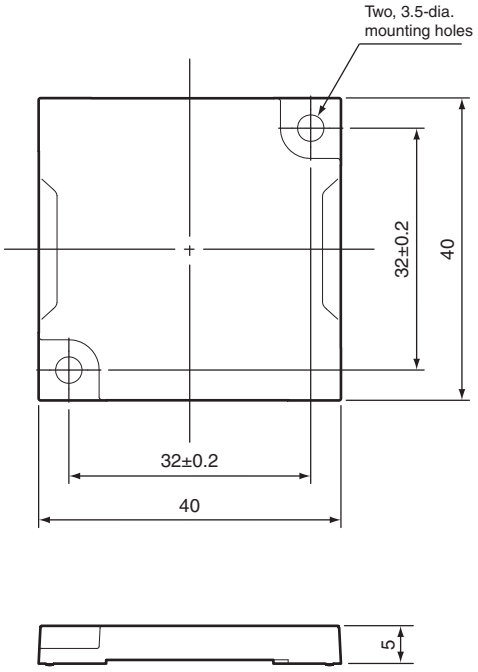

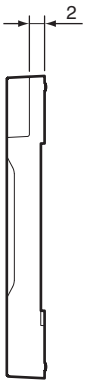

Mounting Hole Dimensions

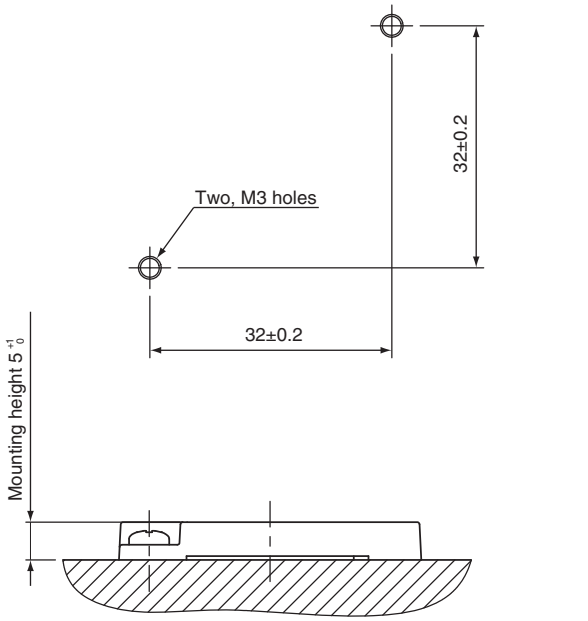

Case material	PPS resin

■ V680S-D2KF68/-D2KF68M/-D8KF68/-D8KF68M

▪ General Specifications

Item / Model	V680S-D2KF68	V680S-D2KF68M	V680S-D8KF68	V680S-D8KF68M
Compliance standards	ISO/IEC 18000-3 (15693)			
Memory capacity	2,000 bytes (user area)		8,192 bytes (user area)	
Memory type	FRAM			
Data retention	10 years after writing (85°C or less)			
Write Endurance	One trillion times per block (85°C or less), Access frequency[See Note 1.]: One trillion times			
Ambient operating temperature	-20 to 85°C (with no icing)			
Ambient operating humidity	35% to 85%			
Ambient storage temperature	-40 to 125°C (with no icing)			
Ambient storage humidity	35% to 85%			
Degree of protection	IP68 (IEC 60529), Oil resistance equivalent to IP67G (JIS C 0920:2003, Appendix 1) [See Note 2.] IPX9K (DIN 40 050)			
Vibration resistance	No abnormality after application of 10 to 500 Hz, 1.5-mm double amplitude, acceleration: 100 m/s², 10 sweeps each in X, Y, and Z directions for 11 minutes each			
Shock resistance	No abnormality after application of 500 m/s², 3 times each in X, Y, and Z directions (Total: 18 times)			
Dimensions	86 × 54 × 10 mm (W × H × D)			
Materials	PPS resin			
Weight	Approx. 44 g	Approx. 46 g	Approx. 44 g	Approx. 46 g
Metal countermeasures	None	Provided	None	Provided

Note 1. The number of accesses is the total number of reads and writes.
2. Oil resistance has been tested using a specific oil as defined in the OMRON test method.

The V680S-D2KF68M/-D8KF68M must be mounted on a metallic surface. The markings on the V680-D2KF68/-D8KF68 and V680-D2KF68M/-D8KF68M are shown below.

●V680S-D2KF68M/-D8KF68M

●V680S-D2KF68/-D8KF68

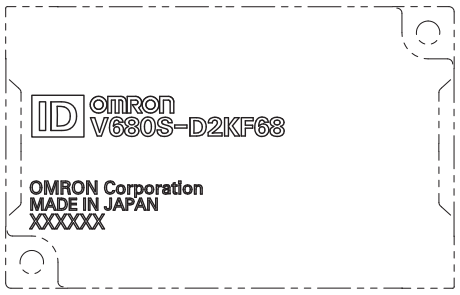

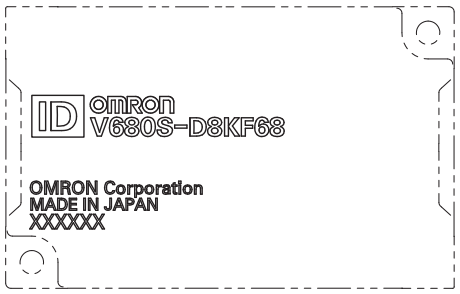

CHECK!

The marked surface is the communications surface. When mounting the RF Tag, face the marked surface toward the Reader/Writer.

CHECK!

You can use the V680S-D8KF68□ with Reader/Writers with firmware version 2.00 or higher.

▪ Dimensions

V680S-D2KF68/-D2KF68M/-D8KF68/-D8KF68M

(Unit: mm)

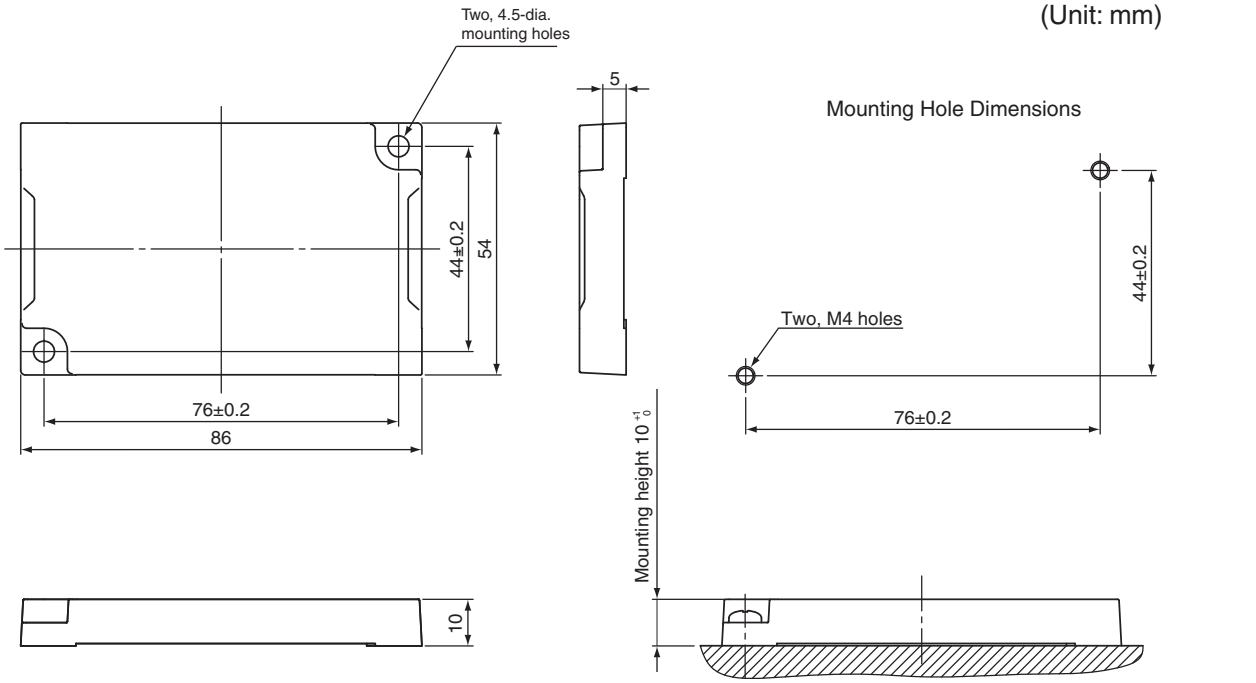

Case material	PPS resin

Data Characteristics

Communications Range Specifications

■ V680S-HMD63-PNT

Reader/Writer	RF Tag	Communications range specification	
V680S-HMD63-PNT (mounted to metallic material)	V680-D1KP54T (mounted to non-metallic material)	Read	0.0 to 24.0 mm (axis offset: ±10 mm)
		Write	0.0 to 20.0 mm (axis offset: ±10 mm)
	V680-D1KP66T (mounted to non-metallic material)	Read	0.0 to 30.0 mm (axis offset: ±10 mm)
		Write	0.0 to 25.0 mm (axis offset: ±10 mm)
	V680-D1KP66MT (mounted to metallic material)	Read	0.0 to 25.0 mm (axis offset: ±10 mm)
		Write	0.0 to 20.0 mm (axis offset: ±10 mm)
	V680-D1KP66T-SP (mounted to non-metallic material)	Read	0.0 to 25.0 mm (axis offset: ±10 mm)
		Write	0.0 to 20.0 mm (axis offset: ±10 mm)
	V680S-D2KF67 (mounted to non-metallic material)	Read	7.0 to 40.0 mm (axis offset: ±10 mm)
		Write	7.0 to 40.0 mm (axis offset: ±10 mm)
	V680S-D2KF67M (mounted to metallic material)	Read	6.0 to 30.0 mm (axis offset: ±10 mm)
		Write	6.0 to 30.0 mm (axis offset: ±10 mm)
	V680S-D8KF67 (mounted to non-metallic material)	Read	7.0 to 40.0 mm (axis offset: ±10 mm)
		Write	7.0 to 40.0 mm (axis offset: ±10 mm)
	V680S-D8KF67M (mounted to metallic material)	Read	6.0 to 30.0 mm (axis offset: ±10 mm)
		Write	6.0 to 30.0 mm (axis offset: ±10 mm)

▪ Installation Conditions

● V680-D1KP54T

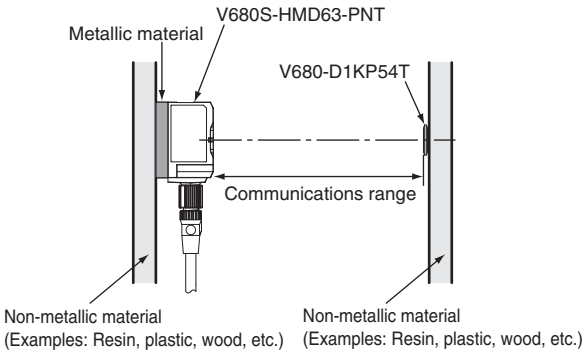

● V680-D1KP66T

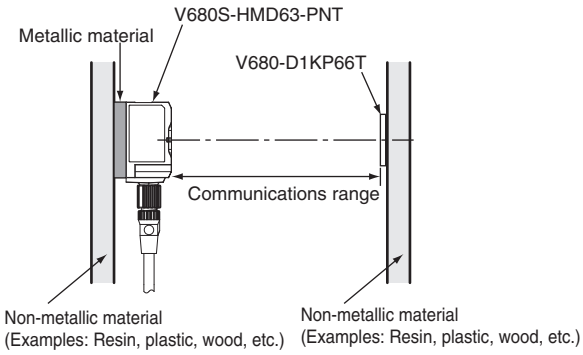

● V680-D1KP66MT

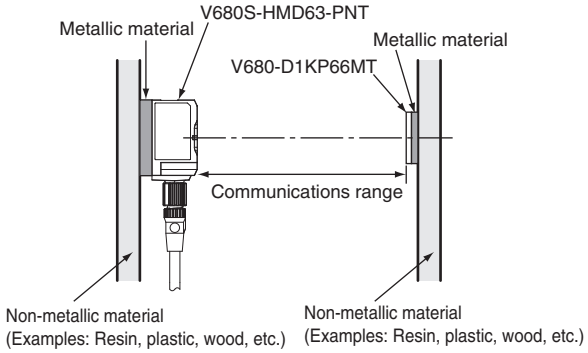

● V680-D1KP66T-SP

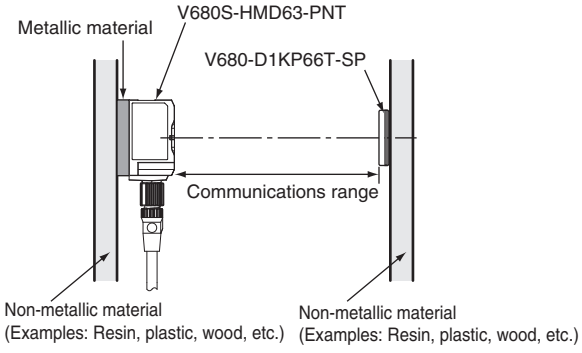

● V680S-D2KF67/-D8KF67

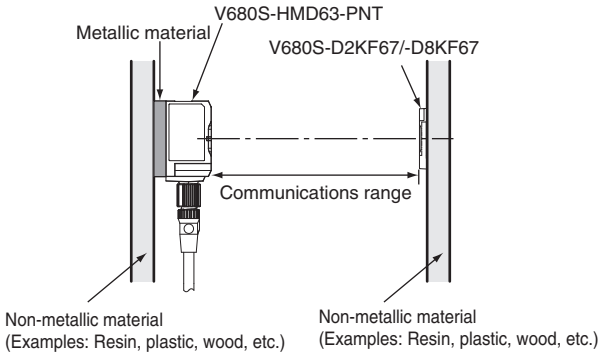

● V680S-D2KF67M/-D8KF67M

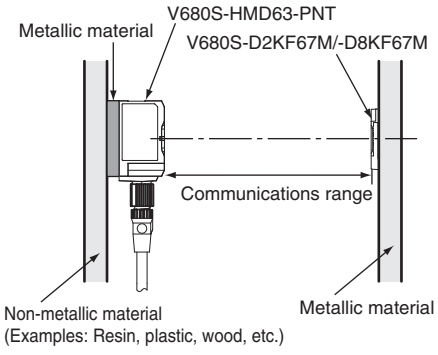

■ V680S-HMD64-PNT

Reader/Writer	RF Tag	Communications Range Specification	
V680S-HMD64-PNT (mounted to metallic material)	V680-D1KP54T (mounted to non-metallic material)	Read	0.0 to 33.0 mm (axis offset: ±10 mm)
		Write	0.0 to 28.0 mm (axis offset: ±10 mm)
	V680-D1KP66T (mounted to non-metallic material)	Read	0.0 to 47.0 mm (axis offset: ±10 mm)
		Write	0.0 to 42.0 mm (axis offset: ±10 mm)
	V680-D1KP66MT (mounted to metallic material)	Read	0.0 to 35.0 mm (axis offset: ±10 mm)
		Write	0.0 to 30.0 mm (axis offset: ±10 mm)
	V680-D1KP66T-SP (mounted to non-metallic material)	Read	0.0 to 42.0 mm (axis offset: ±10 mm)
		Write	0.0 to 37.0 mm (axis offset: ±10 mm)
	V680-D1KP58HTN	Read	7.5 to 75.0 mm (axis offset: ±10 mm)
		Write	7.5 to 75.0 mm (axis offset: ±10 mm)
	V680S-D2KF67 (mounted to non-metallic material)	Read	5.0 to 65.0 mm (axis offset: ±10 mm)
		Write	5.0 to 65.0 mm (axis offset: ±10 mm)
	V680S-D2KF67M (mounted to metallic material)	Read	3.0 to 40.0 mm (axis offset: ±10 mm)
		Write	3.0 to 40.0 mm (axis offset: ±10 mm)
	V680S-D8KF67 (mounted to non-metallic material)	Read	5.0 to 65.0 mm (axis offset: ±10 mm)
		Write	5.0 to 65.0 mm (axis offset: ±10 mm)
	V680S-D8KF67M (mounted to metallic material)	Read	3.0 to 40.0 mm (axis offset: ±10 mm)
		Write	3.0 to 40.0 mm (axis offset: ±10 mm)
	V680S-D2KF68 (mounted to non-metallic material)	Read	7.5 to 75.0 mm (axis offset: ±10 mm)
		Write	7.5 to 75.0 mm (axis offset: ±10 mm)
	V680S-D2KF68M (mounted to metallic material)	Read	5.5 to 55.0 mm (axis offset: ±10 mm)
		Write	5.5 to 55.0 mm (axis offset: ±10 mm)
	V680S-D8KF68 (mounted to non-metallic material)	Read	7.5 to 75.0 mm (axis offset: ±10 mm)
		Write	7.5 to 75.0 mm (axis offset: ±10 mm)
	V680S-D8KF68M (mounted to metallic material)	Read	5.5 to 55.0 mm (axis offset: ±10 mm)
		Write	5.5 to 55.0 mm (axis offset: ±10 mm)

▪ Installation Conditions

●V680S-D2KF67/-D8KF67

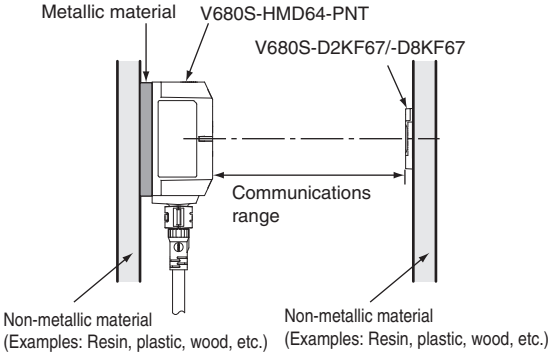

●V680S-D2KF67/-D8KF67M

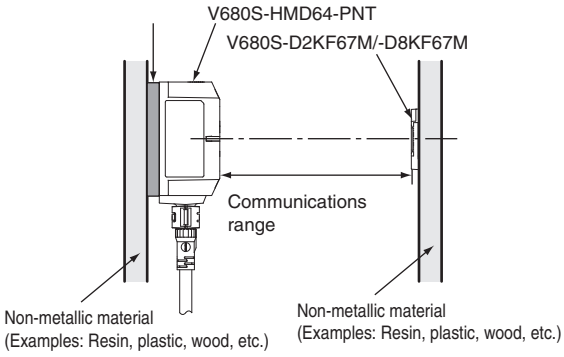

●V680S-D2KF68/-D8KF68

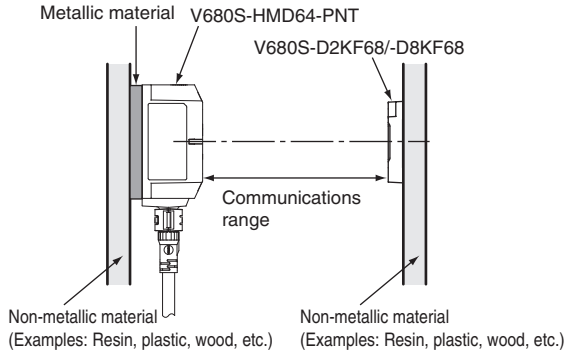

●V680S-D2KF68/-D8KF68M

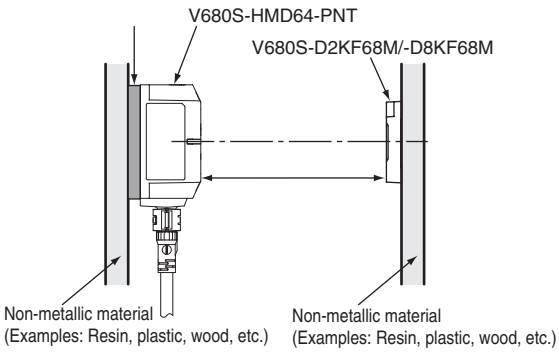

●V680-D1KP54T

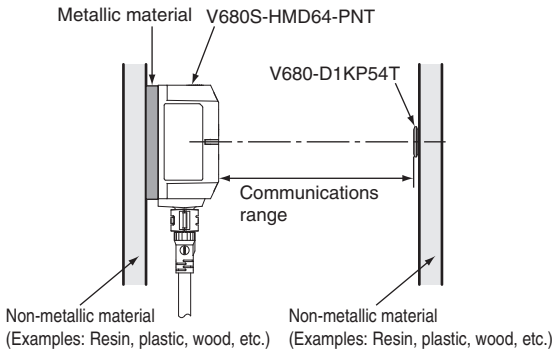

●V680-D1KP66T

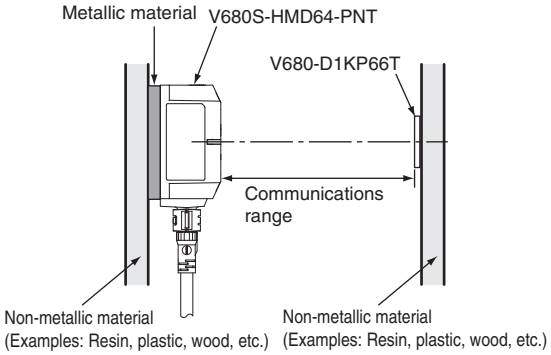

●V680-D1KP66MT

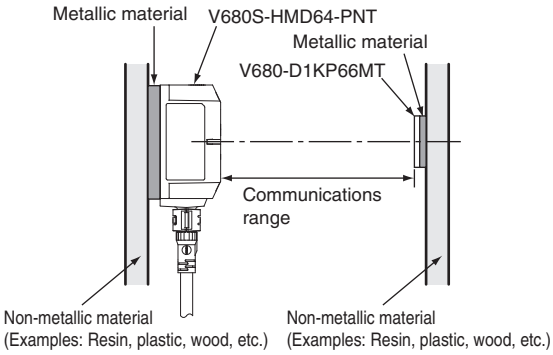

●V680-D1KP66T-SP

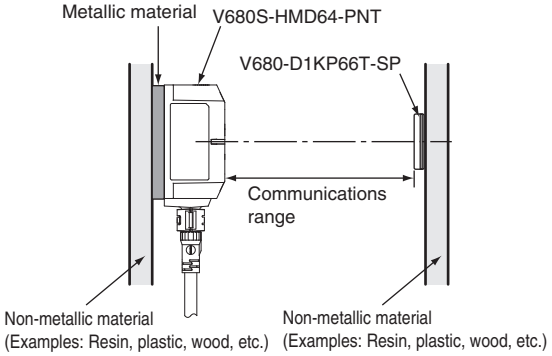

●V680-D1KP58HTN

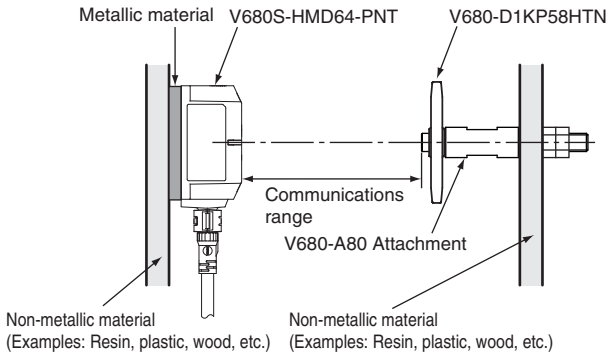

■ V680S-HMD66-PNT

Reader/Writer	RF Tag	Communications Range Specification	
V680S-HMD66-PNT (mounted to metallic material)	V680-D1KP54T (mounted to non-metallic material)	Read	7.5 to 75.0 mm (axis offset: ±10 mm)
		Write	7.5 to 75.0 mm (axis offset: ±10 mm)
	V680-D1KP66T (mounted to non-metallic material)	Read	0.0 to 45.0 mm (axis offset: ±10 mm)
		Write	0.0 to 38.0 mm (axis offset: ±10 mm)
	V680-D1KP66MT (mounted to metallic material)	Read	0.0 to 37.0 mm (axis offset: ±10 mm)
		Write	0.0 to 30.0 mm (axis offset: ±10 mm)
	V680-D1KP66T-SP (mounted to non-metallic material)	Read	0.0 to 59.0 mm (axis offset: ±10 mm)
		Write	0.0 to 52.0 mm (axis offset: ±10 mm)
	V680-D1KP58HTN	Read	10.0 to 90.0 mm (axis offset: ±10 mm)
		Write	10.0 to 800.0 mm (axis offset: ±10 mm)
	V680S-D2KF67 (mounted to non-metallic material)	Read	7.0 to 70.0 mm (axis offset: ±10 mm)
		Write	7.0 to 70.0 mm (axis offset: ±10 mm)
	V680S-D2KF67M (mounted to metallic material)	Read	4.0 to 45.0 mm (axis offset: ±10 mm)
		Write	4.0 to 45.0 mm (axis offset: ±10 mm)
	V680S-D8KF67 (mounted to non-metallic material)	Read	7.0 to 70.0 mm (axis offset: ±10 mm)
		Write	7.0 to 70.0 mm (axis offset: ±10 mm)
	V680S-D8KF67M (mounted to metallic material)	Read	4.0 to 45.0 mm (axis offset: ±10 mm)
		Write	4.0 to 45.0 mm (axis offset: ±10 mm)
	V680S-D2KF68 (mounted to non-metallic material)	Read	10.0 to 100.0 mm (axis offset: ±10 mm)
		Write	10.0 to 100.0 mm (axis offset: ±10 mm)
	V680S-D2KF68M (mounted to metallic material)	Read	7.5 to 75.0 mm (axis offset: ±10 mm)
		Write	7.5 to 75.0 mm (axis offset: ±10 mm)
	V680S-D8KF68 (mounted to non-metallic material)	Read	10.0 to 100.0 mm (axis offset: ±10 mm)
		Write	10.0 to 100.0 mm (axis offset: ±10 mm)
	V680S-D8KF68M (mounted to metallic material)	Read	7.5 to 75.0 mm (axis offset: ±10 mm)
		Write	7.5 to 75.0 mm (axis offset: ±10 mm)

CHECK!

You can use the V680S-D8KF6□ with Reader/Writers with firmware version 2.00 or higher.

▪ Installation Conditions

● V680S-D2KF67/-D8KF67

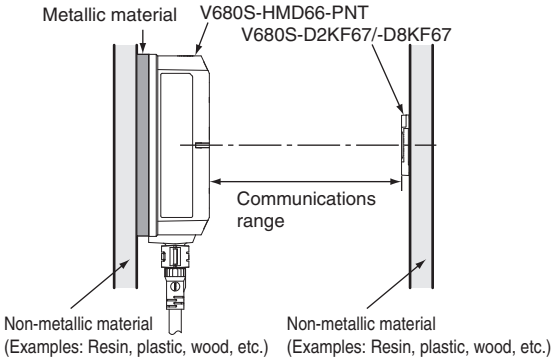

● V680S-D2KF67M/-D8KF67M

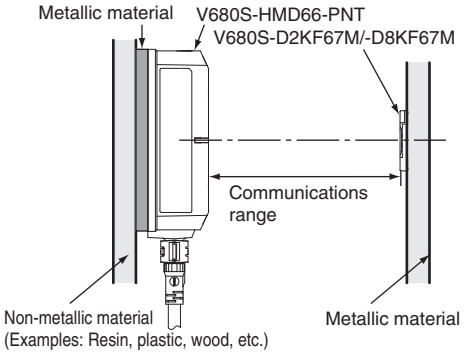

● V680S-D2KF68/-D8KF68

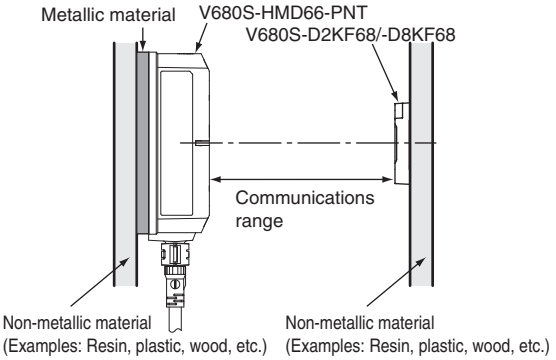

● V680S-D2KF68M/-D8KF68M

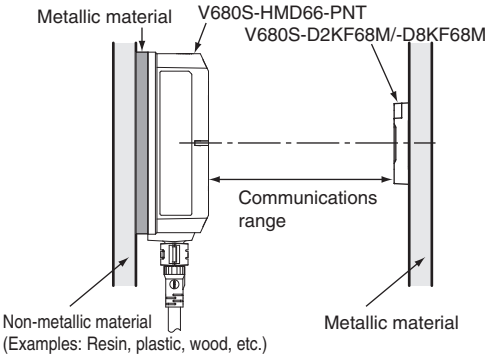

●V680-D1KP54T

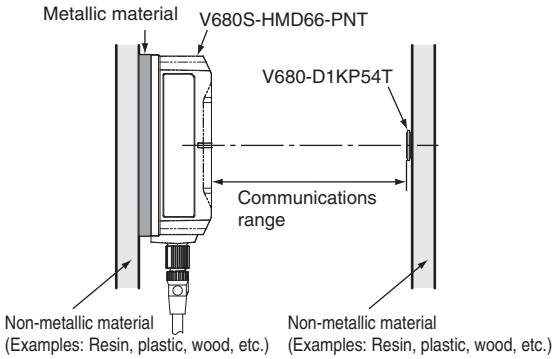

●V680-D1KP66T

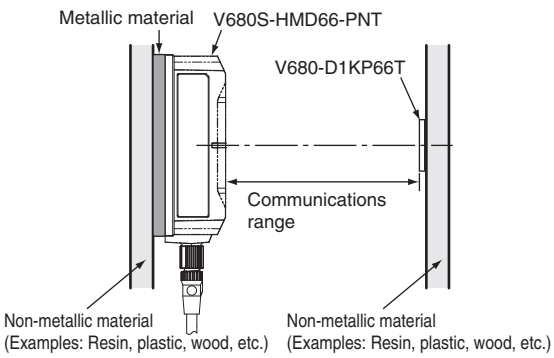

●V680-D1KP66MT

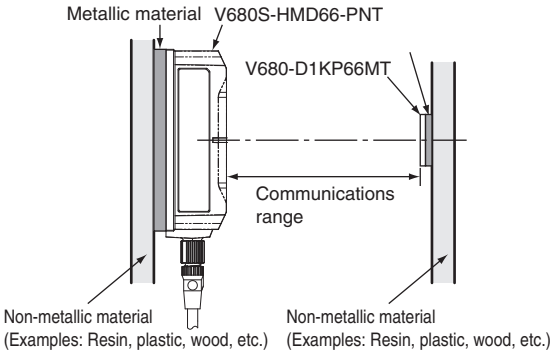

●V680-D1KP66T-SP

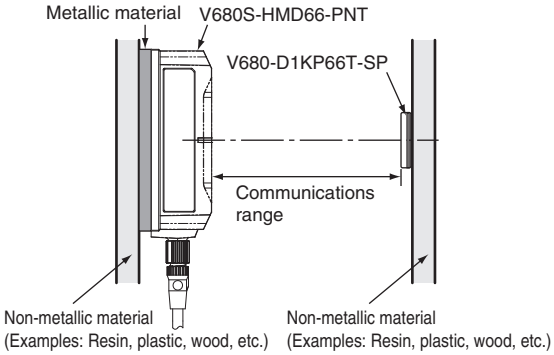

●V680-D1KP58HTN

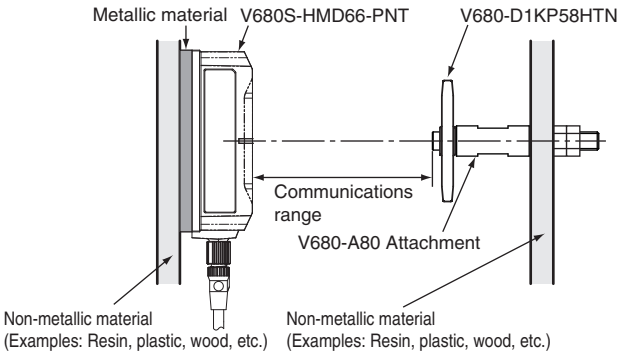

MEMO

Section 2
System Configuration

System Configuration 54

System Configuration

■ One Reader/Writer is connected to the Host device (e.g., PLC)

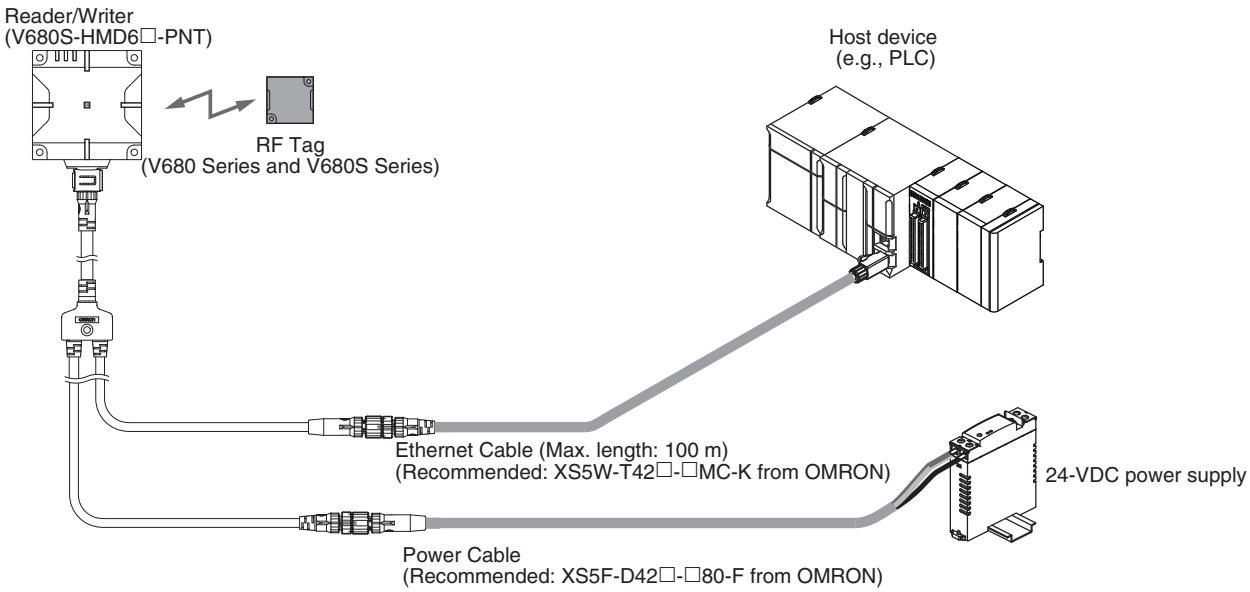

CHECK!

Connect the Ethernet Cable to a host device (e.g., Switching Hub or PLC) that supports STP and ground the host device to 100 Ω or less.

■ The plural Reader/Writer's are connected to the Host device (e.g., PLC)

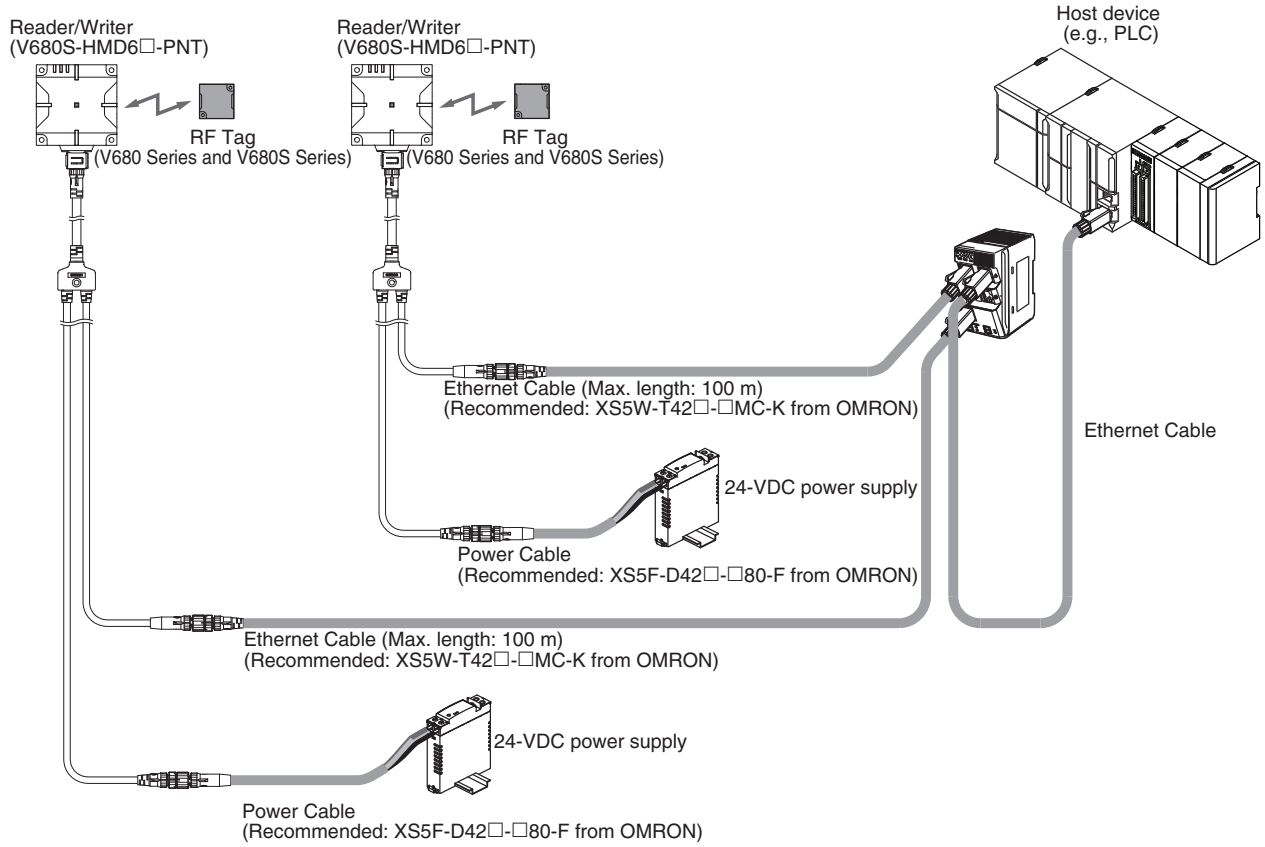

CHECK!

Connect the Ethernet Cable to a host device (e.g., Switching Hub or PLC) that supports STP and ground the host device to 100 Ω or less.

CHECK!

Always use a Switching Hub on any network where cyclic data exchanges are used.

■ The computer is connected to monitor the results of communications diagnostics

The system requirements to use the Web browser are as follows:
- Windows 8.1/Windows 10
- Internet Explorer 11/Microsoft Edge/Google Chrome

For details, refer to Section 8 Web Browser Interface.
p.185

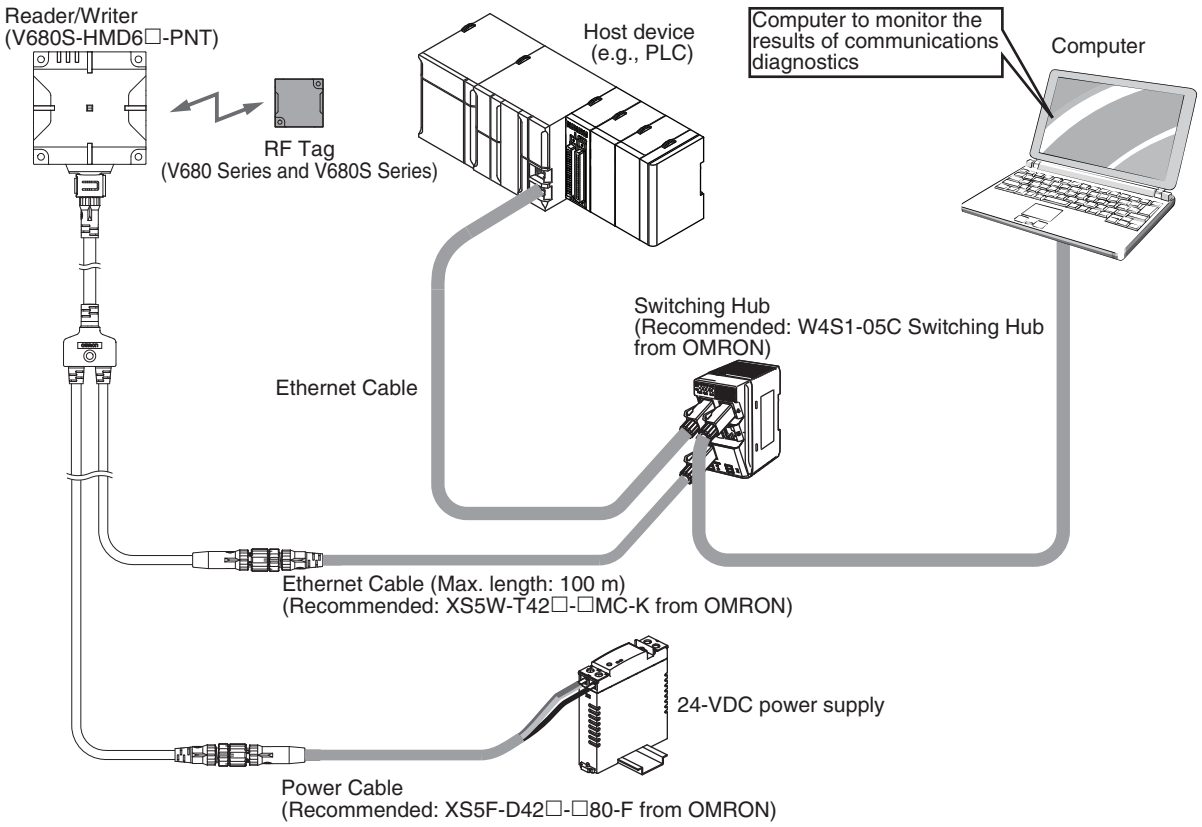

CHECK!

Connect the Ethernet Cable to a host device (e.g., Switching Hub or PLC) that supports STP and ground the host device to 100 Ω or less.

CHECK!

Always use a Switching Hub on any network where cyclic data exchanges are used.

■ About the Ethernet communication abnormality

CHECK!

If an Ethernet network is configured into a loop as shown below, broadcast packets are accumulated in the band, and the communication is disabled. Therefore, do not configure the Ethernet network into a loop.

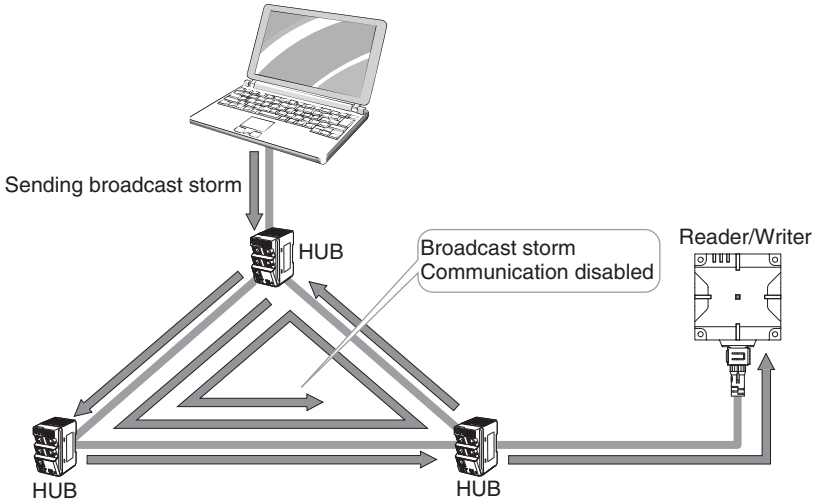

CHECK!

When a large amount of broadcast packets or multicast packets flow into the Ethernet network, Reader/Writers may stop its operation. Please do not send a large amount of packet. Please separate the Reader/Writers from the network segment that broadcast or multicast packets flow.

MEMO

Section 3
Component Names

Component Names 60

Reader/Writer 60

RF Tag 64

Component Names

Reader/Writer

V680S-HMD63-PNT

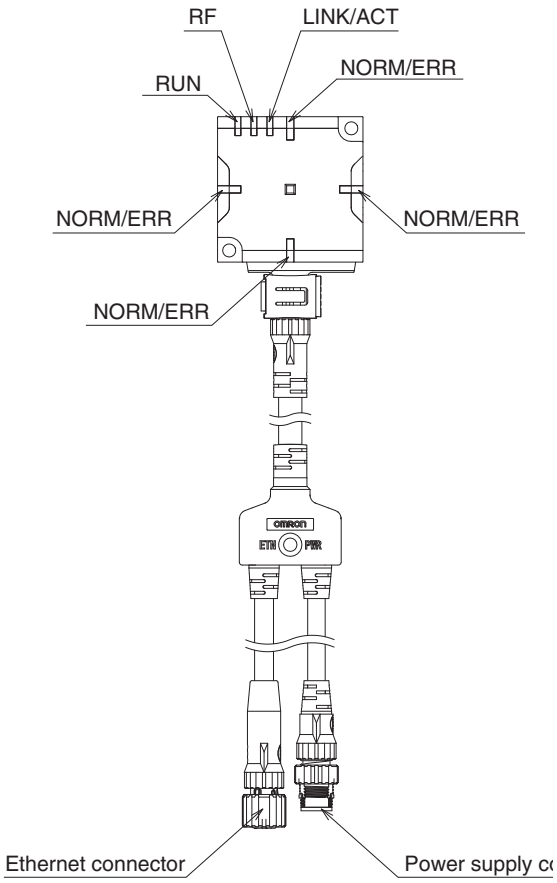

V680S-HMD64-PNT

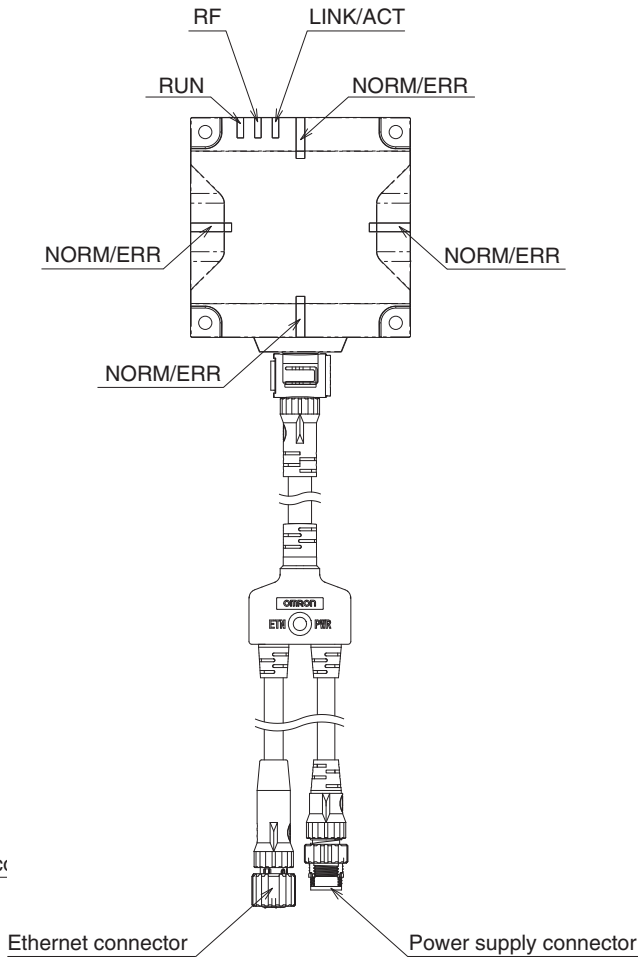

V680S-HMD66-PNT

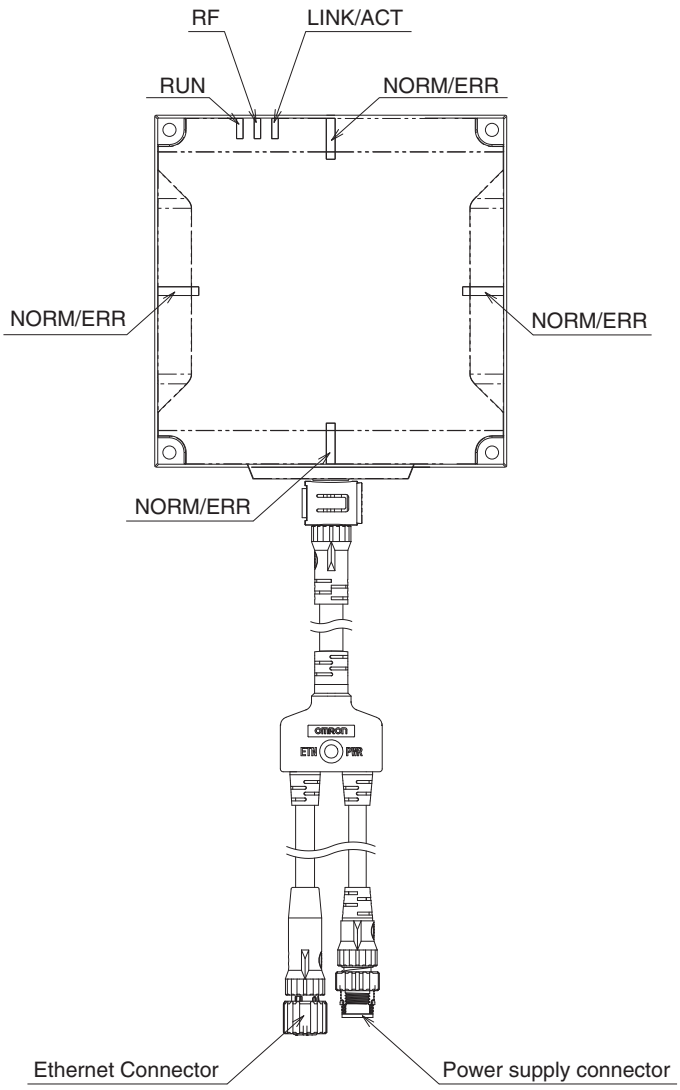

■ Operation Indicators

▪ RUN

Status	Meaning
Lit green	Lighting while the Reader/Writer is in Run Mode and cyclic data exchanges connection are established.
Flashing green	Flashes during operation in Safe Mode. (Flashes at 1-s intervals.)
Flashing green quickly	The indicator will flash quickly in the following cases. (Flashes at 200-ms intervals.) • During Reader/Writer initialization • While the Reader/Writer is in Run Mode and is waiting to establish a connection for cyclic data exchanges from the IO controller
Lit yellow	Lights yellow while the Reader/Writer is operating in Slave Mode.
Flashing yellow quickly	Flashes quickly while the Reader/Writer is in Slave Mode and is waiting to establish a connection for cyclic data exchanges from the IO controller.
Not lit	Turn off when power is not supplied.

▪ RF

Status	Meaning
Lit yellow	Lighting during communication for RF Tag.
Not lit	Turn off when not in communication with no error.

▪ NORM/ERR

The NORM/ERR indicator shows the result of communications with an RF Tag.

Status	Meaning
Lit green	Lights once when processing a communications command or another command from the host device is completed normally. When communication diagnostic is enabled, this indicator will flash once each time a stable communication is detected.
Lit yellow	When communication diagnostic is enabled, this indicator will flash once each time an unstable communication is detected.
Flashing yellow quickly	Flashes quickly when a timeout is detected during cyclic data exchanges. (A timeout occurs when I/O data from the IO controller is not received within the time specified for the timeout value.)
Lit red	Lights once when processing a communications command or another command from the host device ends in an error. It continues to light if a system error occurred.
Flashing red	Flash when recoverable error occurs. (Configuration memory error, or Control signal wiring mistake, etc.)
Flashing red irregularly	The indicator will flash irregularly in the following cases. (It will repeatedly flash twice for 100 ms at 1-s intervals.) • When the same IP address is detected for two different devices on the network at startup
Not lit	Turn off when the standby state.

▪ LINK/ACT

Status	Meaning
Lit green	Lighting during linking normally.
Flashing green	Flash during detects a carrier.
Not lit	Turn off when the Ethernet cable is not connected.

Refer to *Errors and Indicator Status* in *Section 9 Troubleshooting* for information of Error content of the operation indicator

p.212

■ Connector

▪ Power Supply Connector (M12 A-Coding)

Power Supply Connector (M12 A-Coding, male)

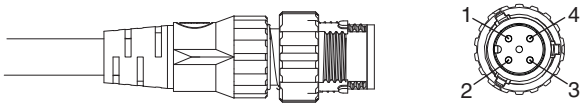

Pin No.	Name	Description	I/O
1	24P	+24 V	---
2	CONT	Control signal (operating mode signal) * Run Mode: Connect to +24 V and then start the Reader/Writer. Safe Mode: Connect to 0 V and then start the Reader/Writer.	IN
3	24N	0 V	---
4	-	-	---

▪ Ethernet Connector (M12 D-Coding)

Ethernet Connector (M12 D-Coding, female)

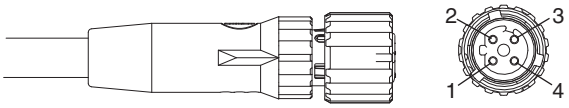

Pin No.	Name	Description	I/O
1	TD+	Ethernet send signal +	OUT
2	RD+	Ethernet receive signal +	IN
3	TD-	Ethernet send signal -	OUT
4	RD-	Ethernet receive signal -	IN
Housing	FG	Frame ground	---

CHECK!

If an Ethernet network is configured into a loop as shown below, broadcast packets are accumulated in the band, and the communication is disabled. Therefore, do not configure the Ethernet network into a loop.

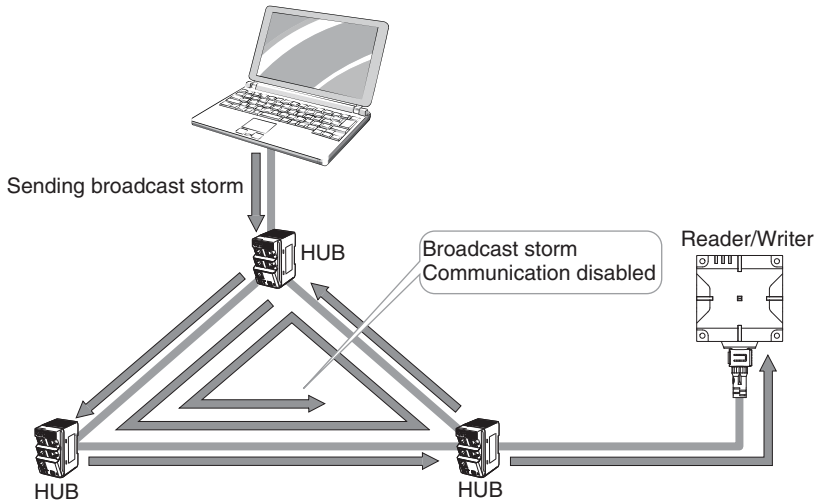

CHECK!

When a large amount of broadcast packets or multicast packets flow into the Ethernet network, Reader/Writers may stop its operation. Please do not send a large amount of packet. Please separate the Reader/Writers from the network segment that broadcast or multicast packets flow.

RF Tag

The model numbers of the RF Tags that can communicate with the Reader/Writer are given in this section. For the communications range specifications, refer to *Communications Range Specifications* in *Section 1 Product Overview*.

p.44

(Unit: mm)

■ V680-D1KP54T

Shape: 20 dia. × 2.7

■ V680-D1KP66T/-D1KP66MT

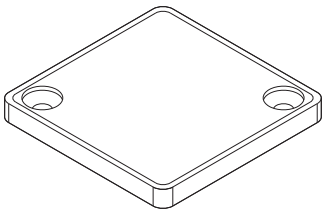

Shape: 34 × 34 × 3.5 (W × H × D)

■ V680-D1KP66T-SP

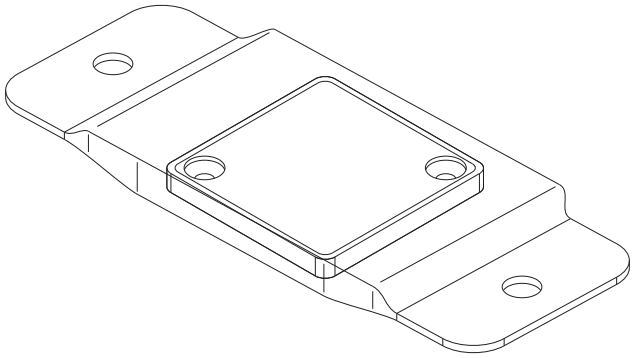

Shape: 95 × 36.5 × 6.5 (W × H × D)
(excluding protruding parts)

■ V680-D1KP58HTN

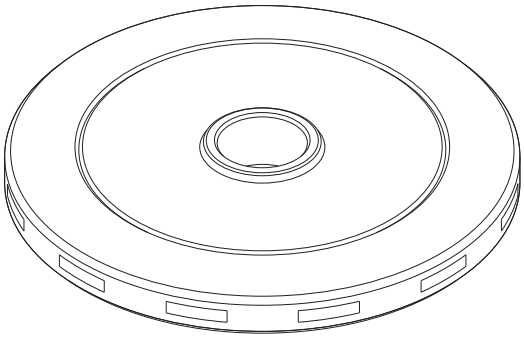

Shape: 80 dia. × 10

(Unit: mm)

■ V680S-D2KF67/-D2KF67M/-D8KF67/-D8KF67M

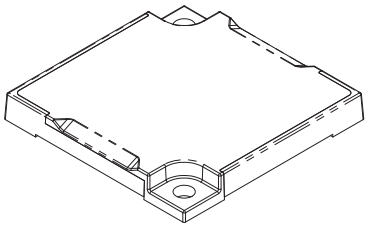

Shape: 40 × 40 × 5 (W × H × D)

■ V680S-D2KF68/-D2KF68M/-D8KF68/-D8KF68M

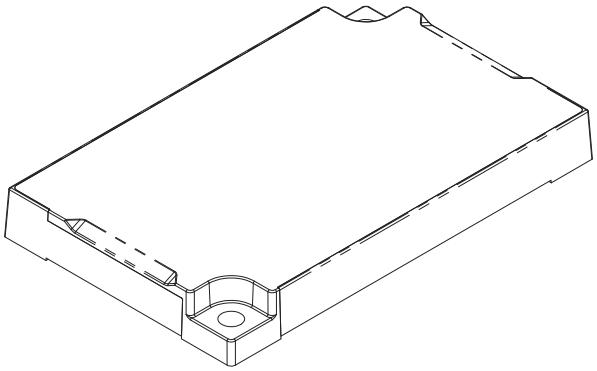

Shape: 86 × 54 × 10 (W × H × D)

CHECK! You can use the V680S-D8KF6□ with Reader/Writers with firmware version 2.00 or higher.

MEMO

Section 4
Installation and Connections

Installation	68
Reader/Writer	68
Connector Cover	71
RF Tag	73
Connections and Wiring	80
Connecting and Removing the Reader/Writer Power Cable and Ethernet Cable	80

Installation

Reader/Writer

■ V680S-HMD63-PNT

Install the Reader/Writer with two M4 screws. Use both spring washers and flat washer.

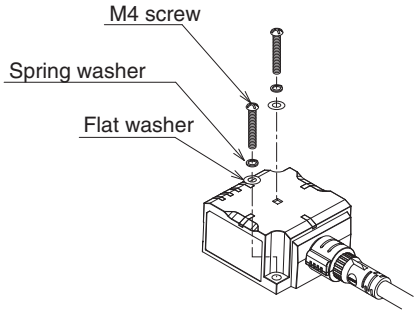

Mounting Hole Dimensions

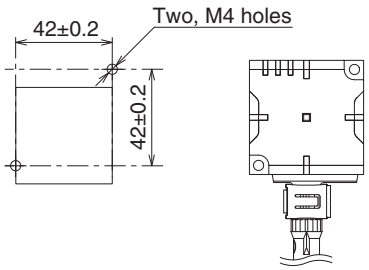

(Unit: mm)

When you install the Reader/Writer, prepare the metal plate shown in the following figure.
When the metal plates size is larger than the below illustration, communication range will change.

Material: Steel

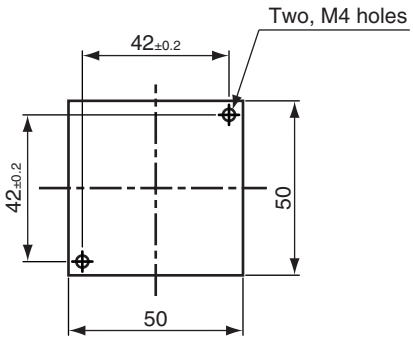

(Unit: mm)

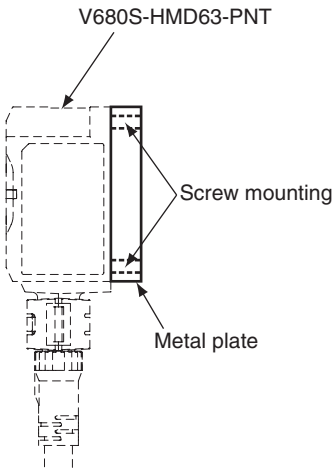

CHECK!

Although it is possible to use SUS, aluminum or brass in addition to steel as the metal plate, communications range is influenced by the material. Do not use resin as the metal plate.

CHECK!

The recommended tightening torque for M4 screws is 1.2 N·m.

Refer to *Reader/Writer Installation Precautions* in *Section 11 Appendices* for information of surrounding metal and Mutual Interference of Reader/Writers.

p.248

■ V680S-HMD64-PNT

Install the Reader/Writer with four M4 screws. Use both spring washers and flat washers.

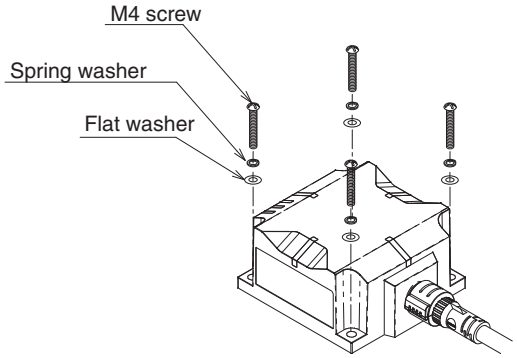

Mounting Hole Dimensions

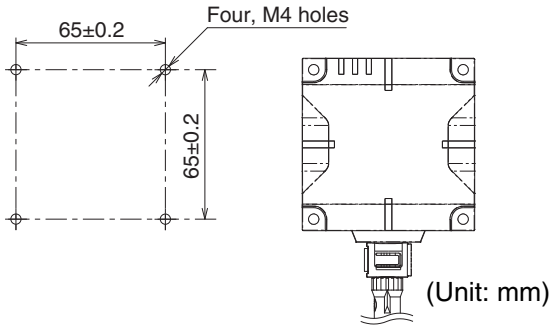

(Unit: mm)

When you install the Reader/Writer, prepare the metal plate shown in the following figure.
When the metal plates size is larger than the below illustration, communication range will change.

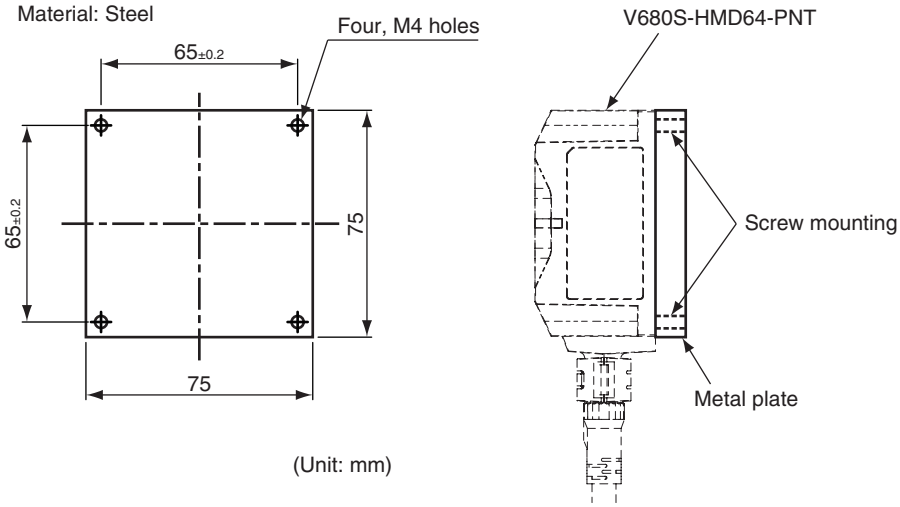

(Unit: mm)

CHECK!

Although it is possible to use SUS, aluminum or brass in addition to steel as the metal plate, communications range is influenced by the material. Do not use resin as the metal plate.

CHECK!

The recommended tightening torque for M4 screws is 1.2 N·m.

Refer to *Reader/Writer Installation Precautions* in *Section 11 Appendices* for information of surrounding metal and Mutual Interference of Reader/Writers.

p.248

■ V680S-HMD66-PNT

Install the Reader/Writer with four M4 screws. Use both spring washers and flat washers.

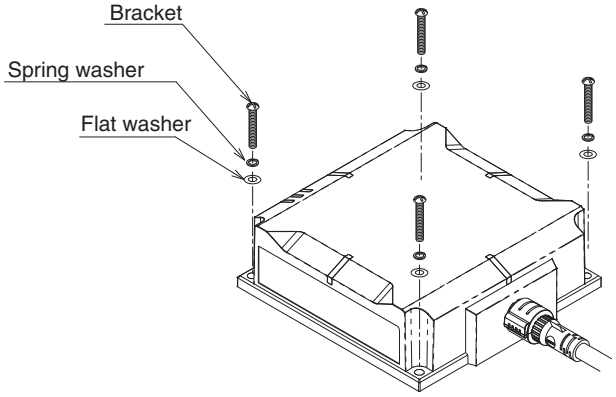

Mounting Hole Dimensions

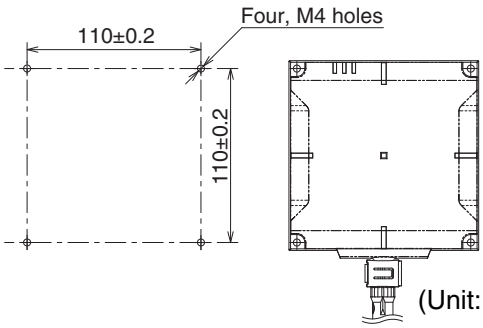

(Unit: mm)

When you install the Reader/Writer, prepare the metal plate as shown in the following figure.
When the metal plates size is larger than the below illustration, communication range will change.

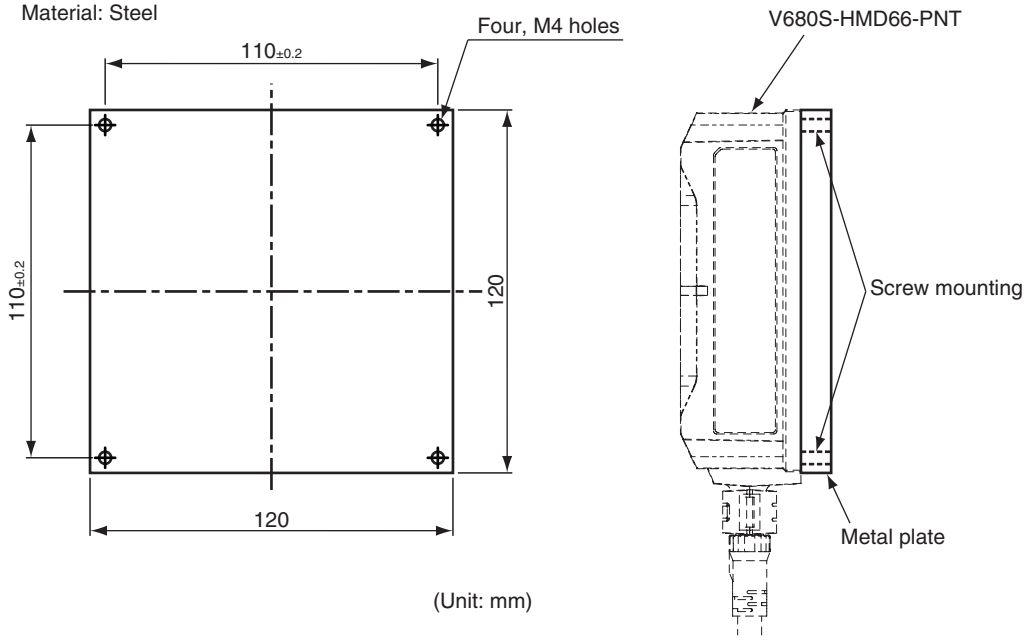

(Unit: mm)

CHECK! Although it is possible to use SUS, aluminum or brass in addition to steel as the metal plate, communications range is influenced by the material. Do not use resin as the metal plate.

CHECK! The recommended tightening torque for M4 screws is 1.2 N·m.

Refer to *Reader/Writer Installation Precautions* in *Section 11 Appendices* for information of surrounding metal and Mutual Interference of Reader/Writers.

p.248

Connector Cover

■ V680S-A63-S

Either use the V680S-A63-S Attachment to mount the Connector Cover with screws or permanently attach the RF Tags with adhesive.

1. Through a cord into a connector cover.

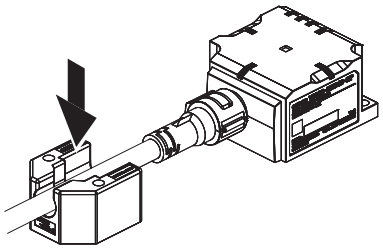

2. Press a connector cover up until it clicks.

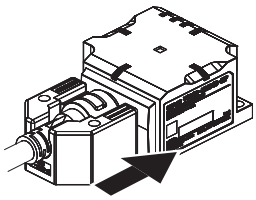

3. Install the connector cover with two M4 screws.

Tightening torque: 1.2 N·m

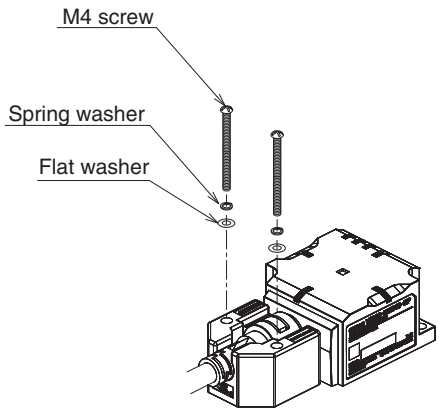

CHECK! When removing a connector, please remove the screw on which a connector cover is being fixed and shift a connector cover.
(1),(2),(3) above-mentioned is reverse.

■ V680S-A64-S

Either use the V680S-A64-S Attachment to mount the Connector Cover with screws or permanently attach the RF Tags with adhesive.

1. Through a cord into a connector cover.

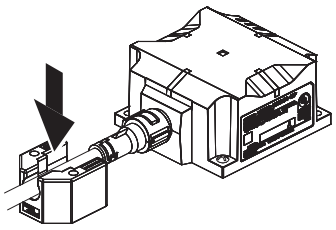

2. Press a connector cover up until it clicks.

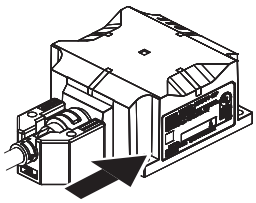

3. Install the connector cover with two M4 screws.

Tightening torque: 1.2 N·m

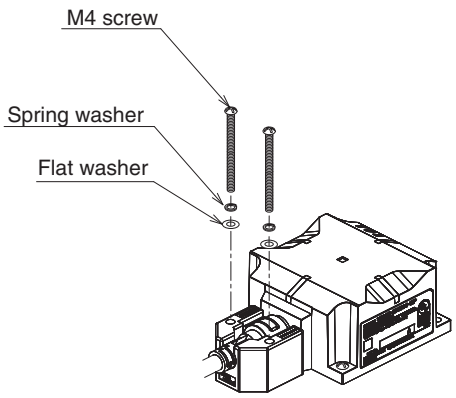

CHECK! When removing a connector, please remove the screw on which a connector cover is being fixed and shift a connector cover.
(1),(2),(3) above-mentioned is reverse.

RF Tag

■ V680-D1KP54T

Either use the V700-A80 Attachment to mount the RF Tags with screws or permanently attach the RF Tags with adhesive.

Installation with the V700-A80 Attachment

1. Place the V680-D1KP54T RF Tag in the Attachment.

The V680-D1KP54T RF Tag can be placed in the Attachment in either direction.
The direction does not affect operation.

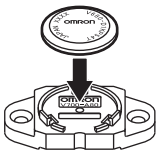

CHECK! Do not repeatedly place the RF Tag in the Attachment and remove it from the Attachment. If you do so, the RF Tag will become loose or the Attachment will be damaged.
If you must remove an RF Tag from the Attachment, insert a flat-blade screwdriver in the gap under the RF Tag. Do not try to remove it with your bare hands. Doing so may result in injury.

2. Mount the Attachment with M3 screws.

Tighten the screws to a suitable torque.
Tightening torque: 0.3 to 0.5 N·m

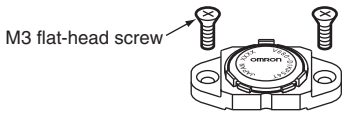

Mounting Hole Dimensions

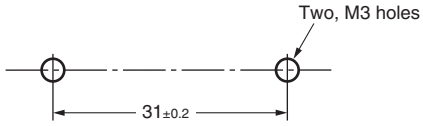

▪ Installation with Adhesive

Select an adhesive that is suitable for the materials. Use the correct application method and amount. Always confirm that the RF Tag is securely attached before you use it.

The RF Tags are made from PPS resin. We recommend epoxy adhesives to mount them on metal or hard plastic.

The epoxy adhesives that are listed in the following table are recommended for the given temperature ranges.

Ambient operating temperature	Product name	Manufacturer
-40 to 70°C	Two-part Epoxy Adhesive: TB2001 (main agent)/TB2105C (curing agent)	ThreeBond Co., Ltd.
	One-part Moisture-curing Elastic Adhesive: TB1530	ThreeBond Co., Ltd.
-40 to 110°C	Two-part Epoxy Adhesive: EP001	Cemedine Co. Ltd.
-40 to 150°C	One-part Epoxy Adhesive: TB2285	ThreeBond Co., Ltd.
	Two-part Epoxy Adhesive: TB2087	ThreeBond Co., Ltd.

CHECK! The above adhesives may not provide sufficient strength when attaching RF Tags to polyethylene, polypropylene, fluororesins, or silicon-based resins. Check applicability carefully in advance. Consult with the manufacturer for detailed information on adhesives.

■ V680-D1KP66T

▪ Mounting on Non-metallic Material

Mount the RF Tag using M3 flat-head screws from the marked side.

Tighten the screws to a torque of 0.3 to 0.5 N·m.

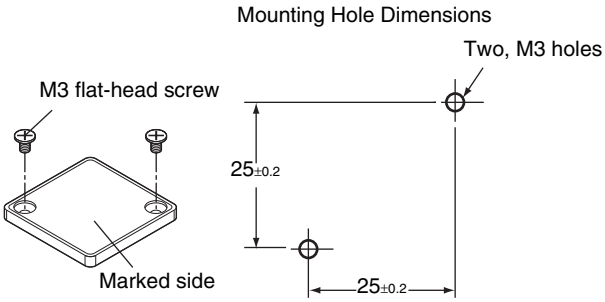

▪ Mounting on Metallic Material

The communications range will decrease if there is metal at the back of the V680-D1KP66T RF Tag.

If the RF Tag is mounted on metallic material, use the V600-A86 Attachment (sold separately) or a non-metallic spacer (e.g., plastic or resin).

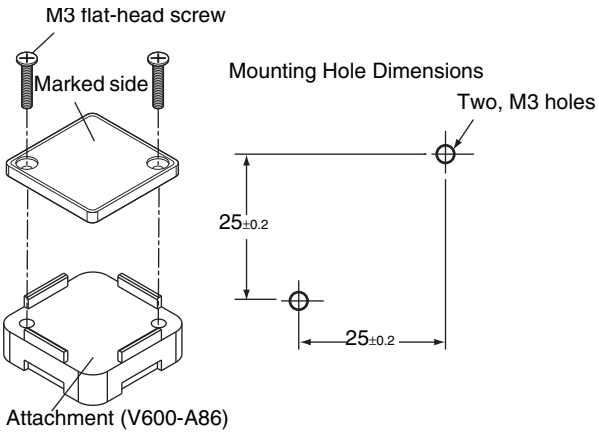

Refer to *RF Tag Installation Precautions* in *Section 11 Appendices* for information on the effect of metal at the back surface, Mutual Interference of RF Tags and Influence of Inclination of the V680-D1KP66T.

p.253

■ V680-D1KP66MT

Mount the RF Tag using M3 flat-head screws from the marked side.
Tighten the screws to a torque of 0.3 to 0.5 N·m.

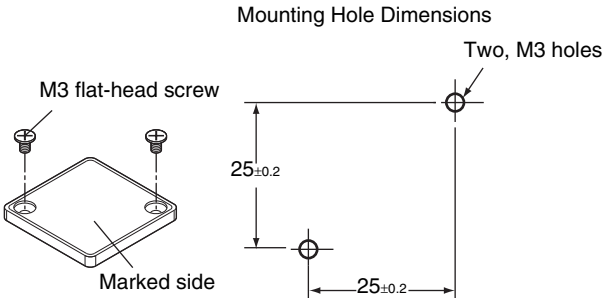

When you install the RF tag, prepare the metal plate as shown in the figure below.
When the metal plates size is larger than the below illustration, communication range will change.
Please confirm the influence well.

Material: Steel

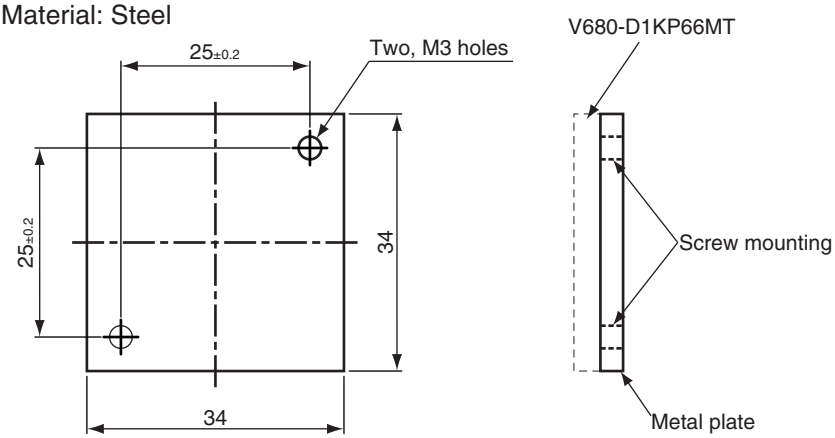

(Unit: mm)

CHECK!

Although it is possible to use SUS, aluminum or brass in addition to steel as the metal plate, communications range is influenced by the material. Do not use resin as the metal plate.

Refer to *RF Tag Installation Precautions* in *Section 11 Appendices* for information on the effect of surrounding metal, Mutual Interference of RF Tags and Influence of Inclination on the V680-D1KP66MT.

p.253

■ V680-D1KP66T-SP

Mount the RF Tag using M5 screws and washers. The tightening torque is 1.2 N·m.

There are no restrictions on the mounting direction for the RF Tag or the direction of RF Tag travel in respect to the Reader/Writer.

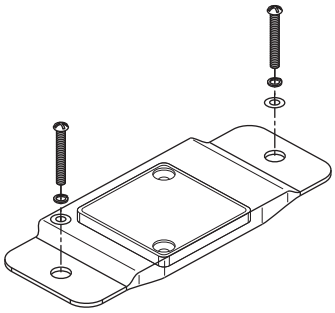

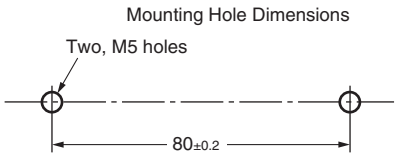

Refer to *RF Tag Installation Precautions* in *Section 11 Appendices* for information on the effect of metal at the back surface, Mutual Interference of RF Tags and Influence of Inclination of the V680-D1KP66T-SP.

p.253

■ V680-D1KP58HTN

Use the following procedure to install an RF Tag with the V680-A80 Attachment.

1. Attach the Attachment to the workpiece.

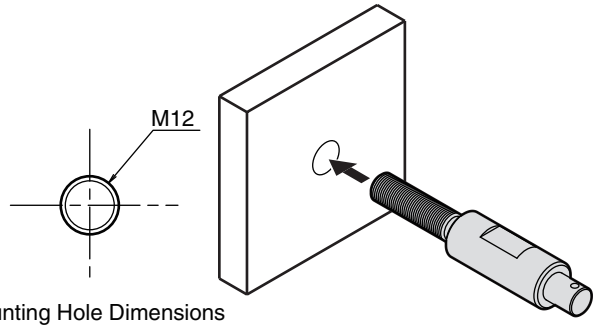

Mounting Hole Dimensions

2. Tighten the lock nut.

CHECK! Use a tightening torque of 21 to 42 N·m.

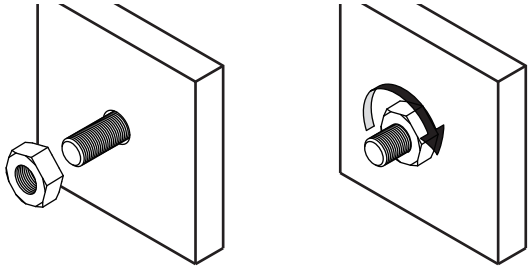

3. Place the RF Tag in the Attachment.

CHECK! The RF Tag can be attached in either direction. The direction does not affect operation.

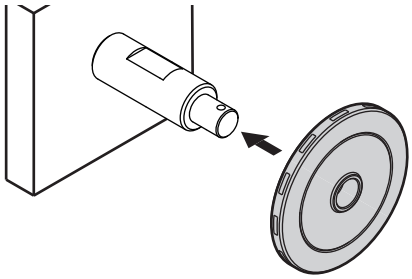

4. Insert the split pin into the 3.2-diameter hole and spread open the end of the pin to prevent it from coming out.

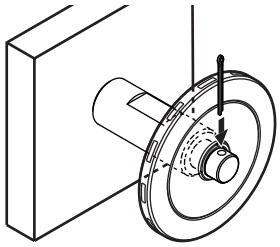

CHECK! Two nuts and one split pin are provided with the V680-A80 Attachment. You must provide any replacement split pins.

Split pin	Nominal dimensions: 3.2-mm dia. × 20-mm length

Refer to *RF Tag Installation Precautions* in *Section 11 Appendices* for information on the effect of metal at the back surface, Mutual Interference of RF Tags and Influence of Inclination of the V680-D1KP58HTN.

p.253

■ V680S-D2KF67/-D8KF67

Mount the RF Tag with M3 screws.

Tighten the screws to a torque of 0.6 N·m.

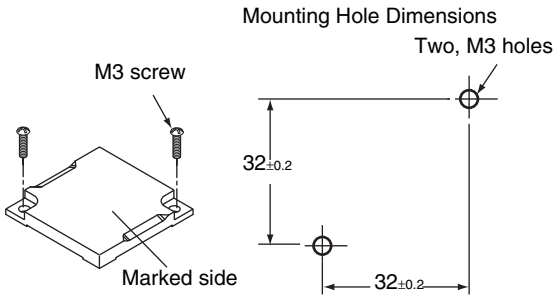

Refer to *RF Tag Installation Precautions* in *Section 11 Appendices* for information on the effect of metal at the back surface, Mutual Interference of RF Tags and Influence of Inclination of the V680S-D2KF67.

p.253

Refer to *RF Tag Installation Precautions* in *Section 11 Appendices* for information on the effect of metal at the back surface, Mutual Interference of RF Tags and Influence of Inclination of the V680S-D8KF67.

p.253

CHECK!

You can use the V680S-D8KF67 with Reader/Writers with firmware version 2.00 or higher.

■ V680S-D2KF67M/-D8KF67M

Mount the V680-D8KF67M to a metal surface.

Mount the RF Tag with M3 screws.

Tighten the screws to a torque of 0.6 N·m.

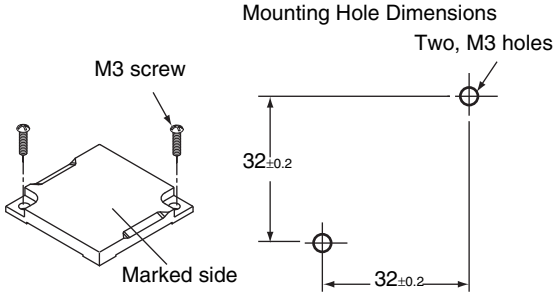

Refer to *RF Tag Installation Precautions* in *Section 11 Appendices* for information on the effect of surrounding metal, Mutual Interference of RF Tags and Influence of Inclination on the V680S-D2KF67M.

p.253

Refer to *RF Tag Installation Precautions* in *Section 11 Appendices* for information on the effect of surrounding metal, Mutual Interference of RF Tags and Influence of Inclination on the V680S-D8KF67M.

p.253

CHECK!

You can use the V680S-D8KF67M with Reader/Writers with firmware version 2.00 or higher.

■ V680S-D2KF68/-D8KF68

Mount the RF Tag with M4 screws. Tighten the screws to a torque of 0.7 to 1.2 N·m.

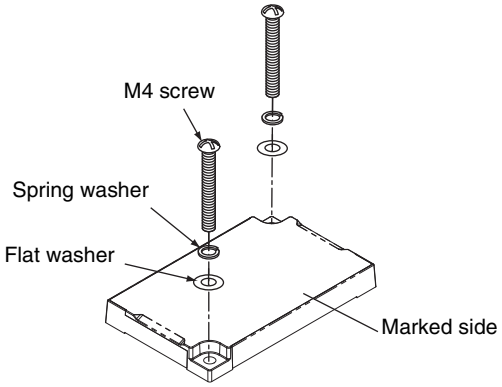

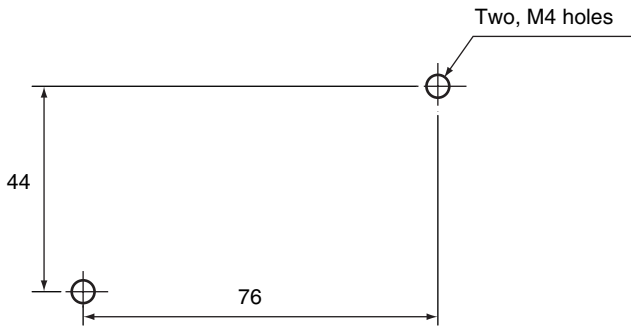

(Unit: mm)

Refer to *RF Tag Installation Precautions* in *Section 11 Appendices* for information on the effect of metal at the back surface, Mutual Interference of RF Tags and Influence of Inclination of the V680S-D2KF68.

p.253

Refer to *RF Tag Installation Precautions* in *Section 11 Appendices* for information on the effect of metal at the back surface, Mutual Interference of RF Tags and Influence of Inclination of the V680S-D2KF68.

p.253

CHECK!

You can use the V680S-D8KF68 with Reader/Writers with firmware version 2.00 or higher.

■ V680S-D2KF68M/-D8KF68M

Mount the RF Tag with M4 screws. Tighten the screws to a torque of 0.7 to 1.2 N·m.

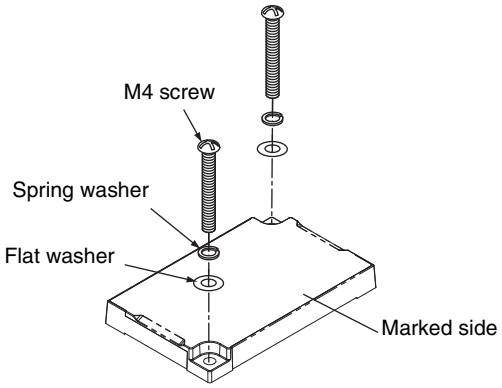

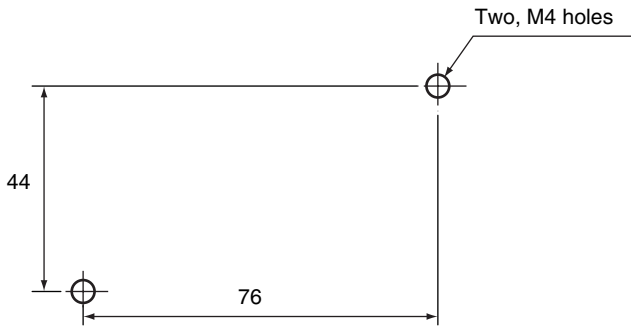

(Unit: mm)

Refer to *RF Tag Installation Precautions* in *Section 11 Appendices* for information on the effect of surrounding metal, Mutual Interference of RF Tags and Influence of Inclination on the V680S-D2KF68M.

p.253

Refer to *RF Tag Installation Precautions* in *Section 11 Appendices* for information on the effect of surrounding metal, Mutual Interference of RF Tags and Influence of Inclination on the V680S-D8KF68M.

p.253

CHECK!

You can use the V680S-D8KF68M with Reader/Writers with firmware version 2.00 or higher.

Connections and Wiring

Connecting and Removing the Reader/Writer Power Cable and Ethernet Cable

■ Connecting Method

1. Hold onto the connector on the Power Cable and insert it into the power connector on the Reader/Writer.

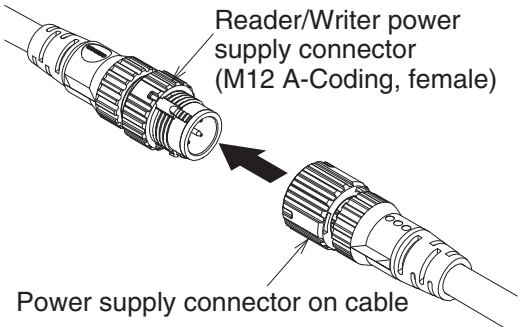

CHECK! Do not apply more than 30 N of force to the connector on the Reader/Writer.

2. Turn the connector on the Power Cable clockwise to lock it in place.

Recommended tightening torque: 0.39 to 0.49 N·m

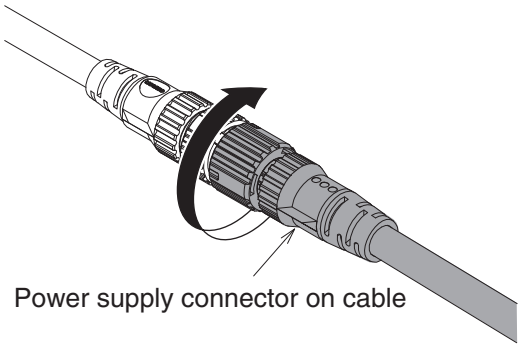

▪ Contact arrangement of the Reader/Writer's power connector

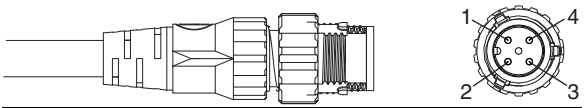

Pin No.	Name	Description	I/O
1	24P	+24 V	---
2	CONT	Control signal (operating mode signal) * Run Mode: Connect to +24 V and then start the Reader/Writer. Safe Mode: Connect to 0 V and then start the Reader/Writer.	IN
3	24N	0 V	---
4	-	-	---
Pin No.	Name	Description	I/O

Refer to *Operation Mode* in *Section 6 Functions* for information on the RUN mode, and Safe mode.
p.92

▪ Contact arrangement and wiring diagram of the recommended cable (Model XS5F-D42□-□80-F)

Contact arrangement

Wiring cable (Four-core type)

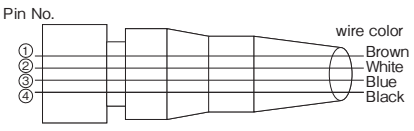

CHECK! Read and understand the power cable manual before attempting to connect the power cable.

3. Hold onto the connector on the Ethernet Cable and insert it into the Ethernet connector on the Reader/Writer.

CHECK!

Do not apply more than 30 N of force to the connector on the Reader/Writer.

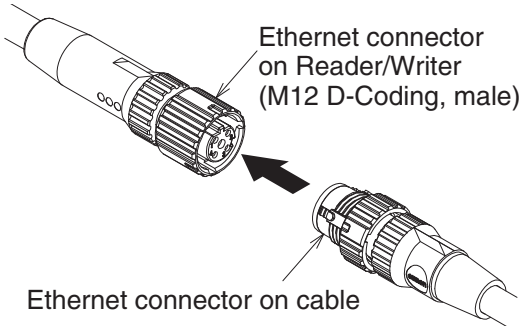

4. Turn the connector on the Ethernet Cable clockwise to lock it in place.

Recommended tightening torque: 0.39 to 0.49 N·m

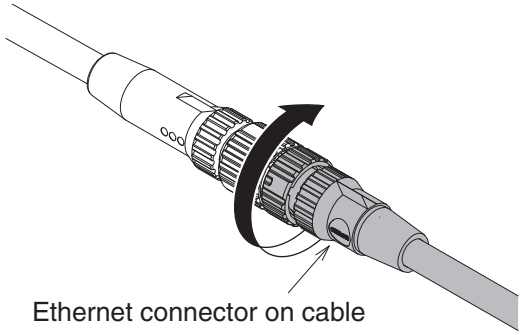

▪ Contact arrangement of the Reader/ Writer's Ethernet connector

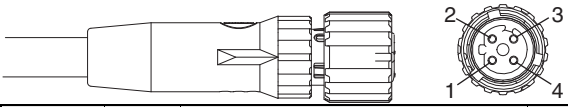

Pin No.	Name	Description	I/O
1	TD+	Ethernet send signal +	OUT
2	RD+	Ethernet receive signal +	IN
3	TD-	Ethernet send signal -	OUT
4	RD-	Ethernet receive signal -	IN
Housing	FG	Frame ground	---

5. Mount the Branch Cable with one M4 screw.

CHECK!

Recommended tightening torque: 0.39 to 0.49 N·m

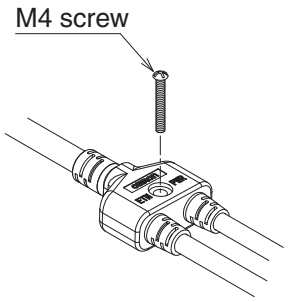

■ Removal Method

1. Turn the connector on the Power Cable counterclockwise to unlock it.

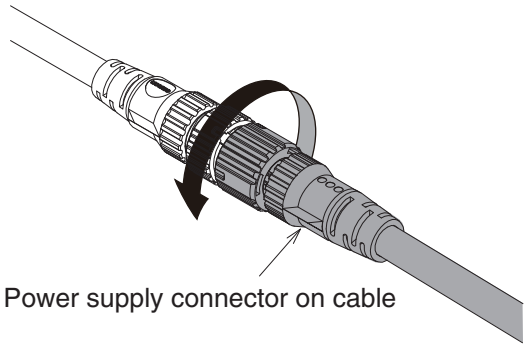

2. Hold onto the connector on the Power Cable and pull it straight out to remove it.

CHECK! If the connector is difficult to remove, press on the Reader/Writer and pull on the connector. Never pull on the Cable with excessive force. Doing so may break the wires and cause malfunction.

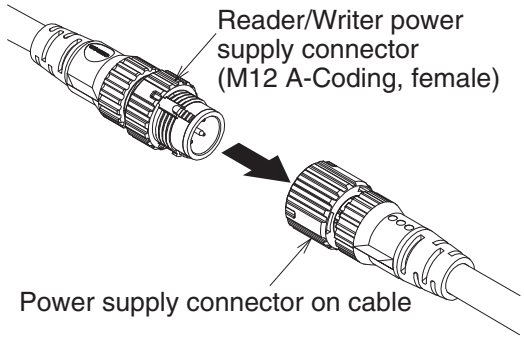

3. Turn the connector on the Ethernet Cable counterclockwise to unlock it.

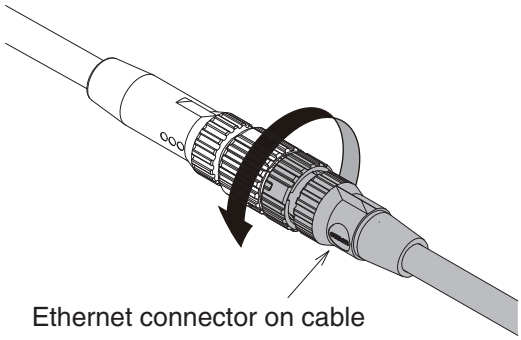

4. Hold onto the connector on the Ethernet Cable and pull it straight out to remove it.

CHECK! Never pull on the Cable with excessive force. Doing so may break the wires and cause malfunction.

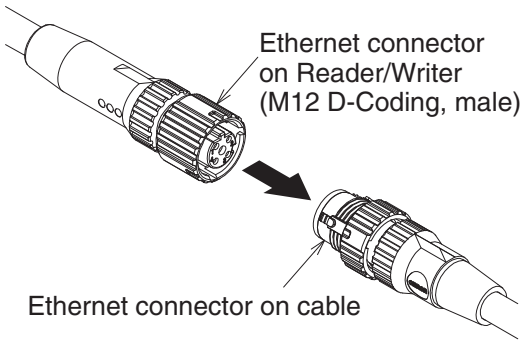

CHECK! Do not remove the cable bracket from the Reader/Writer.

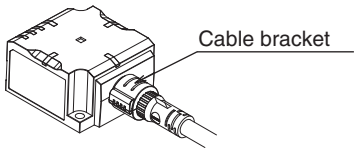

Section 5
Preparations for Communications

Starting the Reader/Writer	84
Reader/Writer Starting Procedure	84
Setting Communications Conditions	85
Preparations for Work	85
Setting the IP Address of the Reader/Writer from a Web Browser	87
Setting the IP Address of the Reader/Writer on the Engineering Tool	88
Setting Cyclic Data Exchanges	89

Starting the Reader/Writer

Reader/Writer Starting Procedure

1. Connect the Cable to the Reader/Writer.

Refer to *Connecting and Removing the Reader/Writer Power Cable and Ethernet Cable* in *Section 4 Installation and Connections* for the connector method.
p.80

2. Connect the power supply lines and the operation mode signal line in the Cable to the power source and connect the RJ45 connector to an Ethernet port on the host device.

3. Turn ON the power supply to start the Reader/Writer.
If the Reader/Writer starts normally, the RUN indicator will fast flashing green.

Setting Communications Conditions

Preparations for Work

1. Network Configuration

The network configuration that is described in this manual is shown in the following figure.
Connect the Reader/Writer and the computer with an Ethernet Cable.

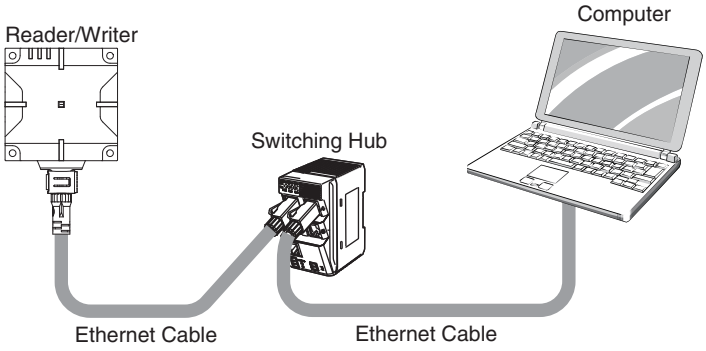

2. Set the IP address on the computer.

Set the IP addresses on the computer. The default IP addresses of the Reader/Writer are given in the following table. Use these addresses to set the IP address on the computer. This example changes the last part of the IP address to a value other than 200 (i.e., to 1 to 199 or 201 to 254). Values of 0 and 255 cannot be used.

▪ Default IP Addresses of the Reader/Writer

Setting	Default setting
IP address	192.168.1.200 (fixed setting)
Subnet mask	255.255.255.0 (fixed setting)
Default gateway	192.168.1.254 (fixed settings)

■ Setting the IP Address on the Computer with Windows 7 or Windows 10

1. Open the Control Panel, and select Network and Internet and then Network and Sharing Center.

2. Select Change adapter settings and then right-click Local Area Connection.

3. Right-click Local Area Connection and select Properties.

4. Select Internet Protocol Version 4 (TCP/IPv4) and then click the Properties Button.

5. Select the Use the following IP address Option, make the following settings, and then click the OK Button.

- Host Device Setting Example

IP address : 192.168.1.100
Subnet mask : 255.255.255.0

CHECK!

This example changes the last part of the IP address of the host device to a value other than 200 (i.e., 1 to 199 or 201to 254). Values of 0 and 255 cannot be used.

6. Click the OK Button to close the Internet Protocol Version 4 (TCP/IPv4) Properties Dialog Box.

Setting the IP Address of the Reader/Writer from a Web Browser

1. Start the Web browser.

Enter the IP address of the Reader/Writer in the address field of the Web browser to display the Web Browser Operation Window.

Enter http://192.168.1.200 if you are using the default IP address.

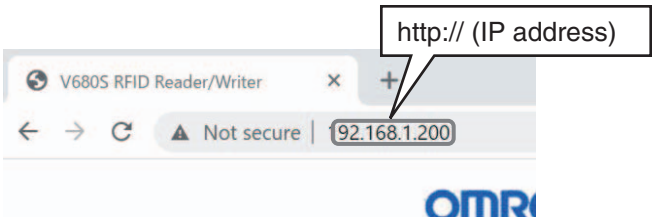

2. Set the IP address of the Reader/Writer.

Click the **Network settings** Button at the upper left of the Web Browser Operation Window.

Enter the IP address, subnet mask, and gateway address, and then click the **Set** Button.

▪ Setting a Fixed IP Address

On the Network Settings View, select the *Fixed settings* Option, enter the IP address, subnet mask, and gateway address, and then click the **Set** Button.

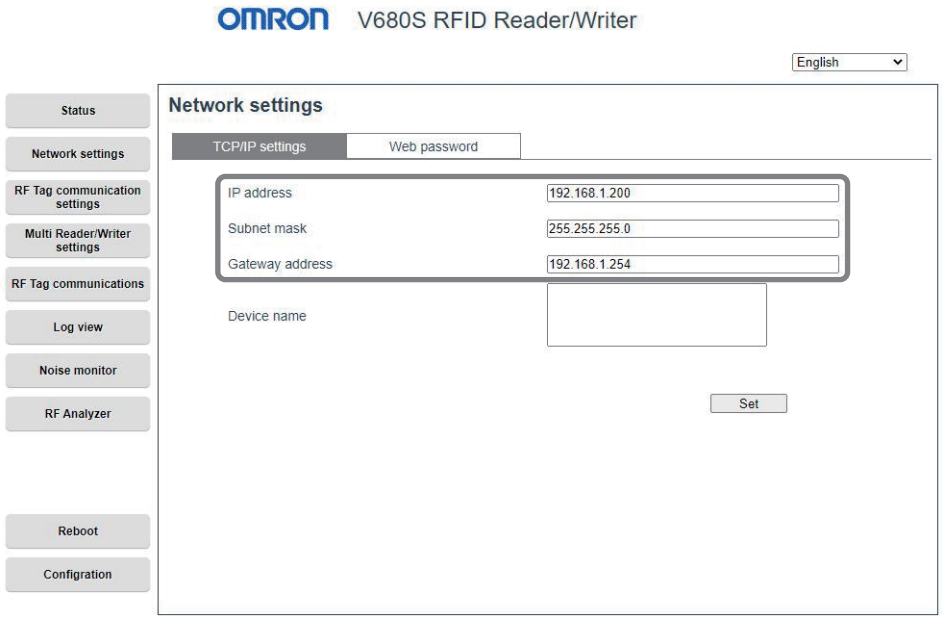

Setting the IP Address of the Reader/Writer on the Engineering Tool

You can also use the Engineering Tool to set the IP address for the Reader/Writer. Refer to the manual for your Engineering Tool for the specific procedure to set the IP address with the Engineering Tool.

If you assign the IP addresses of the Reader/Writer from the IO controller, the IP addresses that are specified for the following Reader/Writer functions will change dynamically and may result in unexpected operation. Confirm that no problems will occur before you assign the IP addresses from the IO controller.

- IP address of the copy destination Reader/Writer for the data copy function
- IP addresses of the Slave Reader/Writers for multi-Reader/Writer operation

Setting Cyclic Data Exchanges

Refer to *Section 7 Setting Up Cyclic Data Exchanges*.
p.148

MEMO

Section 6
Functions

Operation Mode 92
- Run Mode 92
- Safe Mode 92

RF Tag Communications 93
- Communications Options 93
- Normal RF Tag Communications 98
- Tag Memory Management 98

Reader/Writer Controls 100
- RESET 100

Maintenance 101
- Reading Device Information 101

Setting Functions 102
- Initialization 102
- Setting Communications Conditions 103
- Network Settings 105

Error Logs 106
- System Error Log 106
- Command Error Log 106

Web Server 107
- Status Monitoring, Setting, and Confirmation 107
- Convenient Functions 107

RFID System Maintenance 108
- Communication Diagnostic 108
- RF Analyzer 111

Multi-Reader/Writer Operation 113
- Field Extension Mode 115
- Traveling Mode 116

Using Communication Diagnostic and the RF Analyzer 118
- Using the Web Server 118

Using Multi-Reader/Writer Operation 124
- Using Field Extension Mode 124
- Enabling Field Extension Mode 125
- Using High-speed Traveling Mode 135

Operation Mode

The Reader/Writer has two operation modes: Run Mode, and Safe Mode.
You can use the control signal to the Reader/Writer connector to change between these modes.

Run Mode

When you connect the control signal to the 24-VDC side of the power supply and turn ON the power supply, the Reader/Writer will start in Run Mode.
Operation is performed in the modes specified in the commands from the host device and the results are returned to the host device as responses.

Safe Mode

When you connect the control signal to the 0-VDC side of the power supply and turn ON the power supply, the Reader/Writer will start in Safe Mode. The Safe Mode is used when you do not remember the IP address that is set in the Reader/Writer. In Safe Mode, the Reader/Writer will start with the following IP settings.
IP address: 192.168.1.200
Subnet mask: 255.255.255.0

RF Tag Communications

Communications Options

Communications with the RF Tag are performed according to one of the communications options that are listed in the following table.

The setting of the communications option is effective immediately after it is changed. It is saved in internal memory in the Reader/Writer even after the power supply is turned OFF.

Name	Description
Once	When the Reader/Writer receives a command, it communicates with an RF Tag and returns a response.
Auto	After the Reader/Writer receives a command, the Reader/Writer automatically detects an RF Tag that enters the communications field and communicates with it. Communication can be carried out without confirming the existence of an RF tag by a sensor or the like.
Repeat	When the Reader/Writer receives a command, it repeatedly communicates with RF Tags and returns a response when communicating with an RF Tag was possible. Until the Reader/Writer communicates with another RF tag, the Reader/Writer cannot communicate with the RF tag once communicated.
FIFO Repeat	When the Reader/Writer receives a command, it repeatedly communicates with RF Tags and returns a response when communicating with an RF Tag was possible. The Reader/Writer can communicate with the another RF tag when the new RF tag comes in the communication area, because the Reader/Writer stops the operation of the RF tag once communicated. The Reader/Writer does not communicate with the RF tag once communicated until the following conditions are satisfied. •The RF tag goes out of the communication area. •The Reader/Writer communicates with another RF tag. FIFO Repeat has the following two setting modes. •Without ID code check Repeat communication with RF tags without ID code check. Compared “With ID code check”, communication time becomes shorter. However, if the next tag enters the communication area during communication processing with the RF tag, there is a possibility of reading the data of the next RF tag. It is the same communication function as the FIFO repeat of the Reader/Writer of firmware version “3.01 or earlier”. •With ID code check Repeat Communication with RF tag is processed with ID code check. Even if the next tag enters the communication area during communication processing with the RF tag, it will not read the data of the next RF tag. RF tags can be installed at narrow pitch. However, compared with “Without ID code check”, communication time will be longer. Therefore, in order to ensure reliable communication with the RF tag you want to communicate, we recommend “With ID code check”. It can be used with a Reader/Writer with firmware version “3.02 or later”.

CHECK!

“ID code” is a unique ID previously stored in each RF tag. By performing ID code check, even if an RF tag with another ID code enters the communication area during communication processing, it does not communicate with that RF tag.

Refer to *RF Tag Communications Time (for Reference Only)* in *Section 11 Appendices* for details of Communications Time.
p.244

■ Once

The Reader/Writer communicates with RF Tags for command execution requests from the host device. When the Reader/Writer is finished communicating with an RF Tag, it returns the communications results to the host device and waits for another command.

If there is no RF Tag in the communications field when the Reader/Writer receives the command from the host device, an RF Tag missing error will occur. It is therefore necessary to use a sensor or other device to detect the presence of an RF Tag before you request command execution.

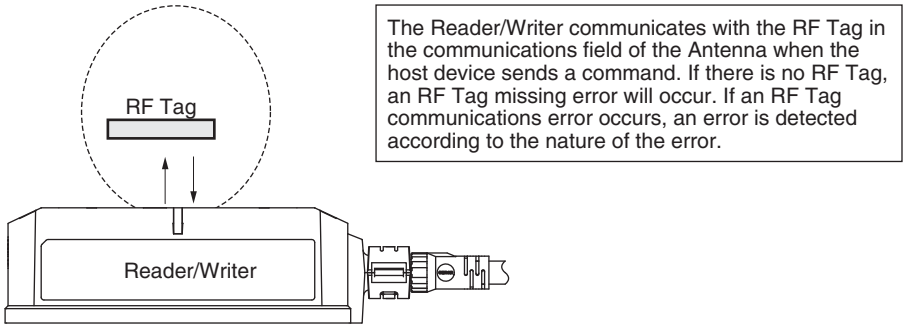

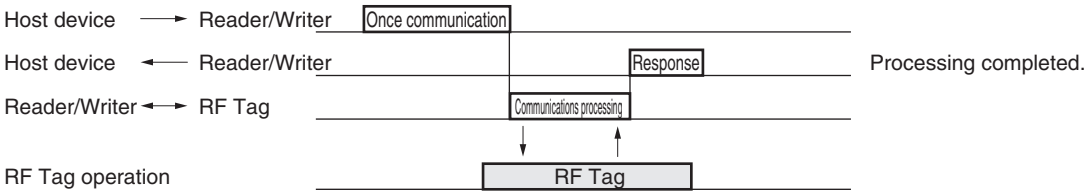

Refer to *Time Charts* in *Section 7 Host Communications Specifications* for details of Time charts of each communications options.
p.180

■ Auto

The Reader/Writer automatically detects an RF Tag and communicates with it.

After the host device sends the command, the Reader/Writer automatically detects an RF Tag that enters the communications field and communicates with it.

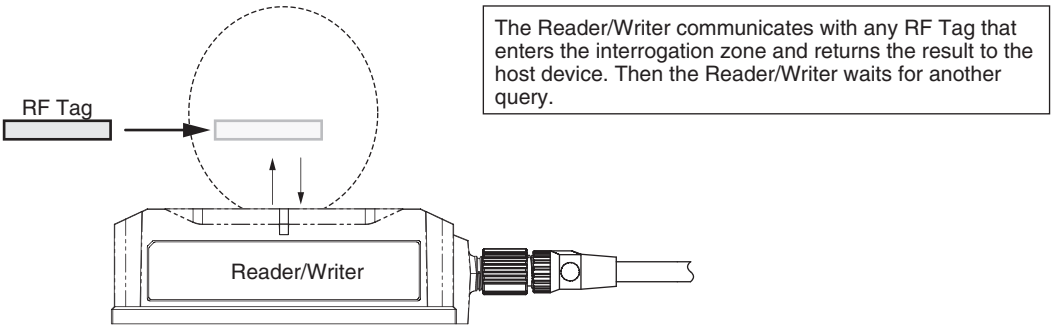

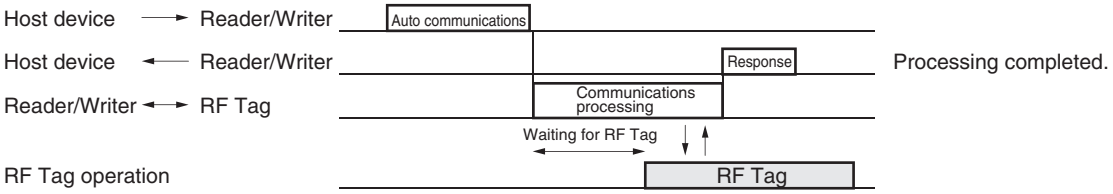

Refer to *Time Charts* in *Section 7 Host Communications Specifications* for details of Time charts of each communications options.
p.181

■ Repeat

When the Reader/Writer receives a command execution request from the host device, it automatically detects RF Tags in the communications field and communicates with them. This process is repeated until the execution request is cleared.

Communications are not performed for RF Tags that have returned communications results to the host device until the Reader/Writer has to communicate with another RF Tags.

You can use this specification to perform communications with RF Tags in order as they move past the Reader/Writer. However, if there is more than one RF Tag in the communications field of the Antenna at the same time, normal communications will not be possible. Make sure that there is never more than one RF Tag in the communications field of the Antenna at the same time.

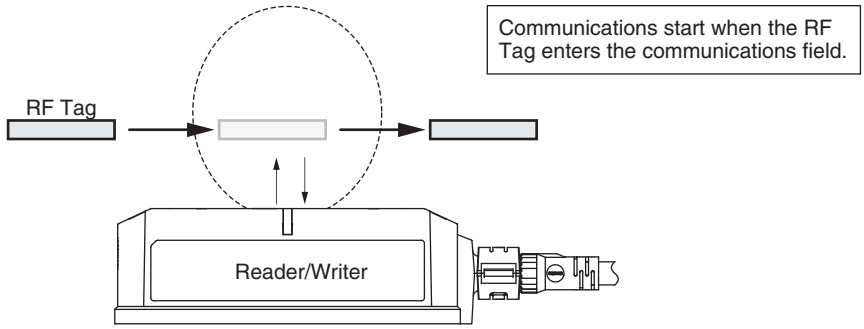

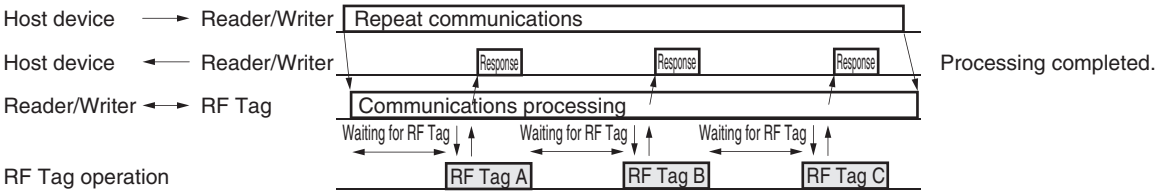

CHECK!

When the communications option is “Repeat”, no notice (error response) is sent to the host device even if an RF Tag missing error communications error or occurs.

Refer to *Time Charts* in *Section 7 Host Communications Specifications* for details of Time charts of each communications options.
p.182

■ FIFO Repeat

When the Reader/Writer receives a command execution request from the host device, it automatically detects RF Tags in the communications field and communicates with them. After successfully communicating with an RF Tag once, operation for that RF Tag is stopped. This process is repeated until the execution request is cleared.

The Reader/Writer does not communicate with the RF tag that has completed communication until the RF tag is out of the communication area.

The Reader/Writer does not communicate with the RF tag once communicated until the following conditions are satisfied.

•The RF tag goes out of the communication area.

•The Reader/Writer communicates with another RF tag.

You can use the FIFO Repeat communications option to perform communications with RF Tags in order as they move past the Reader/Writer even when there is limited space between the RF Tags. If there is more than one RF Tag for which operation is possible in the communications field of the Antenna at the same time, normal communications will not be possible. Make sure that there is never more than one RF Tag for which operation is possible in the communications field of the Antenna at the same time.

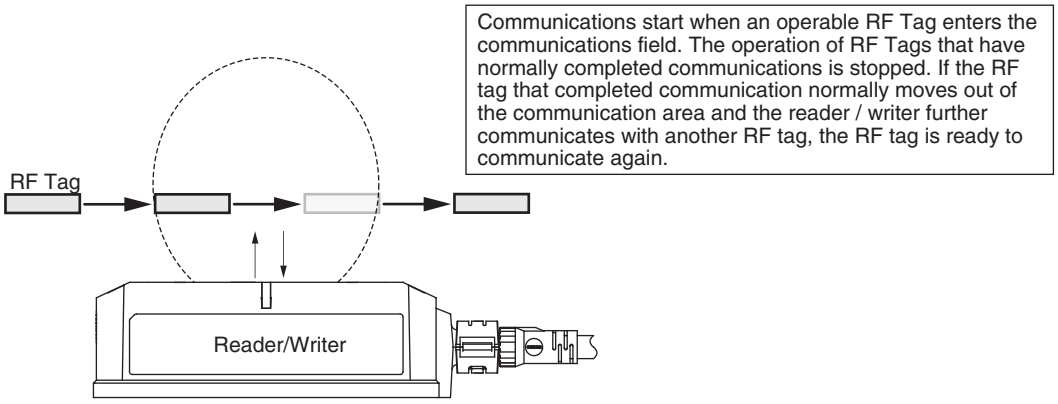

CHECK!

FIFO Repeat communications cannot be used for communicating with V680-D1KP□□ RF Tags.

CHECK!

When the communications option is “FIFO Repeat”, no notice (error response) is sent to the host device even if an RF Tag missing error or communications error occurs.

Refer to *Time Charts* in *Section 7 Host Communications Specifications* for details of Time charts of each communications options.

p.182

The FIFO Repeat detects the RF tag in the sequence of “1. RF tag detection processing” and executes read/write with the RF tag detected in the sequence of “2. communication processing”.

<Without ID code check>

When using FIFO Repeat (Without ID code check), please do not put the next RF tag B in the communication area until communication with the detected RF tag is completed. (See the figure below) *

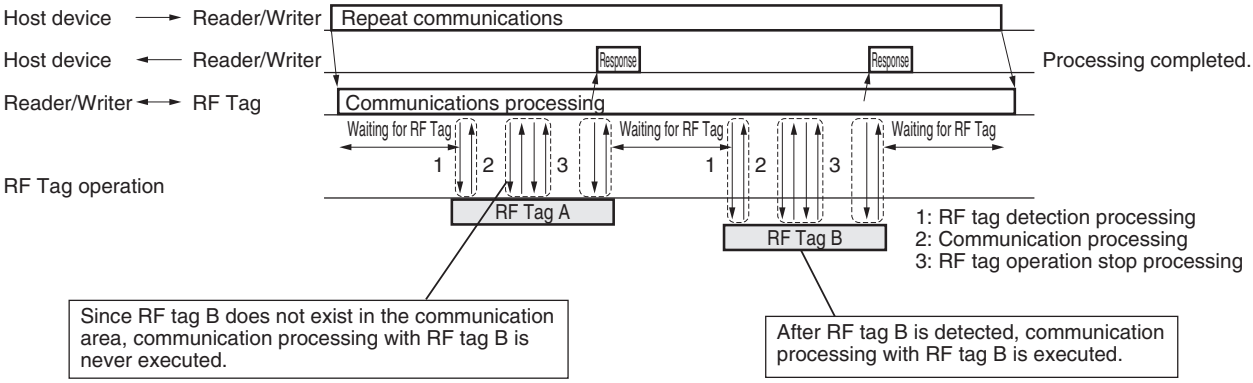

* When using FIFO Repeat (Without ID code check), the ID code of the RF tag is not checked. Therefore communication time will be shorter than FIFO Repeat (With ID code check). However, if the next RF tag enters the communication area during “2. communication processing” with the detected RF tag, there is a possibility of reading / writing the next RF tag.

<With ID code check>

When FIFO Repeat (With ID code check) is used, even if the next RF tag enters the communication area before communication with the detected RF tag is completed, it can read / write without any problem I will. *

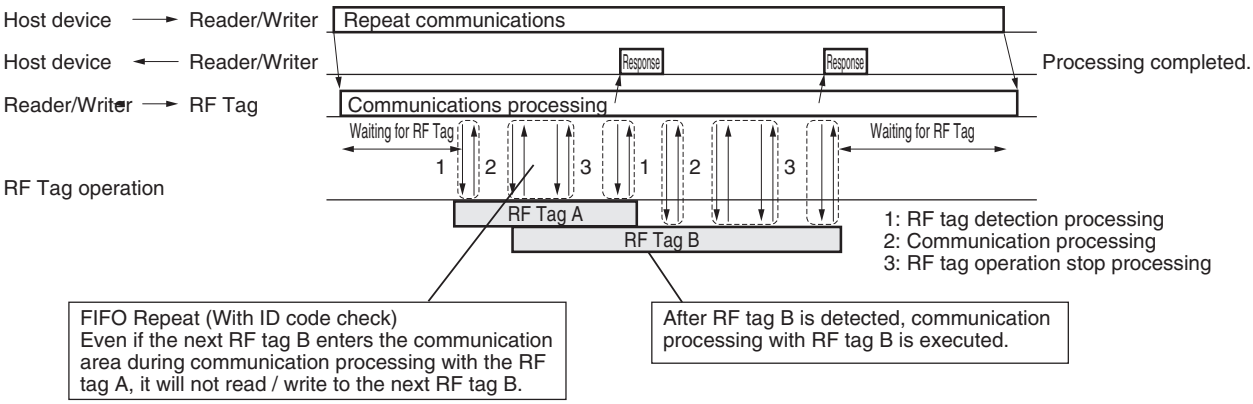

* When using FIFO Repeat (With ID code check), the ID code of the RF tag is checked. Even if the next RF tag enters the communication area during “2. communication processing” with the detected RF tag, there is no possibility of reading / writing the next RF tag. However, compared with “Without ID code check”, communication time will be longer.

CHECK!

“ID code” is a unique ID previously stored in each RF tag. By performing ID code check, even if an RF tag with another ID code enters the communication area during communication processing, it does not communicate with that RF tag.

Refer to *RF Tag Communications Time (for Reference Only)* in *Section 11 Appendices* for details of Communications Time.
p.244

Normal RF Tag Communications

The commands in the following table perform communications with RF Tags.

Name	Description	Page
READ DATA	Reads data from an RF Tag.	p.155
WRITE DATA	Writes data to the memory of the RF Tag.	p.156
READ ID	Reads the RF Tag's ID code.	p.154
DATA FILL	Writes the specified data to the specified number of words beginning from the specified start address. The specifications are made in the command.	p.158
LOCK	Locks the specified memory block in the RF Tag. It will no longer be possible to write data to the locked memory block. The lock cannot be released.	p.157
COPY DATA	Reads data from the memory of an RF Tag using one Reader/Writer (A) and writes it to the memory of the RF Tag in the communications field of another Reader/Writer (B).	p.161

Tag Memory Management

▪ RF TAG OVERWRITE COUNT CONTROL Command

The RF TAG OVERWRITE COUNT CONTROL command is used to determine whether the RF Tag overwrite limit has been exceeded.

- With the RF TAG OVERWRITE COUNT CONTROL command with a subtraction specification, the overwrite count is subtracted from the data in the user-specified overwrite count control area to determine whether the number of overwrites has been exceeded.
- With the RF TAG OVERWRITE COUNT CONTROL command with an addition specification, the overwrite count is added to the data in the user-specified overwrite count control area to determine whether the number of overwrites has exceeded 100,000. The RF TAG OVERWRITE COUNT CONTROL command with an addition specification is used only for RF Tags with a overwrite life of 100,000 writes.

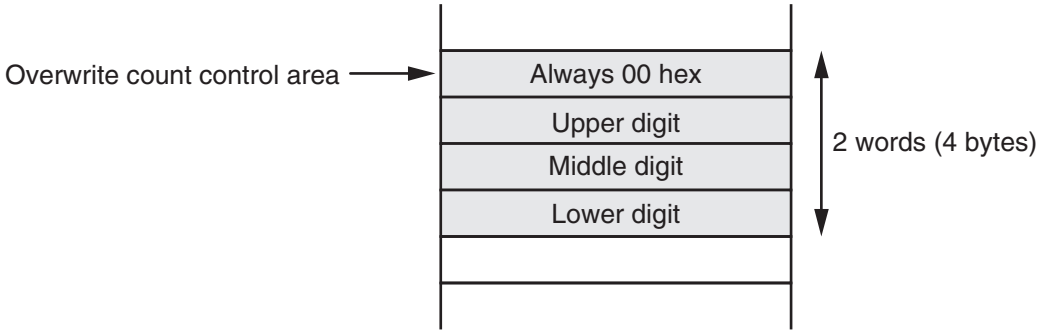

RF TAG OVERWRITE COUNT CONTROL Command with a Subtraction Specification

The overwrite count control area consists of 4 bytes from the specified start address. The decrement value is subtracted from the overwrite count and then written to this area. When the value reaches 0 (i.e., 00 hex), a warning code is returned. Therefore, to enable control of the number of overwrites, the maximum number of overwrites must be written to the overwrite count control area beforehand. You can set any number of overwrites up to 16,700,000.

You can read the overwrite count control area with a read command. If the control area data is already 0, the control area value will not be refreshed, and a warning code will be returned as a response. When the refresh count is set to 0000 hex, the count will not be updated, and only an overwrite count check will be performed.

RF TAG OVERWRITE COUNT CONTROL Command with a Addition Specification

The overwrite count control area consists of 4 bytes from the specified start address. The increment value is added to the overwrite count and then written to this area. When the value reaches 100,000 (i.e., 0186A0 hex), a warning code is returned. You can read the overwrite count control area with a read command. If the control area data is already 100,000, the control area value will not be refreshed, and a warning code will be returned as a response. When the refresh count is set to 0000 hex, the count will not be updated, and only an overwrite count check will be performed.

Reader/Writer Controls

RESET

You can restart the Reader/Writer.

You can restart the Reader/Writer by using a RESET command or by performing a reset with the DCP protocol from a Web browser. The Reader/Writer will return the execution results and reset itself.

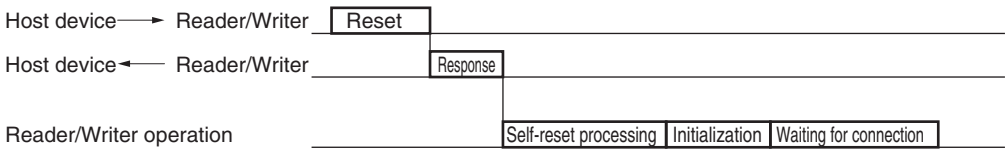

CHECK! If you reset the Reader/Writer during cyclic data exchanges, the connection will be broken and must be re-established from the IO controller.

CHECK! If the Reader/Writer is reset with the DCP protocol, it will be restored to the default settings.
All of the network settings will be restored to zeros, including the IP address, subnetwork, and default gateway. Use the IP address settings with the DCP protocol to reset the IP address as required.

Maintenance

Reading Device Information

You can read the device information given in the following table from the Reader/Writer.
You can send a command from the host device or access the information from a Web browser to read the device information.

Device information	Description
Model	Gives the model number of the Reader/Writer.
Firmware version	Gives the firmware version in the Reader/Writer.
MAC address	Gives the MAC address that is assigned to the Reader/Writer. * Not supported for the command.
Reader/Writer operating status	Gives the operating status of the Reader/Writer. The operating status include idle (waiting for a command), communicating, other processing, etc. * Not supported for the command.
Operating time	Gives the elapsed time in milliseconds since the Reader/Writer was started. * 0 to 4,294,967,295 (FFFF FFFF hex)

■ Noise Measurement

Communication performance will be reduced when the RF tag or the Reader/Writer are influenced by ambient noise. The Reader/Writer responds the ambient noise level by using noise monitor function. The response data includes the following parameters. By checking the noise level, you can check the influence on the performance of communication with the RF tag in advance. You can also check the noise level when the trouble occurs.

Noise level (Average)	This represents the average value of the measured noise level. 00 to 99
Noise level (Maximum)	This represents the Maximum value of the measured noise level. 00 to 99
Noise level (Minimum)	This represents the minimum value of the measured noise level. 00 to 99

The noise monitor can be performed by means of the following two.

Measuring Noise with a Command from the Host Device

You can send the MEASURE NOISE command to the Reader/Writer to obtain the numerical ambient noise level around the Reader/Writer.

Refer to *MEASURE NOISE* in *V680S Commands* in *Section 7 Host Communications Specifications* for details on the MEASURE NOISE command.

p.173

Noise measurement using Web browser.

You can check the transition graph of the noise level using Web browser.
By selecting the type of the RF tag, you are also able to visually confirm the stability of communication.

Refer to *Noise Monitor View* in *Section 8 Web Browser Interface* for more information.

p.196

If the noise level that was confirmed by Web browser screen may affect the performance of communication, do the following actions.

- If the other Reader/Writers are operating close to the Reader/Writer, ensure the distance between the Reader/Writers.

p.248, p.249, p.251

- If the equipment close to the Reader/Writer, become a source of noise transceivers, motors, inverters, and switching power supply is running, ensure the distance until the amount of noise is sufficiently reduced. Take action, such as enclosing the noise source by metal object.

Setting Functions

You can use a setting command or a Web browser to set the operating conditions of the Reader/Writer according to the application environment.
You can save the settings so that they are stored in internal memory in the Reader/Writer even after the power supply is turned OFF.
Only the settings that are made with the SET TAG COMMUNICATIONS CONDITIONS command are effective immediately after they are changed. For any changes to all other settings, you must first save them and then reset the Reader/Writer to enable using them.

Refer to *SET MULTI-READER/WRITER OPERATION* in *V680S Commands* in *Section 7 Host Communications Specifications* for details on the setting command.
p.166

Refer to *RF Tag Communications View* in *Network Settings View* in *Section 8 Web Browser Interface* for the setting procedure for the Web browser interface.
p.190, p.194

Initialization

Initialization returns all of the set values in the Reader/Writer to their default values.

Setting Communications Conditions

This command sets parameters that are related to the operation of communications with RF Tags. Any changes to the settings that are made with this command are effective immediately. (There is no need to reset the Reader/Writer to save the settings.)

■ Communications Option Setting

You can set the communications option of the Reader/Writer to Once, Repeat, or FIFO Repeat.

Name	Description
Once	When the Reader/Writer receives a command, it communicates with an RF Tag and returns a response.
Auto	After the Reader/Writer receives a command, the Reader/Writer automatically detects an RF Tag that enters the communications field and communicates with it. Communication can be carried out without confirming the existence of an RF tag by a sensor or the like.
Repeat	When the Reader/Writer receives a command, it repeatedly communicates with RF Tags and returns a response when communicating with an RF Tag was possible. Until the Reader/Writer communicates with another RF tag, the Reader/Writer cannot communicate with the RF tag once communicated.
FIFO Repeat	When the Reader/Writer receives a command, it repeatedly communicates with RF Tags and returns a response when communicating with an RF Tag was possible. The Reader/Writer can communicate with the another RF tag when the new RF tag comes in the communication area, because the Reader/Writer stops the operation of the RF tag once communicated. The Reader/Writer does not communicate with the RF tag once communicated until the following conditions are satisfied. •The RF tag goes out of the communication area. •The Reader/Writer communicates with another RF tag. FIFO Repeat has the following two setting modes. •Without ID code check Repeat communication with RF tags without ID code check. Compared “With ID code check”, communication time becomes shorter. However, if the next tag enters the communication area during communication processing with the RF tag, there is a possibility of reading the data of the next RF tag. It is the same communication function as the FIFO repeat of the Reader/Writer of firmware version “3.01 or earlier”. •With ID code check Repeat Communication with RF tag is processed with ID code check. Even if the next tag enters the communication area during communication processing with the RF tag, it will not read the data of the next RF tag. RF tags can be installed at narrow pitch. However, compared with “Without ID code check”, communication time will be longer. Therefore, in order to ensure reliable communication with the RF tag you want to communicate, we recommend “With ID code check”. It can be used with a Reader/Writer with firmware version “3.02 or later”.

CHECK!

“ID code” is a unique ID previously stored in each RF tag. By performing ID code check, even if an RF tag with another ID code enters the communication area during communication processing, it does not communicate with that RF tag.

Refer to *RF Tag Communications Time (for Reference Only)* in *Section 11 Appendices* for details of Communications Time.

p.244

■ RF Tag Communications Speed Setting

You can set the speed for communications between the Reader/Writer and RF Tags.

High speed (default)	This setting reduces the communications time by reading more than one block at the same time with an air interface. However, if errors are detected during communications due to ambient noise or other factors, processing is redone from the beginning, which can actually increase the communications time.
Normal speed	This setting provides more stable communications quality by reading one block at a time, in the same way as for the earlier V680. Although the normal communications time is longer, processing can be continued during communications if errors are detected due to ambient noise or other factors, which can actually reduce the communications time.

■ Write Verification

You can set whether to verify write processing.

Enabled (default)	After processing a write operation, the memory area that was written in the RF Tag is read and verified to confirm that the write operation was performed normally.
Disabled	Write processing is not verified.

■ Communications Diagnostic

You can set whether to the communications diagnostic of the Reader/Writer.

Disable (default)	The Reader/Writer does not perform communications diagnostic.
Enable	This function diagnoses the communications leeway whenever the Reader/Writer communicates with an RF Tag, displays the results on an operation indicator, and reports the results to the host device. It will help you achieve a more stable Reader/Writer and RF Tag installation and enable monitoring the status of operations.

Network Settings

You can set the parameters for communications between the Reader/Writer and the host device. If you change the settings, you must reset the Reader/Writer to enable the new settings.

■ IP Address, Subnet Mask, and Default Gateway

You can use any of the following methods to set the IP address, subnet mask, and default gateway for the Reader/Writer.

■ Fixed IP Address Setting

Default setting: 192.168.1.200

■ Subnet Mask Setting

Default setting: 255.255.255.0

■ Gateway Address Setting

Default setting: 192.168.1.254

■ Setting the Web Password

You can set a password for logging in from a Web interface. The password can be up to 15 ASCII characters. No password is set by default.

If a Web password is set, a dialog box requesting entry of the password will be displayed when the initial Web server interface is displayed. If the correct password is entered, the normal Web interface can be used.

Error Logs

The Reader/Writer manages errors that occur during operation in logs. The error logs are saved until the power supply to the Reader/Writer is turned OFF. You can read the error logs by sending commands from the host device or by using a Web browser.

The following logs are saved.

Category	Description
System error log	This log contains up to eight fatal errors that were detected by the Reader/Writer. They are given in chronological order. If more than eight system errors occur, the oldest records are deleted in order.
Command error log	This log contains up to 16 errors detected for command execution for cyclic data exchanges. They are given in chronological order. If more than 16 errors occur, the oldest errors are deleted in order.

System Error Log

Each record in the system error log consists of 16 bytes in the format that is shown in the following table. Up to eight records are recorded. To read the system error log, either send a GET SYSTEM ERROR LOG command or read it from a Web browser.

Field	Size	Description
Operating time	4 bytes	This is the operating time of the Reader/Writer when the error occurred. * The operating time is the elapsed time in milliseconds from when the Reader/Writer was started.
Error code	4 bytes	This code is used to identify the error.
Attached information 1	4 bytes	These codes provide additional information on the error.
Attached information 2	4 bytes	

Refer to *Error Codes* in *Section 7 Host Communications Specifications* for detailed information on error codes, attached information 1, and attached information 2.

p.151

Command Error Log

Each record consists of 16 bytes in the format that is shown in the following table. Up to 16 records are recorded. To read the command error log, either send a GET COMMAND ERROR LOG command or read it from a Web browser.

Field	Size	Description
Operating time	4 bytes	Gives the operating time of the Reader/Writer when the error occurred. * The operating time is the elapsed time in milliseconds from when the Reader/Writer was started.
IP address of device that sent the command	4 bytes	Gives the IP address of the host device that sent the command.
Command code	2 bytes	Gives the command code of the command received by the Reader/Writer.
Error code	2 bytes	Gives the error code from the response returned by the Reader/Writer.
Response information 1	2 bytes	Gives response information 1 from the response returned by the Reader/Writer.
Response information 2	2 bytes	Gives response information 2 from the response returned by the Reader/Writer.

CHECK!

Errors that occur during RF Tag communications from a Web browser are not recorded in the command error log. Only errors that occur in command execution for cyclic data exchanges are recorded.

Refer to *Error Codes*, *Device Information*, and *Communications Diagnostics Results* in *Section 7 Host Communications Specifications* for detailed information on error codes, response information 1, and response information 2.

p.151, p.153, p.153

Web Server

The following functions are provided in the Web server interface.

Status Monitoring, Setting, and Confirmation

■ Status Monitoring

You can monitor the status of the Reader/Writer. The Reader/Writer status includes the firmware versions, MAC address, network settings, operating status, and other status information.

■ Setting

You can set any of the settable parameters from the Web server interface. This includes the network settings, RF Tag communications settings, etc.

■ Importing and Exporting Settings

You can import and export the Reader/Writer setting information. You can store or view the configuration file on a computer. You can use importing to simplify setting up more than one Reader/Writer and you can use exporting to store and restore settings information as a countermeasure for problems.

Convenient Functions

■ Simple Operation Test

You can send commands from the Web server interface to operate the Reader/Writer without any special software.

■ Utilities

You can display the results of noise measurements or error log information.

RFID System Maintenance

Communications performance can be affected by environmental factors around the RFID System (including metal objects, the positional relationship between the Reader/Writer and RF Tags, and noise). You can use the RFID System maintenance functions to check the leeway in communications and achieve more stable device operation.

Refer to *GET FIRMWARE VERSION* in *Section 7 Host Communications Specifications* for the procedure to check the firmware version.
p.171

CHECK!

You cannot use the maintenance functions if you are using the FIFO Repeat communications option.

Communication Diagnostic

This function diagnoses the communications leeway whenever the Reader/Writer communicates with an RF Tag, displays the results on an operation indicator, and reports the results to the host device. It will help you achieve a more stable Reader/Writer and RF Tag installation and enable monitoring the status of operations.

The operation indicator lights green for a stable communication, yellow for an unstable communication, and red for a communications error.

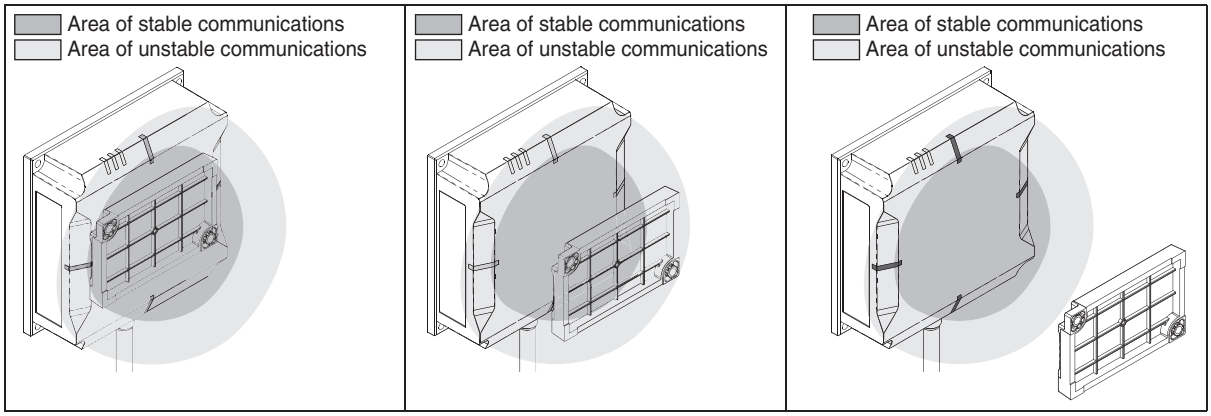

Yellow, which indicates an unstable communication, means that there is only 10% to 30% leeway in relation to the maximum communications range.

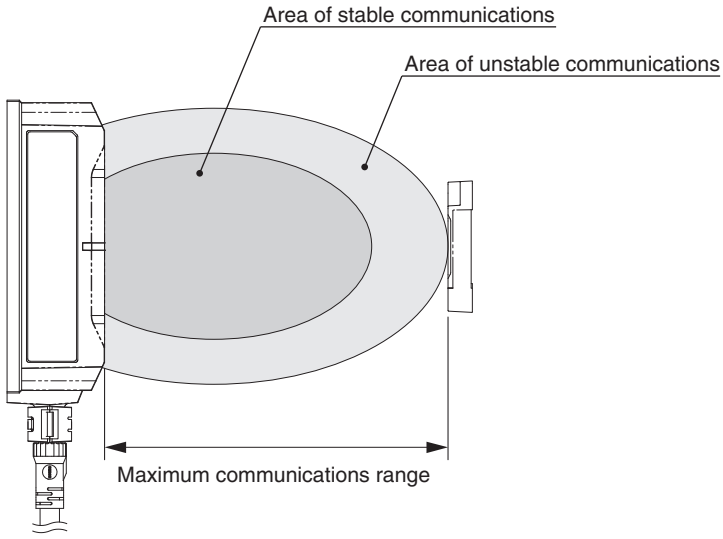

CHECK!

Communication diagnostic is disabled in the default settings. To use communication diagnostic, you must enable it in advance.
Refer to *RF Tag Communications View* in *Section 8 Web Browser Interface* for the setting procedure for communication diagnostic.
p.194

CHECK!

Use the results of communication diagnostic as a guideline.
An indication of a stable communication (green) does not necessarily mean that communications are normal.

CHECK!

Yellow, which indicates an unstable communication, does not necessarily mean that communications are not possible. It merely means that there is little leeway in communications.
If you want to ensure more stable communications, we recommend that you use the Reader/Writer so that stable communications (green) are indicated.

CHECK!

The communication time is approximately 200 ms longer when enabling Communication Diagnostic function.

You can use communication diagnostic to detect and diagnoses deterioration of performance for the following conditions.

Communications performance reduced by inclination of RF Tags

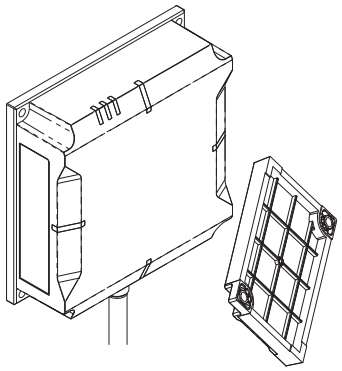

Communications performance reduced by positional offset of RF Tags

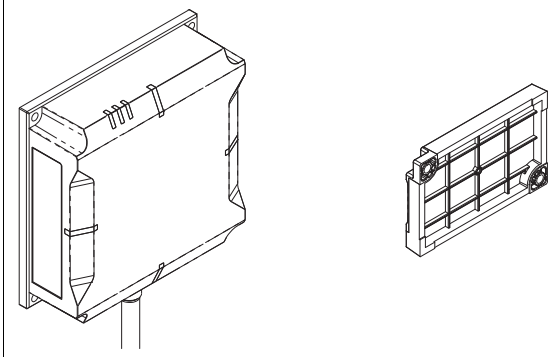

Communications performance reduced by metal objects

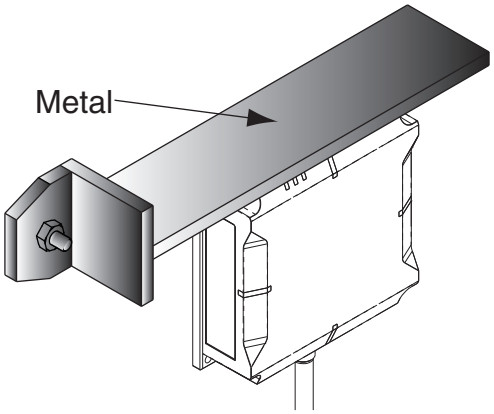

Communications performance reduced by an excessively long communications ranges

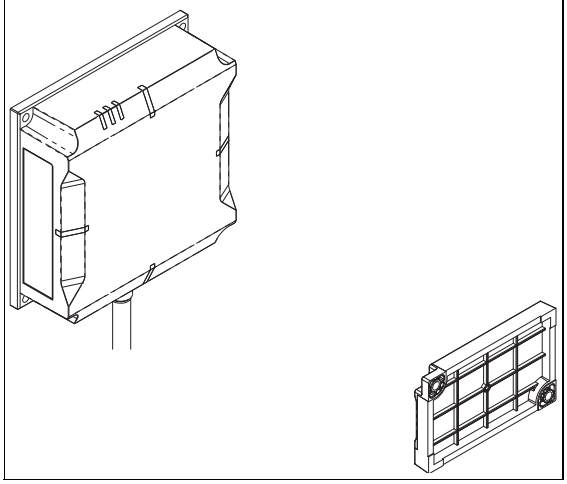

Communications performance reduced by noise

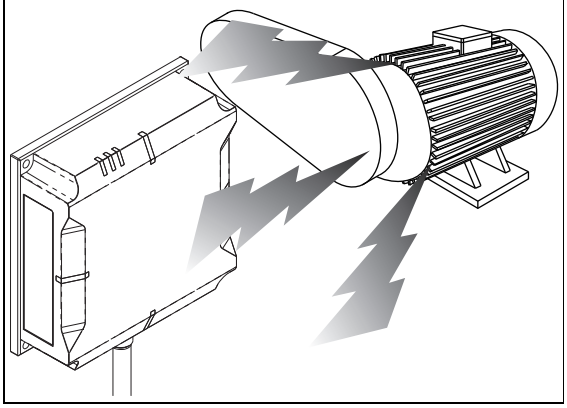

RF Analyzer

The RF Analyzer displays detailed information from communication diagnostic on a Web browser. You can easily check to see how stable communications are and troubleshoot problems.
You can browse a list of diagnostic information and periodically confirm the leeway quantitatively on graphs. You can download a log file that contains the diagnostic information stored in the Reader/Writer to a computer for your usage.

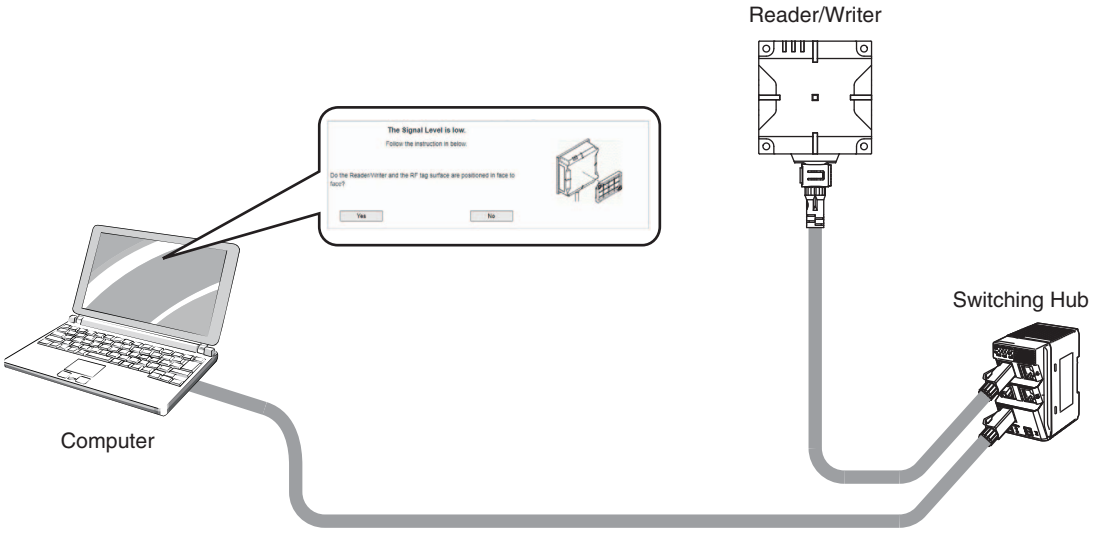

■ Diagnostic Information Table

You can display a table of the diagnostic information from communications between the Reader/Writer and RF Tags. (The table contains up to 2,048 records.) You can check the following items in the table.

Time	The Reader/Writer operating time when it communicated with the RF Tag
Command	The name of the command used to communicate with the RF Tag
Result	The diagnostic result (stable, unstable, or error)
Diagnostic information	The cause when a communication was unstable

Whenever a communication was unstable, a button to display details is displayed in the list. If you click this button, you can troubleshoot the cause with guidance displayed on the Web browser to help stabilize communications.

■ Diagnostic Information Graphs

You can display the diagnostic information quantitatively on a graph. You can check the following information on the graph.

Signal level	The communications signal level between the Reader/Writer and RF Tag is displayed in 10 levels on a vertical bar graph. The higher the value, the more stable the communications. A value of 10 means that communications are stable, and the bar is displayed in blue. A value of 1 to 9 means that communications are unstable, and the bar is displayed in yellow. A value of 0 indicates a communications error. Adjust the installation conditions to get the values as close to 10 as possible.
Noise level	The ambient noise level around the Reader/Writer that was detected in communications with RF Tags is displayed in 10 levels on a broken-line graph. The higher the value, the less stable the communications.

Refer to *RF Analyzer* in *Section 8 Web Browser Interface* for the operating procedures of the RF Analyzer.
p.197

An application example of the RFID System maintenance functions is given below.

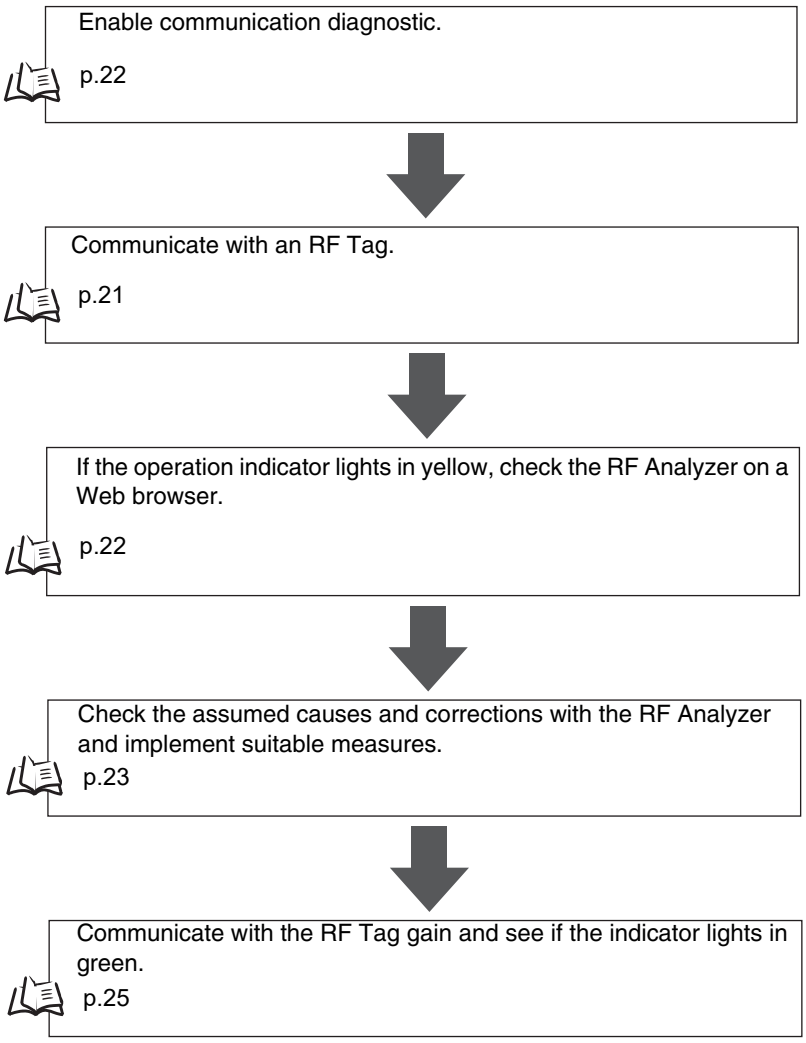

Multi-Reader/Writer Operation

There are two modes that you can use for multi-Reader/Writer operation: Field Extension Mode and High-speed Traveling Mode.
You can link up to eight Reader/Writers to perform communications operations with RF Tags. One of the Reader/Writers operates as the master and the other Reader/Writers operate as slaves.
The host device just has to control one Reader/Writer, the master, to easily achieve complex control operations for all of the linked Reader/Writers.

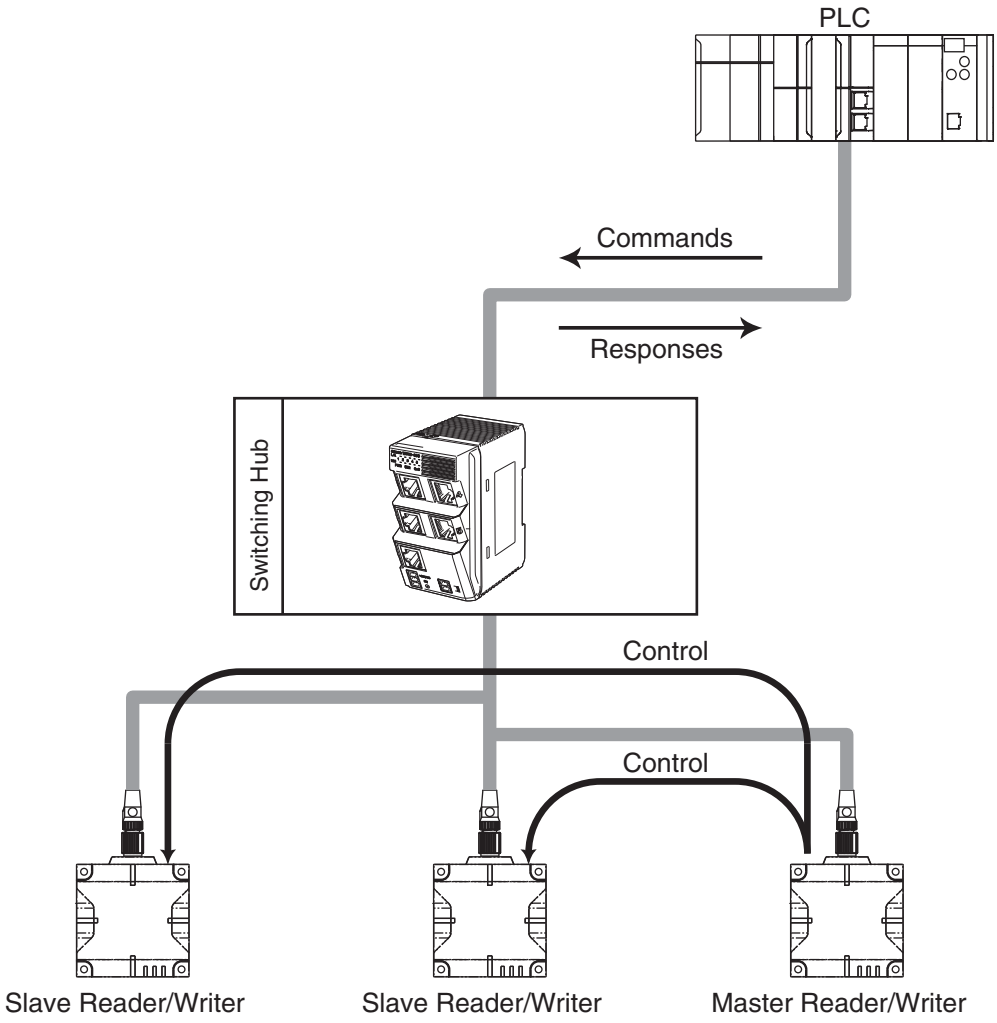

The RF Tag communications commands that you can use during multi-Reader/Writer operation (Field Extension Mode or High-speed Traveling Mode) are shown in the following table. If you use unsupported RF Tag communications commands when multi-Reader/Writer operation is enabled, an execution status error will be indicated in the response.

	Field Extension Mode	High-speed Traveling Mode
READ DATA	Supported	Supported
WRITE DATA	Supported	Not supported
DATA FILL	Not supported	Not supported
RF TAG OVERWRITE COUNT CONTROL	Not supported	Not supported
READ ID	Supported	Not supported
COPY	Not supported	Not supported
LOCK	Not supported	Not supported

The commands that can be acknowledged by a Slave Reader/Writer are shown in the following table. If an unsupported command is received by a Slave Reader/Writer, a multi-Reader/Writer execution error will occur.

	Name	Supported
RF Tag communications	READ DATA	No
	WRITE DATA	No
	READ ID	No
	COPY DATA	No
	DATA FILL	No
	LOCK	No
	RF TAG OVERWRITE COUNT CONTROL	No
	RESTORE DATA	No
Reader/Writer settings	SET TAG COMMUNICATIONS OPTION	No
	GET TAG COMMUNICATIONS OPTION	Yes
	SET TAG COMMUNICATIONS CONDITIONS	No
	GET TAG COMMUNICATIONS CONDITIONS	Yes
	SET TCP/IP COMMUNICATIONS CONDITIONS	No
	GET TCP/IP COMMUNICATIONS CONDITIONS	Yes
	SET DEVICE NAME	No
	GET DEVICE NAME	Yes
	SET WEB COMMUNICATIONS CONDITIONS	No
	GET WEB COMMUNICATIONS CONDITIONS	Yes
	SET WEB PASSWORD	No
	GET WEB PASSWORD	Yes
	INITIALIZE	No

	Name	Supported
Checking Reader/Writer information	MEASURE NOISE	No
	GET MODEL INFORMATION	Yes
	GET FIRMWARE VERSION	Yes
	GET MAC ADDRESS	Yes
	GET READER/WRITER OPERATING STATUS	Yes
	GET OPERATING TIME	Yes
	GET RECENT ERROR COMMAND INFORMATION	Yes
	GET COMMUNICATIONS ERROR LOG	Yes
	GET SYSTEM ERROR LOG	Yes
	GET RESTORE INFORMATION	Yes
Reader/Writer operation control	STOP	No
	RESET	No
RFID maintenance	SET COMMUNICATIONS DIAGNOSIS	No
	GET COMMUNICATIONS DIAGNOSIS SETTING	Yes
Multi-Reader/Writer operation	SET MULTI-READER/WRITER OPERATION	No
	GET MULTI-READER/WRITER SETTINGS	Yes
	GET MULTI-READER/WRITER OPERATION STATUS	Yes

Field Extension Mode

You can use this mode to link Reader/Writers in order to extend the effective communications field. Even if the workpieces are not all the same height or not oriented in the same direction, the placement of more than one Reader/Writer enables communicating with the RF Tags without worrying about the positions or orientation of the RF Tags.
This enables communications over a wide communications field and is therefore recommended for applications in which the locations or orientation of the RF Tags is not consistent.

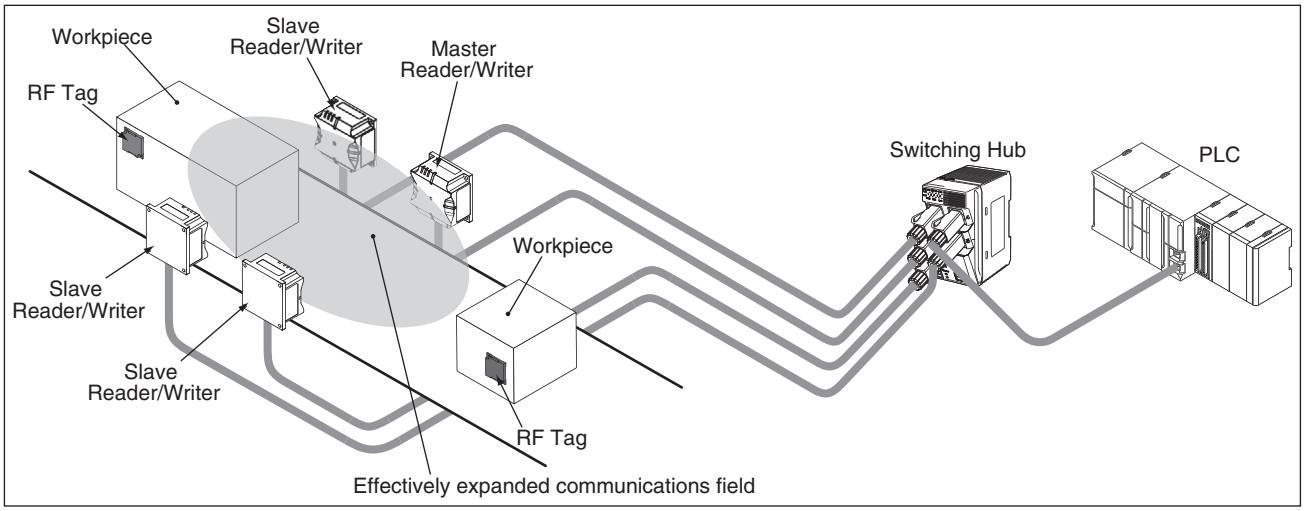

Communicating with RF Tags is possible without being affected by the orientation of the workpieces (i.e., the locations where the RF Tags are attached).

If you use Field Extension Mode, you can use only three RF Tag communications commands: READ DATA, WRITE DATA, and READ ID. Also, you can specify only the Once, Auto or Repeat communications option. If you use the FIFO Repeat communications option in Field Extension Mode, an execution status error will be indicated in the response.

Applicable RF Tag Communications Commands

	Supported
READ DATA	Yes
WRITE DATA	Yes
DATA FILL	No
RF TAG OVERWRITE COUNT CONTROL	No
READ ID	Yes
COPY	No
LOCK	No

Applicable Communications Options

	Supported
Once	Yes
Auto	Yes
Repeat	Yes
FIFO Repeat	No

CHECK!

In Field Extension Mode, the Reader/Writers do not simultaneously perform communications. The Reader/Writers individually perform communications on a time sharing basis.

Traveling Mode

You can read large data sizes from RF Tags because the data is split up and read by more than one Reader/Writer on a time-sharing basis while the workpiece is moving.
We recommend that you use this mode when reading data from RF Tags that are moving on a production line.

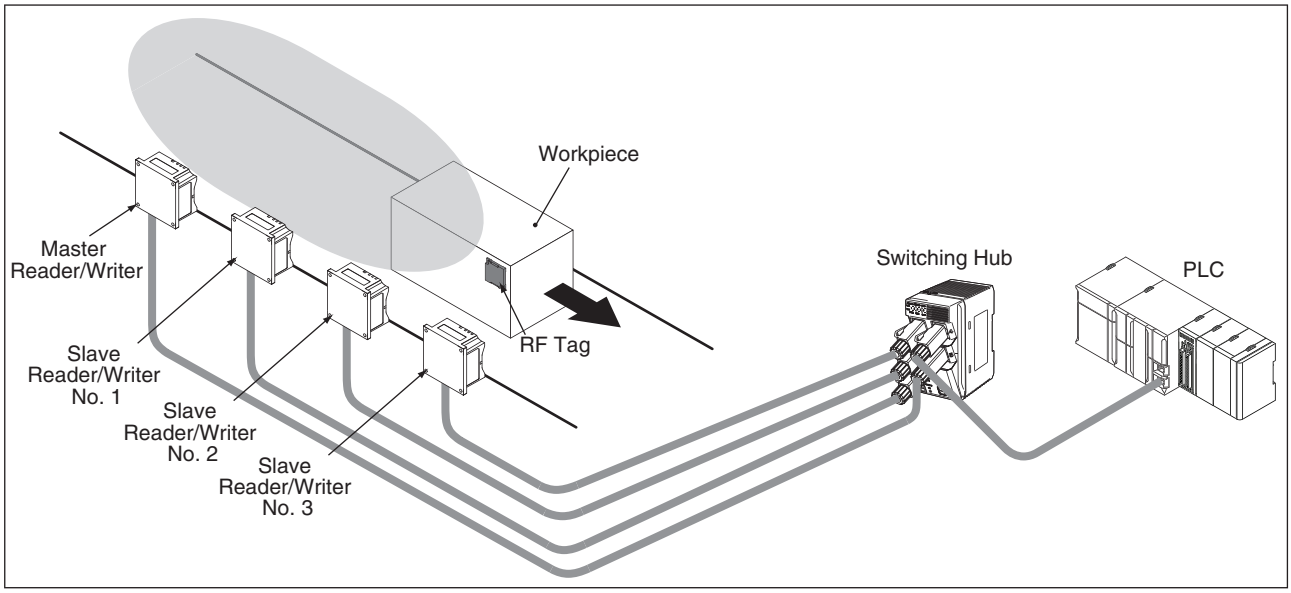

For example, if you link four Reader/Writers and each Reader/Writer can read only 25 words, you can read 100 words of data with the four linked Reader/Writers.

To use the High-speed Traveling Mode, the Master Reader/Writer and Slave Reader/Writers must be set according to their positions.
Read processing is executed in the following order.

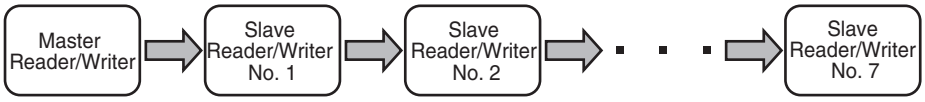

CHECK! Always set the first Reader/Writer to read data as the Master Reader/Writer. Then set the other Reader/Writers to read data in order from Slave No. 1, Slave No.2, etc.

CHECK! Refer to *RF Tag Communications Range (for Reference Only)* in *Section 11 Appendices* and install the Reader/Writers so that the communications fields do not overlap. If the Reader/Writers are installed to close to each other, the reading speed will decrease.
p.236

CHECK! Refer to *Travel Speed Calculations* in *Section 11 Appendices* and set the workpiece travel speed.
p.247

For details, refer to *Using High-speed Traveling Mode* in this section.
p.135

CHECK! In High-speed Traveling Mode, the Master Reader/Writer must be located first.

In High-speed Traveling Mode, you can use only the READ DATA RF Tag communications command. Also, you can specify only the Auto or Repeat communications option. If you use any communications option other than Repeat in the High-speed Traveling Mode, an execution status error will be indicated in the response.

Applicable RF Tag Communications Commands

	Supported
READ DATA	Yes
WRITE DATA	No
DATA FILL	No
RF TAG OVERWRITE COUNT CONTROL	No
READ ID	No
COPY	No
LOCK	No

Applicable Communications Options

	Supported
Once	No
Auto	Yes
Repeat	Yes
FIFO Repeat	No

CHECK!

In High-speed Traveling Mode, the Reader/Writers do not simultaneously perform communications. The Reader/Writers individually perform communications on a time sharing basis.

Using Communication Diagnostic and the RF Analyzer

You can use communications diagnostics from a Web server. Use either of the following procedures. Use the Web server to use the RF Analyzer.

Using the Web Server

■ Enabling Communication Diagnostic

1. Connect the Ethernet cable, turn ON the power supply to the Reader/Writer, and then start a Web browser on a computer.

2. Specify the IP address of the Reader/Writer in the address field of the Web browser.
Enter **http://192.168.1.200/** if you are using the default IP address.

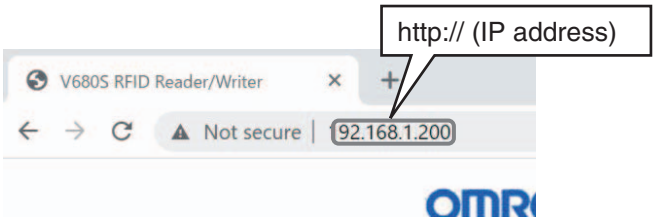

3. The Communications Setting View will be displayed.

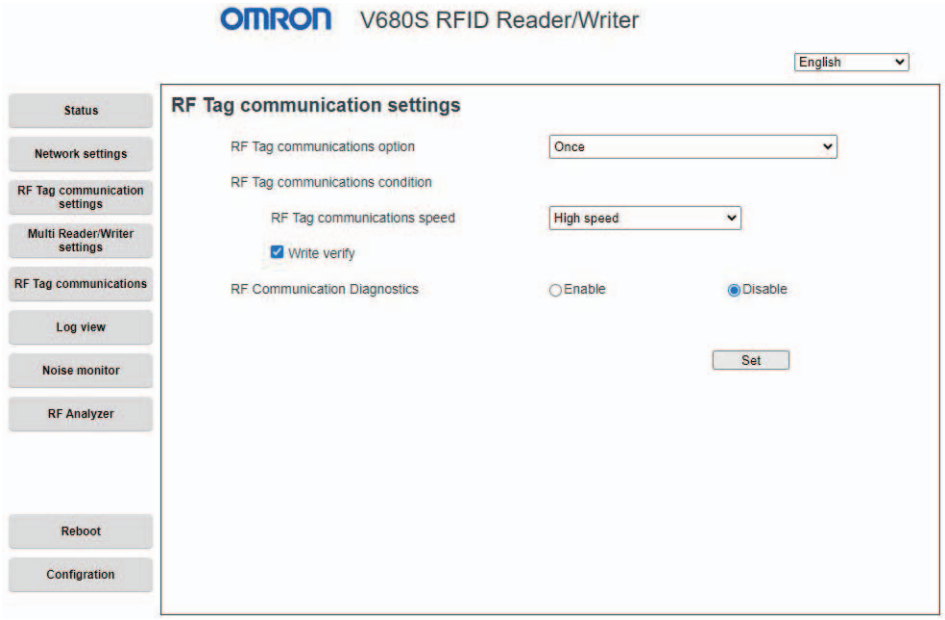

4. Select the *Enable* Option for *Communication Diagnostics* and click the **Set** Button.

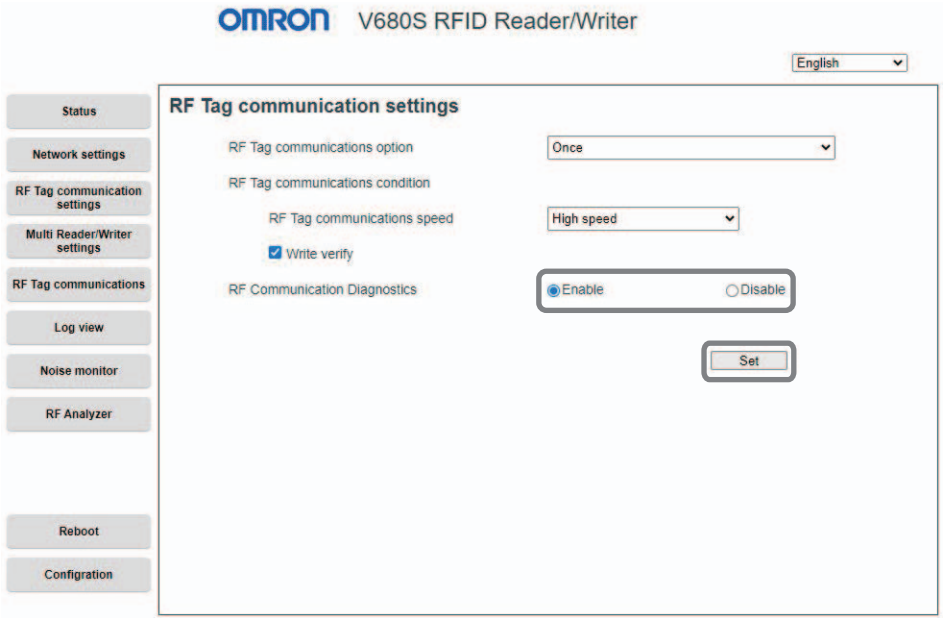

Refer to *Communications Settings View* in *Section 8 Web Browser Interface* for the setting procedure for the Web browser interface.

p.192

CHECK!

When you enable communication diagnostic, the setting will be retained after the Reader/Writer is restarted and communication diagnostic will remain enabled.

CHECK!

You cannot use the communications diagnostics if you are using the FIFO Repeat communications option. Use the Once, Auto or Repeat communications option.

■ Communicating with an RF Tag

1. The RF Tag Communications View will be displayed.

2. Place a RF Tag in front of the Reader/Writer.

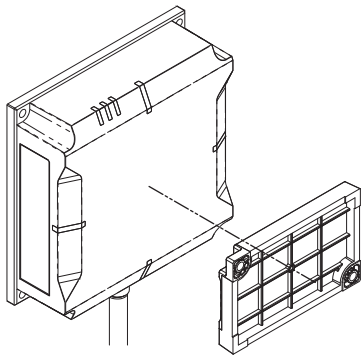

CHECK!

To increase the accuracy of communication diagnostic, we recommend installation in an environment that is as close as possible to the actual application environment.

3. Set the communications parameters (data address, data size, etc.), click the **Send** Button, and check the diagnostic results.

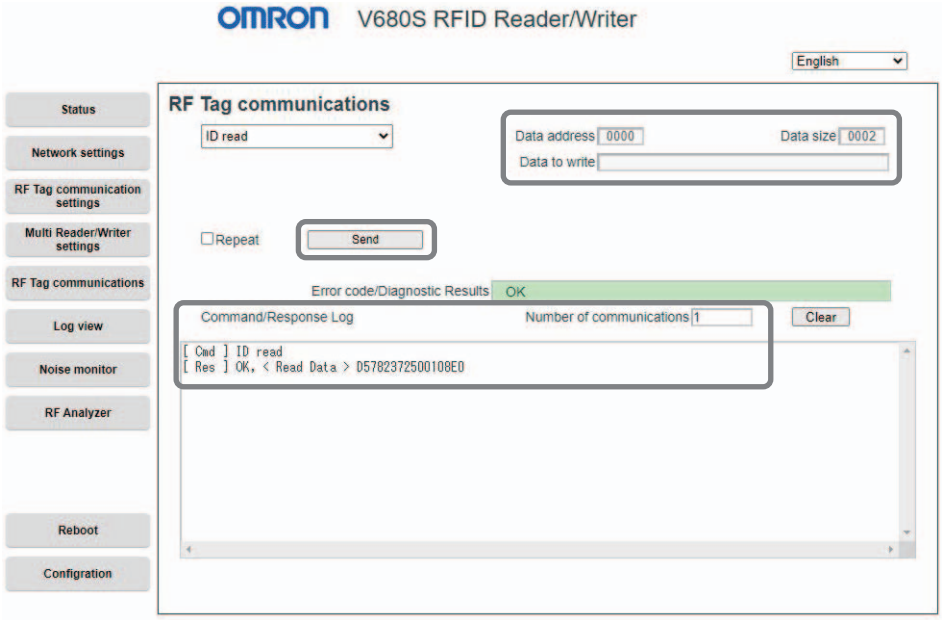

■ Checking with the RF Analyzer and Implementing Corrections

1. Display the RF Analyzer View.

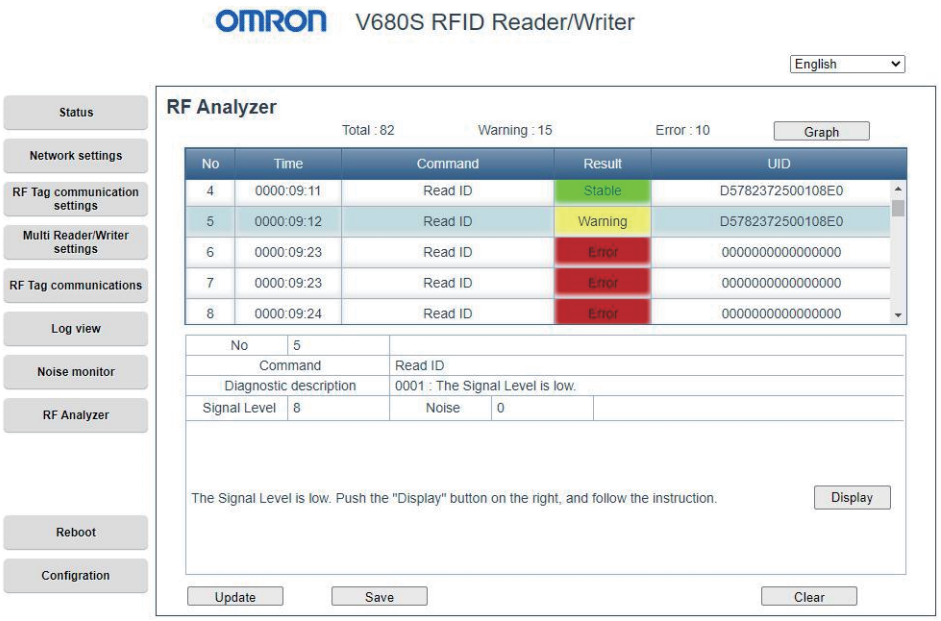

CHECK! You cannot use the RF Tag Analyzer if you are using the FIFO Repeat communications option. Use the Once, Auto or Repeat communications option.

2. Click the **Display** Button in the *Details* column and follow the guidance to check the assumed causes and corrections.

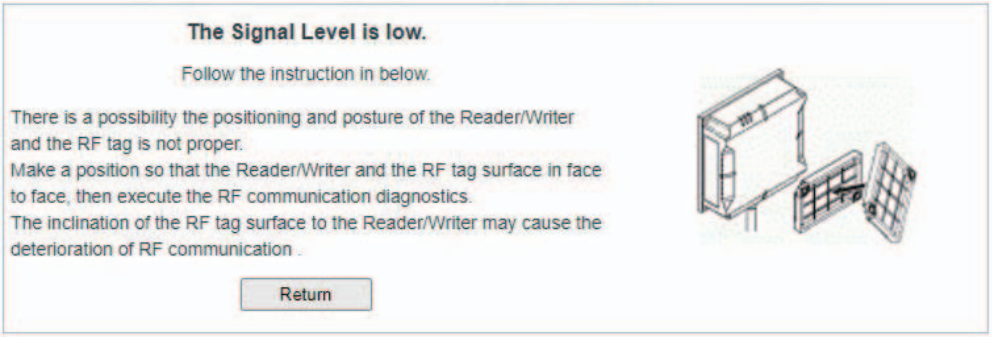

3. In this example, the position of the Tag is corrected according to the guidance.

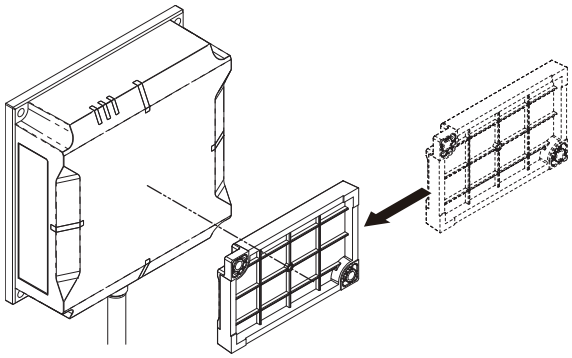

4. You can check the graph display to check quantitative information on the degree of instability.

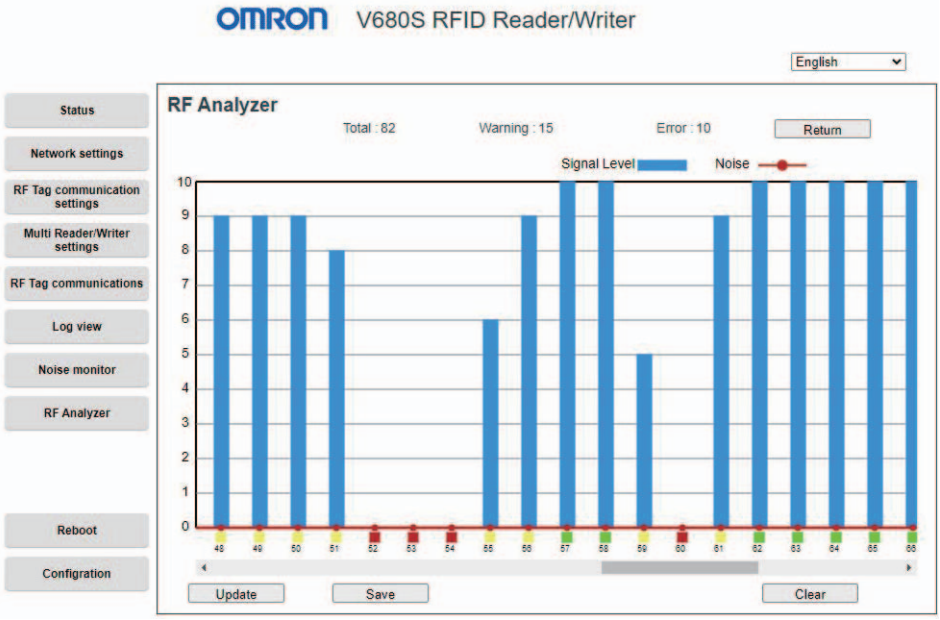

When you are finished, perform the step to communicate with the RF Tag again and check to see if stable communications have been achieved.

Using Multi-Reader/Writer Operation

Using Field Extension Mode

Use the following procedure for operation in Field Extension Mode. The following figure shows an example in which four Reader/Writers are installed.

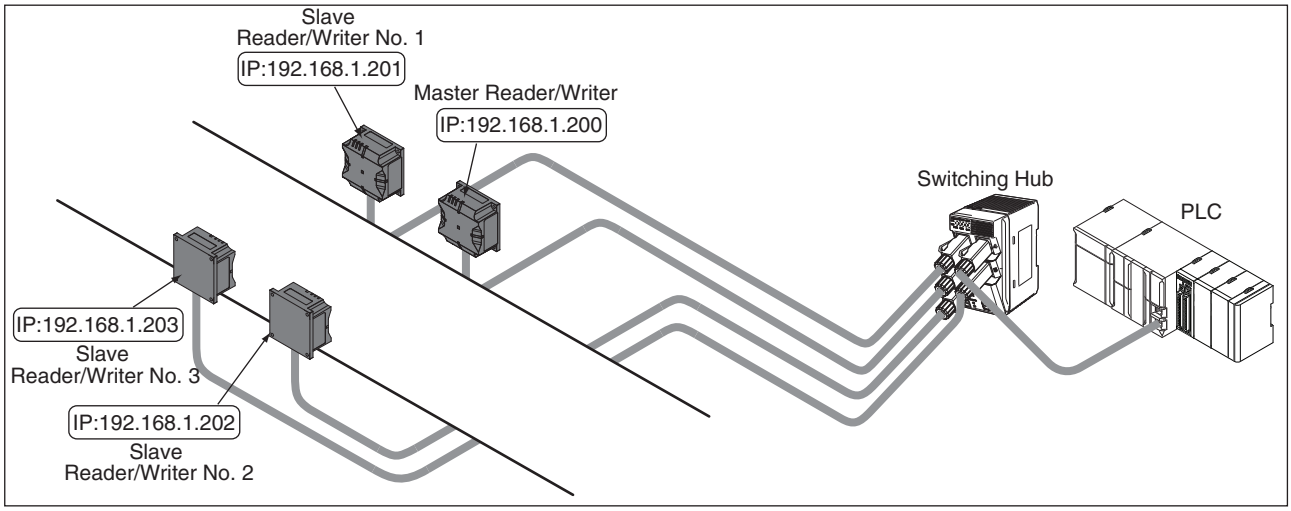

Enabling Field Extension Mode

1. Connect all of the Reader/Writers with Ethernet Cables and turn ON the power supplies.

CHECK!

Set a unique IP address for each Reader/Writer in advance.
Refer to *Section 5 Preparations for Communications*.

2. Start a Web browser on your computer.

3. In the address field on the Web browser operation window, enter the IP address of the master Reader/Writer (here, 192.168.1.200).

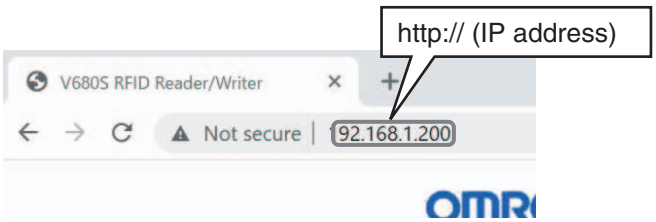

4. Display the RF Tag Communications Settings View, set the RF Tag communications option to Once, Auto or Repeat, and then click the **Set** Button.

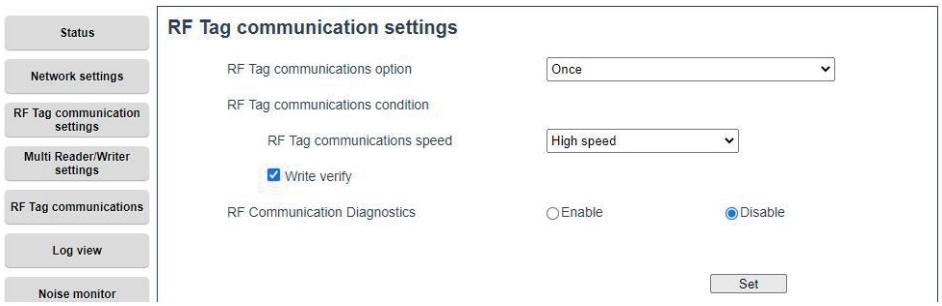

CHECK!

If you specify the FIFO Repeat communications option, multi-Reader/Writer operation will be enabled and a multi-Reader/Writer execution error will occur when you restart.

5. Display the Multi-Reader/Writer Settings View.

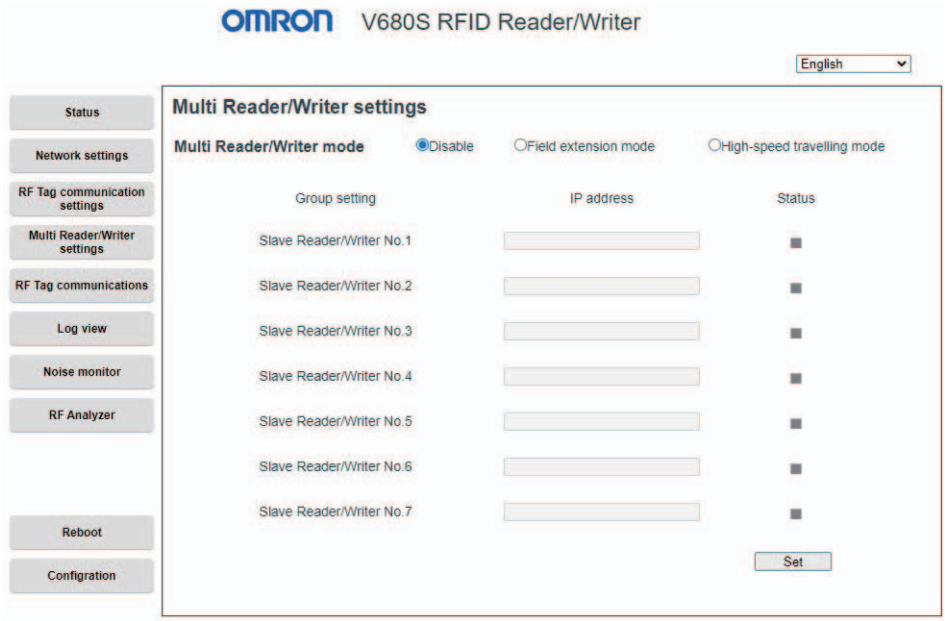

6. Select the *Field Extension Mode* Check Box.

7. Set the IP addresses of the three slave Reader/Writers and click the **Set** Button.

CHECK! If you assign the IP addresses of the Reader/Writer from the IO controller, the IP addresses of the slave Reader/Writer will change dynamically and may result in unexpected operation. Confirm that no problems will occur before you assign the IP addresses from the IO controller.

8. A confirmation message will be displayed. Click the **OK** Button.

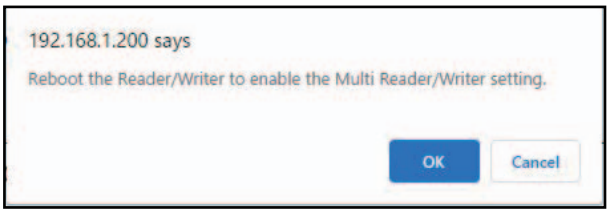

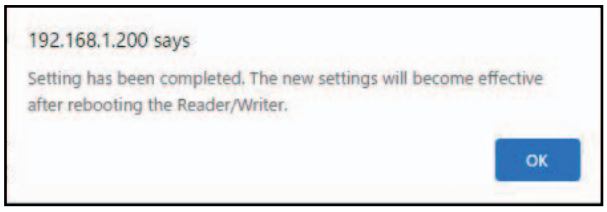

9. Click the **Reboot** Button. A Confirm Reboot Dialog Box will be displayed. Click the **OK** Button.

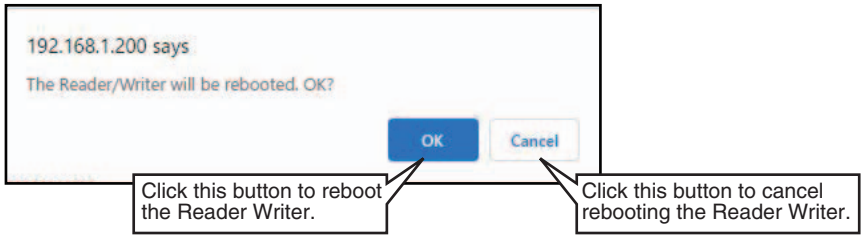

10. The following dialog box is displayed after the Reader/Writer has finished rebooting. Click the **OK** Button to connect to the Reader/Writer.

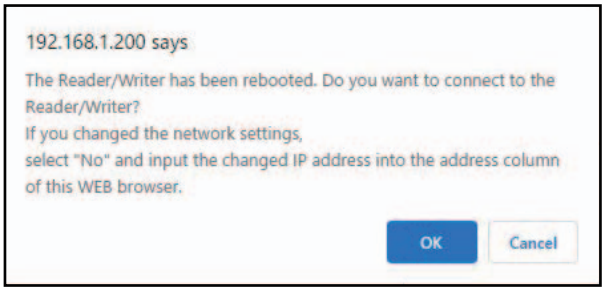

11. The following dialog box is displayed after reconnecting to the Reader/Writer. Click the **OK** Button.

CHECK! When re-connection goes wrong and an error message is displayed, check connection with the Reader/Writer and reboot a Web browser.

CHECK! After re-connection, displays the “Status” window.

12. When the Master Reader/Writer is restarted, group registration processing is automatically performed for the registered Slave Reader/Writers.

CHECK! If the Master Reader/Writer cannot establish communications with a registered Slave Reader/Writer (e.g., due to an incorrect IP address or because the Slave Reader/Writer is not started), the ERROR indicator (red) on the Master Reader/Writer will flash at 1-s intervals.

13. You can confirm when communications have been established with all of the slave Reader/Writer from the Multi-Reader/Writer Setting View of the Web browser operation window.

Group setting	IP address	Status
Slave Reader/Writer No.1	192.168.1.201	
Slave Reader/Writer No.2	192.168.1.202	
Slave Reader/Writer No.3	192.168.1.203	
Slave Reader/Writer No.4		

14. The RUN indicator will light yellow on Reader/Writers that are operating as slave Reader/Writers. The indicator on the master Reader/Writer will remain lit green.

15. This concludes the procedure to set Field Extension Mode. You can now use READ DATA or WRITE DATA commands from the host controller for the Master Reader/Writer to perform linked operation of multiple Reader/Writers.

■ Executing a READ DATA Command in Field Extension Mode.

▪ When the RF Tag Communications Option of the Master Reader/Writer Is Set to Once

1. Send a READ DATA command from the host device to the Master Reader/Writer.

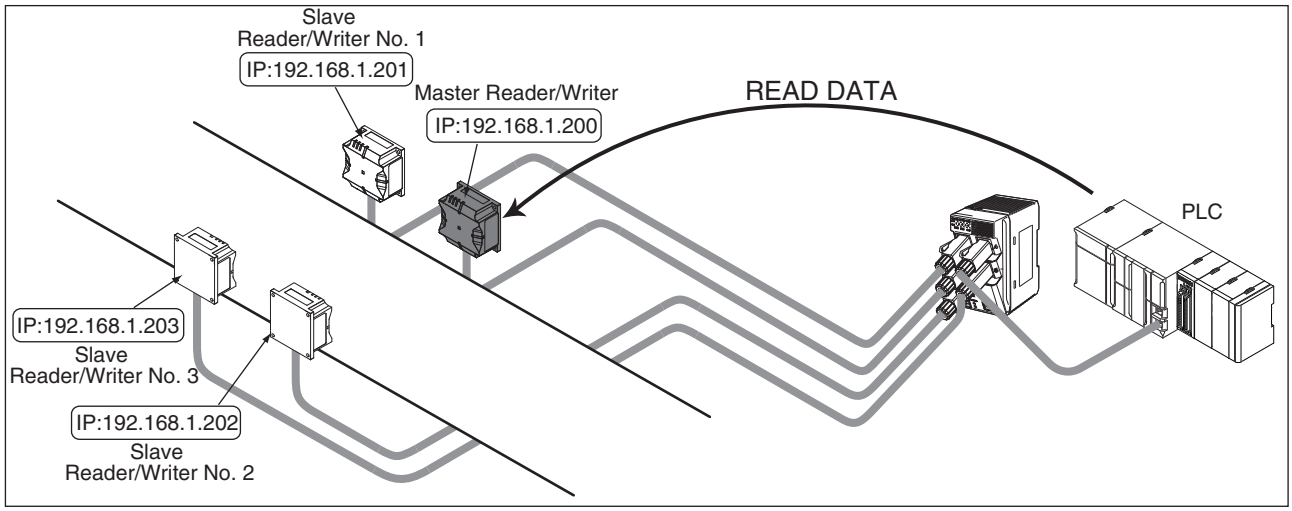

2. The Master Reader/Writer will communicate with the RF Tag using the Once communications option. Here, communications will end normally or an RF Tag communications error will occur, the Reader/Writer will return a response to the host device, and processing will end. If an RF Tag missing error is detected, processing proceeds to step 3.

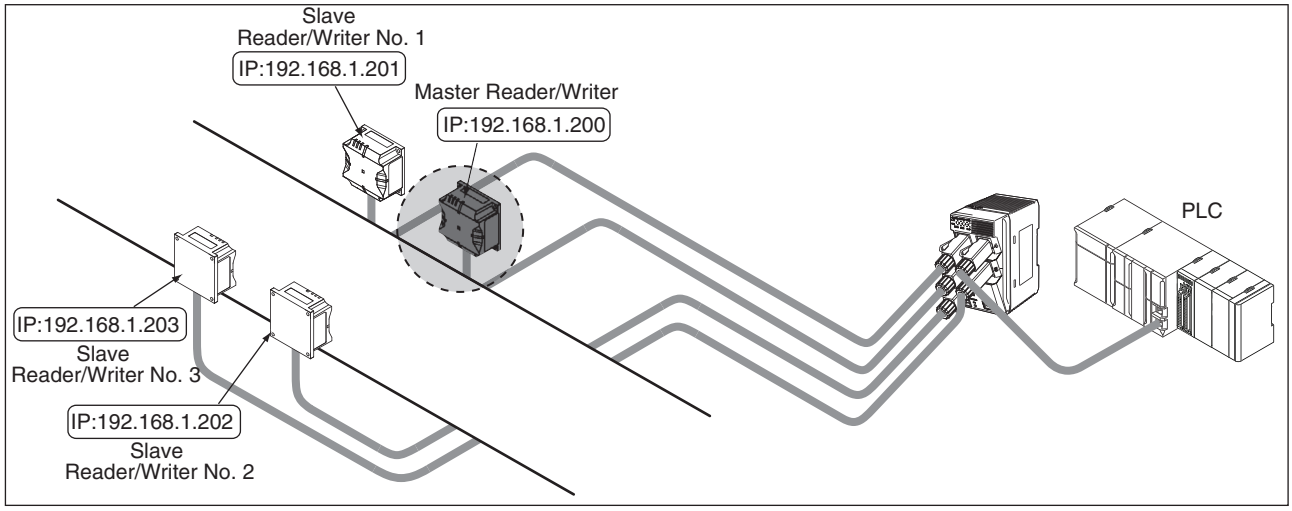

3. Slave Reader/Writer No. 1 will communicate with the RF Tag using the Once communications option. Here, communications will end normally or an RF Tag communications error will occur, the Reader/Writer will return a response to the host device, and processing will end. If an RF Tag tag missing error is detected, processing will be continued in order by Slave No. 2 and then by Slave No. 3.

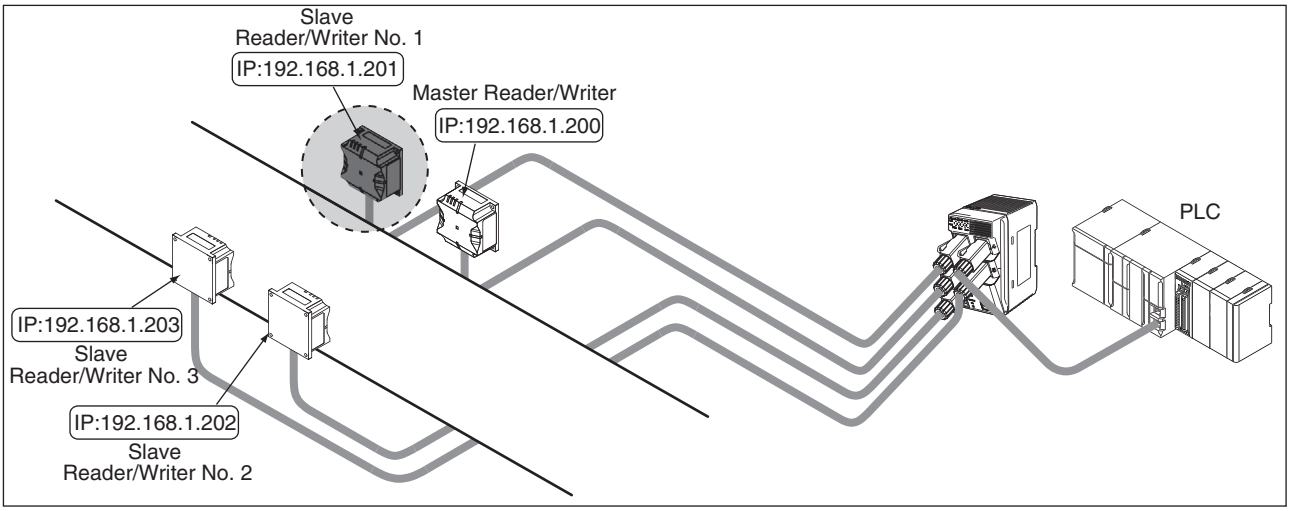

4. If an RF Tag missing error is detected for Slave No. 3, the error is returned to the host device and processing ends.

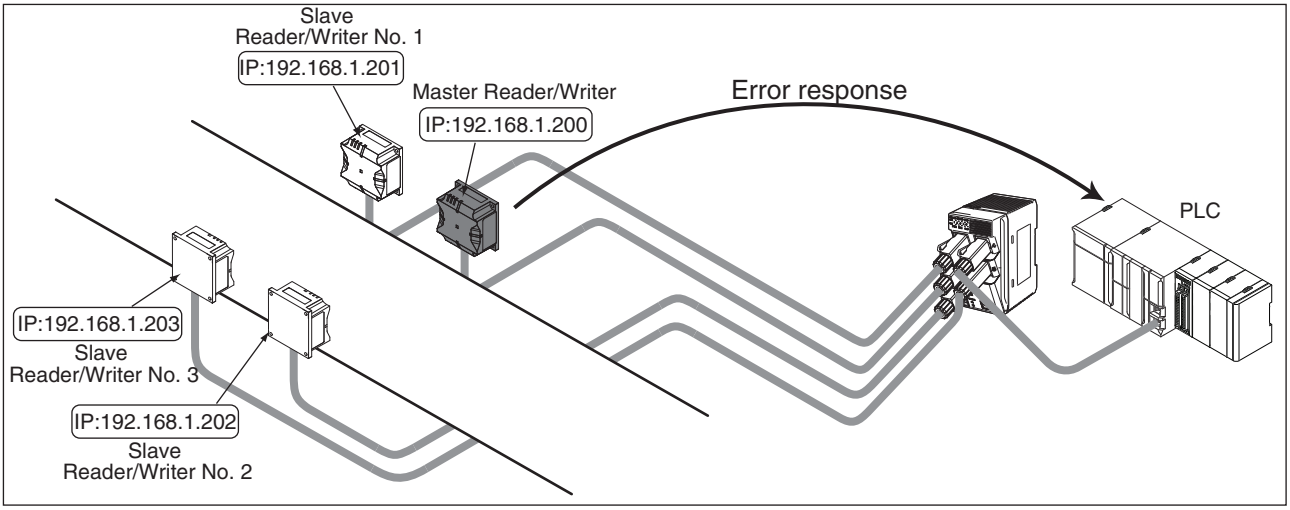

▪ When the RF Tag Communications Option of the Master Reader/Writer Is Set to Auto

1. Send a READ DATA command from the host device to the Master Reader/Writer.

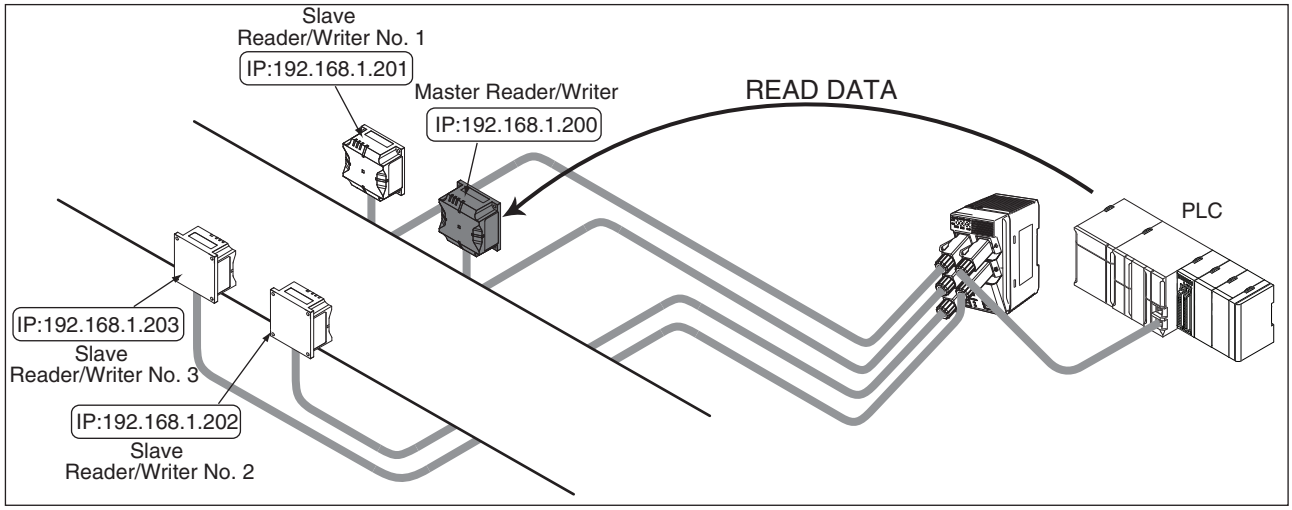

2. The Master Reader/Writer will communicate with the RF Tag using the Once communications option. Here, communications will end normally or an RF Tag communications error will occur, the Reader/Writer will return a response to the host device, and processing will end. If an RF Tag missing error is detected, processing proceeds to step 3.

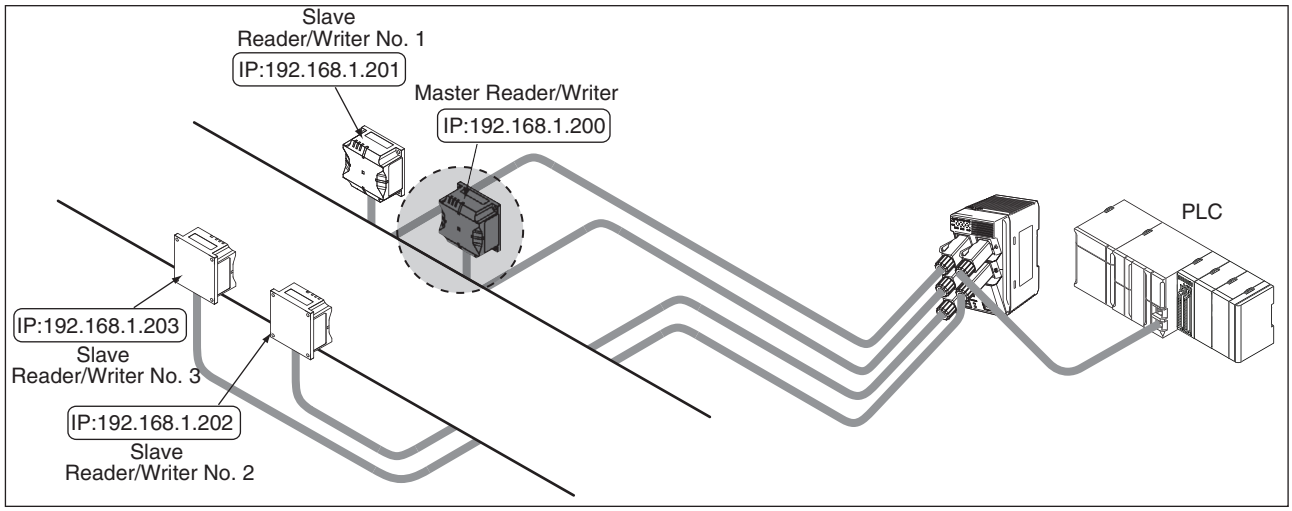

3. Slave Reader/Writer No. 1 will communicate with the RF Tag using the Once communications option. Here, communications will end normally or an RF Tag communications error will occur, the Reader/Writer will return a response to the host device, and processing will end. If an RF Tag tag missing error is detected, processing will be continued in order by Slave No. 2 and then by Slave No. 3.

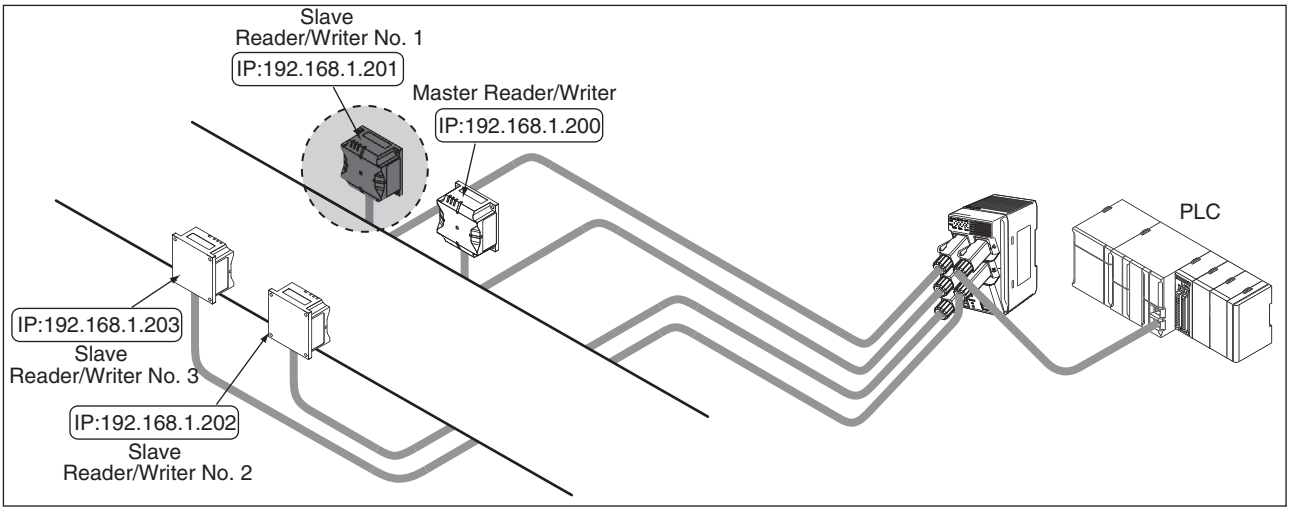

4. If an RF Tag missing error is detected for Slave No.3, communications processing is returned to the Master Reader/Writer and the operation is repeated from step 2.

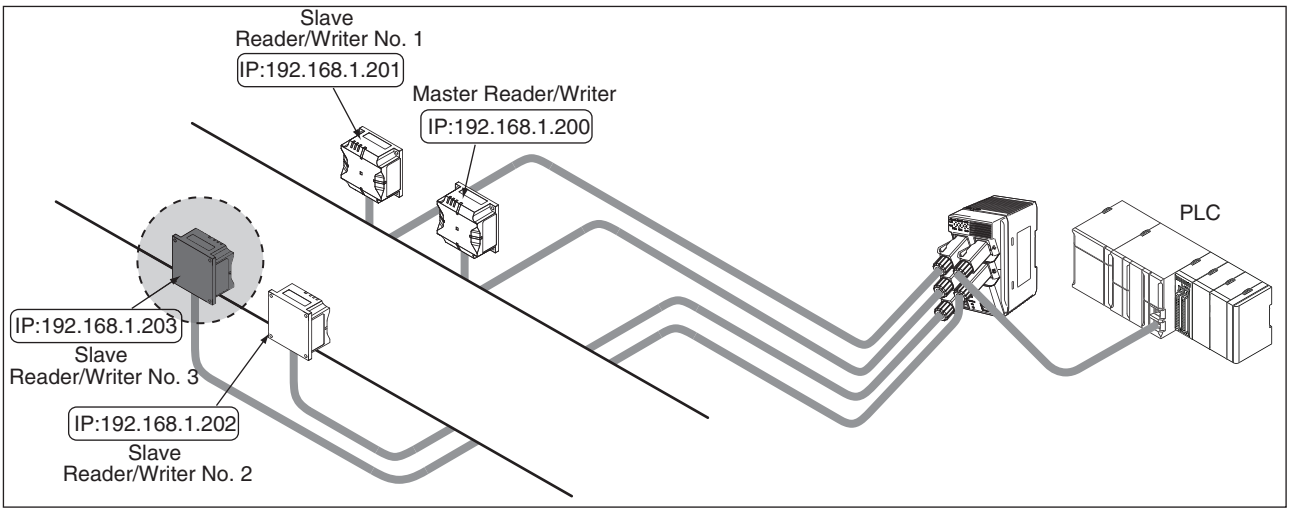

CHECK!

In Field Extension Mode, the Reader/Writers do not simultaneously perform communications. The Reader/Writers individually perform communications on a time sharing basis.

▪ When the RF Tag Communications Option of the Master Reader/Writer Is Set to Repeat

1. Send a READ DATA command from the host device to the Master Reader/Writer.

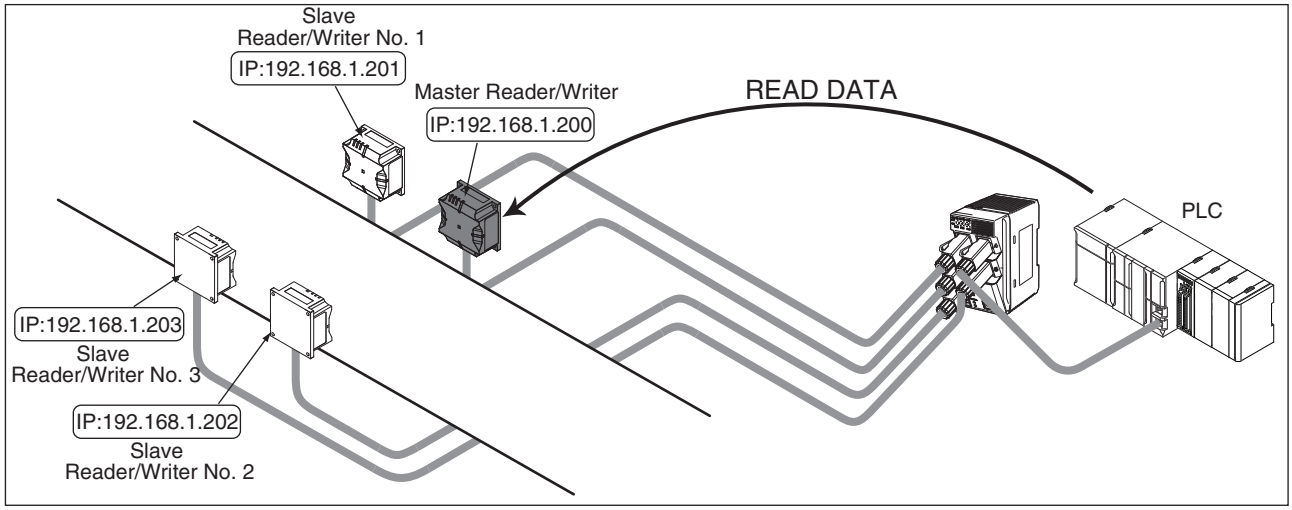

2. The Master Reader/Writer will communicate with the RF Tag using the Once communications option. Here, if RF Tag communications end normally, the Reader/Writer will return a response to the host device and processing is repeated from step 2. If an RF Tag missing error is detected, processing proceeds to step 3.

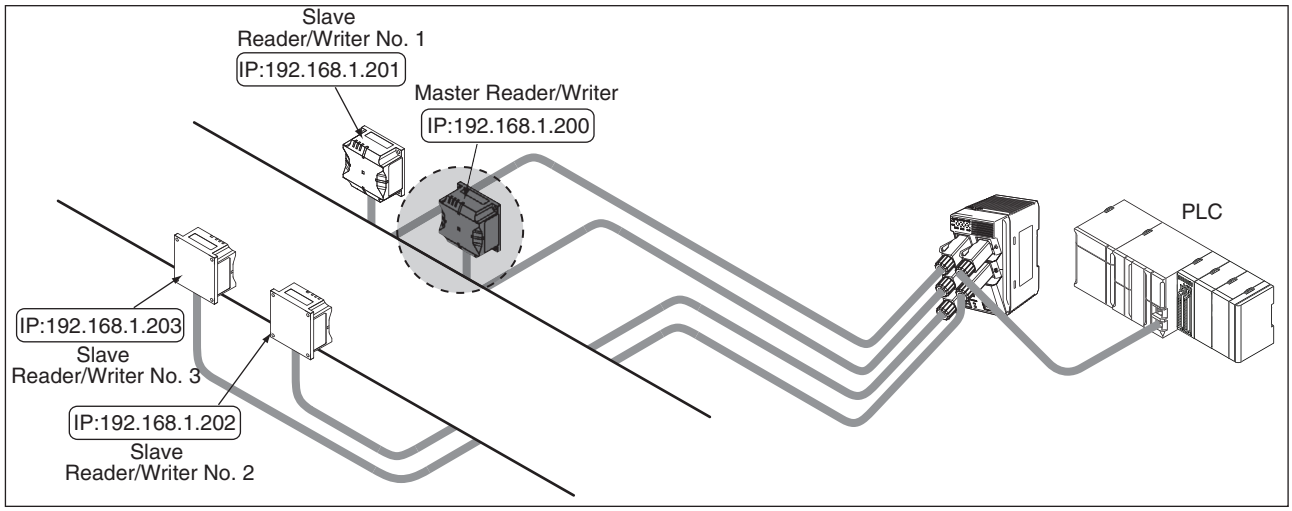

3. Slave Reader/Writer No. 1 will communicate with the RF Tag using the Once communications option. Here, if RF Tag communications end normally, the Reader/Writer will return a response to the host device and processing is repeated from step 2. If an RF Tag tag missing error is detected, processing will be continued in order by Slave No. 2 and then by Slave No. 3.

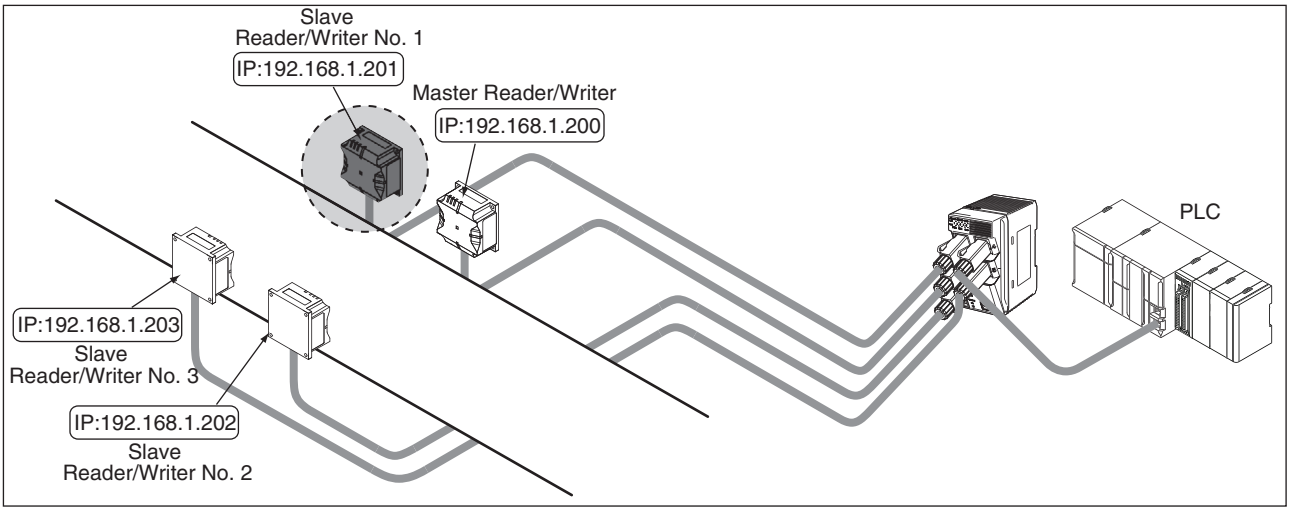

4. When communications have been completed for all of the Slave Reader/Writers, the operation is repeated from step 2.

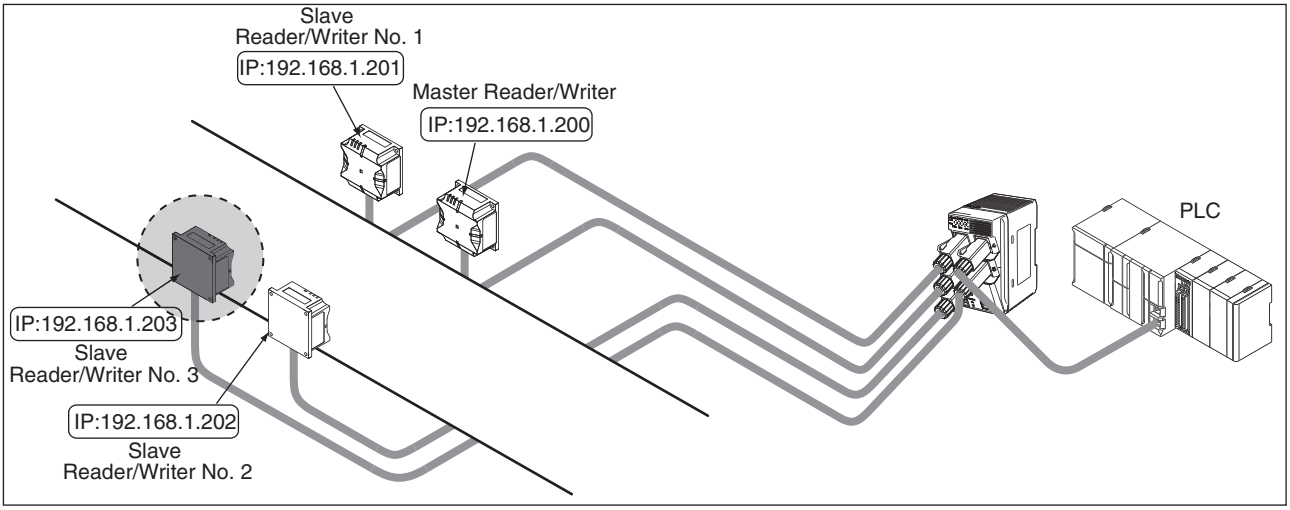

CHECK!

In Field Extension Mode, the Reader/Writers do not simultaneously perform communications. The Reader/Writers individually perform communications on a time sharing basis.

Using High-speed Traveling Mode

Use the following procedure for operation in High-speed Traveling Mode. The following figure shows an example in which four Reader/Writers are installed.

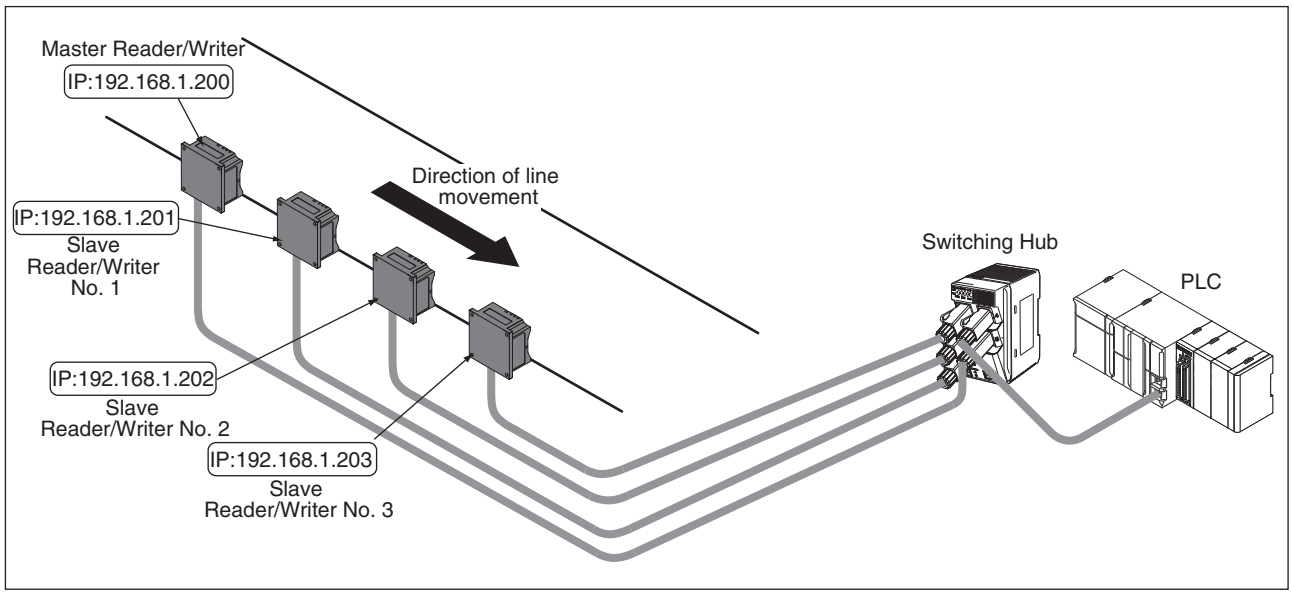

■ Enabling High-speed Traveling Mode

1. Connect all of the Reader/Writers with Ethernet Cable and turn ON the power supplies.

CHECK!

Set a unique IP address for each Reader/Writer in advance.
Refer to *Section 5 Preparations for Communications*.

2. Start a Web browser on your computer.

3. In the address field on the Web browser operation window, enter the IP address of the master Reader/Writer (here, 192.168.1.200).

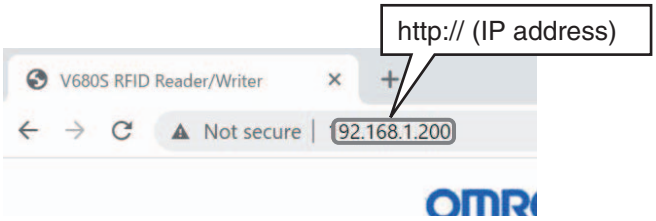

4. Display the RF Tag Communications Settings View, set the RF Tag communications option to Repeat, and then click the **Set** Button.

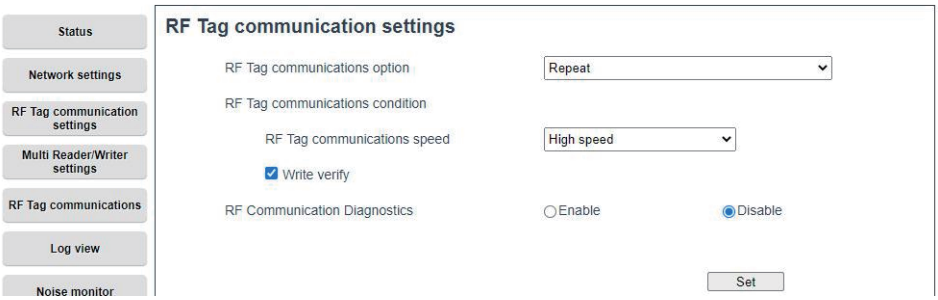

CHECK!

If you specify the Once or FIFO Repeat communications option, multi-Reader/Writer operation will be enabled and a multi-Reader/Writer execution error will occur when you restart.

5. Display the Multi-Reader/Writer Settings View.

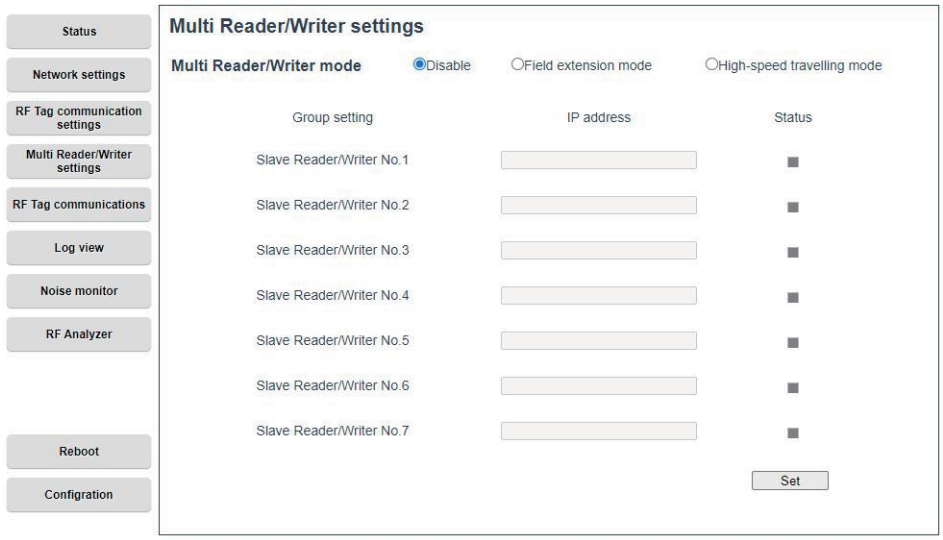

6. Select the *High-speed travelling mode* Check Box.

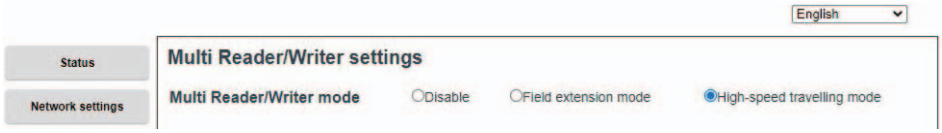

7. Set the IP addresses of the three slave Reader/Writers and click the **Set** Button.

CHECK! If you assign the IP addresses of the Reader/Writer from the IO controller, the IP addresses of the slave Reader/Writer will change dynamically and may result in unexpected operation. Confirm that no problems will occur before you assign the IP addresses from the IO controller.

8. A confirmation message will be displayed. Click the **OK** Button.

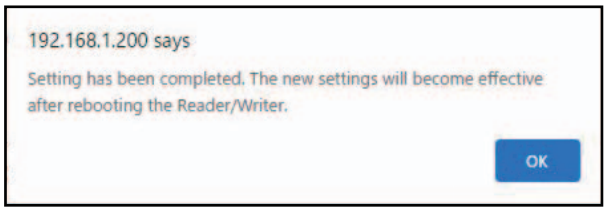

9. Click the **Reboot** Button. A Confirm Reboot Dialog Box will be displayed. Click the **OK** Button.

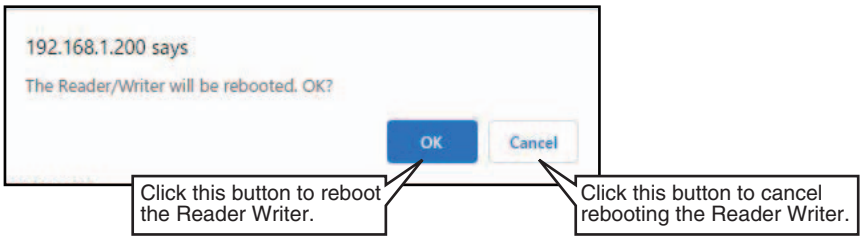

10. The following dialog box is displayed after the Reader/Writer has finished rebooting. Click the **OK** Button to connect to the Reader/Writer.

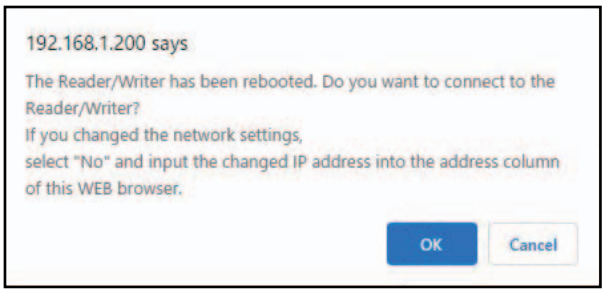

11. The following dialog box is displayed after reconnecting to the Reader/Writer. Click the **OK** Button.

CHECK! When re-connection goes wrong and an error message is displayed, check connection with the Reader/Writer and reboot a Web browser.

CHECK! After re-connection, display the “Status” window.

12. When the Master Reader/Writer is restarted, group registration processing is automatically performed for the registered Slave Reader/Writers.

CHECK! If the Master Reader/Writer cannot establish communications with a registered Slave Reader/Writer (e.g., due to an incorrect IP address or because the Slave Reader/Writer is not started), the ERROR indicator (red) on the Master Reader/Writer will flash at 1-s intervals.

13. You can confirm when communications have been established with all of the slave Reader/Writer from the Multi-Reader/Writer Setting View of the Web browser operation window.

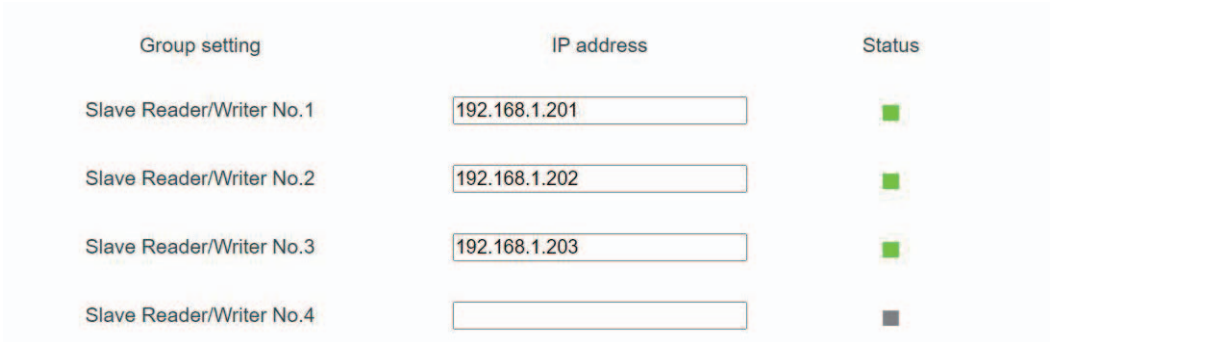

14. The RUN indicator will light yellow on Reader/Writers that are operating as slave Reader/Writers. The indicator on the master Reader/Writer will remain lit green.

15. This concludes the procedure to set Field Extension Mode. You can now use READ DATA or WRITE DATA commands from the host controller for the Master Reader/Writer to perform linked operation of multiple Reader/Writers.

■ Executing a READ DATA Command in High-speed Traveling Mode.

1. Send a READ DATA command from the host device to the Master Reader/Writer.

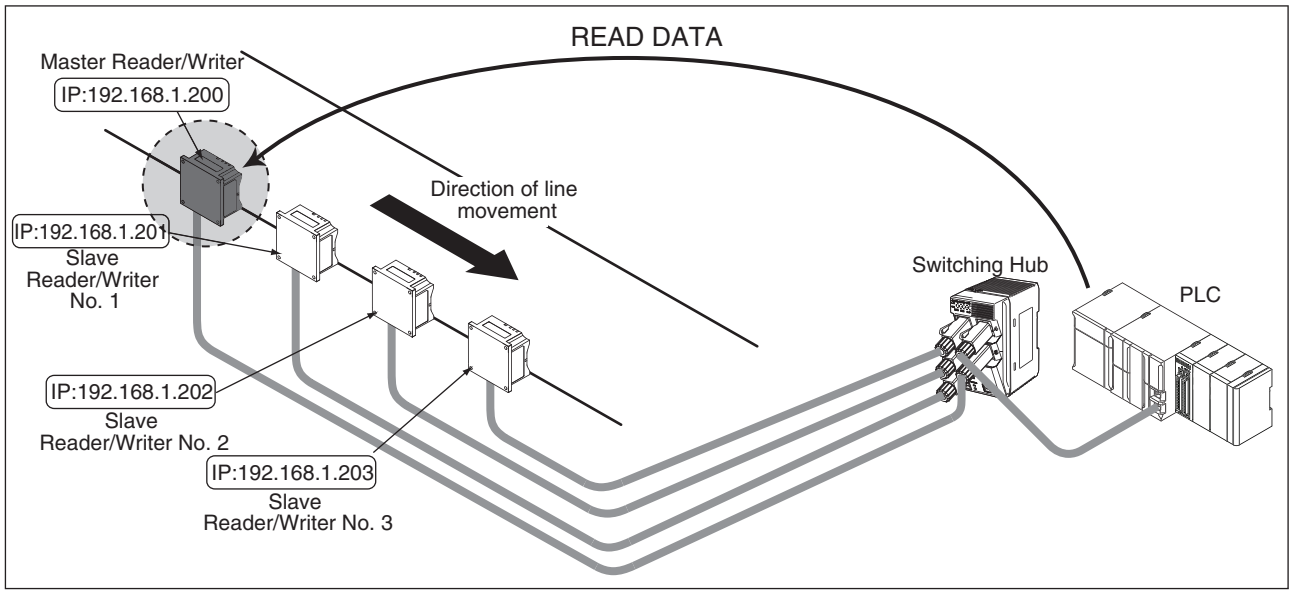

2. The Master Reader/Writer will wait for an RF Tag to enter the communications field and then communicate with the RF Tag.

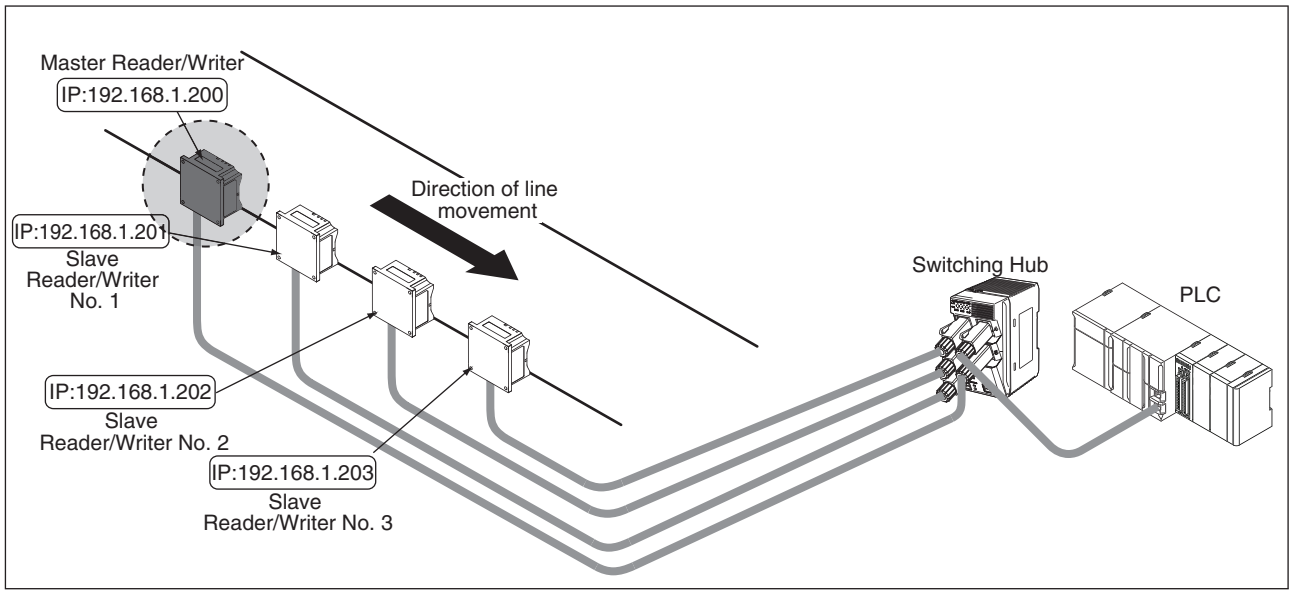

3. Slave No. 1 will wait for an RF Tag to enter the communications field and then communicate with the RF Tag. If communicating with the RF Tag ends normally, processing will be continued in order by Slave No. 2 and then by Slave No. 3.

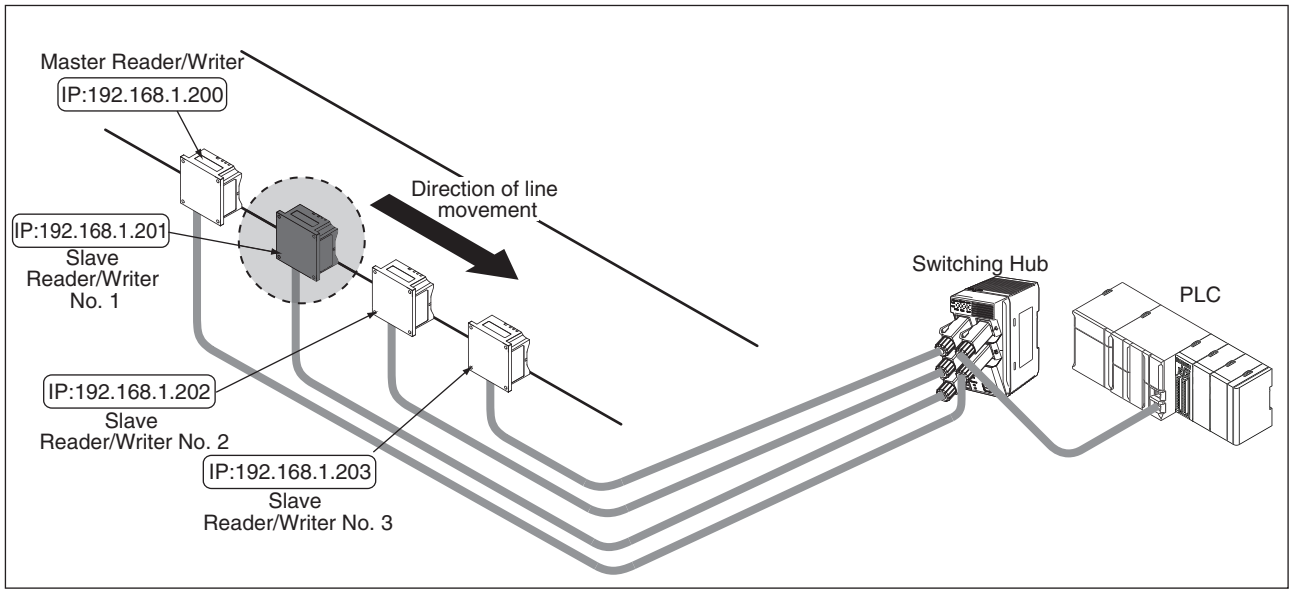

4. If all communications with the RF Tag end normally, the read data is returned to the host device and processing returns to step 2.

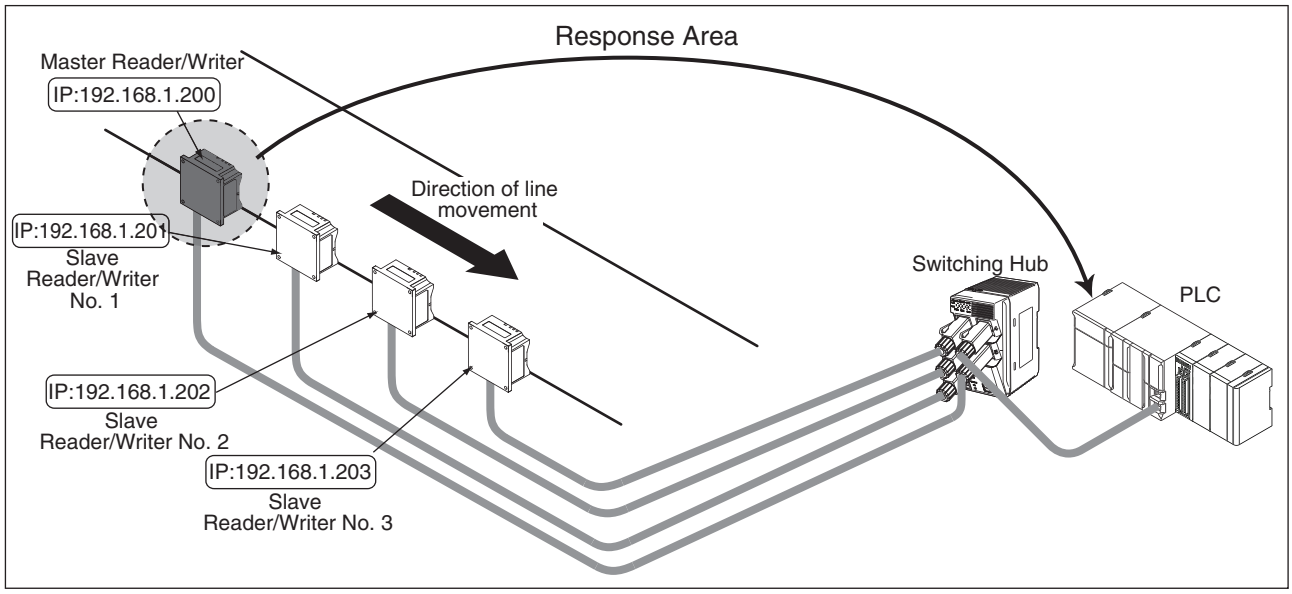

■ Disabling Multi-Reader/Writer Operation

The following example procedure shows how to disable the multi-Reader/Writer operation. You can use the same procedure from either Field Extension Mode or High-speed Traveling Mode.

1. Start the Web browser on your computer and enter the IP address of the master Reader/Writer (here, 192.168.1.200) in the address field.

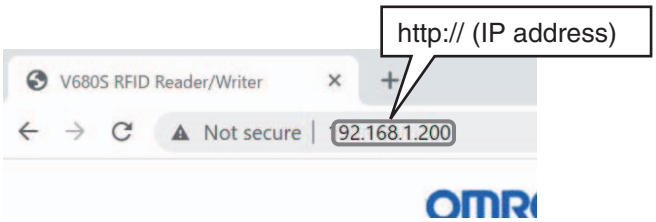

2. Display the Multi-Reader/Writer Settings View.

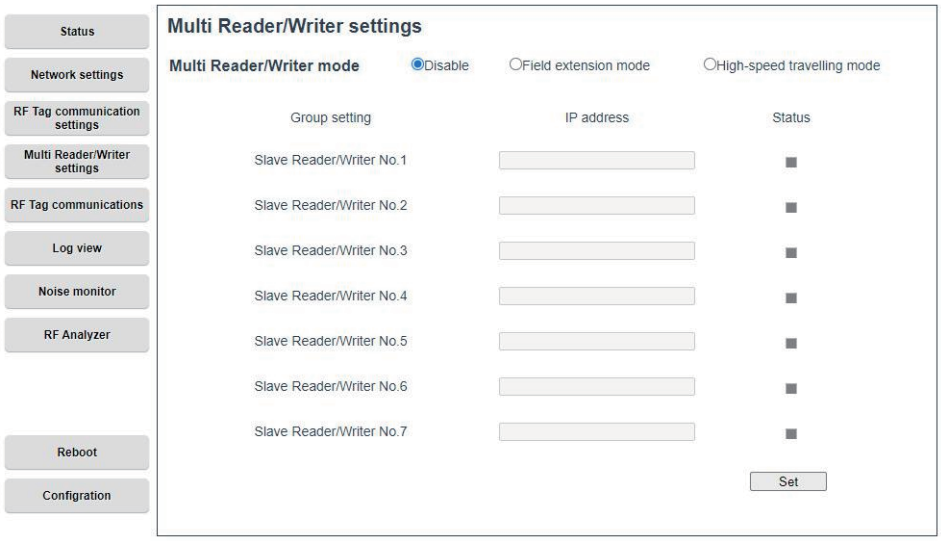

3. Select the *Disable* Check Box for Multi-Reader/Writer Mode and click the **Set** Button.

4. A confirmation message will be displayed. Click the **OK** Button.

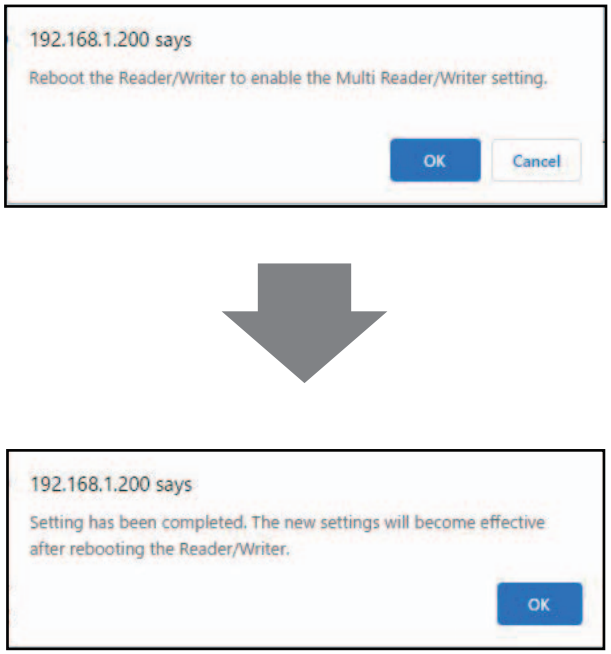

5. Click the **Reboot** Button. A Confirm Reboot Dialog Box will be displayed. Click the **OK** Button.

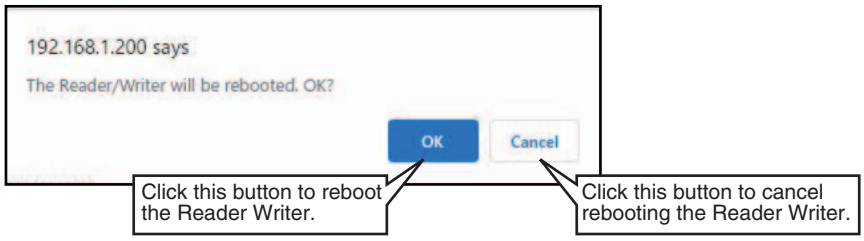

CHECK! If you turn OFF the power supplies to the Slave Reader/Writers or if a communications error occurs for a Slave Reader/Writer (e.g., Ethernet Cable disconnection) before you restart the Reader/Writers, an execution status error will occur and the Reader/Writers will not restart normally. If that occurs, turn OFF the power supplies to all of the Reader/Writers and then turn them back ON.

6. The following dialog box is displayed after the Reader/Writer has finished rebooting.
Click the **OK** Button to connect to the Reader/Writer.

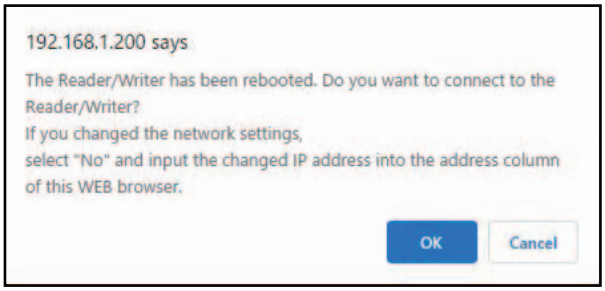

7. The following dialog box is displayed after reconnecting to the Reader/Writer. Click the **OK** Button.

CHECK! When re-connection goes wrong and an error message is displayed, check connection with the Reader/Writer and reboot a Web browser.

CHECK! After re-connection, display the “Status” window.

8. The Slave Reader/Writers will also be restarted automatically. This concludes the procedure to disable multi-Reader/Writer operation.

CHECK! When the Field Extension Mode is disabled, the RUN indicators on the Slave Reader/Writers will fast flashing green.

Section 7
Host Communications Specifications

PROFINET IO Communications Protocol 146

- Data Exchange with PROFINET IO 146
- PROFINET IO Communications with the Reader/Writer 147
- Setting Up Cyclic Data Exchanges 148
- Memory Assignments 149
- V680S Commands 151

V680S Command Details 154

- READ ID 154
- READ DATA 155
- WRITE DATA 156
- LOCK 157
- DATA FILL 158
- RF TAG OVERWRITE COUNT CONTROL 159
- RESTORE DATA 160
- COPY DATA 161
- INITIALIZE 163
- SET RF TAG COMMUNICATIONS 164
- GET RF TAG COMMUNICATIONS SETTINGS 165
- SET MULTI-READER/WRITER OPERATION 166
- GET MULTI-READER/WRITER SETTINGS 168
- GET MODEL INFORMATION 170
- GET FIRMWARE VERSION 171
- GET OPERATING TIME 172
- MEASURE NOISE 173
- GET COMMAND ERROR LOG 174
- GET RESTORE INFORMATION 176
- GET MULTI-READER/WRITER STATUS 178
- RESET 179

Time Charts 180

- Time Charts 180

PROFINET IO Communications Protocol

Data Exchange with PROFINET IO

The host device (PLC) and Reader/Writer function as the IO controller and IO device.
You must establish a connection called an AR (application relation) between the two devices to perform communications between an IO controller and IO device.
When an AR connection is established the CRs (communications relations) that define the contents of data communications are used to perform data communications between the IO controller and IO device.

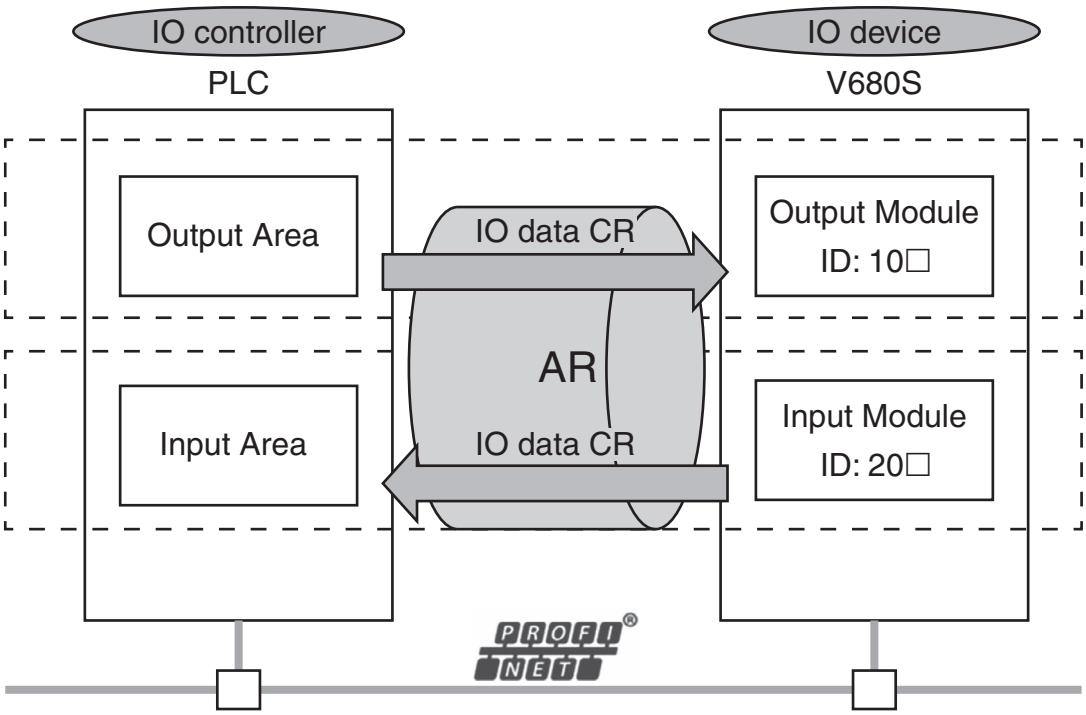

The CRs include the IO data CRs, record data CR, and alarm CR.
The IO data CRs are used to perform data communications every refreshing task period. The other CRs perform communication between the cyclic data communications.

PROFINET IO Communications with the Reader/Writer

For cyclic data exchanges between the host device (PLC) and a Reader/Writer, you can use the IO data CRs to control RF Tag communications from the PLC with command/response communications. The following communications areas are prepared in the PLC to perform communications.

Area name	Description
Command Area	This is the area to which you (PLC) write commands for the Reader/Writer to execute.
Response Area	This is the area to which the Reader/Writer writes the results of commands executed from the command area.

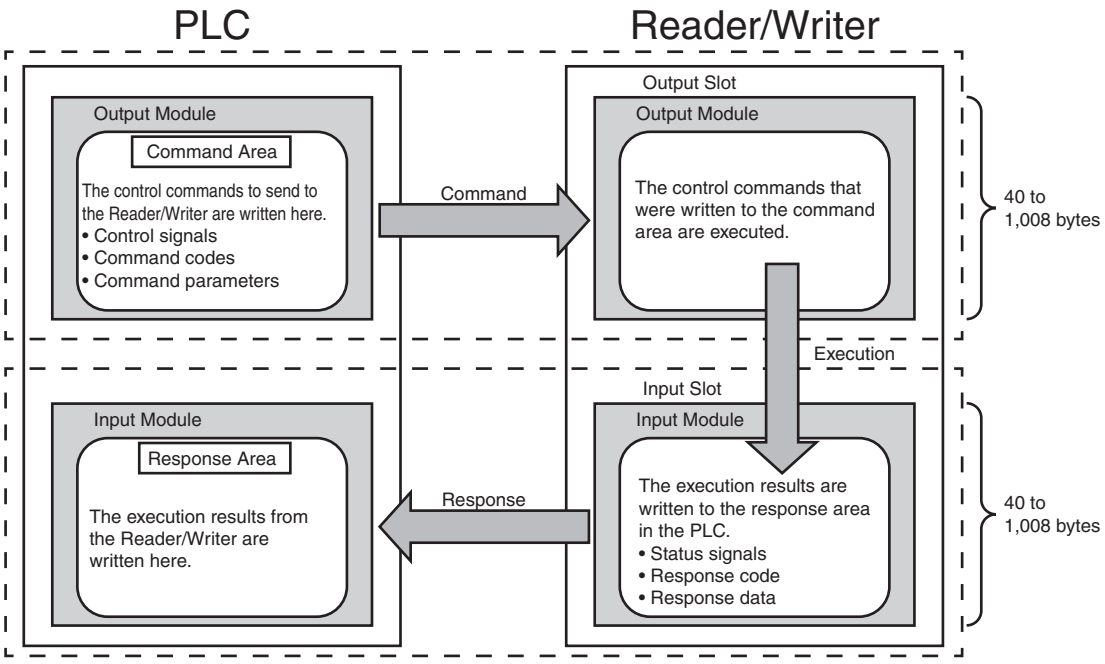

Setting Up Cyclic Data Exchanges

This section describes how to set up cyclic data exchanges with PROFINET IO.

The Reader/Writer's IO data CRs provide slot 1 for output data and slot 2 for input data.
An Output Module and Input Module with different data sizes are specified for these slots.

▪ I/O Data CR Settings

Setting item	Setting	
	Command area	Response area
Slot number	0001 hex	0002 hex
Subslot number	0000 hex	0000 hex
Module name	Output data (V680S Command Data)	Input data (V680S Response Data)
Module ID	0100/0101/0102/0103 hex	0200/00201/0202/0203 hex
Data size	40, 264, 520, or 1,008 bytes*1	40, 264, 520, or 1,008 bytes*1

*1 Select one of the following values for the data size according to the data size required to write or read an RF Tag in one operation.

Data size	Data size that can be read or written for an RF Tag in one operation
40 bytes	32 bytes
264 bytes	256 bytes
520 bytes	512 bytes
1,008 byte	1,000 byte

To connect to the host device (PLC) and perform PROFINET communications, set up the IO data CR from the Engineering Tool.
Refer to the manual for your Engineering Tool for the specific procedure to set up the IO data CR with the Engineering Tool.

CHECK!

To connect to an IO controller manufactured by OMRON, use the CX-Configurator FDT Engineering Tool to set up the IO data CR.

CHECK!

To set up cyclic data exchanges, a GSDML file that defines the V680S IO data CR is required. Download the GSDML file from your OMRON website.

Memory Assignments

This section describes the command area (output area) for the input CR to the Reader/Writer and the response area (input area) for the output CR to the PLC.
Memory alignment is given in units of 8 bits. The byte order in all fields is big endian.

▪ Command Area PLC (IO Controller) ⇔ Reader/Writer (IO Device)

Offset	Bit							
	7	6	5	4	3	2	1	0
+0	Resv	Resv	Resv	Resv	Resv	Resv	Resv	EXE
+1	Resv	Resv	Resv	Resv	Resv	Resv	Resv	Resv
+2	Command Code							
+3								
+4	Command Parameter 1							
+5								
+6	Command Parameter 2							
+7								
+8	Command Data (The format depends on the command.)							
:								
+N								

* Reserved (resv) bits are for future expansion. Do not turn them ON and OFF.

Signal/data	Name	Data type	Size	Description
EXE	Command Execution Request	BOOL	1 bit	• Turn ON this bit to send a request to the Reader/Writer to execute a command. Set the command code and parameters before you turn ON this bit. • You can turn OFF this bit during execution of a communications command with RF Tags to cancel communications processing by the Reader/Writer.
CmdCode	Command Code	WORD	16 bits	This word stores the command code.
CmdParam1	Command Parameter 1	WORD	16 bits	These words store the command parameters. Refer to the sections for individual commands for details.
CmdParam2	Command Parameter 2	WORD	16 bits	
CmdData	Command Data	---	---	These words store the command data. Refer to the sections for individual commands for details.

▪ Response Area Reader/Writer (IO Device) ⇔ PLC (IO Controller)

Offset	Bit							
	7	6	5	4	3	2	1	0
+0	SYS_ERR	RF_ERR	CMD_ERR	FRIC	ERR	NORM	BUSY	READY
+1	Resv	Resv	Resv	Resv	Resv	Resv	Resv	RF_WAR
+2	Error Code							
+3								
+4	Response Information 1							
+5								
+6	Response Information 2							
+7								
+8	Response Data (The format depends on the command.)							
:								
+N								

* Reserved (resv) bits are for future expansion. They always output 0.

Signal/data	Name	Data type	Size	Description
READY	Ready	BOOL	1 bit	This bit turns ON when the Reader/Writer completes preparations and is ready to receive a command. It turns OFF while cyclic data exchanges are disconnected and the reconnecting Reader/Writer is executing a command.
BUSY	Command Execution Active	BOOL	1 bit	This bit is ON while the Reader/Writer is executing a command. It is OFF when a command is not being executed.
NORM	Command Completion	BOOL	1 bit	This bit turns ON when the Reader/Writer completes command execution normally (i.e., for a normal end). It turns OFF when the EXE signal is turned OFF.
ERR	Error	BOOL	1 bit	This bit turns ON when the Reader/Writer returns an error response. It turns OFF when the EXE signal is turned OFF.
FRIC	Flicker	BOOL	1 bit	This bit toggles (turns ON or turns OFF) when the communications result changes while the Reader/Writer is executing an RF Tag communications command with a Repeat communications option.
CMD_ERR	Command Error	BOOL	1 bit	This bit turns ON when the Reader/Writer returns a command error response. It turns ON and OFF in sync with the ERR signal.
RF_ERR	RF Tag Communications Errors	BOOL	1bit	This bit turns ON when the Reader/Writer returns an RF Tag communications error response. It turns ON and OFF in sync with the ERR signal.
SYS_ERR	Fatal Error	BOOL	1 bit	This bit turns ON when the Reader/Writer returns a fatal error response. It turns ON and OFF in sync with the ERR signal.
RF_WAR	Unstable Communications	BOOL	1 bit	This bit turns ON when the diagnostics result in the response for execution of an RF Tag communications command by the Reader/Writer indicates that communications are unstable. It turns ON and OFF in sync with the NORM signal.
ErrCode	Error Code	WORD	2 bytes	This word contains the error code.
RespInfo1	Response Information 1	WORD	2 bytes	This word contains device information.
RespInfo2	Response Information 2	WORD	2 bytes	This word contains communications diagnostic results.
RespData	Response Data	---	---	This word contains the response data. Refer to the sections for individual commands for details.

V680S Commands

■ Command Codes

The following table lists the command codes that you can specify for execution by the Reader/Writer. Set these codes in the Command Code field in the command area.

Classification	Command code	Command name	Reference
RF Tag communications	0001 hex	READ ID	p.154
	0002 hex	READ DATA	p.155
	0003 hex	WRITE DATA	p.156
	0004 hex	LOCK	p.157
	0005 hex	DATA FILL	p.158
	0006 hex	RF TAG OVERWRITE COUNT CONTROL	p.159
	0007 hex	RESTORE DATA	p.160
	0008 hex	COPY DATA	p.161
Reader/Writer settings	1000 hex	INITIALIZE	p.163
	1001 hex	SET RF TAG COMMUNICATIONS	p.164
	1002 hex	GET RF TAG COMMUNICATIONS SETTINGS	p.165
	1003 hex	SET MULTI-READER/WRITER OPERATION	p.166
	1004 hex	GET MULTI-READER/WRITER SETTINGS	p.168
Reader/Writer information acquisition	2000 hex	GET MODEL INFORMATION	p.170
	2001 hex	GET FIRMWARE VERSION	p.171
	2002 hex	GET OPERATING TIME	p.172
	2003 hex	MEASURE NOISE	p.173
	2004 hex	GET COMMAND ERROR LOG	p.174
	2005 hex	GET RESTORE INFORMATION	p.176
	2006 hex	GET MULTI-READER/WRITER STATUS	p.178
Reader/Writer operation control	3000 hex	RESET	p.179

■ Error Codes

The following tables list the error codes that indicate the response results from the Reader/Writer. These codes are set in the Error Code field in the response area.

If an error response is returned (i.e., an error code other than 0000 hex), a record is stored in the command error log in the Reader/Writer. Records are not stored for errors for which responses are not returned to the host device. Reader/Writer operating errors and system errors are recorded in the system error log in the Reader/Writer.

▪ Normal Code

Error code name	Error code	Description
Normal end	0000 hex	Processing ended normally.

▪ Interrupted Processing

Error code name	Error code	Description
Communications canceled	0001 hex	Processing was canceled when an OFF EXE signal was received before an RF Tag was detected. (The contents of the RF Tag was not changed, even for a WRITE DATA command.)
Communications aborted	0002 hex	Processing was canceled when an OFF EXE signal was received during communications with an RF Tag. (For a WRITE DATA command, the contents of the RF Tag may have been changed.)

▪ Command Errors

Error code name	Error code	Description
Unknown command error	1003 hex	A command that is not supported by the Reader/Writer was received.
Command parameter error	1005 hex	There was an error in the parameters in the received command data.
Execution status error	1006 hex	The Reader/Writer could not execute the command that was received.

▪ RF Tag Communications Errors

Error code name	Error code	Description
RF Tag missing error	2001 hex	There is no RF Tag in the communications field.
RF Tag communications error	2002 hex	Communications with the RF Tag did not end normally.
UID mismatch error	2003 hex	An RF Tag with the specified ID was not in the communications field.
RF Tag address error	2004 hex	The access address for the RF Tag is outside of the area supported by the target RF Tag.
RF Tag lock error	2005 hex	An attempt was made to write data to a locked area.
Verification error	2006 hex	Processing to write data to the RF Tag did not end normally.
RF Tag data lost error	2007 hex	Processing to write data to the RF Tag did not end normally. (Data may have been lost and must be restored.)
RF Tag system error	2008 hex	The RF Tag returned an error response.
RF Tag overwriting error	2009 hex	The overwrite limit was exceeded for overwrite count control processing.
Reader/Writer connection error	200A hex	When executing the COPY DATA command, communications could not be established with the copy destination Reader/Writer.
Communications connection error between Reader/Writers	200B hex	When executing multi-Reader/Writer functions, communications could not be established with a Slave Reader/Writer.

▪ Reader/Writer Operation Errors

Error code name	Error code	Description
Unfixed operation mode error	8001 hex	The control signal was not stable when the Reader/Writer was started. A record is stored only in the system error log.
User setting error	8002 hex	An error was detected in user configuration memory when the Reader/Writer was started. A record is stored only in the system error log. The classification of the setting is given in attached information 1. 0000 0001 hex: Network setting 0000 0002 hex: RF Tag communications setting 0000 0003 hex: Multi-Reader/Writer setting
Multi-Reader/Writer execution error	8003 hex	A set value was detected when the Reader/Writer was started that prevents execution of multi-Reader/Writer operation. The reason for the error is given in attached information 1. 0000 0001 hex: The combination of the Multi-Reader/Writer Mode and the communications option prevented execution. 0000 0002 hex: This Reader/Writer has the same IP address as the Slave Reader/Writer.

▪ System Errors

Error code name		Error code	Description
System startup errors			
	System memory error	F001 hex	An error was detected in system memory. A record is stored only in the system error log.
	Profile error	F002 hex	An error was detected in the profile data. A record is stored only in the system error log.
Hardware faults			
	IC error	F011 hex	An error was detected in an IC in the Reader/Writer.
	Configuration memory error	F012 hex	An error was detected when accessing configuration memory.

■ Device Information

The following table lists the device information that indicates the Reader/Writer in which the error occurred.

These codes are set in the Response Information 1 field in the response area.

Device information	Description
0000 hex	An error occurred in the local Reader/Writer.
0100 hex	• An error occurred in the destination Reader/Writer when copying data. • An error occurred in Slave Reader/Writer No. 1 for multi-Reader/Writer operation.
0200 hex	An error occurred in Slave Reader/Writer No. 2 for multi-Reader/Writer operation.
0300 hex	An error occurred in Slave Reader/Writer No. 3 for multi-Reader/Writer operation.
0400 hex	An error occurred in Slave Reader/Writer No. 4 for multi-Reader/Writer operation.
0500 hex	An error occurred in Slave Reader/Writer No. 5 for multi-Reader/Writer operation.
0600 hex	An error occurred in Slave Reader/Writer No. 6 for multi-Reader/Writer operation.
0700 hex	An error occurred in Slave Reader/Writer No. 7 for multi-Reader/Writer operation.

■ Communications Diagnostics Results

The following table lists the communications diagnostic results that are obtained when the Reader/Writer communicates with an RF Tag.

If communications diagnostics are enabled, these codes are provided to indicate the cause when diagnostics indicate that communications are unstable.

This information is set in the Response Information 2 field in the response area. When this information is set, the RF_WAR (communications unstable) signal turns ON.

Communications diagnostics result	Description
0000 hex	Normal
0001 hex	Insufficient power to send
0002 hex	Insufficient power to receive
0003 hex	Too much noise
0004 hex	Insufficient signal-to-noise ratio

V680S Command Details

READ ID

This command reads the ID code of the RF Tag in the communications field.

▪ Command Area

Signal/data	Data type	Size	Function
CmdCode/Command Code	WORD	2 bytes	0001 hex
CmdParam1/Command Parameter 1	WORD	2 bytes	0000 hex (Not used.)
CmdParam2/Command Parameter 2	WORD	2 bytes	0000 hex (Not used.)

▪ Response Area

Signal/data	Data type	Size	Function
ErrCode/Error Code	WORD	2 bytes	Error code
RespInfo1/Response Information 1	WORD	2 bytes	Device information
RespInfo2/Response Information 2	WORD	2 bytes	Communications diagnostics result
RespData/Response Data	STRUCT	---	---
ID Data	ARRAY[] OF BYTE	8 bytes	ID data read from the RF Tag (always 8 bytes)

▪ Execution Example

Reading the ID Data from the RF Tag

Command Area

Memory offset	Data name	Byte +0		Byte +1	
+2	CmdCode	0	0	0	1
+4	CmdParam1	0	0	0	0
+6	CmdParam2	0	0	0	0

RF Tag UID

66554433221105E0

Response Area

Memory offset	Data name	Byte +0		Byte +1	
+2	ErrCode	0	0	0	0
+4	RespInfo1	0	0	0	0
+6	RespInfo2	0	0	0	0
+8	RespData[0-1]	6	6	5	5
+10	RespData[2-3]	4	4	3	3
+12	RespData[4-5]	2	2	1	1
+14	RespData[6-7]	0	5	E	0

READ DATA

This command reads data from the RF Tag in the communications field.

▪ Command Area

Signal/data	Data type	Size	Function
CmdCode/Command Code	WORD	2 bytes	0002 hex
CmdParam1/Command Parameter 1	WORD	2 bytes	First word address of the data read from the RF Tag 0000 to FFFF hex
CmdParam2/Command Parameter 2	WORD	2 bytes	Data size to read from the RF Tag (in words) 0000 to 0200 hex * The maximum size that you can specify depends on the cyclic data exchange settings.

▪ Response Area

Signal/data	Data type	Size	Function
ErrCode/Error Code	WORD	2 bytes	Error code
RespInfo1/Response Information 1	WORD	2 bytes	Device information
RespInfo2/Response Information 2	WORD	2 bytes	Communications diagnostics result
RespData/Response Data			
Read Data	ARRAY[] OF BYTE	1,000 bytes max.	Data read from the RF Tag

▪ Execution Example

Reading Four Words of Data Starting from Word Address 1234 Hex in the RF Tag

Command Area

Memory offset	Data name	Byte +0		Byte +1	
+2	CmdCode	0	0	0	2
+4	CmdParam1	1	2	3	4
+6	CmdParam2	0	0	0	4

RF Tag Memory

User address	bit15-12	bit11-8	bit7-4	bit3-0
1234 hex	1	1	1	1
1235 hex	2	2	2	2
1236 hex	3	3	3	3
1235 hex	4	4	4	4

Response Area

Memory offset	Data name	Byte +0		Byte +1	
+2	ErrCode	0	0	0	0
+4	RespInfo1	0	0	0	0
+6	RespInfo2	0	0	0	0
+8	RespData[0-1]	1	1	1	1
+10	RespData[2-3]	2	2	2	2
+12	RespData[4-5]	3	3	3	3
+14	RespData[6-7]	4	4	4	4

WRITE DATA

This command writes data to the RF Tag in the communications field.

▪ Command Area

Signal/data	Data type	Size	Function
CmdCode/Command Code	WORD	16 bits	WRITE DATA (0003 hex)
CmdParam1/Command Parameter 1	WORD	16 bits	First word address of the data to write to the RF Tag 0000 to FFFF hex
CmdParam2/Command Parameter 2	WORD	16 bits	Number of words in the RF Tag to write 0000 to 0200 hex * The maximum size that you can specify depends on the cyclic data exchange settings.
CmdData/Command Data			
Data to write	ARRAY[] OF BYTE	1,000 bytes max.	Data to write to RF Tag

▪ Response Area

Signal/data	Data type	Size	Function
ErrCode/Error Code	WORD	2 bytes	Error code
RespInfo1/Response Information 1	WORD	2 bytes	Error device information
RespInfo2/Response Information 2	WORD	2 bytes	Communications diagnostics result

▪ Execution Example

Writing 1111222233334444 to Four Words Starting from Word Address 1234 Hex in the RF Tag

Command Area

Memory offset	Data name	Byte +0		Byte +1	
+2	CmdCode	0	0	0	3
+4	CmdParam1	1	2	3	4
+6	CmdParam2	0	0	0	4
+8	CmdData[0-1]	1	1	1	1
+10	CmdData[2-3]	2	2	2	2
+12	CmdData[4-5]	3	3	3	3
+14	CmdData[6-7]	4	4	4	4

Response Area

Memory offset	Data name	Byte +0		Byte +1	
+2	ErrCode	0	0	0	0
+4	RespInfo1	0	0	0	0
+6	RespInfo2	0	0	0	0

RF Tag Memory

User address	bit15-12	bit11-8	bit7-4	bit3-0
1234 hex	1	1	1	1
1235 hex	2	2	2	2
1236 hex	3	3	3	3
1235 hex	4	4	4	4

LOCK

This command locks the memory of the RF Tag in the communications field.
Memory cannot be written again after it is locked. There is also no way to unlock memory.

▪ Command Area

Signal/data	Data type	Size	Function
CmdCode/Command Code	WORD	2 bytes	0004 hex
CmdParam1/Command Parameter 1	WORD	2 bytes	First block or sector number to lock in the RF Tag 0000 to FFFF hex
CmdParam2/Command Parameter 2	WORD	2 bytes	Number of blocks or sectors to lock in the RF Tag 0001 to FFFF hex

▪ Response Area

Signal/data	Data type	Size	Function
ErrCode/Error Code	WORD	2 bytes	Error code
RespInfo1/Response Information 1	WORD	2 bytes	Device information
RespInfo2/Response Information 2	WORD	2 bytes	Communications diagnostics result

▪ Execution Example

Locking Four Blocks/Sectors Starting from Block/Sector 12 in the RF Tag

Command Area

Memory offset	Data name	Byte +0		Byte +1	
+2	CmdCode	0	0	0	4
+4	CmdParam1	0	0	0	C
+6	CmdParam2	0	0	0	4

Response Area

Memory offset	Data name	Byte +0		Byte +1	
+2	ErrCode	0	0	0	0
+4	RespInfo1	0	0	0	0
+6	RespInfo2	0	0	0	0

CHECK!

The unit for locking memory depends on the RF Tag.
Refer to *RF Tag Memory Map* in *Section 11 Appendices* for details.
p.293

DATA FILL

This command fills the specified number of words in the RF Tag in the communications field with the specified data.

▪ Command Area

Signal/data	Data type	Size	Function
CmdCode/Command Code	WORD	2 bytes	0005 hex
CmdParam1/Command Parameter 1	WORD	2 bytes	First word address of the data to write to the RF Tag 0000 to FFFF hex
CmdParam2/Command Parameter 2	WORD	2 bytes	Number of words in the RF Tag to write 0000 hex: Specifies the entire area. 0001 to FFFF hex: Specified size
CmdData/Command Data			
Fill Data	ARRAY[] OF BYTE	2 bytes	Fill data to write to the RF Tag (always one word)

▪ Response Area

Signal/data	Data type	Size	Function
ErrCode/Error Code	WORD	2 bytes	Error code
RespInfo1/Response Information 1	WORD	2 bytes	Device information
RespInfo2/Response Information 2	WORD	2 bytes	Communications diagnostics result

▪ Execution Example

Writing 5A5A Hex to Four Words Starting from Word Address 1234 Hex in the RF Tag

Command Area

Memory offset	Data name	Byte +0		Byte +1	
+2	CmdCode	0	0	0	5
+4	CmdParam1	1	2	3	4
+6	CmdParam2	0	0	0	4
+8	CmdData[0-1]	5	A	5	A

Response Area

Memory offset	Data name	Byte +0		Byte +1	
+2	ErrCode	0	0	0	0
+4	RespInfo1	0	0	0	0
+6	RespInfo2	0	0	0	0

RF Tag Memory

User address	bit15-12	bit11-8	bit7-4	bit3-0
1234 hex	5	A	5	A
1235 hex	5	A	5	A
1236 hex	5	A	5	A
1235 hex	5	A	5	A

RF TAG OVERWRITE COUNT CONTROL

This command is used to control the number of times RF Tags are overwritten.
You can use it for RF Tags that have EEPROM.

▪ Command Area

Signal/data	Data type	Size	Function
CmdCode/Command Code	WORD	2 bytes	0006 hex
CmdParam1/Command Parameter 1	WORD	2 bytes	Overwrite count control operation 0000 hex: Initialization 0001 hex: Subtraction 0002 hex: Addition
CmdParam2/Command Parameter 2	WORD	2 bytes	First word address of the overwrite count area to maintain in the RF Tag 0000 to FFFF hex
CmdData/Command Data			
Count	UDINT	4 bytes	Initialize: The overwrite count to set in the RF Tag Addition/Subtraction: The count to add to or subtract from the current value maintained in the RF Tag 0000 to FFFF hex

▪ Response Area

Signal/data	Data type	Size	Function
ErrCode/Error Code	WORD	2 bytes	Error code
RespInfo1/Response Information 1	WORD	2 bytes	Device information
RespInfo2/Response Information 2	WORD	2 bytes	Communications diagnostics result

▪ Execution Example

Initializing Word Address 1234 Hex in the RF Tag to a Count of 5,000 (1388 Hex) as the Overwrite Count Areat

Command Area

Memory offset	Data name	Byte +0		Byte +1	
+2	CmdCode	0	0	0	6
+4	CmdParam1	0	0	0	0
+6	CmdParam2	1	2	3	4
+8	CmdData[0-1]	0	0	0	0
+10	CmdData[2-3]	1	3	8	8

Response Area

Memory offset	Data name	Byte +0		Byte +1	
+2	ErrCode	0	0	0	0
+4	RespInfo1	0	0	0	0
+6	RespInfo2	0	0	0	0

RF Tag Memory

User address	bit15-12	bit11-8	bit7-4	bit3-0
1234 hex	0	0	0	0
1235 hex	1	3	8	8

RESTORE DATA

This command restores the RF Tag data that is held in the Reader/Writer. You can use it for RF Tags that have EEPROM.

You can restore RF Tag data only when the RF Tag in the communications field matches the held RF Tag ID.

▪ Command Area

Signal/data	Data type	Size	Function
CmdCode/Command Code	WORD	2 bytes	0007 hex
CmdParam1/Command Parameter 1	WORD	2 bytes	0000 hex (Not used.)
CmdParam2/Command Parameter 2	WORD	2 bytes	0000 hex (Not used.)

▪ Response Area

Signal/data	Data type	Size	Function
ErrCode/Error Code	WORD	2 bytes	Error code
RespInfo1/Response Information 1	WORD	2 bytes	Device information
RespInfo2/Response Information 2	WORD	2 bytes	Communications diagnostics result

▪ Execution Example

Restoring Data When Writing to an RF Tag Fails and an RF Tag Data Lost Error Occurs

Command Area

Memory offset	Data name	Byte +0		Byte +1	
+2	CmdCode	0	0	0	7
+4	CmdParam1	0	0	0	0
+6	CmdParam2	0	0	0	0

Response Area

Memory offset	Data name	Byte +0		Byte +1	
+2	ErrCode	0	0	0	0
+4	RespInfo1	0	0	0	0
+6	RespInfo2	0	0	0	0

Information to Restore

User address	1234	
Data size	0004	
Data	11	22
	33	44
	55	66
	77	88

RF Tag Memory

User address	bit15-12	bit11-8	bit7-4	bit3-0
1234 hex	1	1	2	2
1235 hex	3	3	4	4
1236 hex	5	5	6	6
1235 hex	7	7	8	8

COPY DATA

This command uses two Reader/Writers to copy data from an RF Tag in the communications field of one Reader/Writer (A) to the RF Tag in the communications field of another Reader/Writer (B).

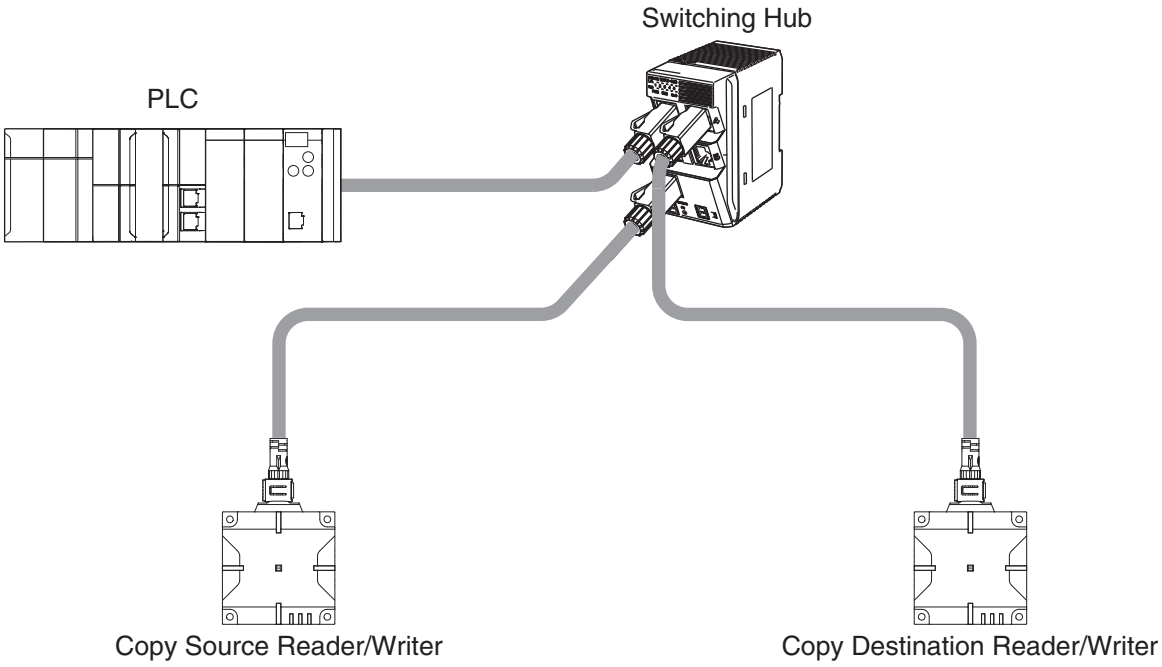

▪ Command Area

Signal/data	Data type	Size	Function
CmdCode/Command Code	WORD	2 bytes	0008 hex
CmdParam1/Command Parameter 1	WORD	2 bytes	First word address of the data to copy from the RF Tag 0000 to FFFF hex
CmdParam2/Command Parameter 2	WORD	2 bytes	Number of words in the RF Tag to copy 0001 to 01F4 hex
CmdData/Command Data			
IP Address	DWORD	4 bytes	IP address of Reader/Writer at the copy destination 0000 0000 to FFFF FFFF hex Example: C0A801C8 hex (192.168.1.200)

▪ Response Area

Signal/data	Data type	Size	Function
ErrCode/Error Code	WORD	2 bytes	Error code
RespInfo1/Response Information 1	WORD	2 bytes	Device information
RespInfo2/Response Information 2	WORD	2 bytes	Communications diagnostics result

▪ Execution Example

Copying Four Words of Data Starting from Word Address 1234 Hex in the RF Tag to an RF Tag in the Communications Field of the Reader/Writer with IP Address 192.168.1.201 (C0A801C9 Hex)

Command Area

Memory offset	Data name	Byte +0		Byte +1	
+2	CmdCode	0	0	0	8
+4	CmdParam1	1	2	3	4
+6	CmdParam2	0	0	0	4
+8	CmdData[0-1]	C	0	A	8
+10	CmdData[2-3]	0	1	C	9

Response Area

Memory offset	Data name	Byte +0		Byte +1	
+2	ErrCode	0	0	0	0
+4	RespInfo1	0	0	0	0
+6	RespInfo2	0	0	0	0

RF Tag Memory in the Copy Source Reader/Writer

User address	bit15-12	bit11-8	bit7-4	bit3-0
1234 hex	1	1	2	2
1235 hex	3	3	4	4
1236 hex	5	5	6	6
1235 hex	7	7	8	8

RF Tag Memory in the Copy Destination Reader/Writer

User address	bit15-12	bit11-8	bit7-4	bit3-0
1234 hex	1	1	2	2
1235 hex	3	3	4	4
1236 hex	5	5	6	6
1235 hex	7	7	8	8

The operation indicator on the copy source Reader/Writer will change as shown in the following table.

		Copy destination		
		Communications normal (stable communications): Indicator lights green.	Communications normal (unstable communications): Indicator lights yellow.	Communications failed: Indicator lights red.
Copy source	Communications normal (stable communications): Indicator lights green.	Communications normal (stable communications): Indicator lights green.	Communications normal (unstable communications): Indicator lights yellow.	Communications failed: Indicator lights red.
	Communications normal (unstable communications): Indicator lights yellow.	Communications normal (unstable communications): Indicator lights yellow.	Communications normal (unstable communications): Indicator lights yellow.	Communications failed: Indicator lights red.
	Communications failed: Indicator lights red.	Communications failed: Indicator lights red.	Communications failed: Indicator lights red.	Communications failed: Indicator lights red.

CHECK!

To check the communications diagnostics result of the copy destination Reader/Writer, use the Web server function to check the copy destination Reader/Writer separately.

Refer to *Web Server* in *Section 6 Functions* for detailed information on Web server function.

p.107

INITIALIZE

This command restores the Reader/Writer settings to their default values.

▪ Command Area

Signal/data	Data type	Size	Function
CmdCode/Command Code	WORD	2 bytes	1000 hex
CmdParam1/Command Parameter 1	WORD	2 bytes	0000 hex (Not used.)
CmdParam2/Command Parameter 2	WORD	2 bytes	0000 hex (Not used.)

▪ Response Area

Signal/data	Data type	Size	Function
ErrCode/Error Code	WORD	2 bytes	Error Code
RespInfo1/Response Information 1	WORD	2 bytes	0000 hex (Not used.)
RespInfo2/Response Information 2	WORD	2 bytes	0000 hex (Not used.)

▪ Execution Example

Initializing All Settings

Command Area

Memory offset	Data name	Byte +0		Byte +1	
+2	CmdCode	1	0	0	0
+4	CmdParam1	0	0	0	0
+6	CmdParam2	0	0	0	0

Response Area

Memory offset	Data name	Byte +0		Byte +1	
+2	ErrCode	0	0	0	0
+4	RespInfo1	0	0	0	0
+6	RespInfo2	0	0	0	0

SET RF TAG COMMUNICATIONS

This command sets the RF Tag communications conditions in the Reader/Writer (communications option, communications speed, and write verification).

▪ Command Area

Signal/data	Data type	Size	Function
CmdCode/Command Code	WORD	2 bytes	1001 hex
CmdParam1/Command Parameter 1	WORD	2 bytes	0000 hex (Not used.)
CmdParam2/Command Parameter 2	WORD	2 bytes	0000 hex (Not used.)
CmdData/Command Data			
Communications Option	WORD	2 bytes	0000 hex: Once 0001 hex: Repeat 0002 hex: FIFO Repeat (Without ID code check) 0003 hex: Auto 0012 hex: FIFO Repeat (With ID code check)
Communications Speed	WORD	2 bytes	0000 hex: High speed 0001 hex: Normal speed
Write Verification	WORD	2 bytes	0000 hex: Do not verify. 0001 hex: Verify
Communications Diagnostics	WORD	2 bytes	0000 hex: Disable 0001 hex: Enable

▪ Response Area

Signal/data	Data type	Size	Function
ErrCode/Error Code	WORD	16 bits	Error Code
RespInfo1/Response Information 1	WORD	2 bytes	0000 hex (Not used.)
RespInfo2/Response Information 2	WORD	2 bytes	0000 hex (Not used.)

▪ Execution Example

Setting the Communications Option to Repeat, Setting the Communications Speed to Standard, Disabling Write Verification, and Enabling Communications Diagnostics

Command Area

Memory offset	Data name	Byte +0		Byte +1	
+2	CmdCode	1	0	0	1
+4	CmdParam1	0	0	0	0
+6	CmdParam2	0	0	0	0
+8	CmdData[0-1]	0	0	0	1
+10	CmdData[2-3]	0	0	0	1
+12	CmdData[4-5]	0	0	0	0
+14	CmdData[6-7]	0	0	0	1

Response Area

Memory offset	Data name	Byte +0		Byte +1	
+2	ErrCode	0	0	0	0
+4	RespInfo1	0	0	0	0
+6	RespInfo2	0	0	0	0

GET RF TAG COMMUNICATIONS SETTINGS

This command reads the RF Tags communications conditions from the Reader/Writer (communications option, communications speed, and write verification).

▪ Command Area

Signal/data	Data type	Size	Function
CmdCode/Command Code	WORD	2 bytes	1002 hex
CmdParam1/Command Parameter 1	WORD	2 bytes	0000 hex (Not used.)
CmdParam2/Command Parameter 2	WORD	2 bytes	0000 hex (Not used.)

▪ Response Area

Signal/data	Data type	Size	Function
ErrCode/Error Code	WORD	2 bytes	Error code
RespInfo1/Response Information 1	WORD	2 bytes	0000 hex (Not used.)
RespInfo2/Response Information 2	WORD	2 bytes	0000 hex (Not used.)
RespData/Response Data			
Communications Option	WORD	2 bytes	0000 hex: Once 0001 hex: Repeat 0002 hex: FIFO Repeat (Without ID code check) 0003 hex: Auto 0012 hex: FIFO Repeat (With ID code check)
Communications Speed	WORD	2 bytes	0000 hex: High speed 0001 hex: Normal speed
Write Verification	WORD	2 bytes	0000 hex: Do not verify. 0001 hex: Verify
Communications Diagnostics	WORD	2 bytes	0000 hex: Disable 0001 hex: Enable

▪ Execution Example

Reading the Communications Settings When the Communications Option Is Set to Repeat, the Communications Speed Is Set to Standard, Write Verification Is Disabled, and Communications Diagnostics Are Enabled

Command Area

Memory offset	Data name	Byte +0		Byte +1	
+2	CmdCode	1	0	0	2
+4	CmdParam1	0	0	0	0
+6	CmdParam2	0	0	0	0

Response Area

Memory offset	Data name	Byte +0		Byte +1	
+2	ErrCode	0	0	0	0
+4	RespInfo1	0	0	0	0
+6	RespInfo2	0	0	0	0
+8	RespData[0-1]	0	0	0	1
+10	RespData[2-3]	0	0	0	1
+12	RespData[4-5]	0	0	0	0
+14	RespData[6-7]	0	0	0	1

SET MULTI-READER/WRITER OPERATION

This command sets multi-Reader/Writer operation.

▪ Command Area

Signal/data	Data type	Size	Function
CmdCode/Command Code	WORD	2 bytes	1003 hex
CmdParam1/Command Parameter 1	WORD	2 bytes	0000 hex (Not used.)
CmdParam2/Command Parameter 2	WORD	2 bytes	0000 hex (Not used.)
CmdData/Command Data			
Multi-Reader/Writer Mode	WORD	2 bytes	0000 hex: Disable 0001 hex: Enable Field Extension Mode 0002 hex: Enable High-speed Traveling Mode
Number of Slave Reader/Writers	WORD	2 bytes	Number of Reader/Writers linked with multi-Reader/Writer operation 0000 to 0007 hex * Specify 0000 hex if multi-Reader/Writer operation is disabled.
IP Address of Slave Reader/Writer No. 1	DWORD	4 bytes	IP addresses of Slave Reader/Writers 0000 0000 to FFFF FFFF hex Example: C0A801C8 hex (192.168.1.200) * Specify 0000 0000 hex if multi-Reader/Writer operation is disabled or the Slave Reader/Writer is not used.
IP Address of Slave Reader/Writer No. 2	DWORD	4 bytes	
IP Address of Slave Reader/Writer No. 3	DWORD	4 bytes	
IP Address of Slave Reader/Writer No. 4	DWORD	4 bytes	
IP Address of Slave Reader/Writer No. 5	DWORD	4 bytes	
IP Address of Slave Reader/Writer No. 6	DWORD	4 bytes	
IP Address of Slave Reader/Writer No. 7	DWORD	4 bytes	

▪ Response Area

Signal/data	Data type	Size	Function
ErrCode/Error Code	WORD	2 bytes	Error code
RespInfo1/Response Information 1	WORD	2 bytes	0000 hex (Not used.)
RespInfo2/Response Information 2	WORD	2 bytes	0000 hex (Not used.)

▪ Execution Example

Setting the Multi-Reader/Writer Mode to Field Extension Mode, the Number of Slave Reader/Writers to 3, and the IP Addresses of Slaves No. 1, No. 2, and No. 3 to 192.168.1.201, 192.168.1.202, and 192.168.1.203, Respectively

Command Area

Memory offset	Data name	Byte +0		Byte +1		
+2	CmdCode	1	0	0	3	
+4	CmdParam1	0	0	0	0	
+6	CmdParam2	0	0	0	0	
+8	CmdData[0-1]	0	0	0	1	
+10	CmdData[2-3]	0	0	0	3	
+12	CmdData[4-5]	C	0	A	8	} IP address of Slave Reader/Writer No. 1
+14	CmdData[6-7]	0	1	C	9	
+16	CmdData[8-9]	C	0	A	8	} IP address of Slave Reader/Writer No. 2
+18	CmdData[10-11]	0	1	C	A	
+20	CmdData[12-13]	C	0	A	8	
+22	CmdData[14-15]	0	1	C	B	
+24	CmdData[16-17]	0	0	0	0	
+26	CmdData[18-19]	0	0	0	0	
+28	CmdData[20-21]	0	0	0	0	
+30	CmdData[22-23]	0	0	0	0	
+32	CmdData[24-25]	0	0	0	0	} IP address of Slave Reader/Writer No. 6
+34	CmdData[26-27]	0	0	0	0	
+36	CmdData[28-29]	0	0	0	0	} IP address of Slave Reader/Writer No. 7
+38	CmdData[30-31]	0	0	0	0	

Response Area

Memory offset	Data name	Byte +0		Byte +1	
+2	ErrCode	0	0	0	0
+4	RespInfo1	0	0	0	0
+6	RespInfo2	0	0	0	0

GET MULTI-READER/WRITER SETTINGS

You can use this command to check the multi-Reader/Writer settings in a Reader/Writer.

▪ Command Area

Signal/data	Data type	Size	Function
CmdCode/Command Code	WORD	2 bytes	1004 hex
CmdParam1/Command Parameter 1	WORD	2 bytes	0000 hex (Not used.)
CmdParam2/Command Parameter 2	WORD	2 bytes	0000 hex (Not used.)

▪ Response Area

Signal/data	Data type	Size	Function
ErrCode/Error Code	WORD	2 bytes	Error code
RespInfo1/Response Information 1	WORD	2 bytes	0000 hex (Not used.)
RespInfo2/Response Information 2	WORD	2 bytes	0000 hex (Not used.)
RespData/Response Data			
Multi-Reader/Writer Mode	WORD	2 bytes	0000 hex: Disable 0001 hex: Enable Field Extension Mode 0002 hex: Enable High-speed Traveling Mode
Number of Slave Reader/Writers	WORD	2 bytes	Number of Reader/Writers linked with multi-Reader/Writer operation 0000 to 0007 hex
IP Address of Slave Reader/Writer No. 1	DWORD	4 bytes	IP addresses of Slave Reader/Writers 0000 0000 to FFFF FFFF hex Example: C0A801C8 hex (192.168.1.200)
IP Address of Slave Reader/Writer No. 2	DWORD	4 bytes	
IP Address of Slave Reader/Writer No. 3	DWORD	4 bytes	
IP Address of Slave Reader/Writer No. 4	DWORD	4 bytes	
IP Address of Slave Reader/Writer No. 5	DWORD	4 bytes	
IP Address of Slave Reader/Writer No. 6	DWORD	4 bytes	
IP Address of Slave Reader/Writer No. 7	DWORD	4 bytes	

▪ Execution Example

Reading the Multi-Read/Writer Settings When the Multi-Reader/Writer Mode Is Set to Field Extension Mode, the Number of Slave Reader/Writers Is Set to 3, and the IP Addresses of Slaves No. 1, No. 2, and No. 3 Are Set to 192.168.1.201, 192.168.1.202, and 192.168.1.203, Respectively

Command Area

Memory offset	Data name	Byte +0		Byte +1	
+2	CmdCode	1	0	0	4
+4	CmdParam1	0	0	0	0
+6	CmdParam2	0	0	0	0

Response Area

Memory offset	Data name	Byte +0		Byte +1		
+2	ErrCode	0	0	0	0	
+4	RespInfo1	0	0	0	0	
+6	RespInfo2	0	0	0	0	
+8	RespData[0-1]	0	0	0	1	
+10	RespData[2-3]	0	0	0	3	
+12	RespData[4-5]	C	0	A	8	IP address of Slave Reader/Writer No. 1
+14	RespData[6-7]	0	1	C	9	
+16	RespData[8-9]	C	0	A	8	IP address of Slave Reader/Writer No. 2
+18	RespData[10-11]	0	1	C	A	
+20	RespData[12-13]	C	0	A	8	IP address of Slave Reader/Writer No. 2
+22	RespData[14-15]	0	1	C	B	
+24	RespData[16-17]	0	0	0	0	
+26	RespData[18-19]	0	0	0	0	
+28	RespData[20-21]	0	0	0	0	
+30	RespData[22-23]	0	0	0	0	
+32	RespData[24-25]	0	0	0	0	
+34	RespData[26-27]	0	0	0	0	
+36	RespData[28-29]	0	0	0	0	
+38	RespData[30-31]	0	0	0	0	

GET MODEL INFORMATION

This command reads the model of the Reader/Writer.

▪ Command Area

Signal/data	Data type	Size	Function
CmdCode/Command Code	WORD	2 bytes	2000 hex
CmdParam1/Command Parameter 1	WORD	2 bytes	0000 hex (Not used.)
CmdParam2/Command Parameter 2	WORD	2 bytes	0000 hex (Not used.)

▪ Response Area

Signal/data	Data type	Size	Function
ErrCode/Error Code	WORD	2 bytes	Error code
RespInfo1/Response Information 1	WORD	2 bytes	0000 hex (Not used.)
RespInfo2/Response Information 2	WORD	2 bytes	0000 hex (Not used.)
RespData/Response Data			
Model Number Information	ARRAY[] OF BYTE	32 bytes	32 bytes of ASCII text max. (end code: 0000 hex)

▪ Execution Example

Reading the Model When a V680S-HMD63-PNT Reader/Writer Is Being Used

Command Area

Memory offset	Data name	Byte +0		Byte +1	
+2	CmdCode	2	0	0	0
+4	CmdParam1	0	0	0	0
+6	CmdParam2	0	0	0	0

Response Area

Memory offset	Data name	Byte +0		Byte +1	
+2	ErrCode	0	0	0	0
+4	RespInfo1	0	0	0	0
+6	RespInfo2	0	0	0	0
+8	RespData[0-1]	5	6	3	6
+10	RespData[2-3]	3	8	3	0
+12	RespData[4-5]	5	3	2	D
+14	RespData[6-7]	4	8	4	D
+16	RespData[8-9]	4	4	3	6
+18	RespData[10-11]	3	3	2	D
+20	RespData[12-13]	4	5	4	9
+22	RespData[14-15]	5	0	0	0
+24	RespData[16-17]	0	0	0	0
+26	RespData[18-19]	0	0	0	0
+28	RespData[20-21]	0	0	0	0
+30	RespData[22-23]	0	0	0	0
+32	RespData[24-25]	0	0	0	0
+34	RespData[26-27]	0	0	0	0
+36	RespData[28-29]	0	0	0	0
+38	RespData[30-31]	0	0	0	0

Model number information obtained from Reader/Writer

GET FIRMWARE VERSION

This command reads the firmware version of the Reader/Writer.

▪ Command Area

Signal/data	Data type	Size	Function
CmdCode/Command Code	WORD	2 bytes	2001 hex
CmdParam1/Command Parameter 1	WORD	2 bytes	0000 hex (Not used.)
CmdParam2/Command Parameter 2	WORD	2 bytes	0000 hex (Not used.)

▪ Response Area

Signal/data	Data type	Size	Function
ErrCode/Error Code	WORD	2 bytes	Error code
RespInfo1/Response Information 1	WORD	2 bytes	0000 hex (Not used.)
RespInfo2/Response Information 2	WORD	2 bytes	0000 hex (Not used.)
RespData/Response Data			
Run Mode Program Major Version	WORD	2 bytes	0000 to 0099 hex (BCD)
Run Mode Program Minor Version	WORD	2 bytes	0000 to 0099 hex (BCD)
Run Mode Program Revision	WORD	2 bytes	0000 to 9999 hex (BCD)
Safe Mode Program Major Version	WORD	2 bytes	0000 to 0099 hex (BCD)
Safe Mode Program Minor Version	WORD	2 bytes	0000 to 0099 hex (BCD)
Safe Mode Program Revision	WORD	2 bytes	0000 to 9999 hex (BCD)

▪ Execution Example

Reading the Firmware Version When the Run Mode Program Version is Version 1.2.3 and the Safe Mode Program Version is Version 1.2.2

Command Area

Memory offset	Data name	Byte +0		Byte +1	
+2	CmdCode	2	0	0	1
+4	CmdParam1	0	0	0	0
+6	CmdParam2	0	0	0	0

Response Area

Memory offset	Data name	Byte +0		Byte +1		
+2	ErrCode	0	0	0	0	
+4	RespInfo1	0	0	0	0	
+6	RespInfo2	0	0	0	0	
+8	RespData[0-1]	0	0	0	1	Run Mode program version information
+10	RespData[2-3]	0	0	0	2	
+12	RespData[4-5]	0	0	0	3	
+14	RespData[6-7]	0	0	0	1	Safe Mode program version information
+16	RespData[8-9]	0	0	0	2	
+18	RespData[10-11]	0	0	0	2	

GET OPERATING TIME

This command reads the operating time since the Reader/Writer was started.
The operating time is reset when the Reader/Writer is reset.

▪ Command Area

Signal/data	Data type	Size	Function
CmdCode/Command Code	WORD	2 bytes	2002 hex
CmdParam1/Command Parameter 1	WORD	2 bytes	0000 hex (Not used.)
CmdParam2/Command Parameter 2	WORD	2 bytes	0000 hex (Not used.)

▪ Response Area

Signal/data	Data type	Size	Function
ErrCode/Error Code	WORD	2 bytes	Error code
RespInfo1/Response Information 1	WORD	2 bytes	0000 hex (Not used.)
RespInfo2/Response Information 2	WORD	2 bytes	0000 hex (Not used.)
RespData/Response Data			
Operating time	UDINT	4 bytes	Running time since the Reader/Writer was started (in milliseconds) 0000 0000 to FFFF FFFF hex

▪ Execution Example

Reading the Operating Time When It Is 1,234,567,890 (4996 02D2 hex)

Command Area

Memory offset	Data name	Byte +0		Byte +1	
+2	CmdCode	2	0	0	2
+4	CmdParam1	0	0	0	0
+6	CmdParam2	0	0	0	0

Response Area

Memory offset	Data name	Byte +0		Byte +1	
+2	ErrCode	0	0	0	0
+4	RespInfo1	0	0	0	0
+6	RespInfo2	0	0	0	0
+8	RespData[0-1]	4	9	9	6
+10	RespData[2-3]	0	2	D	2

MEASURE NOISE

This command measures the noise level around the Reader/Writer.

▪ Command Area

Signal/data	Data type	Size	Function
CmdCode/Command Code	WORD	2 bytes	2003 hex
CmdParam1/Command Parameter 1	WORD	2 bytes	0000 hex (Not used.)
CmdParam2/Command Parameter 2	WORD	2 bytes	0000 hex (Not used.)

▪ Response Area

Signal/data	Data type	Size	Function
ErrCode/Error Code	WORD	2 bytes	Error code
RespInfo1/Response Information 1	WORD	2 bytes	0000 hex (Not used.)
RespInfo2/Response Information 2	WORD	2 bytes	0000 hex (Not used.)
RespData/Response Data			
Average Noise Level	UINT	2 bytes	0000 to 0063 hex (level 0 to 99)
Maximum Noise Level	UINT	2 bytes	0000 to 0063 hex (level 0 to 99)
Minimum Noise Level	UINT	2 bytes	0000 to 0063 hex (level 0 to 99)

▪ Execution Example

Measuring the Noise Level When the Average Level Is 51 (0033 Hex), the Maximum Level Is 62 (003E ex), and the Minimum Level Is 41 (0029 Hex)

Command Area

Memory offset	Data name	Byte +0		Byte +1	
+2	CmdCode	2	0	0	3
+4	CmdParam1	0	0	0	0
+6	CmdParam2	0	0	0	0

Response Area

Memory offset	Data name	Byte +0		Byte +1	
+2	ErrCode	0	0	0	0
+4	RespInfo1	0	0	0	0
+6	RespInfo2	0	0	0	0
+8	RespData[0-1]	0	0	3	3
+10	RespData[2-3]	0	0	3	E
+12	RespData[4-5]	0	0	2	9

GET COMMAND ERROR LOG

This command reads the log of command errors that have occurred in the Reader/Writer.
The command error log is reset when the Reader/Writer is restarted.

▪ Command Area

Signal/data	Data type	Size	Function
CmdCode/Command Code	WORD	2 bytes	2004 hex
CmdParam1/Command Parameter 1	WORD	2 bytes	Number of first record to read 0000 to 000F hex (0 to 15)
CmdParam2/Command Parameter 2	WORD	2 bytes	Number of records to read 0001 to 0010 hex (1 to 16) * The maximum number of records that you can specify depends on the cyclic data exchange settings.

▪ Response Area

Signal/data			Data type	Size	Function
ErrCode/Error Code			WORD	2 bytes	Error code
RespInfo1/Response Information 1			WORD	2 bytes	0000 hex (Not used.)
RespInfo2/Response Information 2			WORD	2 bytes	0000 hex (Not used.)
RespData/Response Data					
	Number of Records		UINT	2 bytes	Number of valid records in the command error log 0000 to 0010 hex (1 to 16)
	Newest Record	Operating Time	UDINT	4 bytes	Operating time when the error occurred (unit: ms) 0000 0000 to FFFF FFFF hex
		IP Address of the Remote Device	DWORD	4 bytes	IP address of host device that generated the error 0000 0000 to FFFF FFFF hex Example: C0A801C8 (192.168.1.200)
		Command Code	WORD	2 bytes	Command code for which an error occurred
		Error Code	WORD	2 bytes	Error code of the error that occurred
		Response Information 1	WORD	2 bytes	Response information 1 for the error that occurred
		Response Information 2	WORD	2 bytes	Response information 2 for the error that occurred
	Newest Record – 1	Same as above.	Same as above.	Same as above.	Same as above.
	:	:	:	:	:
	Newest Record – 15	Same as above.	Same as above.	Same as above.	Same as above.

*The maximum size of the response data depends on the tag and tag set settings. Therefore, the number of command error log records that can be read with one operation will vary. A parameter error will occur if the setting exceeds the response data size.

▪ Execution Example

Reading the Two Newest Records from the Command Error Log When Command Errors Occur

* This example assumes that there are the following two valid records in the command error log.

- Error code 2001 hex occurred for command code 0001 hex at the host device (IP address 192.168.1.10) at an operating time of 11,223,344 (00AB 4130 hex).
- Error code 2002 hex occurred for command code 0002 hex at the host device (IP address 192.168.1.10) at an operating time of 11,223,345 (00AB 4131 hex).

Command Area

Memory offset	Data name	Byte +0		Byte +1	
+2	CmdCode	2	0	0	4
+4	CmdParam1	0	0	0	0
+6	CmdParam2	0	0	0	2

Response Area

Memory offset	Data name	Byte +0		Byte +1			
+2	ErrCode	0	0	0	0		
+4	RespInfo1	0	0	0	0		
+6	RespInfo2	0	0	0	0		
+8	RespData[0-1]	0	0	0	2	Number of records	
+10	RespData[2-3]	0	0	4	B	Operating time	Newest record in the command error log
+12	RespData[4-5]	4	1	3	1		
+14	RespData[6-7]	C	0	A	8	IP address	
+16	RespData[8-9]	0	1	0	A		
+18	RespData[10-11]	0	0	0	2	Command code	
+20	RespData[12-13]	2	0	0	2	Error code	
+22	RespData[14-15]	0	0	0	0	Response information 1	
+24	RespData[16-17]	0	0	0	0	Response information 2	
+26	RespData[18-19]	0	0	4	B	Operating time	Newest record – 1 in the command error log
+28	RespData[20-21]	4	1	3	0		
+30	RespData[22-23]	C	0	A	8	IP address	
+32	RespData[24-25]	0	1	0	A		
+34	RespData[26-27]	0	0	0	1	Command code	
+36	RespData[28-29]	2	0	0	1	Error code	
+38	RespData[30-31]	0	0	0	0	Response information 1	
+40	RespData[32-33]	0	0	0	0	Response information 2	
⋮	⋮	⋮	⋮	⋮	⋮		
+250	RespData[242-243]	0	0	0	0	Operating time	Newest record – 15 in the command error log
+252	RespData[244-245]	0	0	0	0		
+254	RespData[246-247]	0	0	0	0	IP address	
+256	RespData[248-249]	0	0	0	0		
+258	RespData[250-251]	0	0	0	0	Command code	
+260	RespData[252-253]	0	0	0	0	Error code	
+262	RespData[254-255]	0	0	0	0	Response information 1	
+264	RespData[256-257]	0	0	0	0	Response information 2	

GET RESTORE INFORMATION

This command reads the restore information from memory in the Reader/Writer.
The restore information is reset when the Reader/Writer is reset.

▪ Command Area

Signal/data	Data type	Size	Function
CmdCode/Command Code	WORD	2 bytes	2005 hex
CmdParam1/Command Parameter 1	WORD	2 bytes	Number of first record to read 0000 to 0007 hex (0 to 7)
CmdParam2/Command Parameter 2	WORD	2 bytes	Number of records to read 0001 to 008 hex (1 to 8) * The maximum number of records that you can specify depends on the cyclic data exchange settings.

▪ Response Area

Signal/data		Data type	Size	Function
ErrCode/Error Code		WORD	2 bytes	Error code
RespInfo1/Response Information 1		WORD	2 bytes	0000 hex (Not used.)
RespInfo2/Response Information 2		WORD	2 bytes	0000 hex (Not used.)
RespData/Response Data				
Number of Records		UINT	2 bytes	Number of valid records in the restore information 0000 to 0008 hex (1 to 8)
Newest Record	Operating Time	UDINT	4 bytes	Operating time in milliseconds when RF Tag data lost error occurred 0000 0000 to FFFF FFFF hex
	RF Tag ID	ARRAY[] OF BYTE	8 bytes	UID of the RF Tag when the RF Tag data lost error occurred
	User Address	WORD	2 bytes	First write address when an RF Tag data lost error occurred
	Data Size	WORD	2 bytes	Write size when an RF Tag data lost error occurred
	Data	BYTE[] OF BYTE	8 bytes	Data in the RF Tag before the write operation when the RF Tag data lost error occurred
Newest Record – 1	Same as above.	Same as above.	Same as above.	Same as above.
:	:	:	:	:
Newest Record – 7	Same as above.	Same as above.	Same as above.	Same as above.

*The maximum size of the response data depends on the tag and tag set settings. Therefore, the number of records of restore information that can be read with one operation will vary. A parameter error will occur if the setting exceeds the response data size.

▪ Execution Example

Reading the Newest Restore Information Record When Writing to an RF Tag Fails and an RF Tag Data Lost Error Occurs

* This example assumes that there is the following one valid record of restore information.

- Operating time: 1,234,567,890 (4996 02D2 hex)
- RF Tag ID: 6655 4433 2211 05E0
- User address: 1234 hex
- Data size: 0004 hex
- Data: 1122 3344 5566 7788 hex

Command Area

Memory offset	Data name	Byte +0		Byte +1	
+2	CmdCode	2	0	0	5
+4	CmdParam1	0	0	0	0
+6	CmdParam2	0	0	0	1

Response Area

Memory offset	Data name	Byte +0		Byte +1			
+2	ErrCode	0	0	0	0		
+4	RespInfo1	0	0	0	0		
+6	RespInfo2	0	0	0	0		
+8	RespData[0-1]	0	0	0	1	Number of records	
+10	RespData[2-3]	4	9	9	6	Operating time	Newest record in restore information
+12	RespData[4-5]	0	2	D	2		
+14	RespData[6-7]	6	6	5	5	RF Tag UID	
+16	RespData[8-9]	4	4	3	3		
+18	RespData[10-11]	2	2	1	1		
+20	RespData[12-13]	0	5	E	0		
+22	RespData[14-15]	1	2	3	4	User address	
+24	RespData[16-17]	0	0	0	4	Data size	
+26	RespData[18-19]	1	1	2	2	Data	
+28	RespData[20-21]	3	3	4	4		
+30	RespData[22-23]	5	5	6	6		
+32	RespData[24-25]	7	7	8	8		
⋮	⋮	⋮	⋮	⋮	⋮		
+256	RespData[248-249]	0	0	0	0	Operating time	Newest record – 7 in restore information
+258	RespData[250-251]	0	0	0	0		
+260	RespData[252-253]	0	0	0	0	RF Tag UID	
+262	RespData[254-255]	0	0	0	0		
+264	RespData[256-257]	0	0	0	0		
+266	RespData[258-259]	0	0	0	0		
+268	RespData[260-262]	0	0	0	0	User address	
+270	RespData[263-264]	0	0	0	0	Data sizes	
+272	RespData[265-266]	0	0	0	0	Data	
+274	RespData[267-268]	0	0	0	0		
+276	RespData[269-270]	0	0	0	0		
+278	RespData[271-272]	0	0	0	0		

GET MULTI-READER/WRITER STATUS

This command reads the Master Reader/Writer and Slave Reader/Writer status when multi-Reader/Writer operation is being used.

▪ Command Area

Signal/data	Data type	Size	Function
CmdCode/Command Code	WORD	2 bytes	2006 hex
CmdParam1/Command Parameter 1	WORD	2 bytes	0000 hex (Not used.)
CmdParam2/Command Parameter 2	WORD	2 bytes	0000 hex (Not used.)

▪ Response Area

Signal/data	Data type	Size	Function
ErrCode/Error Code	WORD	2 bytes	Error code
RespInfo1/Response Information 1	WORD	2 bytes	0000 hex (Not used.)
RespInfo2/Response Information 2	WORD	2 bytes	0000 hex (Not used.)
RespData/Response Data			
Master Status	WORD	2 bytes	Multi-Reader/Writer status of Master Reader/Writer 0000 hex: Disable 1000 hex: Preparing for Field Extension Mode (Detecting Groups) 1001 hex: Ready for Field Extension Mode (Group Detection Completed) 2000 hex: Preparing for High-speed Traveling Mode (Detecting Groups) 2001 hex: Ready for High-speed Traveling Mode (Group Detection Completed)
Slave No. 1 Status	WORD	2 bytes	Connection status of Slave Reader/Writers No. 1 to 7 0000 hex: Not connected. 0001 hex: Connection successful 0002 hex: Connection failed
:	:	:	
Slave No. 7 Status	UINT	2 bytes	

▪ Execution Example

Reading the Multi-Reader/Writer Status When the Reader/Writer Is in Field Extension Mode, the Group Is Being Detected, Connection of Slave Reader/Writer No. 2 Failed, and Slave Reader/Writers No. 3 to 7 Are Not Connected

Command Area

Memory offset	Data name	Byte +0		Byte +1	
+2	CmdCode	2	0	0	6
+4	CmdParam1	0	0	0	0
+6	CmdParam2	0	0	0	0

Response Area

Memory offset	Data name	Byte +0		Byte +1		
+2	ErrCode	0	0	0	0	
+4	RespInfo1	0	0	0	0	
+6	RespInfo2	0	0	0	0	
+8	RespData[0-1]	1	0	0	0	Master Reader/Writer
+10	RespData[2-3]	0	0	0	1	Slave Reader/Writer No. 1
+12	RespData[4-5]	0	0	0	2	Slave Reader/Writer No. 2
+14	RespData[6-7]	0	0	0	0	Slave Reader/Writer No. 3
+16	RespData[8-9]	0	0	0	0	Slave Reader/Writer No. 4
+18	RespData[10-11]	0	0	0	0	Slave Reader/Writer No. 5
+20	RespData[12-13]	0	0	0	0	Slave Reader/Writer No. 6
+22	RespData[14-15]	0	0	0	0	Slave Reader/Writer No. 7

RESET

This command resets the Reader/Writer.

▪ Command Area

Signal/data	Data type	Size	Function
CmdCode/Command Code	WORD	2 bytes	3000 hex
CmdParam1/Command Parameter 1	WORD	2 bytes	0000 hex (Not used.)
CmdParam2/Command Parameter 2	WORD	2 bytes	0000 hex (Not used.)

▪ Response Area

Signal/data	Data type	Size	Function
ErrCode/Error Code	WORD	16 bits	Error code
RespInfo1/Response Information 1	WORD	16 bits	0000 hex (Not used.)
RespInfo2/Response Information 2	WORD	16 bits	0000 hex (Not used.)

▪ Execution Example

Resetting the Reader/Writer

Command Area

Memory offset	Data name	Byte +0		Byte +1	
+2	CmdCode	3	0	0	0
+4	CmdParam1	0	0	0	0
+6	CmdParam2	0	0	0	0

Response Area

Memory offset	Data name	Byte +0		Byte +1	
+2	ErrCode	0	0	0	0
+4	RespInfo1	0	0	0	0
+6	RespInfo2	0	0	0	0

Time Charts

Time Charts

■ Executing RF Tag Communications Commands

▪ Using the Once Communications Option

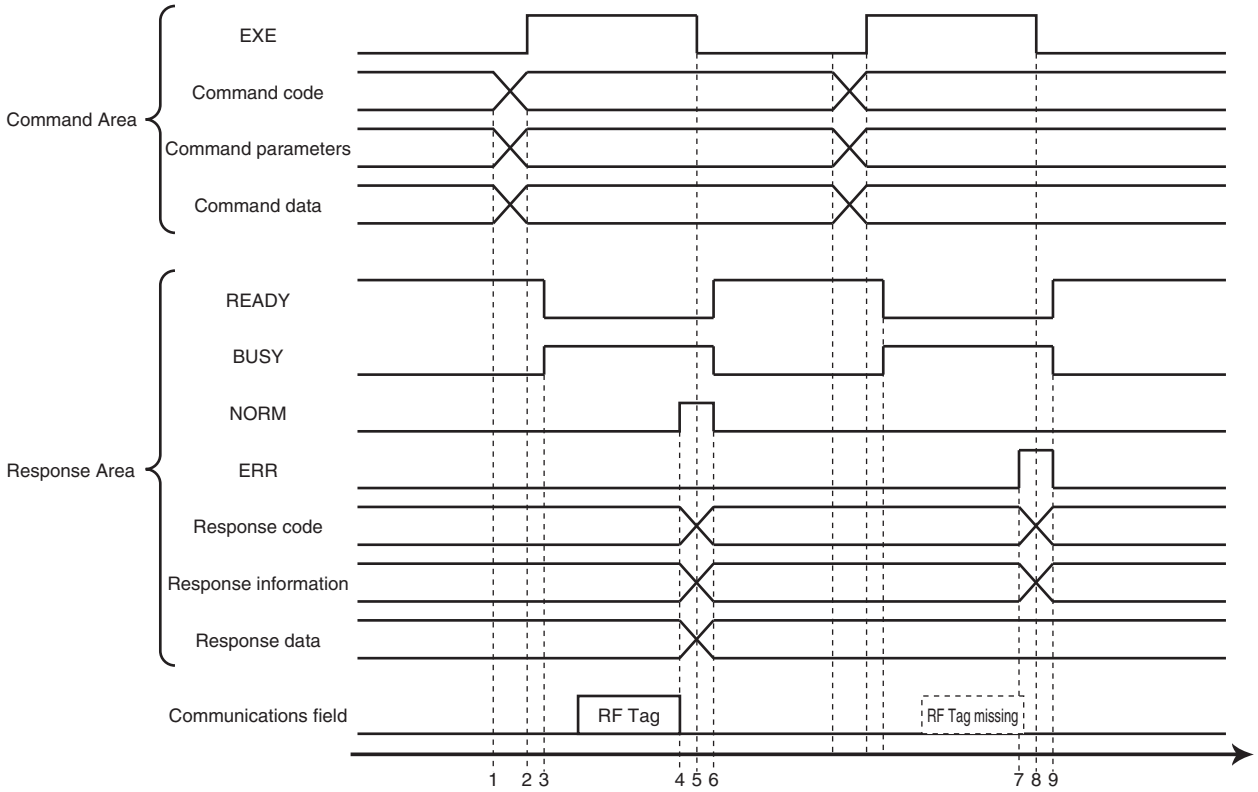

1. The command code, command parameters, and command data are set from the PLC while the READY signal is ON.
2. The user (PLC) turns ON the EXE signal. This tells the Reader/Writer to start execution.
3. When the Reader/Writer receives the instruction to start execution, it turns OFF the READY signal and turns ON the BUSY signal.
4. The Reader/Writer detects an RF Tag and when communications end normally, it sets the response code, response information, and response data and turns ON the NORM signal.
5. The user (PLC) detects that the NORM signal has turned ON and reads the response data. After reading the data, the user (PLC) turns OFF the EXE signal. This tells the Reader/Writer to stop execution.
6. When the Reader/Writer receives the instruction to stop execution, it turns ON the READY signal and turns OFF the BUSY signal and the NORM signal.
7. When command execution ends in an error (e.g., the Reader/Writer does not detect an RF Tag or communications fail), it sets the response code and response information and turns ON the ERR signal.
8. The user (PLC) detects that the ERR signal has turned ON, reads the response code and response information, and checks the error. After checking the error, the user (PLC) turns OFF the EXE signal. This tells the Reader/Writer to stop execution.
9. When the Reader/Writer receives the instruction to stop execution, it turns ON the READY signal and turns OFF the BUSY signal and the ERR signal.

▪ Using the Auto Communications Option

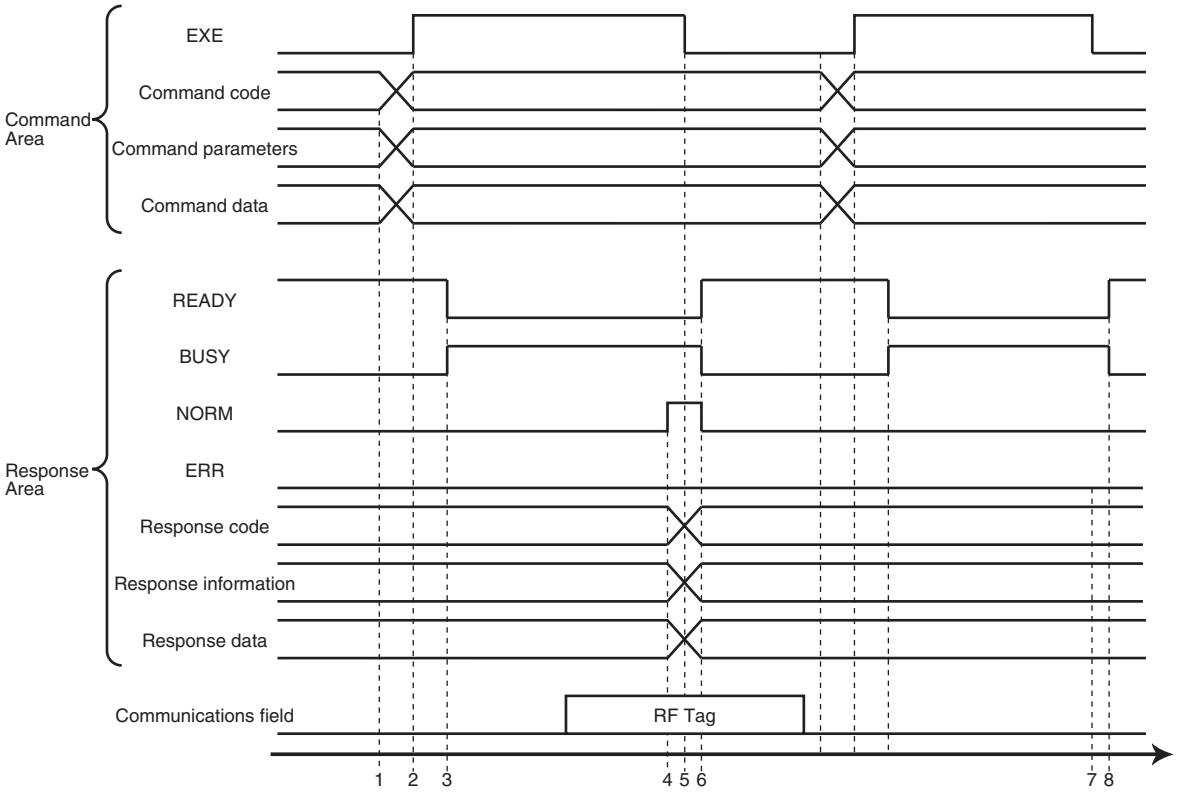

1. The command code, command parameters, and command data are set from the PLC while the READY signal is ON.
2. The user (PLC) turns ON the EXE signal. This tells the Reader/Writer to start execution.
3. When the Reader/Writer receives the instruction to start execution, it turns OFF the READY signal and turns ON the BUSY signal. From this timing, the reader / writer keeps waiting for the RF tag to enter the communication area.
4. The Reader/Writer detects an RF Tag and when communications end normally, it sets the response code, response information, and response data and turns ON the NORM signal. At this time, the NORM LED (green) lights up once.
5. The user (PLC) detects that the NORM signal has turned ON and reads the response data. After reading the data, the user (PLC) turns OFF the EXE signal. This tells the Reader/Writer to stop execution.
6. When the Reader/Writer receives the instruction to stop execution, it turns ON the READY signal and turns OFF the BUSY signal and the NORM signal.
7. If the BUSY signal is ON and the user (PLC) wants to cancel Auto communications, the user (PLC) turns OFF the EXE signal. This tells the Reader/Writer to stop execution.
8. When the Reader/Writer receives the instruction to stop execution, it turns ON the READY signal and turns OFF the BUSY signal and the ERR signal.

▪ Using the Repeat or FIFO Repeat Communications Option

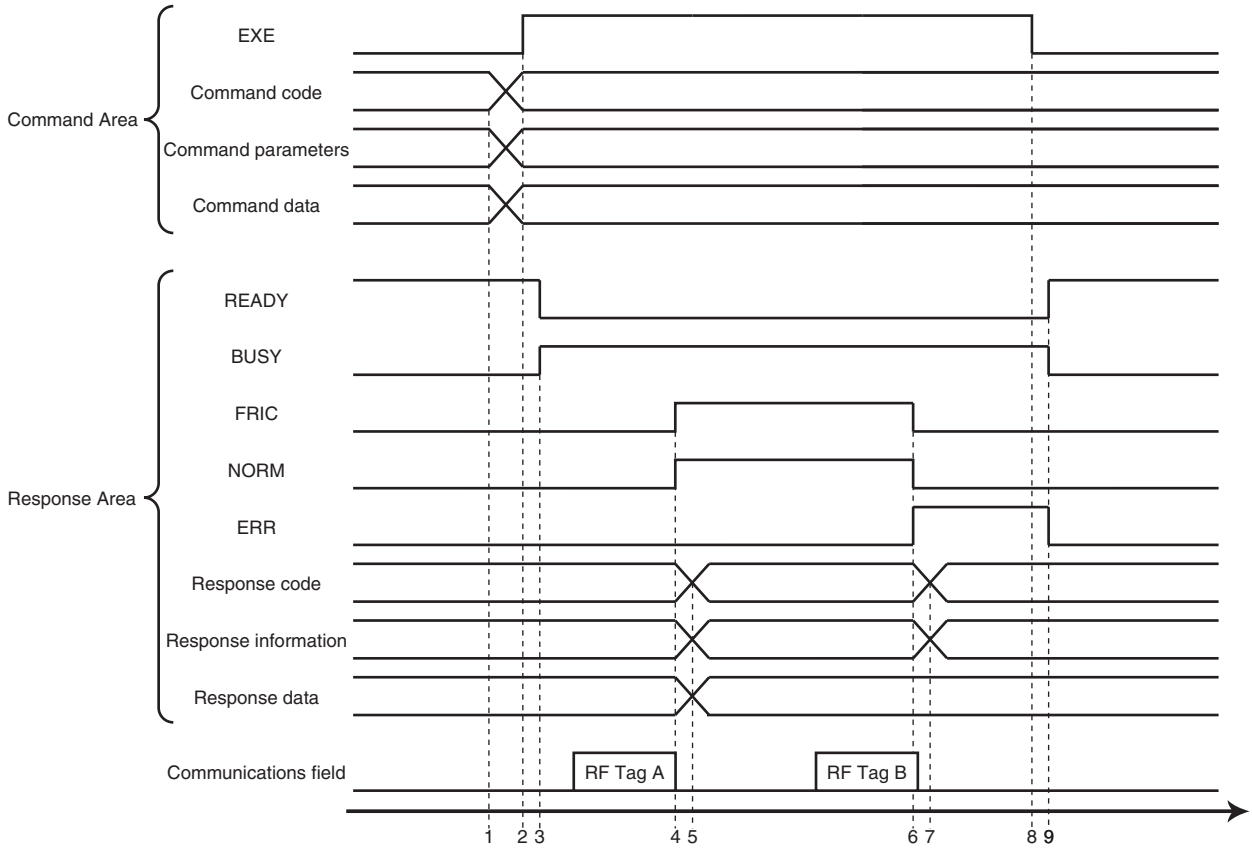

1. The command code, command parameters, and command data are set from the PLC while the READY signal is ON.
2. The user (PLC) turns ON the EXE signal. This tells the Reader/Writer to start execution.
3. When the Reader/Writer receives the instruction to start execution, it turns OFF the READY signal and turns ON the BUSY signal.
4. The Reader/Writer detects the first RF Tag (RF Tag A) and when communications end normally, it sets the response code, response information, and response data, toggles the FRIC signal (turns it ON), and turns ON the NORM signal.
5. The user (PLC) detects that the FRIC signal has changed and that the NORM signal has turned ON and reads the response data.
6. The Reader/Writer detects the second RF Tag (RF Tag B) and when communications end in an error, it sets the response code and response information, toggles the FRIC signal (turns it OFF), and turns ON the ERR signal.
7. The user (PLC) detects that the FRIC signal has changed and that the ERR signal has turned ON, reads the response code and response information, and checks the error.
8. If the BUSY signal is ON and the user (PLC) wants to cancel Repeat or FIFO Repeat communications, the user (PLC) turns OFF the EXE signal. This tells the Reader/Writer to stop execution.
9. When the Reader/Writer receives the instruction to stop execution, it turns ON the READY signal and turns OFF the BUSY, FRIC, NORM, and ERROR signals.

■ Executing Other Commands

▪ Executing Reader/Writer Setting, Reader/Writer Information Acquisition, or Reader/Writer Operation Control Commands

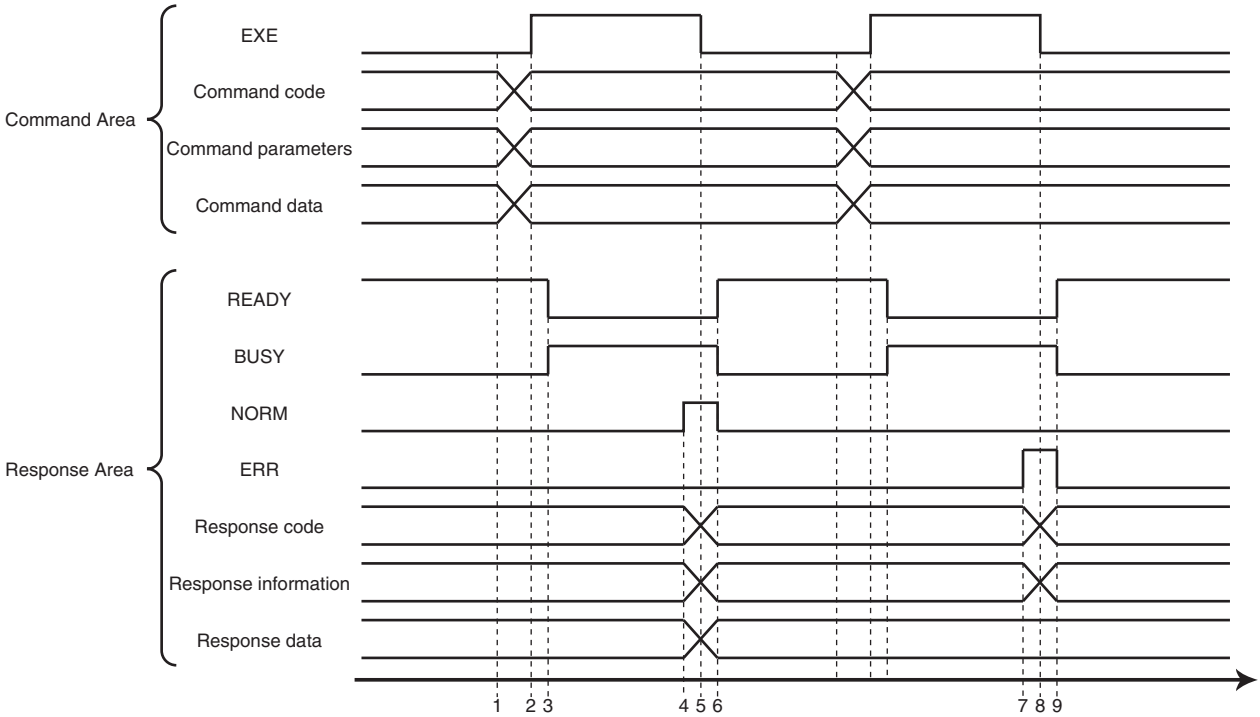

1. The command code, command parameters, and command data are set from the PLC while the READY signal is ON.
2. The user (PLC) turns ON the EXE signal. This tells the Reader/Writer to start execution.
3. When the Reader/Writer receives the instruction to start execution, it turns OFF the READY signal and turns ON the BUSY signal.
4. When communications end normally, the Reader/Writer sets the response code and response data and turns ON the NORM signal.
5. The user (PLC) detects that the NORM signal has turned ON and reads the response data. After reading the data, the user (PLC) turns OFF the EXE signal. This tells the Reader/Writer to stop execution.
6. When the Reader/Writer receives the instruction to stop execution, it turns ON the READY signal and turns OFF the BUSY signal and the ERR signal.
7. When communications end in an error, the Reader/Writer sets the response code and response information and turns ON the ERR signal.
8. The user (PLC) detects that the ERR signal has turned ON, reads the response code and response information. After reading the data, the user (PLC) turns OFF the EXE signal. This tells the Reader/Writer to stop execution.
9. When the Reader/Writer receives the instruction to stop execution, it turns ON the READY signal and turns OFF the BUSY signal and the ERR signal.

▪ Executing the RESET Command

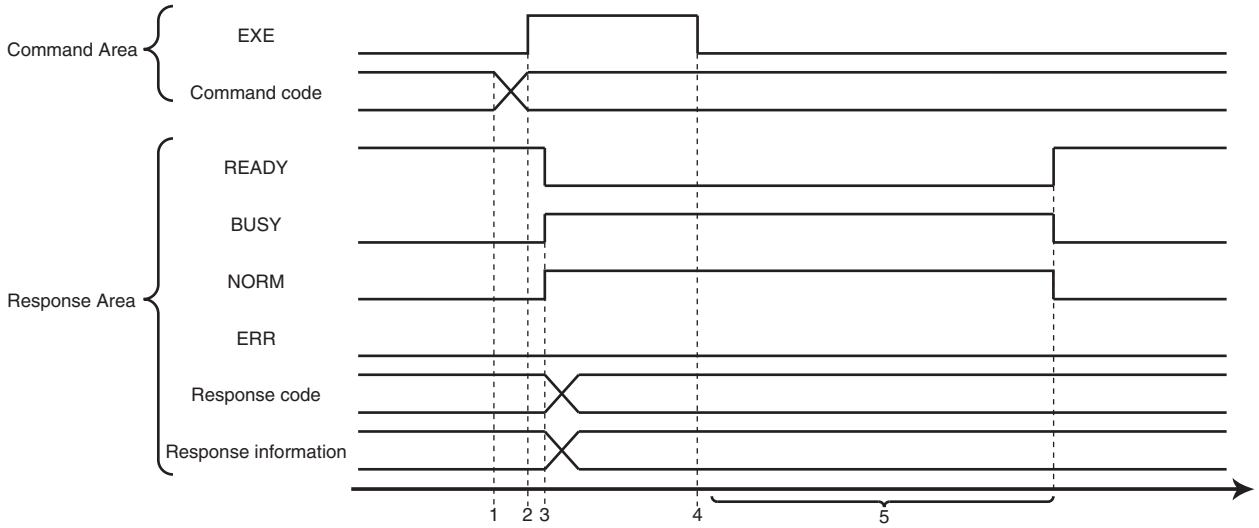

1. Set the command code of the RESET command in the PLC while the READY signal is ON.
2. The user (PLC) turns ON the EXE signal. This tells the Reader/Writer to start execution.
3. When the Reader/Writer receives the instruction to start execution, it turns OFF the READY signal and turns ON the BUSY signal. If the Reader/Writer can be reset, it sets the response code and turns ON the NORM signal.
4. When the PLC detects that the NORM signal is ON, it turns OFF the EXE signal. This tells the Reader/Writer to stop execution.
5. When the Reader/Writer receives the instruction to stop execution, it resets itself. After the Reader/Writer restarts and the cyclic data exchanges connections are established again, the Reader/Writer turns ON the READY signal and turns OFF the BUSY signal and NORM signal.

Section 8
Web Browser Interface

Web Browser Operation Window 186

Operation Interface 188

- Password Entry View 188
- Status View 189
- Network Settings View 190
- Communications Settings View 192
- SET MULTI-READER/WRITER OPERATION 193
- RF Tag Communications View 194
- Log View 195
- Noise Monitor View 196
- RF Analyzer 197
- Reboot 201
- Configuration 202
- Configuration File 207

Web Browser Operation Window

Connect the Ethernet cable and start a Web browser on the computer.
Enter the IP address of the Reader/Writer in the address field of the Web browser to display the Web browser operation window.
Enter http://192.168.1.200 if you are using the default IP address.
If a Web password is not set in the Reader/Writer, the Status View will be displayed first.
To display another view, click the specified menu button.

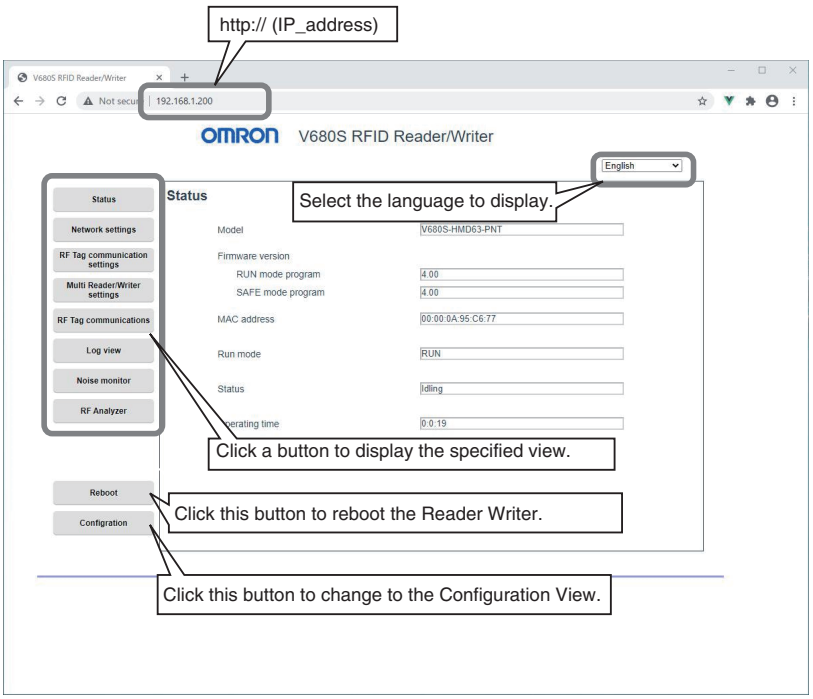

CHECK! If you want to use it in the conventional PC operating environment, please contact our sales staff.

CHECK! Do not connect multiple Web browsers to one reader / writer.
If you operate with multiple Web browsers at the same time, it may not be displayed correctly or you may not be able to perform the correct operation.

The Web browser interface can be used in the following operating environments.

- OS: Windows 8.1/Windows 10
- Web Browser: Internet Explorer 11
  Microsoft Edge
  Google Chrome

OS	Web Browser	Propriety of use
Windows XP	IE7 to IE8	Not available
Windows 7	IE8 to IE10	Not available
Windows 8.1	IE11	Available
Windows 10	IE11	Available
Windows 10	Edge	Available
Windows 10	Chrome	Available

No Java plug-in is required to use the Web browser interface.

CHECK! Depending on the combination of OS and Web browser, you may not be able to use the Web browser.
Please refer to the above figure and use the Web browser suitable for your OS.

* Windows is a registered trademark of Microsoft Corporation in the USA and other countries.
Screen shots are used with permission from Microsoft.

CHECK!

If the characters on the Web browser screen are difficult to see, use the zoom function provided by the Web browser.

CHECK!

The operating indicator (Green) may flash because the Web browser communicates with the Reader/Writer at fixed interval.

Operation Interface

Password Entry View

If a Web password is set in the Reader/Writer, the Password Entry View will be displayed first.

Item name	Description
Password	If a Web password is set in the Reader/Writer, enter the password.

CHECK!

If an error message appears after pressing the **OK** button, confirm the password.

CHECK!

If the Reader/Writer is running in Safe mode, the password entry screen does not appear even if you set the password.

Status View

Item name		Description
Device type		Displays the product model number.
Firmware version	Run mode program	Displays the Run Mode program versions. Displays only “Major version” and “Minor version”.
	Safe mode program	Displays the Safe Mode program versions. Displays only “Major version” and “Minor version”.
MAC address		Displays the MAC address from the Reader/Writer.
Operation mode		Displays the mode of the Reader/Writer. Run/Safe Mode
Status		Displays the status of the Reader/Writer. Idling/RF Tag communications in progress and Changing settings/Error
Operating time		Displays the time since the Reader/Writer was started. Example: 0:12:34

Network Settings View

■ TCP/IP Setting

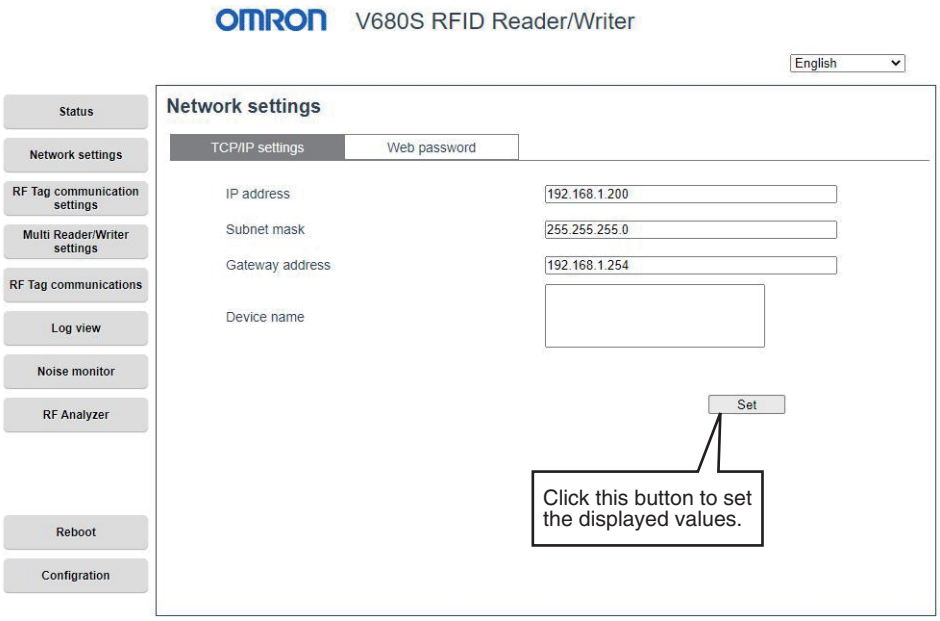

Item name	Description	Setting range	Default
IP address	IP address	---	192.168.1.200
Subnet mask	Subnet mask address	---	255.255.255.0
Gateway address	Gateway address	---	192.168.1.254
Device name	239 ASCII characters max.	According to the naming rules of the PROFINET standards.*1	None

*1 The naming rules for PROFINET devices are as follows:

- Devices name must consist of one or more labels. Labels are separated by periods.
- A period cannot be used as the first or last character in a name.
- Labels must consist of up to 63 of the following characters: a to z, 0 to 9, and -
- A dash (-) cannot be used as the first or last character in a label.
- The text string at the beginning of a name must not be “port-<n>” where n is 0 to 9.
- Text strings in the format of IP addresses cannot be used for names. (Example: 192.168.1.200)

CHECK! If you change the network settings, restart the Reader/Writer. The new settings will be effective after a restart of the Reader/Writer.

CHECK! When you restart the Reader/Writer after you change the IP address, Web browser can not reconnect to the Reader/Writer. If you re-specified the new IP address in the address field of the Web browser, the screen will be appeared.

CHECK! The error message is displayed if you change the configuration during the Reader/Writer is executing RF tag communication or Noise measurement.

■ Web Password

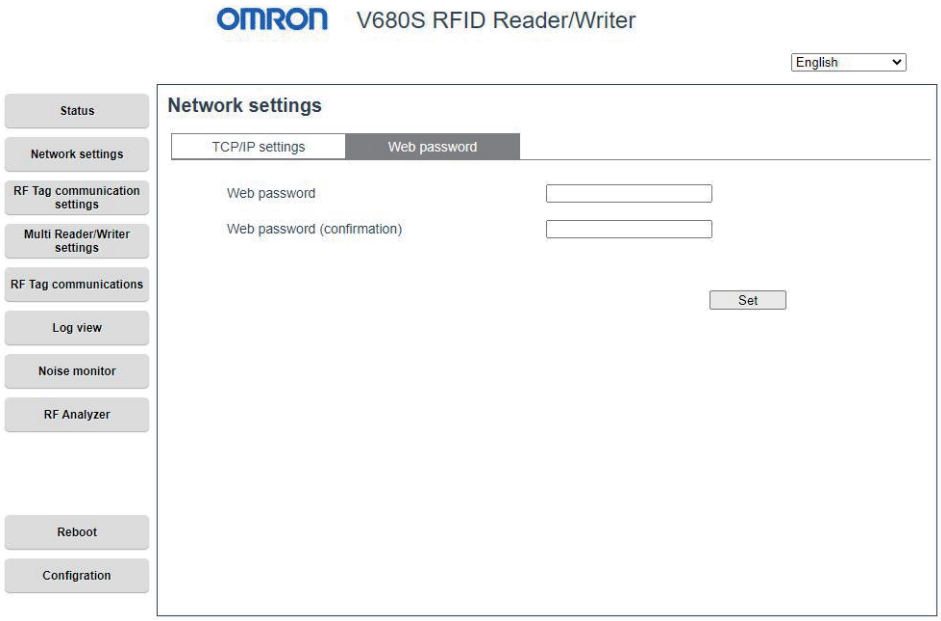

Item name	Description	Setting range	Default
Web password	15 ASCII characters max.	15 ASCII characters max.	None
Web password (confirmation)	15 ASCII characters max.	15 ASCII characters max.	None

Communications Settings View

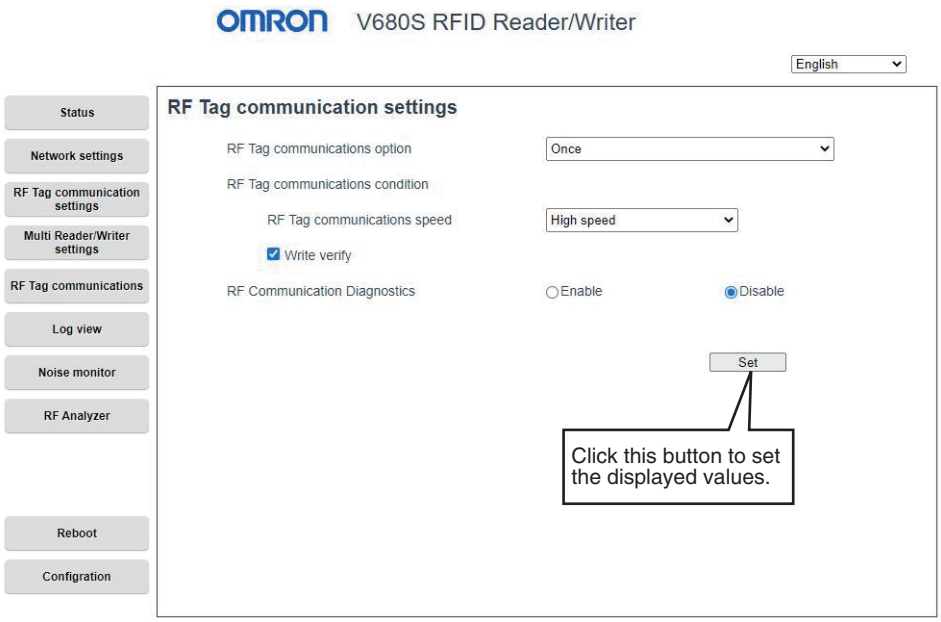

Item name	Description	Setting range	Default
RF Tag Communications option	Select the RF Tag communications option.	Once, Auto, Repeat, FIFO Repeat (Without ID code check) or FIFO Repeat (With ID code check)	Once
RF Tag Communications Speed	Specify the speed of communications with the RF Tags.	High speed or Normal speed	High speed
Write Verify	Select this check box to enable write verification.	Enabled/disabled	Enabled
Use diagnostics	Select to enabled or disabled.	Enabled/disabled	Enabled

Refer to *Communications Options* in *Section 6 Functions* for information of RF Tag Communications option.

p.93

Refer to *Setting Communications Conditions* in *Section 6 Functions* for information of RF Tag Communications option.

p.103

CHECK!

The settings are immediately reflected when you click the “Set” button.

Refer to *RFID System Maintenance* in *Section 6 Functions* f for communication diagnostic.

p.108

CHECK!

The error message is displayed if you change the configuration during the Reader/Writer is executing RF tag communication or Noise measurement.

SET MULTI-READER/WRITER OPERATION

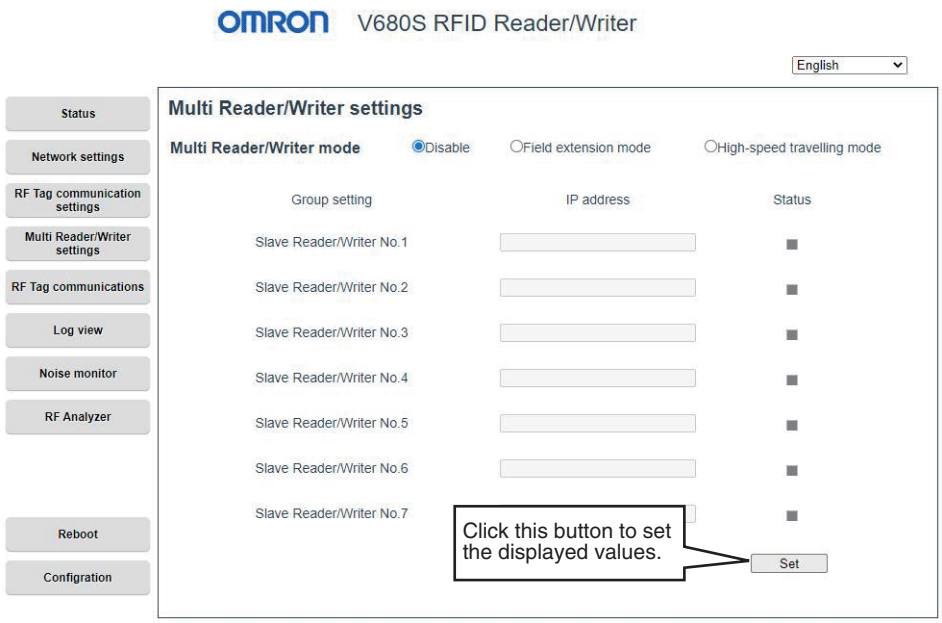

Item name		Description	Setting range	Default setting
Multi Reader/Writer mode		Sets the Multi-Reader/Writer Mode.	Disable, Field extension mode, or High-speed traveling mode	Disable
Group setting		You can check the IP address of Reader/Writers registered as Slave Reader/Writers and the connection status of all of the Slave Reader/ Writers.	-	-
	IP address	You can set or check the IP addresses of Slave Reader/Writers No. 1 to 7.	-	-
	Status	You can check the connection status of Slave Reader/Writers No. 1 to 7 with the displayed colors.	Not registered: Gray Connection failed: Red Connection successful: Green	-

CHECK! If you change any of the multi-Reader/Writer settings, restart the Reader/Writer. The new settings will be enabled after the Reader/Writer is restarted.

CHECK! You can register IP addresses for up to seven Slave Reader/Writers on this view. If you set the Multi-Reader/Writer Mode to anything other than Disable and set the IP address for a Slave Reader/Writer, the Slave Reader/Writer will become a Master Reader/Writer.

CHECK! There can be only one Master Reader/Writer in any one group.

CHECK! If you assign the IP addresses of the Reader/Writer from the IO controller, the IP addresses of the slave Reader/Writer will change dynamically and may result in unexpected operation. Confirm that no problems will occur before you assign the IP addresses from the IO controller.

RF Tag Communications View

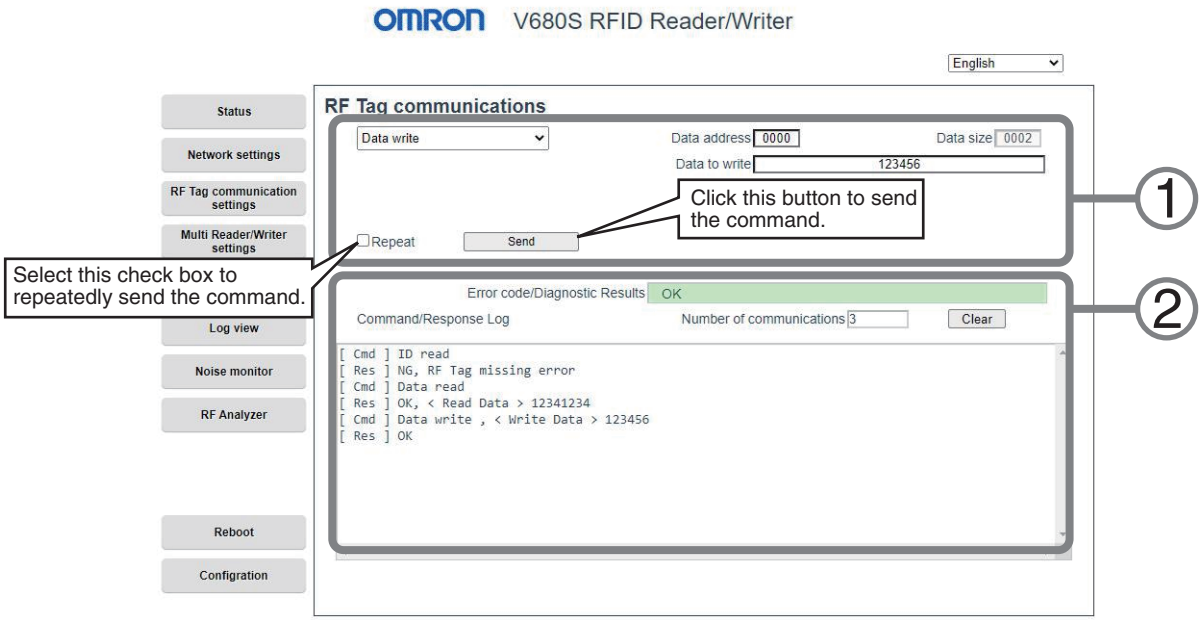

1. Command Area

Item name	Description	Setting range
Command select	Select the command to send.	ID READ / DATA READ / DATA WRITE
Data address	Specify in 4-digit hexadecimal the first address to read or write from the RF Tag.	0000 to 0999 hex
Data size	Specify in 4-digit hexadecimal the number of words of data to read from the RF Tag.	0001 to 007D hex
Write data	Specify the data to write to RF Tag.	1 to 113 words
Repeat	Select this check box to repeatedly and consecutively send the command. Clear the selection of this check box if the RF Tag communications option of the Reader/Writer is set to Auto, Repeat or FIFO Repeat. If a command is sent repeatedly and consecutively with the Auto, Repeat or FIFO Repeat option, an error dialog will occur.	

2. Response Area

Item name	Description
Error code/Diagnostics results	The background will be green when the response returned by the Reader/Writer indicates a normal end. If the response indicates an error end, the background will be red and the error code will be displayed. If communications diagnostics are enabled and communications with the RF Tag are determined to be unstable, the background will be yellow and the diagnostics result is displayed.
Number of communications	The total number of commands that have been sent to the Reader/Writer is displayed.
Command/Response Log	Displays the sent command and write data, read data and the result. [Cmd] : The send command is displayed. If the command is a data write, it is followed by <Write Data>. [Res] : Result of the response is displayed. If the response result is NG, the error details will be displayed. If the ID read and data read are successful, <Read Data> follows the response result. <Write Data> : The data to be written to the tag is displayed. <Read Data> : The read data of the tag is displayed.
Clear	This button clears the number of sent commands and command/response log.

Refer to *RFID System Maintenance* in *Section 6 Functions* for details on communications diagnostics.

p.108

CHECK! If RF Tag communications are attempted when the Reader/Writer is performing RF Tag communications, noise measurement, or other processing, an error will occur. Perform operations when the Reader/Writer is not busy with another operation.

Log View

■ Command error log

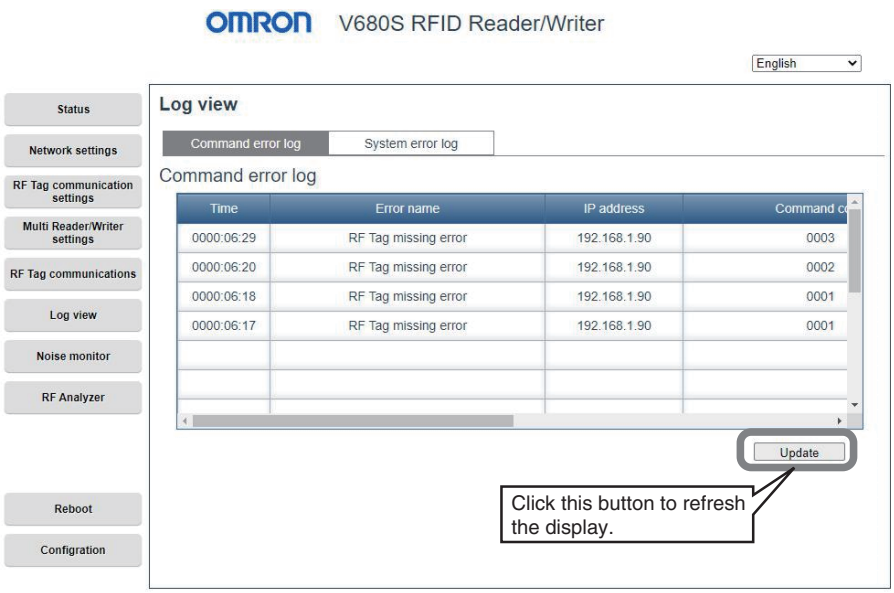

Item name	Description
Command error log	Displays the following command error log information. Operating time, error name, IP address, command code, error code, response information 1, and response information 2

Refer to *Command Error Log* in *Section 6 Functions* for details on the command error log.
p.106

■ System error log

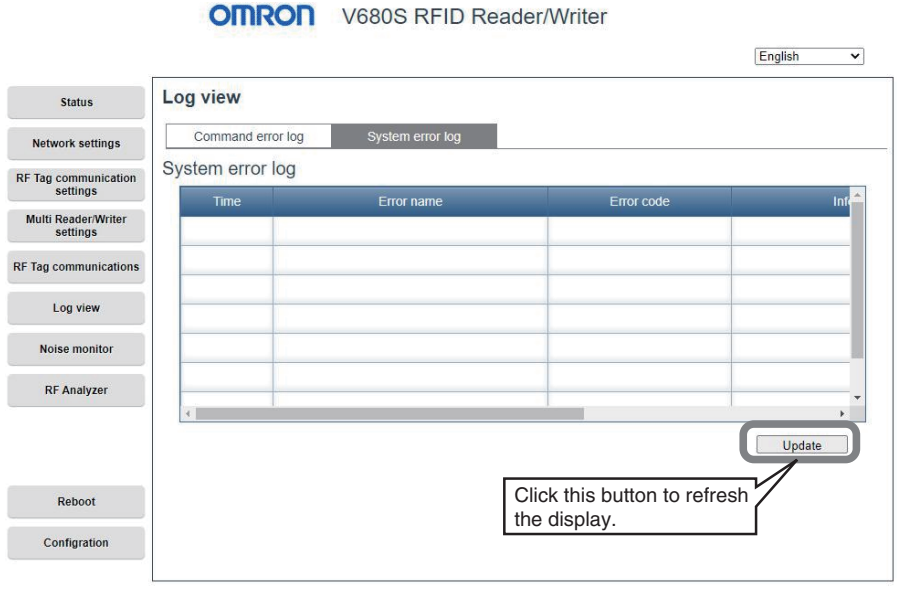

Item name	Description
System error log	Displays the following information from the system error log: Operating time, error name, error code, attached information 1, and attached information 2

Refer to *System Error Log* in *Section 6 Functions* for details on the system error log.
p.106

Noise Monitor View

You can check the graphed noise level (one second intervals) around the Reader/Writer.
Select from the screen, the type of the RF tag you want to use, because the communication performance will be changed by the combination of the type of the RF tag to be used.
The “Normal area”, “Precaution area” and “Warning area” will be appeared on the screen according to the type of the RF tag to be used.

Normal area	Means the noise level that communications range can be reduced to about less than 20%
Precaution area	Means the noise level that communications range can be reduced to about 20% to 50%.
Warning area	Means the noise level that communications range can be reduced to about 50% or more.

CHECK! When the Reader/Writer is running in safe mode, this screen can not be operated. Run the Reader/Writer in RUN mode.

About the relationship between the Reader/Writer communication performance and the noise level, refer to *Noise Measurement* in *Section 6 Functions*.

p.101

CHECK! Because there is variation in the result of the noise measurement, consider the result as a guideline.

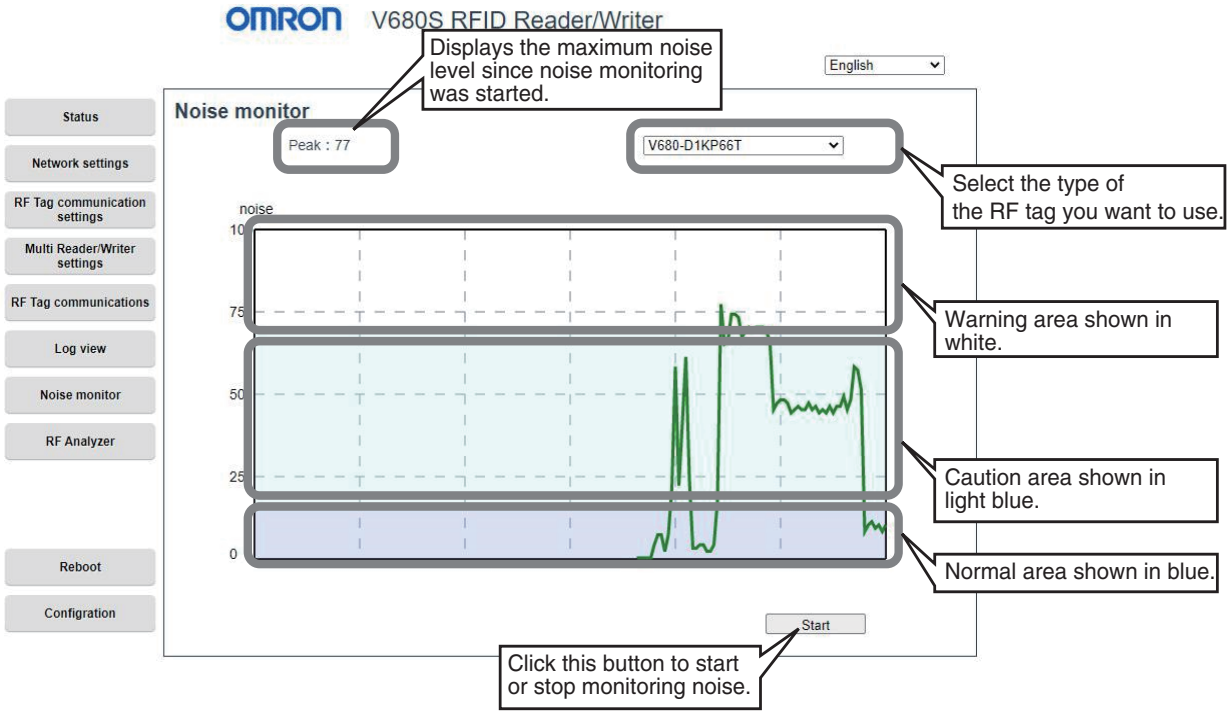

Item name	Description
Noise monitor	The display is updated every second. The maximum, average, and minimum noise levels since noise monitoring was started are displayed.

CHECK! The error message is displayed if you change the configuration during the Reader/Writer is executing RF tag communication or Noise measurement.

RF Analyzer

You can use the RF Analyzer to check the diagnostic information from communication diagnostic. You can easily see whether communications are stable, unstable (warning), or in error when communication diagnostic is used.
If communications are unstable (warning), you can display assumed causes and display guidance that provides detailed cause confirmation and corrections.
If an error occurs, the error name and corrections are displayed.

CHECK! When the Reader/Writer is running in safe mode, this screen can not be operated. Run the Reader/Writer in RUN mode.

CHECK! The diagnostic log is not displayed while communication diagnostic is disabled.
Enable communication diagnostic on the Communications Setting View.

CHECK! If the number of records in the diagnostic log exceeds 2,048, the oldest records are overwritten.

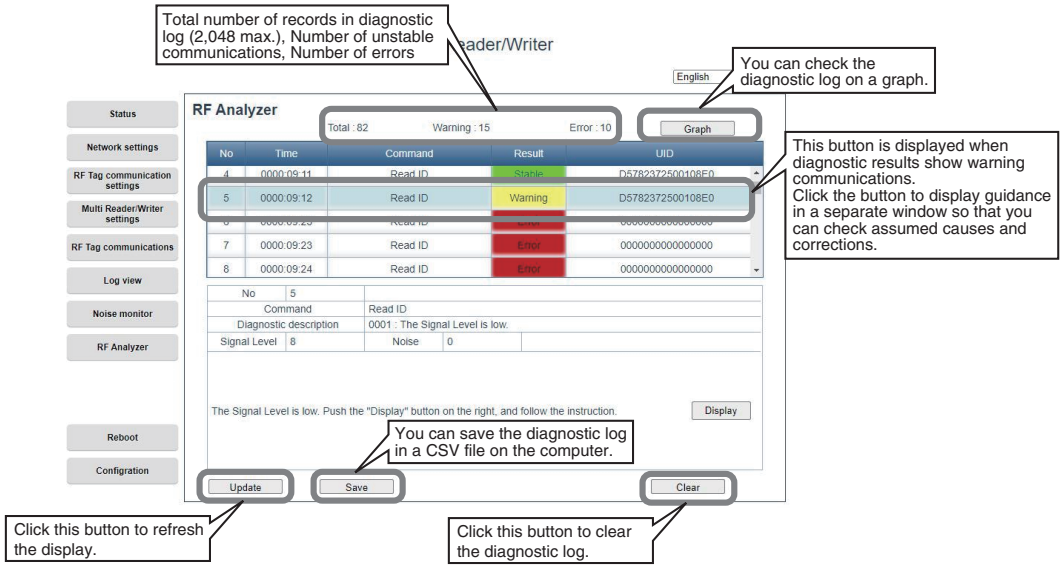

Item name	Description
No.	Numbers are assigned from 1 to 2,048. The larger the number, the more recent the information.
Time	The Reader/Writer operating time when the diagnostic information was registered.
Command	The command that was executed when the diagnostics information was registered.
Result	One of the following: Stable, Unstable (warning), or Error
UID	Displays the UID of the RF Tags that were detected in communications diagnostics.
Diagnostic description	Displays the details of the communication diagnosis history. No. : Numbers are assigned from 1 to 2,048. The larger the number, the more recent the information. Command : The command type that was executed when the diagnostic information was registered. Diagnostic description : The error code and assumed cause are displayed. Signal Level : Displays the signal level when communicating with the RF tag. Noise : Displays the noise level around the reader / writer during communication with the RF tag. Assumed cause/Correction: The assumed cause and corrections are displayed for unstable (warning) communications and communications errors. A button is displayed for unstable communications.Click the button and follow the displayed guidance to display assumed causes and corrections.

■ Guidance display

Click the **Display** Button in the *Details* column on the RF Analyzer View to display guidance. Respond yes or no to the questions to display advice on the assumed causes and corrections.

If you follow the advice to make corrections, you can increase the communications leeway and achieve more stable RFID System operation.

■ RF Analyzer Graphs

You can display time-based graphs of diagnostic log information.

This allows you to visually understand the data from communication diagnostic and quantitatively confirm the degree of leeway in communications.

Two parameters are displayed for the graph.

1. Signal Level

To communicate with RF Tags, the Signal levels of the Reader/Writer and RF Tags must be sufficiently high. You can display the Signal levels in 10 levels from 0 to 10 on a bar graph. The higher the value, the more leeway there is in communications. If there is sufficient communications leeway, the level is 10. If a communication fails (i.e., if an error occurs), the level will be 0 and no bar will be displayed. A value of 1 to 9 means that the communications leeway is low (i.e., that communications are unstable), and the bar will be displayed in yellow. In this case, we recommend that you follow the guidance described above and adjust the installation conditions to increase the communications leeway as close as possible to a level of 10.

2. Noise Level

The ambient noise level around the Reader/Writer during communications with the RF Tag is displayed in red on a broken-line graph. The lower the noise level, the better the conditions. A noise level of 5 or higher means that the communications leeway is low (i.e., that communications are unstable), and the bar will be displayed in yellow.

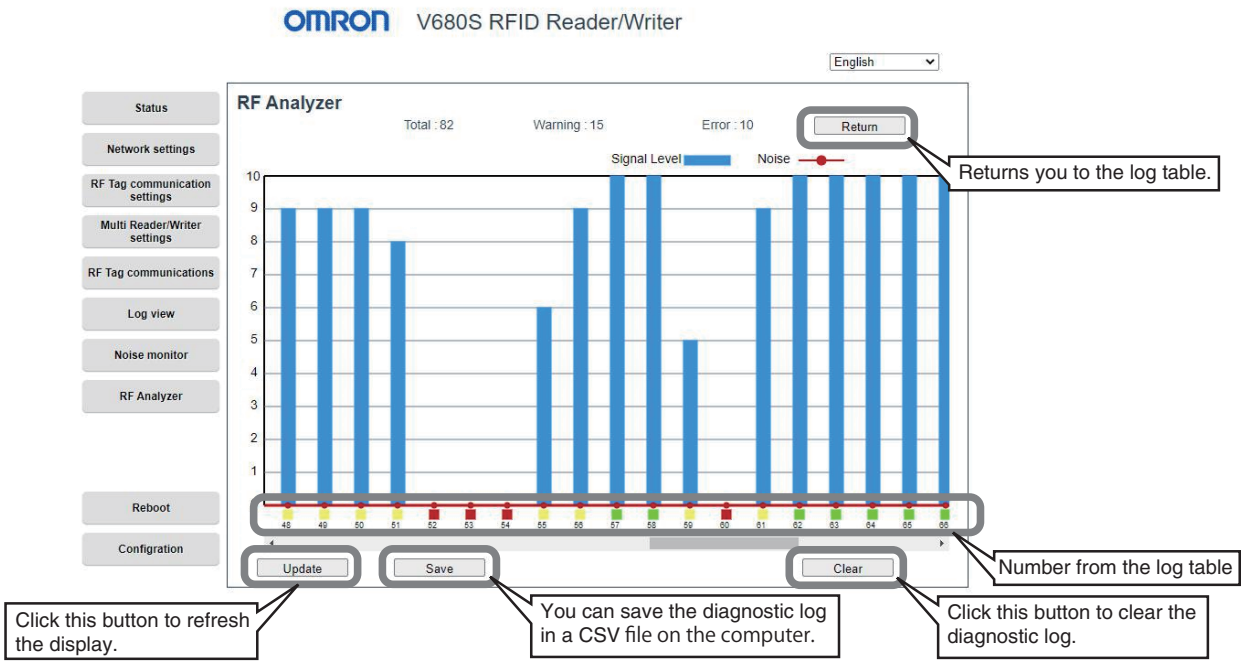

■ RF Analyzer Diagnostic Log File

You can click the **Export** Button on the RF Analyzer View to download the diagnostic log stored in the Reader/Writer to a computer and save it as a CSV file. The following information is included in the diagnostic log file. You can use it to check more detailed information than you can on the Web browser displays.

Item name	Description
No	Numbers are assigned from 1 to 2,048. The larger the number, the more recent the information.
Time Stamp	The Reader/Writer operating time when the diagnostic information was registered.
Command	The command type that was executed when the diagnostic information was registered.
Response Result	The communications result is displayed. “Warning” is displayed if the communications diagnostic result shows an unstable communication. • Normal: Normal • Warning: Unstable • Other: Error type name
Diagnostic Result	The communications diagnostic result is displayed. • Good: Stable • Output level low: Low send power • Receiving level low: Low receive power • Noise level high: Excessive ambient noise level • Signal-Noise ratio low: Low signal-to-noise ratio • N/A: Communications error
Output Level	The send power level to the RF Tag is given between 0 and 10. The higher the value, the better the conditions. (If the level is 9 or lower, the Reader/Writer will determine that the communication was warning.)
Receiving Level	The receive power level from the RF Tag to the Reader/Writer is given between 0 and 10. The higher the value, the better the conditions. (If the level is 9 or lower, the Reader/Writer will determine that the communication was warning.)
Noise Level	The ambient noise level around the Reader/Writer is given between 0 and 10. The lower the value, the better the conditions. (If the level is 5 or higher, the Reader/Writer will determine that the communication was warning.)
Signal Level	The overall level combining Output Level and Receiving Level is given between 0 and 10. The higher the value, the better the conditions.
Tag ID	The Tag ID of the RF Tag for which communication diagnostic was performed is given.

Reboot

If you click the **Reboot** Button on any of the operation views, a Confirm Reboot Dialog Box is displayed.

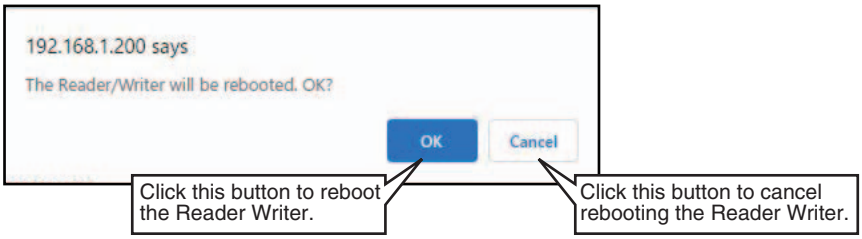

The following dialog box is displayed after the Reader/Writer has finished rebooting.
Click the **OK** Button to connect to the Reader/Writer.

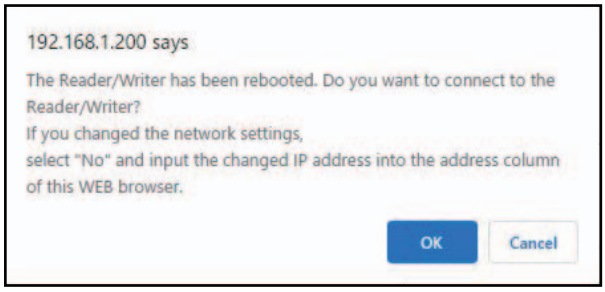

The following dialog box is displayed after reconnecting to the Reader/Writer. Click the **OK** Button.

CHECK! When re-connection goes wrong and an error message is displayed, Check the connection with the Reader/Writer and reboot a Web browser.

CHECK! After re-connection, displays the “Status” window.

Configuration

You can save a configuration file (INI file) that contains the configuration information from the Reader/Writer in the computer. You can also send a configuration file to the Reader/Writer to change all of the configuration information in the Reader/Writer. Or, you can click the **Default** Button to return all of the configuration information in the Reader/Writer to the default settings.
To display the Configuration View, click the **Configuration** Button at the bottom of the Web browser operation window.

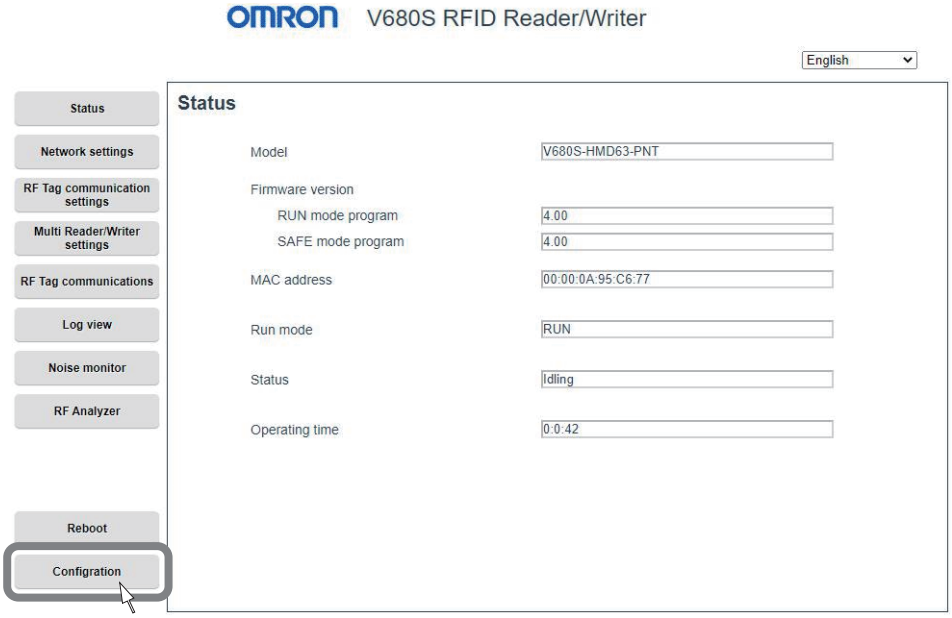

Click the **Configuration** Button at the bottom of the Web browser operation window to display the Configuration View.

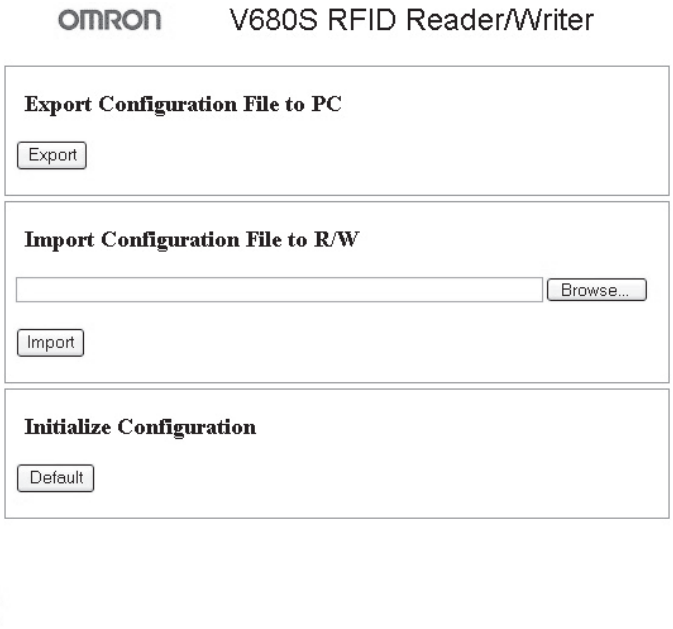

Item name	Description
Export Configuration File to PC	Saves a configuration file that contains the Reader/Writer settings on the computer.
Import Configuration File to R/W	Updates the settings in the Reader/Writer with the settings in a configuration file that you select on the computer.
Initialize Configuration	Returns all of the settings in the Reader/Writer to the default settings.

■ Saving a Configuration File on the Computer

You can click the **Export** Button in the *Export Configuration File to PC* Area to save a configuration file (file name: conf.ini) that contains the configuration information from the Reader/Writer on the computer. The configuration file uses a normal INI file format.

Click the **Export** Button. The following dialog box will be displayed. Click the **Save** Button.

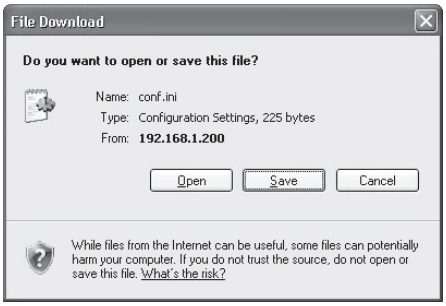

Specify where to save the file and click the **Save** Button. The configuration information from the Reader/Writer will be saved in the configuration file.

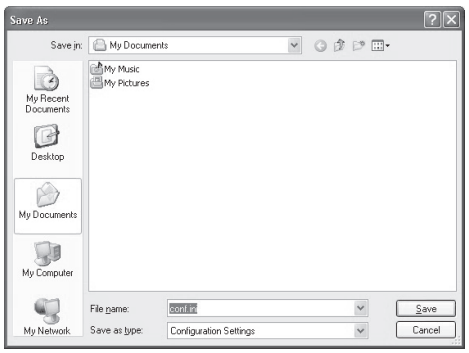

Example of a Configuration File

```
[NetworkSetting]
IPAddress=192.168.1.200
SubnetMask=255.255.255.0
GatewayAddress=192.168.1.254
DeviceName=
WebPassword=
WebPortNo=7090
[RFTagCommunicationSetting]
CommunicationSpeed=0
WriteVerify=1
CommunicationOption=0
CommunicationDiagnostics=0
[MultiReaderWriterSetting]
MultiReaderWriterMode=0
SlaveNum=0
SlaveNo1IPAddress=0.0.0.0
SlaveNo2IPAddress=0.0.0.0
SlaveNo3IPAddress=0.0.0.0
SlaveNo4IPAddress=0.0.0.0
SlaveNo5IPAddress=0.0.0.0
SlaveNo6IPAddress=0.0.0.0
SlaveNo7IPAddress=0.0.0.0
```

■ Sending a Configuration File to the Reader/Writer

You can change all of the configuration information in the Reader/Writer with the following procedure: Click the **Browse** Button in the *Import Configuration File to R/W* Area, select the configuration file to use to set up the Reader/Writer, and then click the **Import** Button.

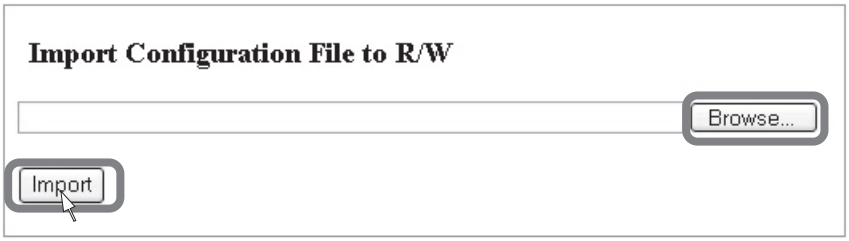

Click the **Browse** Button. A dialog box to select the configuration file will be displayed. Select the configuration file and then click the **Open** Button.

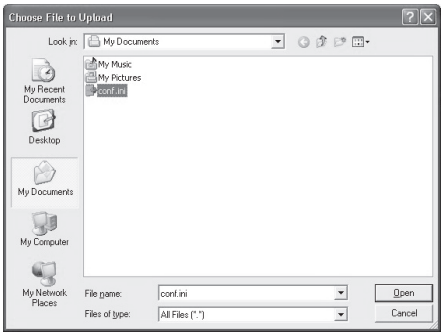

Click the **Import** Button. All of the configuration information in the Reader/Writer will be changed.

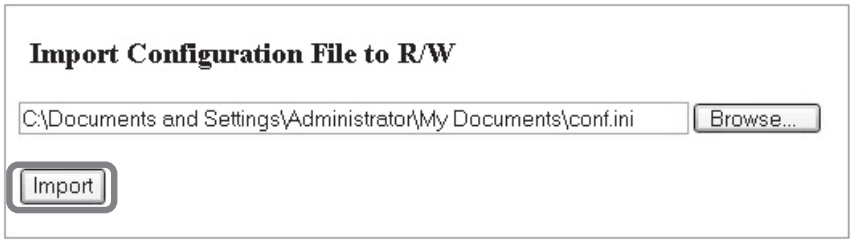

The following information is displayed after setting is completed.

OMRON V680S RFID Reader/Writer

V680S - Change Configuration

[NetworkSetting]		
IPAddress =	192.168.1.200	**Check OK**
SubnetMask =	255.255.255.0	**Check OK**
GatewayAddress =	192.168.1.254	**Check OK**
DeviceName =		**Check OK**
WebPassword =		**Check OK**
WebPortNo =	7090	**Check OK**
[RFTagCommunicationSetting]		
CommunicationSpeed =	0	**Check OK**
WriteVerify =	1	**Check OK**
CommunicationOption =	0	**Check OK**
CommunicationDiagnostics =	0	**Check OK**
[MultiReaderWriterSetting]		
MultiReaderWriterMode =	0	**Check OK**
SlaveNum =	0	**Check OK**
SlaveNo1IPAddress =	0.0.0.0	**Check OK**
SlaveNo2IPAddress =	0.0.0.0	**Check OK**
SlaveNo3IPAddress =	0.0.0.0	**Check OK**
SlaveNo4IPAddress =	0.0.0.0	**Check OK**
SlaveNo5IPAddress =	0.0.0.0	**Check OK**
SlaveNo6IPAddress =	0.0.0.0	**Check OK**
SlaveNo7IPAddress =	0.0.0.0	**Check OK**

Configuration-Update Completed !!

■ Initializing the Settings

Click the **Default** Button in the *Initialize Configuration* Area to return all of the settings in the Reader/Writer to the default settings. After you initialize the settings, cycle the power supply to the Reader/Writer to enable the new settings.

Click the **Default** Button in the *Initialize Configuration* Area. The following dialog box will be displayed. Click the **OK** Button.

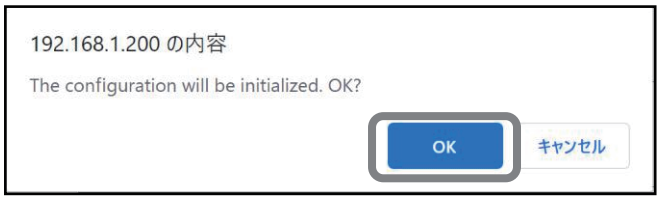

The following information is displayed after setting is completed. The network settings (NetworkSetting) are applied when the Reader/Writer is restarted. The RF Tag communications settings (RFTagCommunicationSetting) are applied immediately.

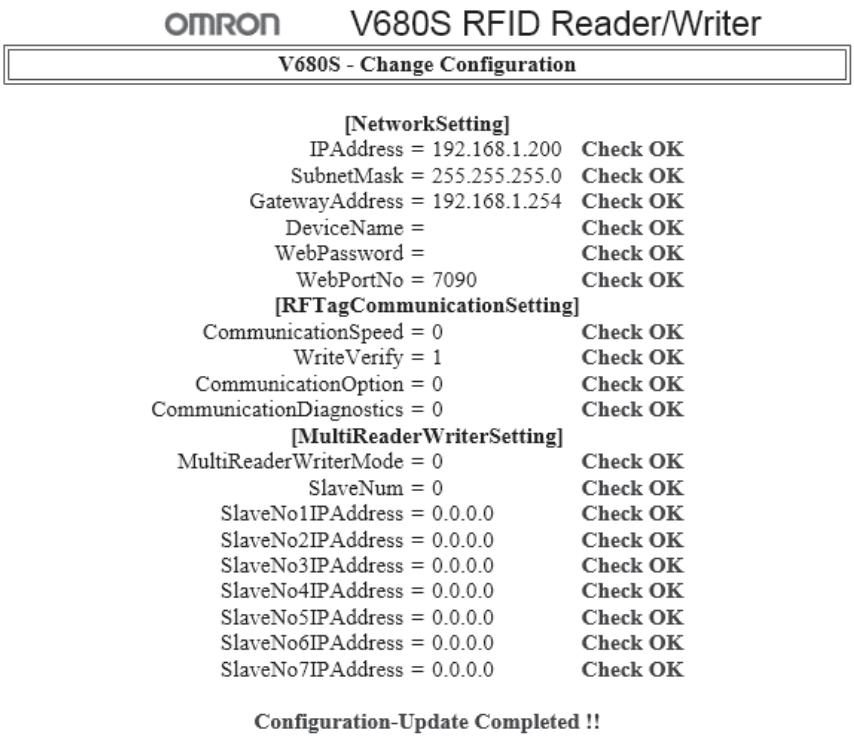

Configuration File

This section describes the format of the configuration file. The configuration file uses a normal INI file format.

- Any line that starts with a semicolon (;) is treated as a comment.
- Any line that starts with an opening bracket ([) is treated as a section declaration row. The row must also end in a closing bracket (]).
- Any row that does not start with either of the above two characters is an entry row.

■ Section and Entry Table

Section name	Entry name	Description	Default
NetworkSetting	IPAddress	Gives the setting of the IP address of the Reader/Writer. Specify four decimal numbers separated by periods.	192.168.1.200
	SubnetMask	Gives the setting of the subnet mask of the Reader/Writer. Specify four decimal numbers separated by periods.	255.255.255.0
	GatewayAddress	Gives the setting of the default gateway of the Reader/Writer. Specify four decimal numbers separated by periods.	192.168.1.254
	DeviceName	Gives the name of the Reader/Writer. Specify up to 63 ASCII characters.	
	WebPassword	Gives the login password for the Web browser interface. Specify up to 15 ASCII characters. Specify “” (blank) for no password.	
	WebPortNo	Gives the Ethernet communications port number for the Web browser interface. Specify 1024 to 65535 decimal.	7090
RFTagCommunicationSetting	CommunicationSpeed	Gives the communications speed between the Reader/Writer and RF Tags. Set a decimal number. 0: High speed 1: Normal speed	0
	WriteVerify	Gives the setting for write verification for write communications. Set a decimal number. 0: No verification 1: Verification	1
	CommunicationOption	Gives the setting of the RF Tag communications option. Set a decimal number. 0: Once 1: Repeat 2: FIFO Repeat (Without ID code check) 3: Auto 18: FIFO Repeat (With ID code check)	0

Section name	Entry name	Description	Default
MultiReaderWriterSetting	MultiReaderWriterMode	Gives the Reader/Writer Extended Mode settings. Specify a decimal value. 0: Disabled 1: Field Extension Mode 2: High-speed Traveling Mode	0
	SlaveNum	Gives the number of slaves in Field Extension Mode. Set a value between 0 and 7.	0
	SlaveNo1IPAddress	Give the IP Addresses in Reader/Writer Extended Mode. Specify four decimal numbers separated by periods.	0.0.0.0

	SlaveNo7IPAddress		

Section 9
Troubleshooting

Error Descriptions	210
Fatal Errors	210
Nonfatal Errors	211
Errors and Indicator Status	212
Fatal Errors	212
Nonfatal Errors	214
Cyclic Data Exchanges Error	214
Errors and Countermeasures	215
Reader/Writer Operation Errors	215
IP Address Duplication Error	216
System Errors	216
V680S Command Errors	218
RF Tag Communications Errors	219
Troubleshooting Flowcharts	220
Main Check Flowchart	220
System Connections Check Flowchart	221
Operating Conditions and External Environment Check Flowchart	222
Host Device Communications Check Flowchart	223
RF Tag Communications Check Flow	224
About The Ethernet Communication Abnormality	225
When the Web browser screen is not displayed or the screen layout is strange	226
Google Chrome	226
Internet explorer11	228
Microsoft Edge	229
Safe Mode	231
Starting in Safe Mode	231

Error Descriptions

Information on up to eight errors that occur are recorded until the power supply to the Reader/Writer is turned OFF. You can access this information from the host device or the Web server.

Fatal Errors

■ Reader/Writer Operation Errors

The NORM/ERR indicator in the operation indicators flashes red if the control signal is not stable or if an error occurs in user configuration memory. If the Reader/Writer detects a user configuration memory error during startup, it will start in Safe Mode and the RUN indicator will flash green.
Check the connection of the control signal or correct the user settings, and then cycle the power supply to the Reader/Writer to return to normal operation.

■ System Errors

The NORM/ERR indicator in the operation indicators lights red if there is a CPU error, system memory error, or hardware fault. If the Reader/Writer detects a system memory error during startup, it will start in Safe Mode and the RUN indicator will flash green.

■ IP Address Duplication Error

If an IP address duplication error is detected at startup, the NORM/ERR indicator in the operation indicators flashes red irregularly. Turn OFF the power supply to the Reader/Writer, remove the Reader/Writer from the network, correct the IP addresses, add the Reader/Writer to the network, and turn the power supply back ON.

Nonfatal Errors

The NORM/ERR indicator in the operation indicators flashes red once if an error occurs in communications between the Reader/Writer and host device or in communications with an RF Tag.

V680S-HMD63-PNT

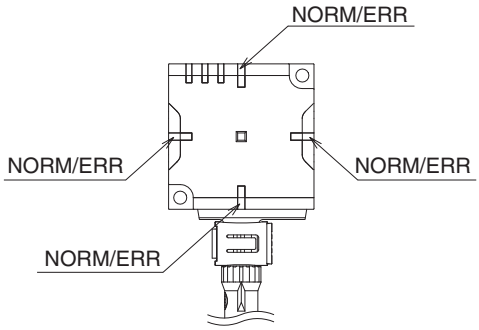

V680S-HMD64-PNT

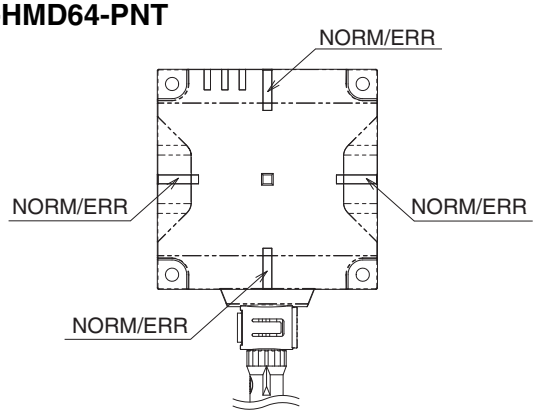

V680S-HMD66-PNT

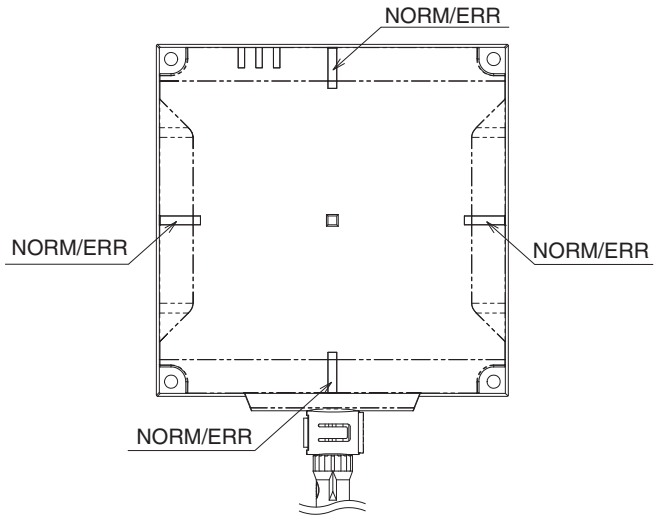

Errors and Indicator Status

Fatal Errors

■ Reader/Writer Operation Errors

▪ User Configuration Memory Error

RUN	NORM/ERR	Processing when error occurs
		There is an error in user configuration memory. • Initialize the settings to restore normal operation. Refer to *User Configuration Memory Error* in this Section for information for Initialize the setting. *p.215*
Lit green or fast flashing green	Flashing red	

▪ Unstable Control Signal or User Configuration Memory (Host Device Communications Conditions Settings) Error

RUN	NORM/ERR	Processing when error occurs
		The value of the control signal is not stable. • See if the control signal line in the V680S Cable is connected correctly to 24 VDC. See if there is a source of strong noise near the Reader/Writer or Cable.
Flashing green	Flashing red	There is an error in user configuration memory (host device communications conditions settings). • Initialize the settings to restore normal operation. Refer to *User Configuration Memory Error* in this Section for information for Initialize the setting. *p.215* * The Reader/Writer automatically starts in Safe Mode when it detects an error.

▪ Multi-Reader/Writer Execution Error

RUN	NORM/ERR	Processing when error occurs
		The multi-Reader/Writer functions cannot be executed. • Check the combination of the RF Tag communications option setting and multi-Reader/Writer function operating mode in the Master Reader/Writer. • Correct the IP address settings so that the Slave Reader/Writer does not use the same IP address as the Master Reader/Writer. For details, refer *Section 6 Multi-Reader/Writer Operation*. *p.113*
Flashing green or fast flashing green	Lit red	

■ IP Address Duplication Error (Indicator Flashes Red Irregularly)

RUN	NORM/ERR	Processing when error occurs
		Devices with the same IP address were detected during Reader/Writer startup. • Correct the IP address settings of the Reader/Writers.
Fast flashing green	Flashing red irregularly	

■ System Errors

▪ CPU Error or Hardware Fault

RUN	NORM/ERR	Processing when error occurs
		Take the appropriate action referring *System Errors* in this Section Replace the Reader/Writer if the condition does not change. *p.216*
Lit green or fast flashing green	Lit red	

▪ System Memory Error

RUN	NORM/ERR	Processing when error occurs
		Take the appropriate action referring *System Errors* in this Section Replace the Reader/Writer if the condition does not change. *p.216* * If the Reader/Writer detects a fault, the Reader/Writer will start in the " Safe mode" automatically.
Flashing green	Lit red	

Nonfatal Errors

The NORM/ERR indicator flashes once if an error occurs in communications between the Reader/Writer and host device or in communications with an RF Tag.

RUN	NORM/ERR
	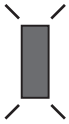
Lit green or fast flashing green	Flashes red once

Cyclic Data Exchanges Error

RUN	NORM/ERR
Lit green	Flashing yellow

If you use more than one Reader/Writer for multi-Reader/Writer operation, the ERROR indicator will light red once on any Reader/Writer for which an error is detected during communications with an RF Tag. The NORM indicator will light green once on any Reader/Writer that completes communications with an RF Tag normally. When the Master Reader/Writer returns a response to the host device, the NORM or ERROR indicator will light depending on whether the results given in the response is for a normal or error completion.

Errors and Countermeasures

Reader/Writer Operation Errors

■ User Configuration Memory Error

Initialize the settings to restore normal operation. There are the following two ways to initialize the Reader/Writer.

▪ Initializing with a Command Message from the Host Device

You can send the INITIALIZE SETTINGS command to the Reader/Writer to return the settings to the default values.

▪ Initializing through the Web Server

You can connect a computer to the network, start a Web browser, and return the settings to the default values from the Web browser window.

Refer to *Initializing the Settings* in *Configuration* in *Section 8 Web Browser Interface* for the procedure to Initializing through the Web Server.

p.206

■ Unfixed Operation Mode Error or User Configuration Memory (Host Device Communications Conditions Settings) Error

Identify the error on the Error Log View in the Web browser and restore operation with the countermeasure.

Refer to *Log View* in *Section 8 Web Browser Interface* for the procedure to check the error log contents from the Web browser window.

p.195

▪ Unfixed Operation Mode Error

See if the control signal line is connected correctly to the 24 VDC terminal on the power source. Check for sources of noise around the Cable.

▪ User Configuration Memory Error (Host Device Communications Conditions Settings)

Initialize the settings to restore normal operation. You can connect a computer to the network, start a Web browser, and return the settings to the default values from the Web browser window.

Refer to *Initializing the Settings* in *Configuration* in *Section 8 Web Browser Interface* for the procedure to Initializing through the Web Server.

p.206

■ Multi-Reader/Writer Execution Error

Check the combination of the Multi-Reader/Writer Mode and the communications option.

IP Address Duplication Error

Turn OFF the power supply to the Reader/Writer, remove the Reader/Writer from the network, correct the IP addresses, add the Reader/Writer to the network, and turn the power supply back ON.

System Errors

Turn OFF the power supply, check the wiring, and then turn ON the power supply. If the problem does not change, recovery is not possible for the error. Replace the Reader/Writer.

■ Multi-Reader/Writer Execution Error

Check the combination of the Multi-Reader/Writer Mode and the RF Tag communications option.
Or, check the IP address settings to see if the Slave Reader/Writer is using the same IP address as the Master Reader/Writer.

The RF Tag communications commands that you can use during multi-Reader/Writer operation (Field Extension Mode or High-speed Traveling Mode) are shown in the following table.
If you use any RF Tag communications command that cannot be used for the Master Reader/Writer, an execution status error will be indicated in the response.

▪ Commands That Can Be Addressed to a Master Reader/Writer

RF Tag communications command	Multi-Reader/Writer Mode	
	Field Extension Mode	High-speed Traveling Mode
READ DATA	Supported	Supported
WRITE DATA	Supported	Not supported
DATA FILL	Not supported	Not supported
RF TAG OVERWRITE COUNT CONTROL	Not supported	Not supported
READ ID	Supported	Not supported
COPY DATA	Not supported	Not supported
LOCK	Not supported	Not supported

▪ Commands That Can Be Acknowledged by a Slave Reader/Writer

The following table shows the commands that a Reader/Writer that is operating as a slave can acknowledge.

If an unsupported command is received by a Slave Reader/Writer, an execution status error will be indicated in the response.

Command type	Name	Supported
RF Tag communications	READ DATA	No
	WRITE DATA	No
	READ ID	No
	COPY DATA	No
	DATA FILL	No
	LOCK	No
	RF TAG OVERWRITE COUNT CONTROL	No
	RESTORE DATA	No
Reader/Writer settings	SET TAG COMMUNICATIONS OPTION	No
	GET TAG COMMUNICATIONS OPTION	Yes
	SET TAG COMMUNICATIONS CONDITIONS	No
	GET TAG COMMUNICATIONS CONDITIONS	Yes
	SET TCP/IP COMMUNICATIONS CONDITIONS	No
	GET TCP/IP COMMUNICATIONS CONDITIONS	Yes
	SET DEVICE NAME	No
	GET DEVICE NAME	Yes
	SET TCP/IP COMMUNICATIONS CONDITIONS	No
	GET TCP/IP COMMUNICATIONS CONDITIONS	Yes
	SET WEB PASSWORD	No
	GET WEB PASSWORD	Yes
	INITIALIZE	No

Command type	Name	Supported
Checking Reader/Writer information	MEASURE NOISE	No
	GET MODEL INFORMATION	Yes
	GET FIRMWARE VERSION	Yes
	GET MAC ADDRESS	Yes
	GET READER/WRITER OPERATING STATUS	Yes
	GET OPERATING TIME	Yes
	GET RECENT ERROR COMMAND INFORMATION	Yes
	GET COMMUNICATIONS ERROR LOG	Yes
	GET SYSTEM ERROR LOG	Yes
	GET RESTORE INFORMATION	Yes
Reader/Writer operation control	STOP	No
	RESET	No
RFID maintenance	SET COMMUNICATIONS DIAGNOSTICS SETTINGS	No
	GET COMMUNICATIONS DIAGNOSTICS SETTINGS	Yes
Multi-Reader/ Writer operation	SET MULTI-READER/ WRITER OPERATION	No
	GET MULTI-READER/ WRITER OPERATION SETTINGS	Yes
	GET MULTI-READER/ WRITER OPERATION STATUS	Yes

CHECK!

You can use the maintenance functions with Reader/Writers with firmware version 3.00 or higher.

CHECK!

All linked Reader/Writers must have firmware version 3.00 or higher.

V680S Command Errors

You can check errors detected by the Reader/Writer in the Response Area where the Reader/Writer returns the response after command execution.

You can also check error information by sending the GET COMMAND ERROR LOG command to the Reader/Writer or by using the Error Log View on a Web browser. The following table provides detailed error information and countermeasures.

Error name	Error code	Countermeasure
Command parameter error	1005 hex	Check the contents of the command and send the correct contents. Make sure the command parameter values are correct.
Execution status error	1006 hex	Send the command again. Execution is not possible because the Reader/Writer is performing other processing.

RF Tag Communications Errors

You can check errors detected by the Reader/Writer in the Response Area where the Reader/Writer returns the response after command execution.
You can also check error information by sending the GET COMMAND ERROR LOG command to the Reader/Writer or by using the Error Log View on a Web browser. The following table provides detailed error information and countermeasures.

Error name	Error code	Countermeasure
RF Tag missing error	2001 hex	Change the control timing so that communications start when there is an RF Tag in the communications field of the Reader/Writer. Measure the noise and implement noise countermeasures. *p.101* Check the influence of surrounding metal and make sure there is sufficient communications range.
RF Tag communications error	2002 hex	Change the control timing so that communications start when there is an RF Tag in the communications field of the Reader/Writer. Measure the noise and implement noise countermeasures. *p.101* Check the influence of surrounding metal and make sure there is sufficient communications range.
UID mismatch error	2003 hex	Perform communications when the RF Tag for which data is to be restored is in the communications field of the Reader/Writer.
RF Tag address error	2004 hex	Adjust the processing area (addresses) for communications with the RF Tag to match the memory area of the RF Tag.
RF Tag lock error	2005 hex	The RF Tag memory region that contains the communications processing area (addresses) is locked. Check the communications processing area (addresses) and perform the process again or replace the RF Tag.
RF Tag verification error	2006 hex	Repeat the processing while the RF Tag is in the communications field of the Reader/Writer. Measure the noise and implement noise countermeasures. *p.101* Check the influence of surrounding metal and make sure there is sufficient communications range.
RF Tag data lost error	2007 hex	Repeat the processing while the RF Tag is in the communications field of the Reader/Writer. Measure the noise and implement noise countermeasures. *p.101* Check the influence of surrounding metal and make sure there is sufficient communications range.
RF Tag system error	2008 hex	Change to an RF Tag that is supported by the Reader/Writer.
RF Tag overwriting error	2009 hex	Replace the RF Tag.
Reader/Writer connection error	200A hex	Make sure that the copy destination Reader/Writer is operating normally. Make sure that the copy destination Reader/Writer is normally connected to the network and that there are no mistakes in the settings.
Communications connection error between Reader/Writers	200B hex	Make sure that the Slave Reader/Writers have started normally before you execute multi-Reader/Writer functions. Make sure that the Slave Reader/Writers are normally connected to the network and that there are no mistakes in the settings.

Troubleshooting Flowcharts

If an error occurs, fully check the whole situation, determine the relationship between the system and any other devices, and refer to the following flowcharts for the troubleshooting procedures.

Main Check Flowchart

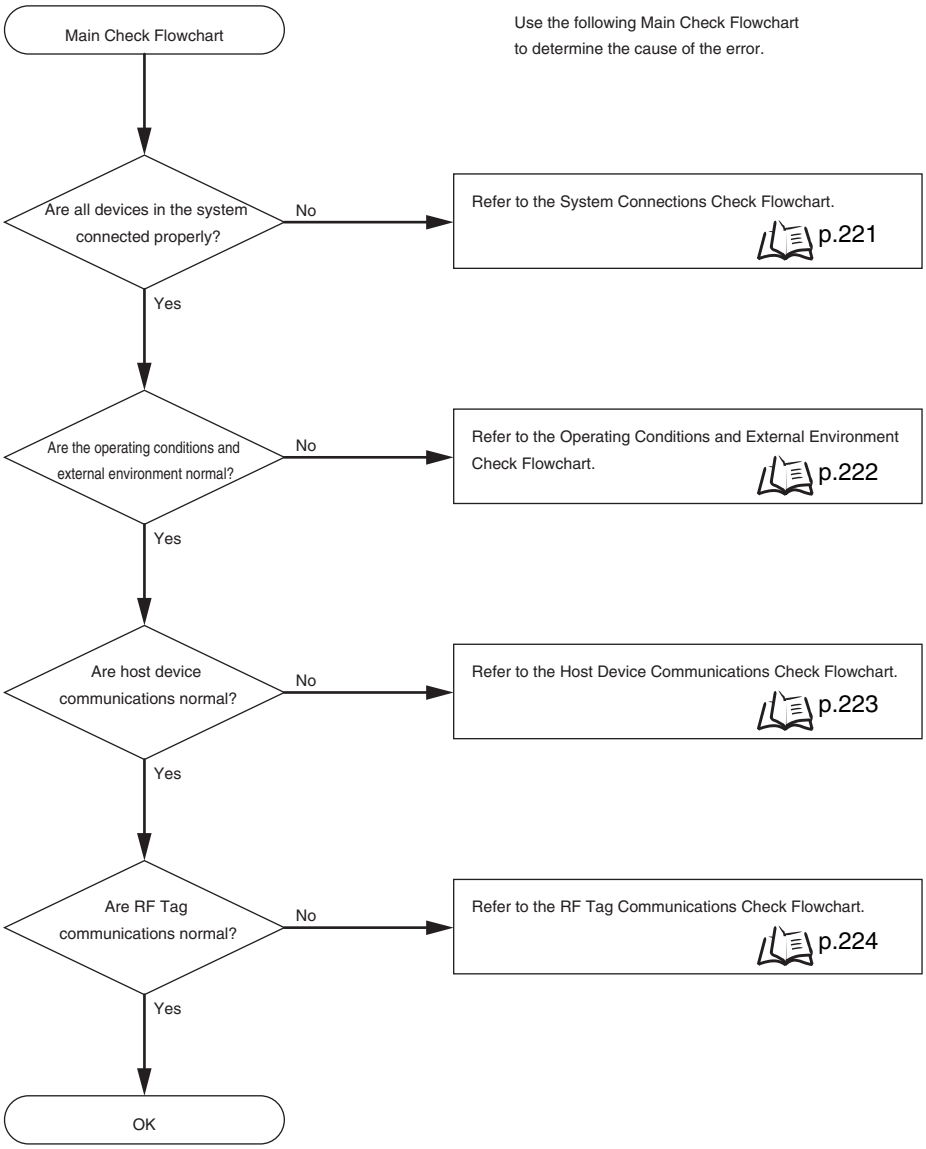

System Connections Check Flowchart

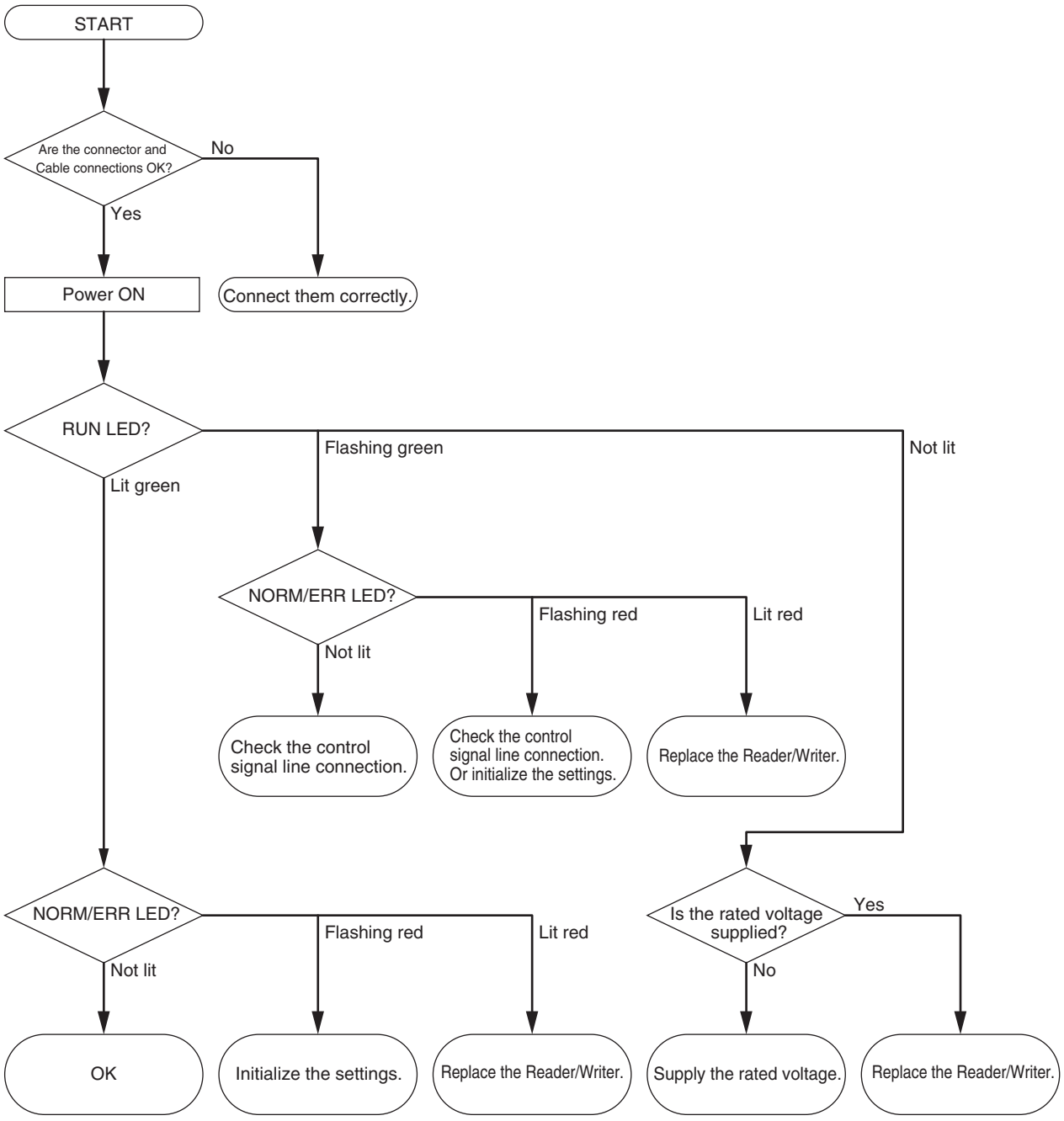

Operating Conditions and External Environment Check Flowchart

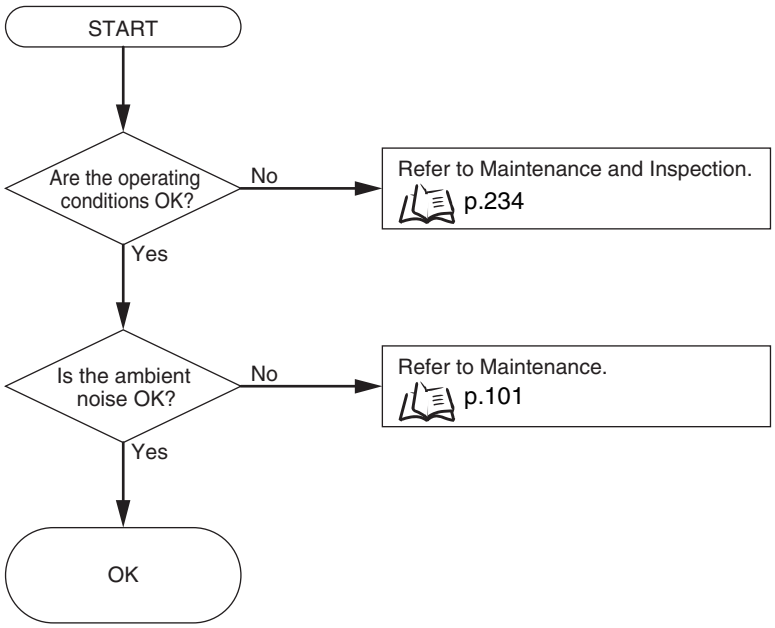

Host Device Communications Check Flowchart

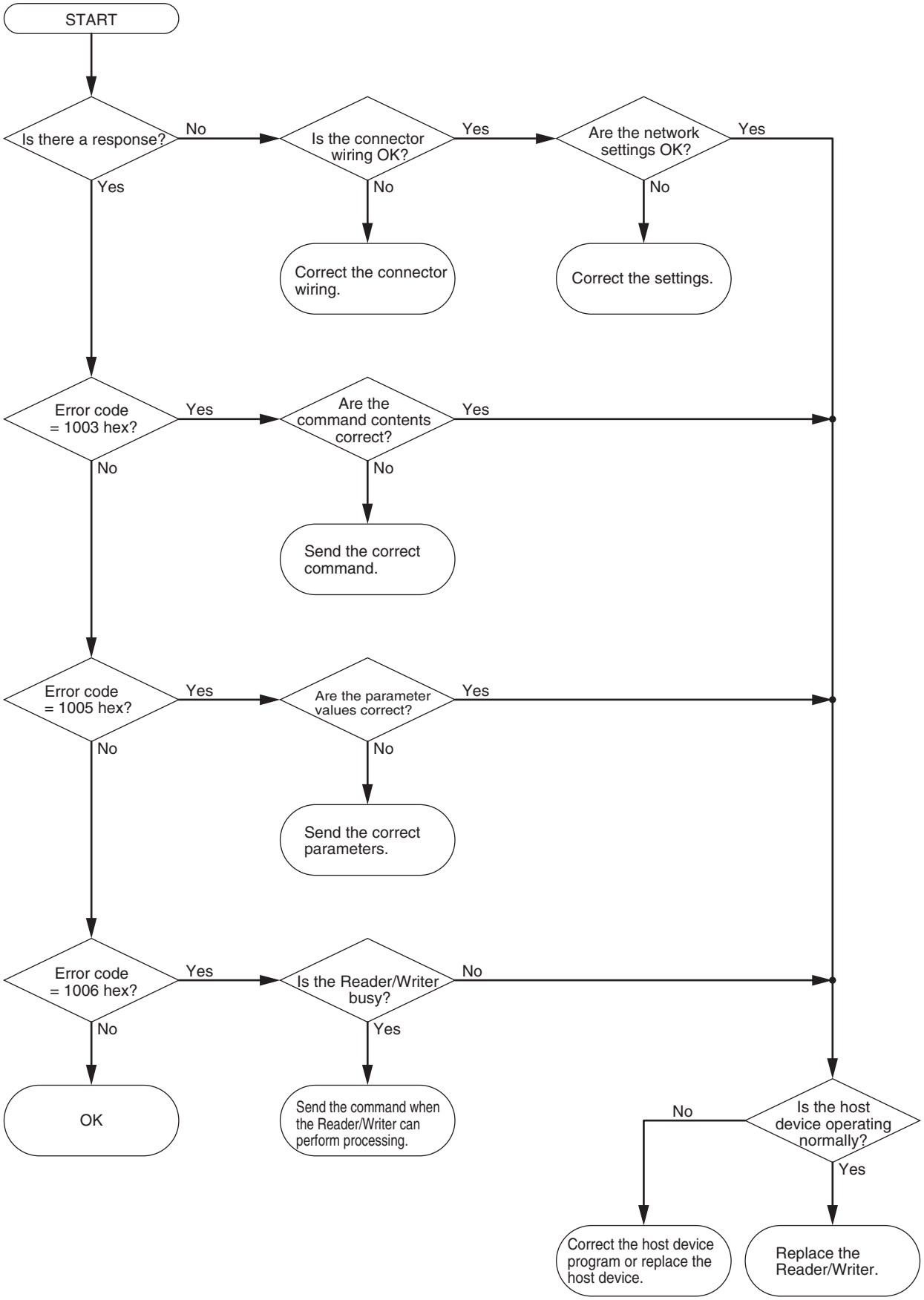

RF Tag Communications Check Flow

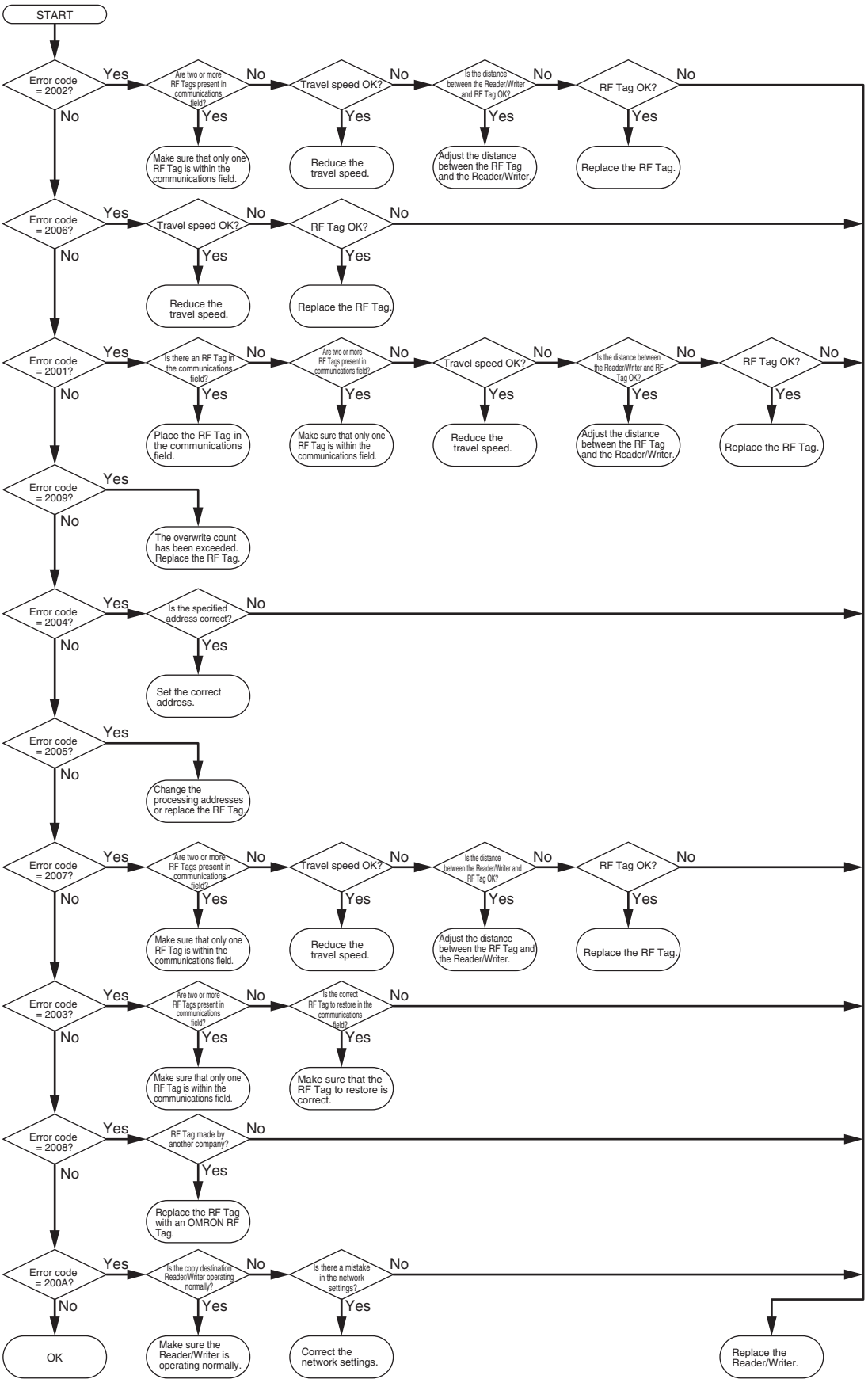

CHECK! Refer to *RFID System Maintenance* in *Section 6 Functions* , when Communication Diagnosis is enabled and the diagnostic result is " Warning"

p.108

About The Ethernet Communication Abnormality

CHECK!

If an Ethernet network is configured into a loop as shown below, broadcast packets are accumulated in the band, and the communication is disabled. Therefore, do not configure the Ethernet network into a loop.

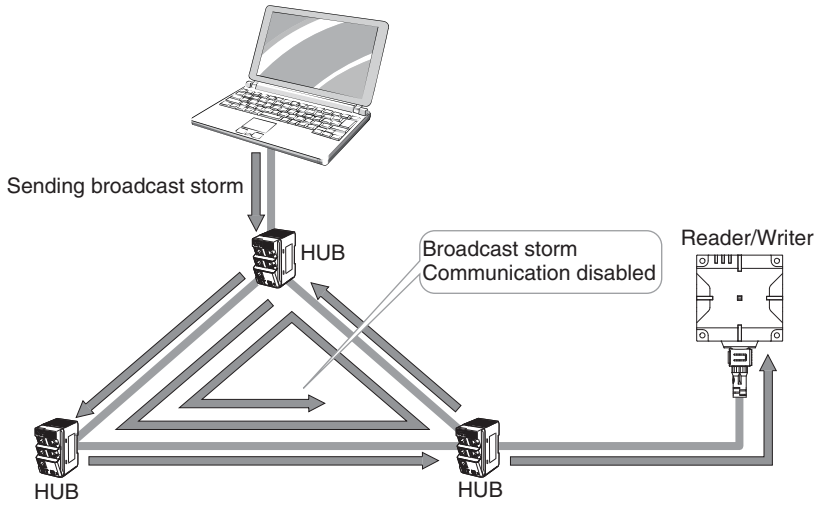

CHECK!

When a large amount of broadcast packets or multicast packets flow into the Ethernet network, Reader/Writers may stop its operation. Please do not send a large amount of packet. Please separate the Reader/Writers from the network segment that broadcast or multicast packets flow.

When the Web browser screen is not displayed or the screen layout is strange

When the Web browser screen is not displayed or the screen layout is strange.
Please reload. If the problem persists even after reloading, follow the procedure below to delete the temporary Internet file and then display it again.

Google Chrome

(1)Open the settings from “Google chrome settings” at the top right of the screen.

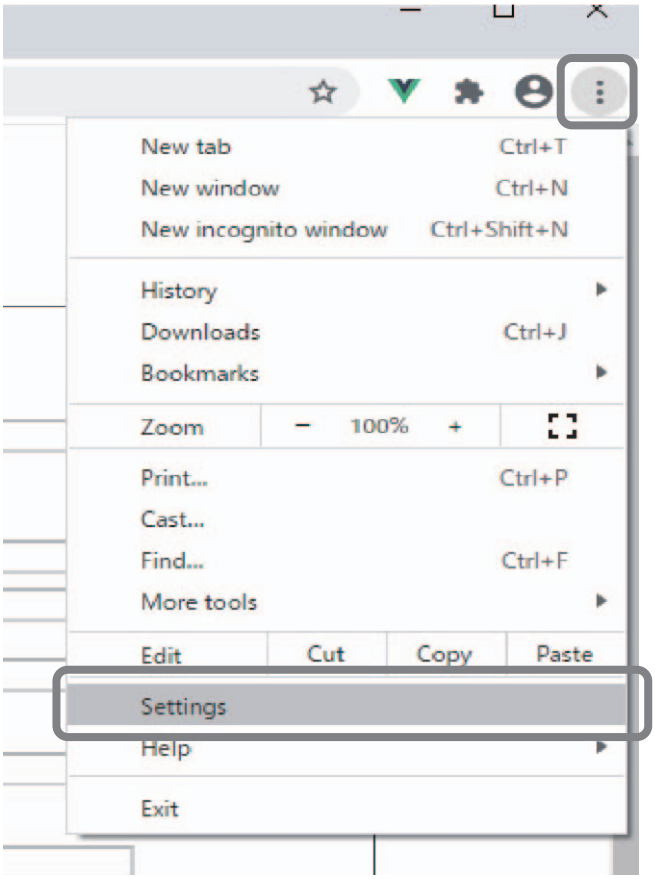

(2)Select Clear browsing data in the privacy and security section.

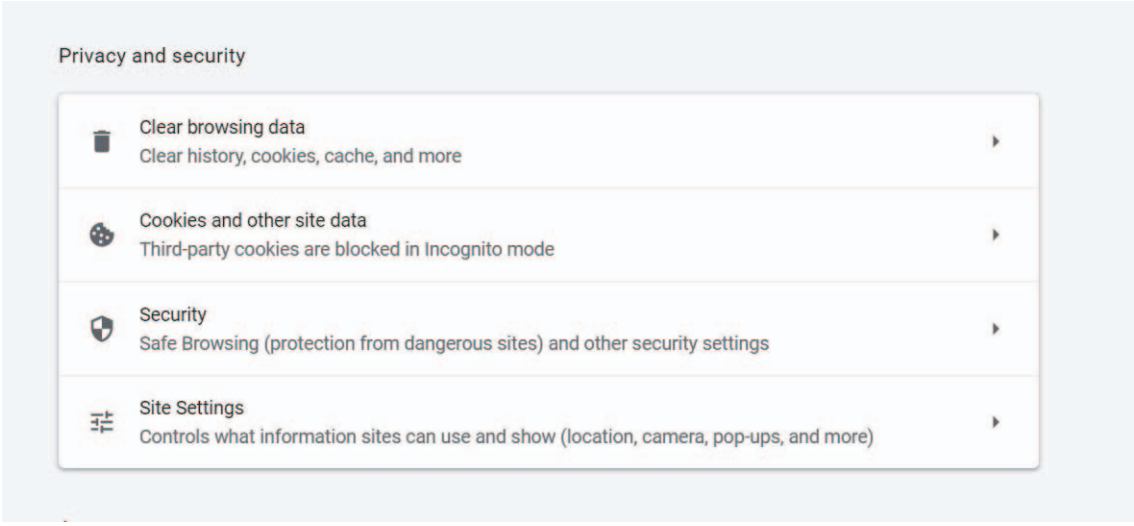

(3)Time range selects all time. Check cached images and files and select clear data.

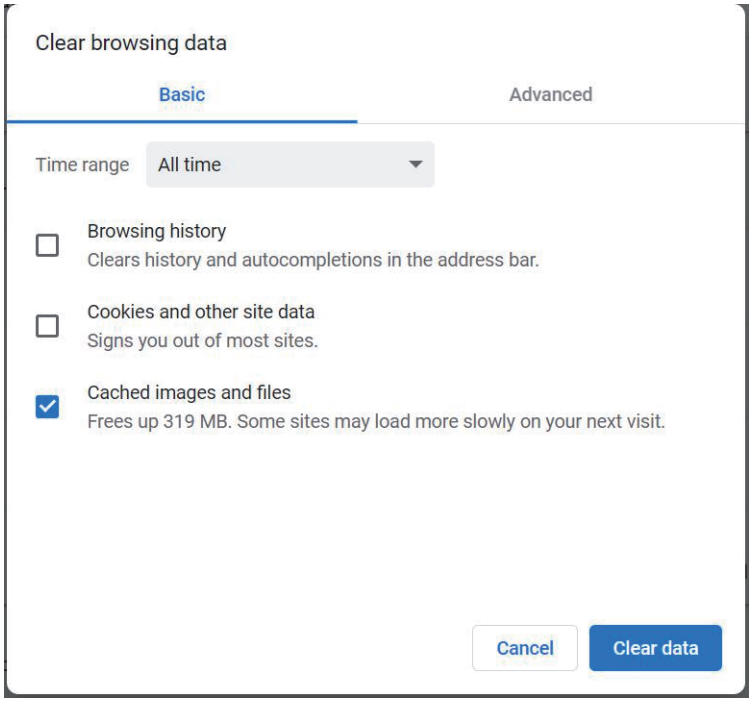

Internet explorer11

(1)Click the Tools menu and select Internet Options.
Click the delete… button in the Browsing History section of the General tab.

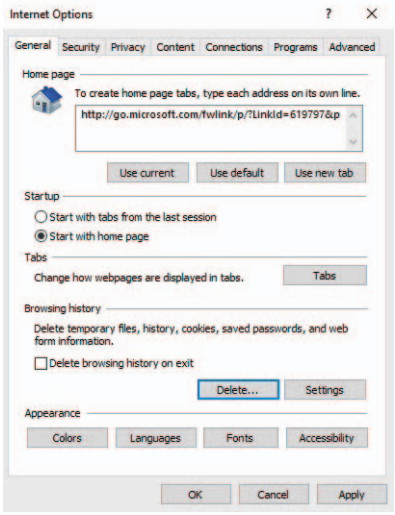

(2)Check "Temporary Internet files and website files" and click Delete.

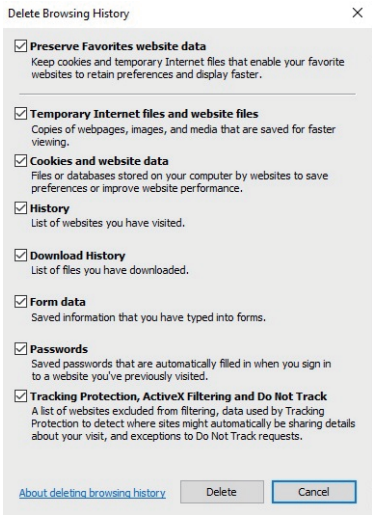

Microsoft Edge

(1)Click the three points in the upper right and click “Settings”.

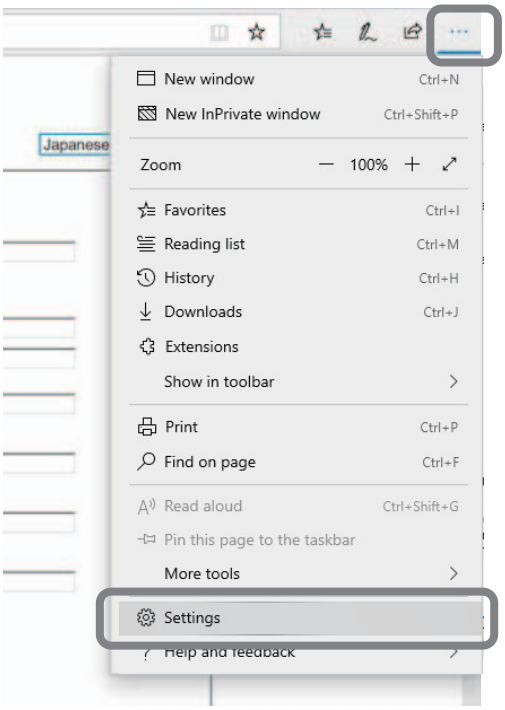

(2)Click “choose what to clear” in the “Privacy & Security” tab.

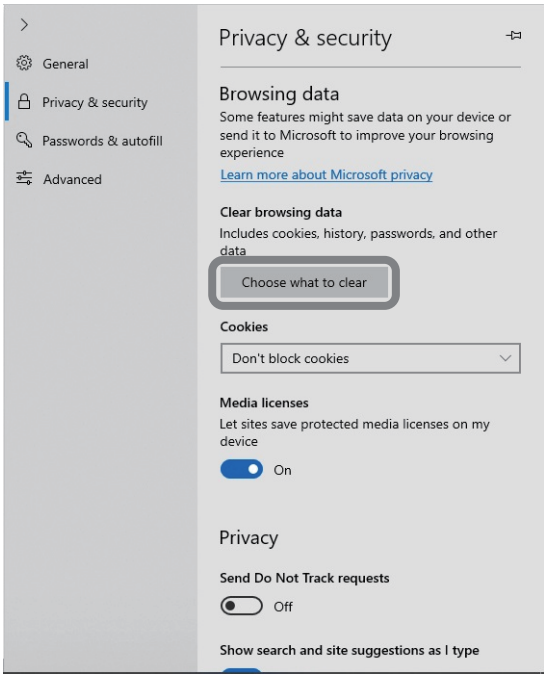

(3)Check “Cached data and files” and click Clear.

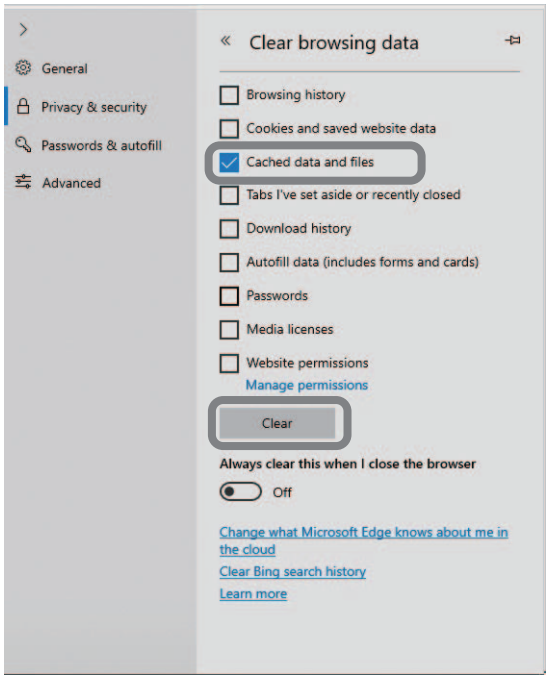

Safe Mode

In addition to the Run Mode that is used for normal operation, the Reader/Writer supports a Safe Mode operation mode. The Safe Mode is used when you do not remember the IP address that is set in the Reader/Writer.
If the Reader/Writer starts in Safe Mode, the following settings are always used. This allows you to access the Reader/Writer even if you forget the IP address so that you can set the IP address again.

IP address	192.168.1.200
Subnet mask	255.255.255.0

CHECK!

When the Reader/Writer is running in safe mode, some functions can not be used (Ex. RF tag communication and noise measurement function, etc). When you use the Reader/Writer normally, please start the Reader/Writer in RUN mode.

Starting in Safe Mode

(1) Connect the control signal line from the Cable to 0 V on the DC power supply. Connect the other two lines (24P and 24N) to the DC power supply terminals.

(2) Turn ON the power supply to the Reader/Writer.

(3) The RUN indicator on the Reader/Writer will flash green

After the Reader/Writer starts in Safe Mode, reset or initialize the IP address from the Web browser or host device.

CHECK!

If an error occurs in the Reader/Writer, the Reader/Writer may automatically start in Safe Mode
Refer to *Error Descriptions* in this Section for for more information.
p.210

MEMO

Section 10
Maintenance and Inspection

Maintenance and Inspection 234

Maintenance and Inspection

The Reader/Writer must be inspected on a daily or periodic basis so that the functions remain in good condition. The Reader/Writer consists of semiconductors that last almost indefinitely. The following malfunctions, however, may result due to the operating environment and conditions.

(1) Element deterioration due to overvoltage or overcurrent.

(2) Element deterioration due to continuous stress caused by high ambient temperature.

(3) Connector contact faults or insulation deterioration due to humidity and dust.

(4) Connector contact faults or element corrosion due to corrosive gas.

■ Inspection Items

No.	Inspection item	Details	Criteria	Remarks
1	Power supply voltage fluctuation	(1) Make sure that the supply voltage fluctuation at the power supply terminal block is within the permissible range.	Within supply voltage specified range	Multimeter
		(2) Make sure that there are no frequent instantaneous power failures or radical voltage fluctuations.	Within permissible voltage fluctuation range	Power supply analyzer
2	Ambient environment (a) Temperature (b) Humidity (c) Vibration and shock (d) Dust (e) Corrosive gas	 (a) Within the specified range (b) Within the specified range (c) Influence of vibration or shock from machines (d) Make sure that the Reader/Writer is free of accumulated dust and foreign particles. (e) Make sure that no metal parts are discolored or corroded.	 (a) -10 to 55°C (b) 25% to 85% (c) Within the specified range (d) Must not be present. (e) Must not be present.	Maximum and minimum thermometer Hygrometer
3	Panel condition (a) Ventilation (b) Damage to packing for any enclosing structure	 (a) Make sure that the system is ventilated properly with natural ventilation, forced ventilation, or cooling air. (b) Make sure that the panel packing is properly attached with no damage.	 (a) The interior temperature must be between -10 and 55°C with proper ventilation. (b) The packing must have no damage.	---
4	Mounting conditions	(1) Make sure that the Reader/Writer is securely mounted.	No loose screws	---
		(2) Make sure that each connector is fully inserted.	Each connector must be locked or securely tightened with screws.	---
		(3) Make sure that no wire is broken or nearly broken.	Must be no wire that is broken or nearly broken.	---
		(4) Make sure that the distance between the RF Tags and Reader/Writer is within the specified range.	Within the specified range	---
5	RF Tag life	Manage the number of times data is written to each RF Tag.	The maximum number of overwrites must not be exceeded	---

Section 11
Appendices

Data Characteristics	236
RF Tag Communications Range (for Reference Only)	236
RF Tag Communications Time (for Reference Only)	244
Reader/Writer Installation Precautions	248
V680S-HMD63-PNT	248
V680S-HMD64-PNT	249
V680S-HMD66-PNT	251
RF Tag Installation Precautions	253
V680-D1KP54T	253
V680-D1KP66T	256
V680-D1KP66MT	259
V680-D1KP66T-SP	262
V680-D1KP58HTN	266
V680S-D2KF67	268
V680S-D2KF67M	271
V680S-D8KF67	274
V680S-D8KF67M	277
V680S-D2KF68	280
V680S-D2KF68M	283
V680S-D8KF68	286
V680S-D8KF68M	289
RF Tag Memory Capacities and Memory Types	292
RF Tag Memory Map	293
Chemical Resistance of the Reader/Writers and RF Tags	296
Degree of Protection	300
Differences in Address and Size Specifications between V680 and V680S Reader/Writers	302

Data Characteristics

RF Tag Communications Range (for Reference Only)

■ V680S-HMD63-PNT

(Unit: mm)

● V680S-HMD63-PNT and V680-D1KP54MT
(Back Surface: Metal)

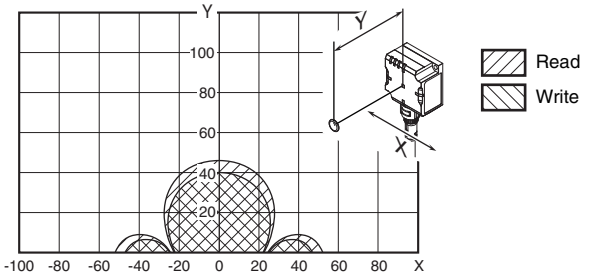

● V680S-HMD63-PNT and V680-D1KP66T
(Back Surface: Metal)

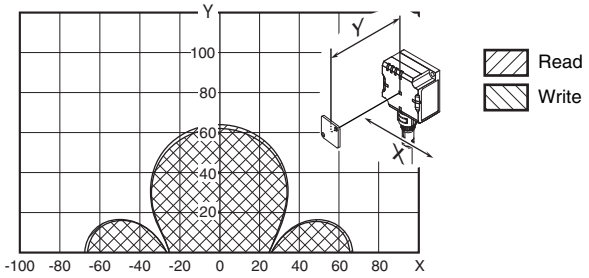

● V680S-HMD63-PNT and V680-D1KP66MT
(Back Surface: Metal)

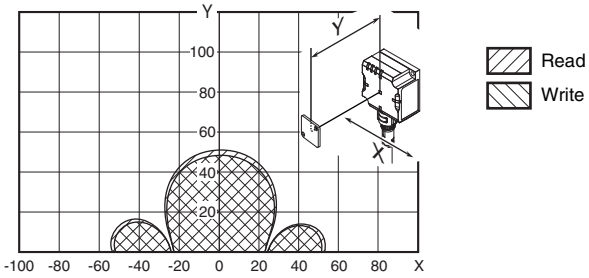

● V680S-HMD63-PNT and V680-D1KP66T-SP
(Back Surface: Metal)

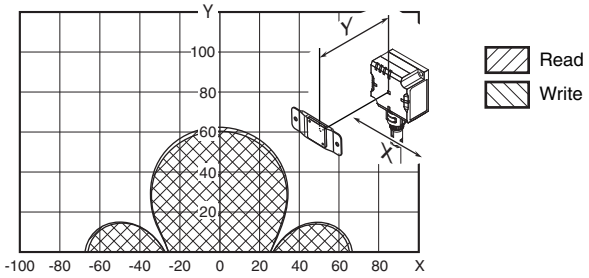

(Unit: mm)

● V680S-HMD63-PNT and V680S-D2KF67
(Back Surface: Metal)

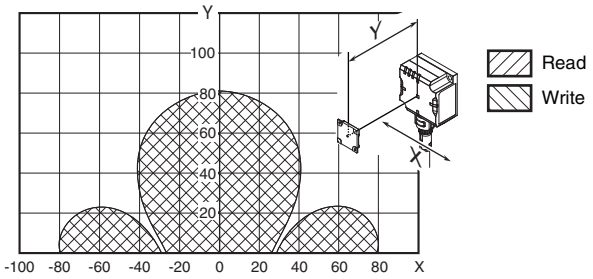

● V680S-HMD63-PNT and V680S-D2KF67M
(Back Surface: Metal)

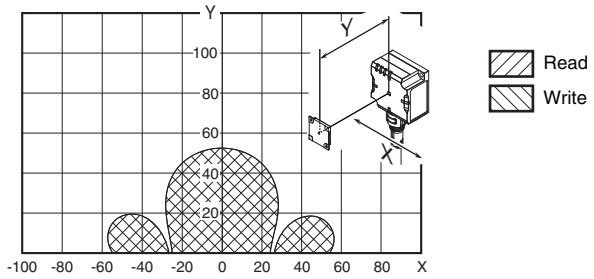

● V680S-HMD63-PNT and V680S-D8KF67
(Back Surface: Metal)

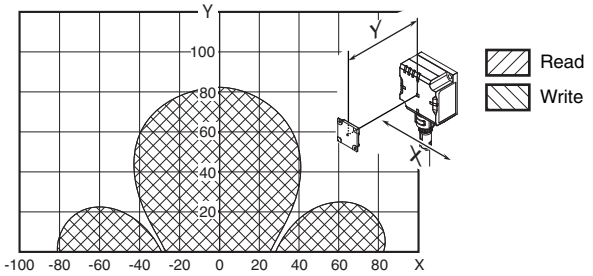

● V680S-HMD63-PNT and V680S-D8KF67M
(Back Surface: Metal) (Back Surface: Metal)

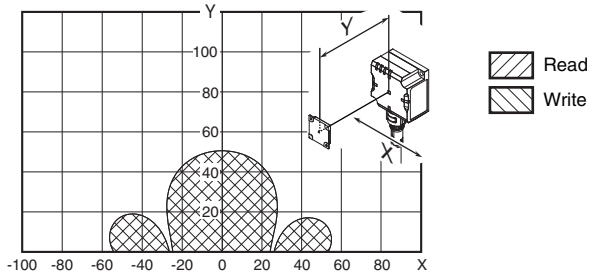

■ V680S-HMD64-PNT

(Unit: mm)

●V680S-HMD64-PNT and V680-D1KP54T
(Back Surface: Metal)

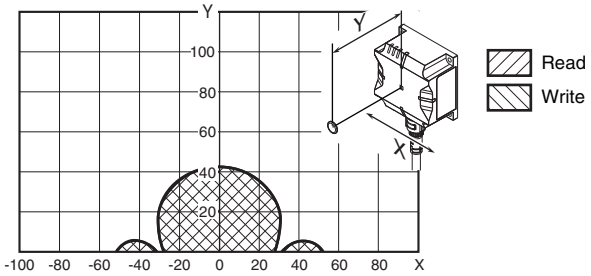

●V680S-HMD64-PNT and V680-D1KP66T
(Back Surface: Metal)

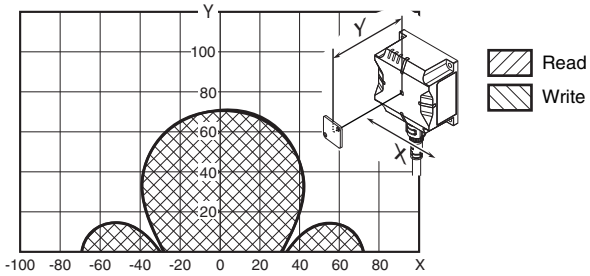

●V680S-HMD64-PNT and V680-D1KP66MT
(Back Surface: Metal)

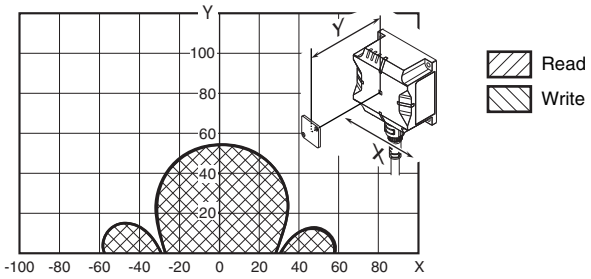

●V680S-HMD64-PNT and V680-D1KP66T-SP
(Back Surface: Metal)

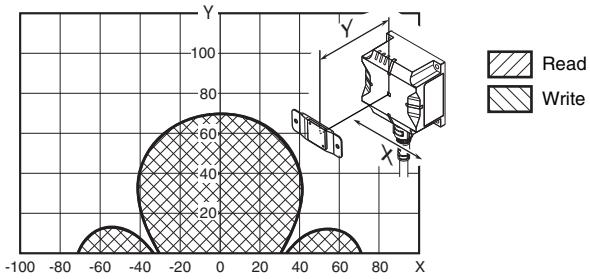

●V680S-HMD64-PNT and V680-D1KP58HTN
(Back Surface: Metal) (with Attachment, V680-A80)

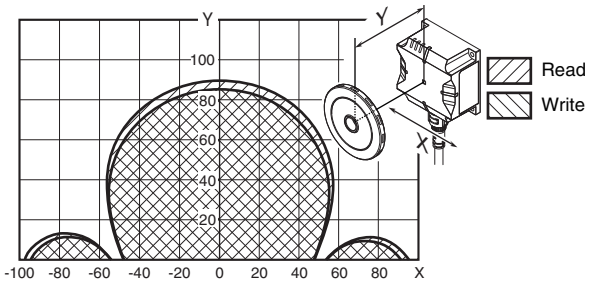

(Unit: mm)

●V680S-HMD64-PNT and V680S-D2KF67
(Back Surface: Metal)

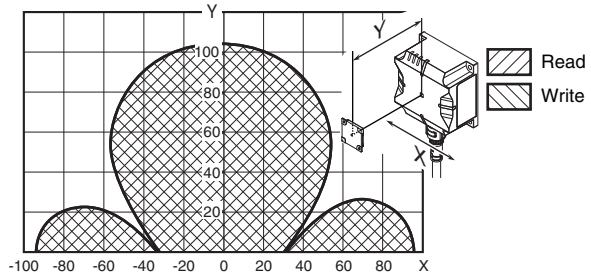

●V680S-HMD64-PNT and V680S-D2KF67M
(Back Surface: Metal) (Back Surface: Metal)

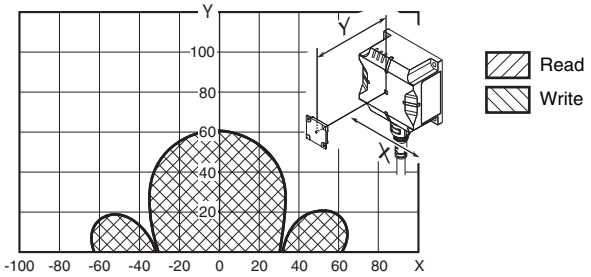

●V680S-HMD64-PNT and V680S-D8KF67
(Back Surface: Metal)

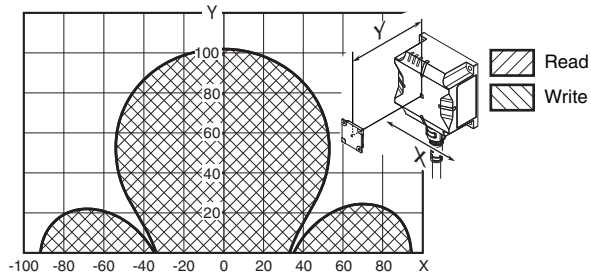

●V680S-HMD64-PNT and V680S-D8KF67M
(Back Surface: Metal) (Back Surface: Metal)

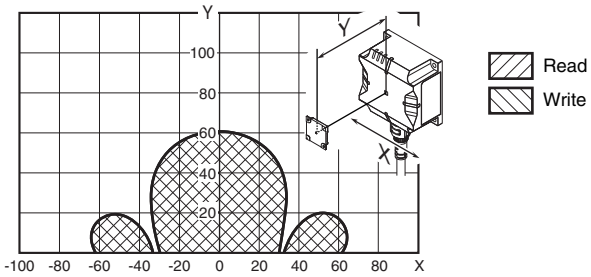

(Unit: mm)

●V680S-HMD64-PNT and V680S-D2KF68
(Back Surface: Metal) (Horizontal-facing RF Tag)

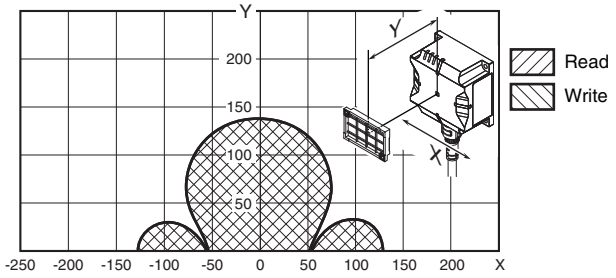

●V680S-HMD64-PNT and V680S-D2KF68
(Back Surface: Metal) (Vertical-facing RF Tag)

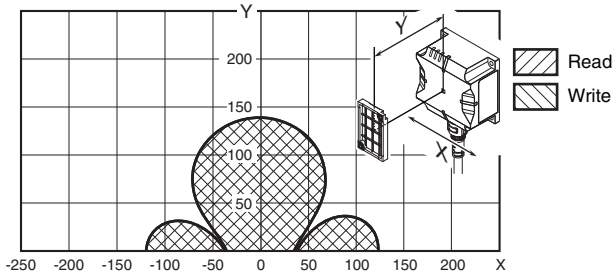

●V680S-HMD64-PNT and V680S-D2KF68M
(Back Surface: Metal) (Back Surface: Metal)
(Horizontal-facing RF Tag)

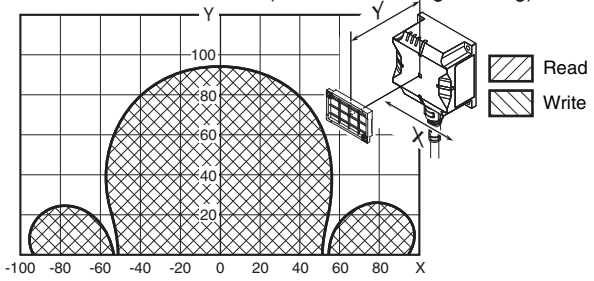

●V680S-HMD64-PNT and V680S-D2KF68M
(Back Surface: Metal) (Back Surface: Metal)
(Vertical-facing RF Tag)

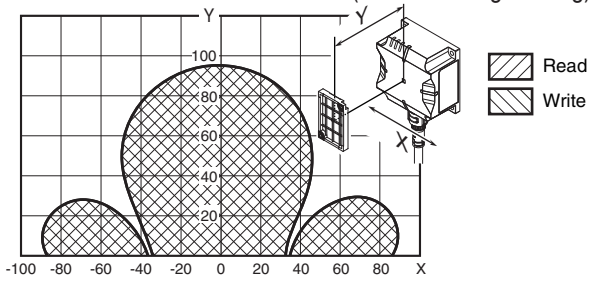

●V680S-HMD64-PNT and V680S-D8KF68
(Back Surface: Metal) (Horizontal-facing RF Tag)

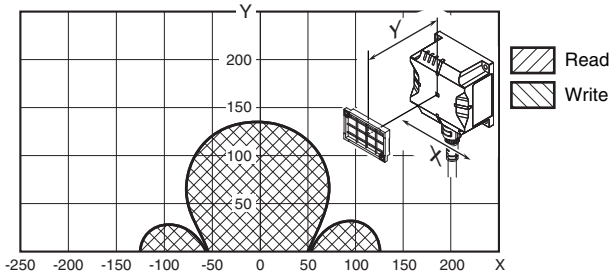

●V680S-HMD64-PNT and V680S-D8KF68
(Back Surface: Metal) (Vertical-facing RF Tag)

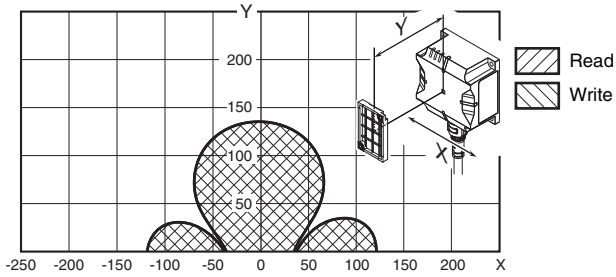

●V680S-HMD64-PNT and V680S-D8KF68M
(Back Surface: Metal) (Back Surface: Metal)
(Horizontal-facing RF Tag)

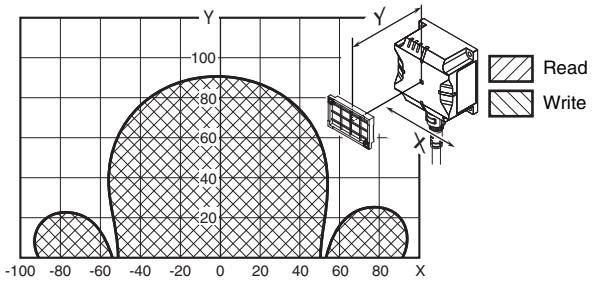

●V680S-HMD64-PNT and V680S-D8KF68M
(Back Surface: Metal) (Back Surface: Metal)
(Vertical-facing RF Tag)

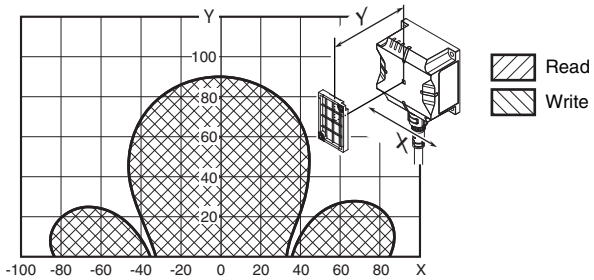

■ V680S-HMD66-PNT

(Unit: mm)

●V680S-HMD66-PNT and V680-D1KP54T
(Back Surface: Metal)

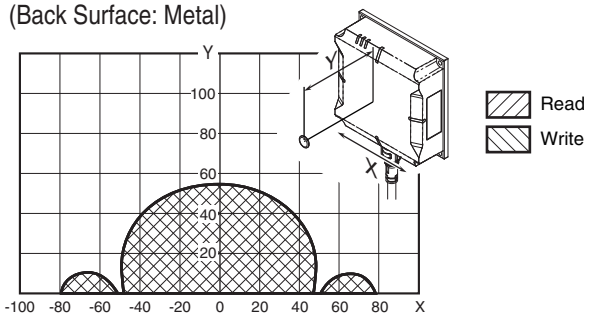

●V680S-HMD66-PNT and V680-D1KP66T
(Back Surface: Metal)

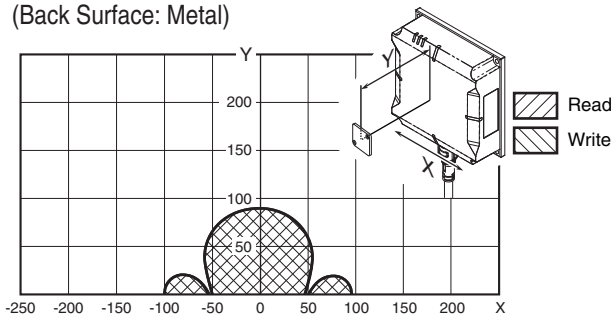

●V680S-HMD66-PNT and V680-D1KP66MT
(Back Surface: Metal) (Back Surface: Metal)

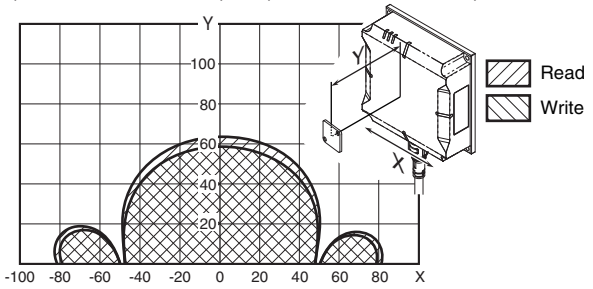

●V680S-HMD66-PNT and V680-D1KP66T-SP
(Back Surface: Metal)

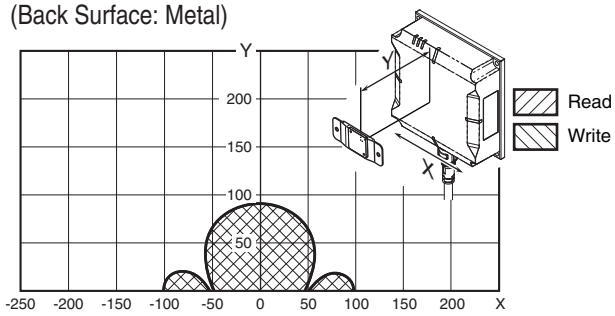

V680S-HMD66-PNT and V680-D1KP58HTN
(Back Surface: Metal) (with Attachment, V680-A80)

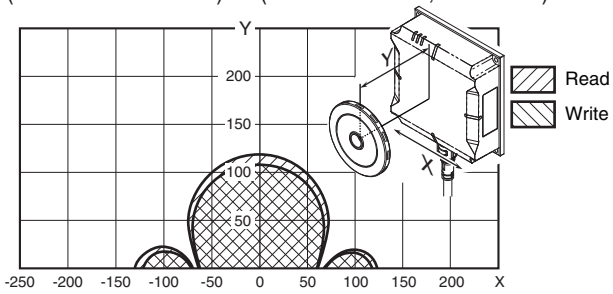

(Unit: mm)

●V680S-HMD66-PNT and V680S-D2KF67
(Back Surface: Metal)

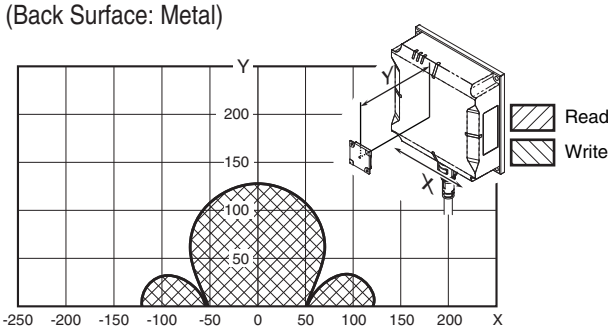

●V680S-HMD66-PNT and V680S-D2KF67M
(Back Surface: Metal) (Back Surface: Metal)

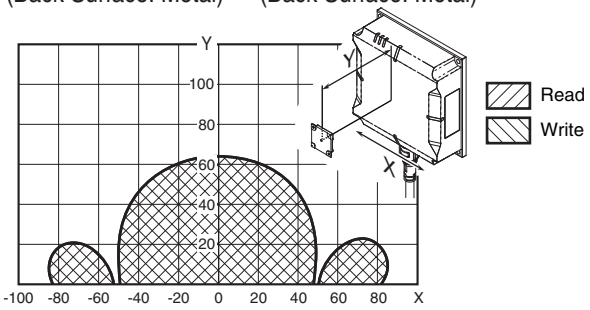

●V680S-HMD66-PNT and V680S-D8KF67
(Back Surface: Metal)

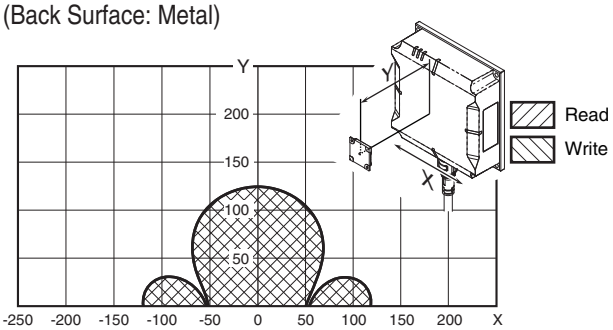

●V680S-HMD66-PNT and V680S-D8KF67M
(Back Surface: Metal) (Back Surface: Metal)

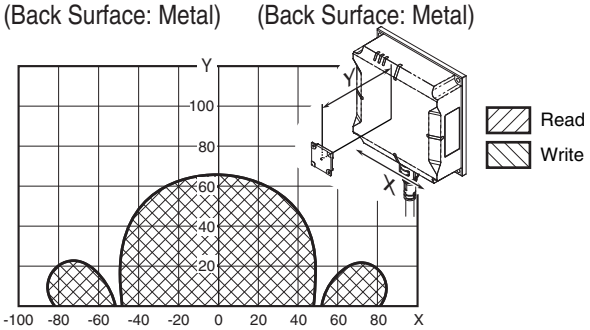

(Unit: mm)

●V680S-HMD66-PNT and V680S-D2KF68
(Back Surface: Metal) (Horizontal-facing RF Tag)

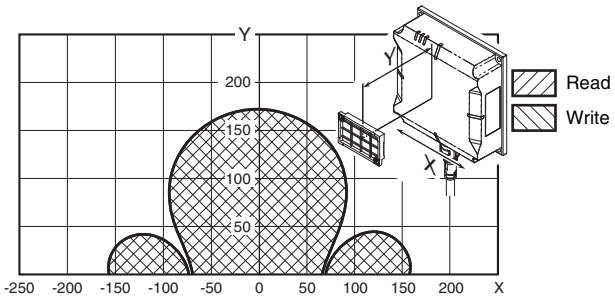

●V680S-HMD66-PNT and V680S-D2KF68
(Back Surface: Metal) (Vertical-facing RF Tag)

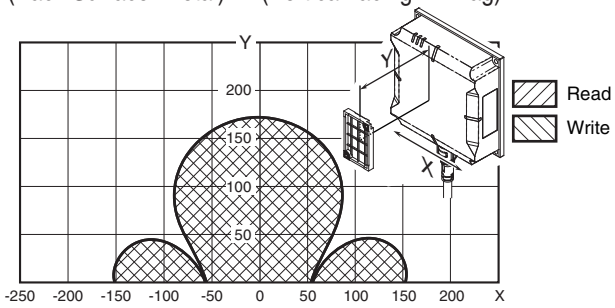

●V680S-HMD66-PNT and V680S-D2KF68M
(Back Surface: Metal) (Back Surface: Metal)
(Horizontal-facing RF Tag)

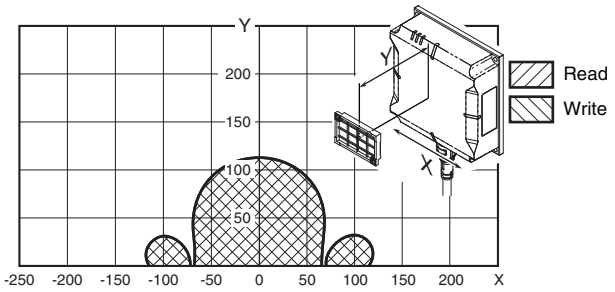

●V680S-HMD66-PNT and V680S-D2KF68M
(Back Surface: Metal) (Back Surface: Metal)
(Vertical-facing RF Tag)

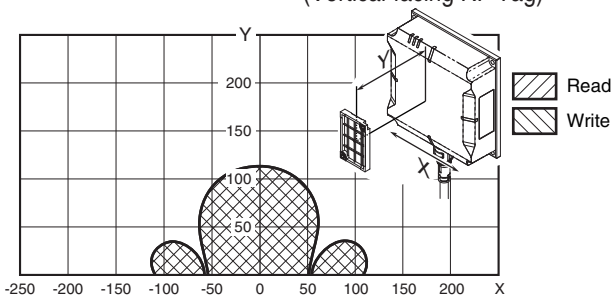

●V680S-HMD66-PNT and V680S-D8KF68
(Back Surface: Metal) (Horizontal-facing RF Tag)

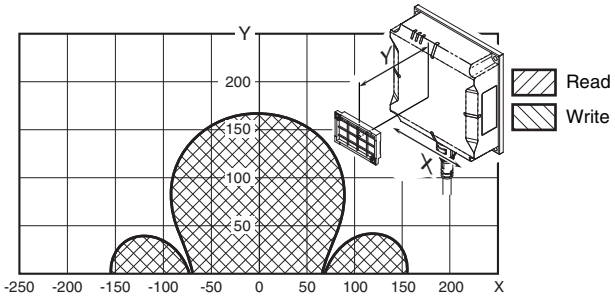

●V680S-HMD66-PNT and V680S-D8KF68
(Back Surface: Metal) (Vertical-facing RF Tag)

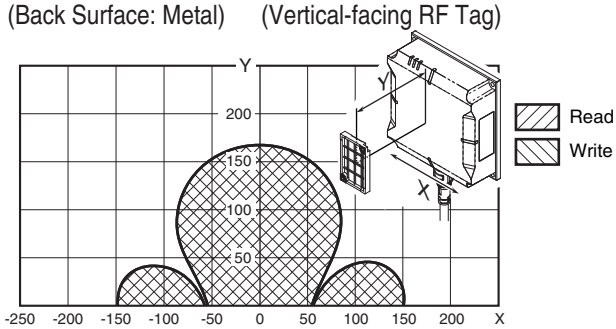

●V680S-HMD66-PNT and V680S-D8KF68M
(Back Surface: Metal) (Back Surface: Metal)
(Horizontal-facing RF Tag)

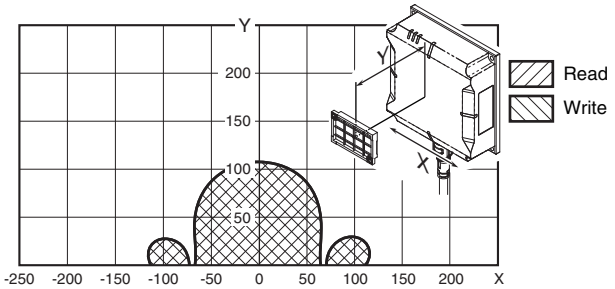

●V680S-HMD66-PNT and V680S-D8KF68M
(Back Surface: Metal) (Back Surface: Metal)
(Vertical-facing RF Tag)

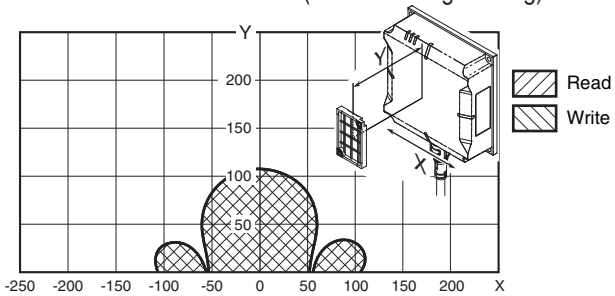

RF Tag Communications Time (for Reference Only)

■ Communications Time

Communications time is from the rise of the RF signal to the last bit of the response from the RF tag.

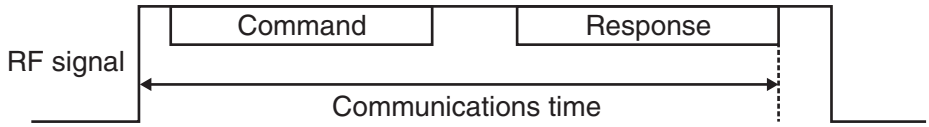

RF signal : The radio wave that the Reader/Writer turns ON the RF Tag.
The Reader/Writer turns ON this RF signal and then sends the command to start communications with the RF tag.
When the communications end, the Reader/Writer turns OFF the RF signal

Command : The command that the Reader/Writer sends to the RF Tag.

Response : The response that the RF Tag returns to the Reader/Writer.

The communication time is approximately 200ms longer when enabling Communications Diagnosis function.

V680S-HMD6□-PNT and V680-D1KP□□

There are no differences between Communication speed: “normal” and “high”.

Command	Communications time (ms) N: No. of bytes processed
Read	T= 1.0N + 20.1
Write (with verification)	T= 1.8N + 45.2
Write (without verification)	T= 1.5N + 41.4

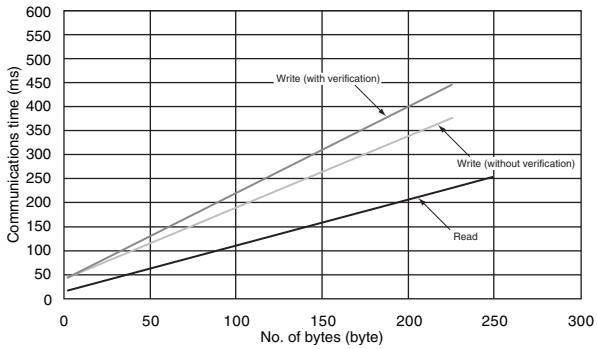

V680S-HMD6□-PNT and V680S-D2KF6□ (Communications speed setting: High speed)

• Communication Option: Other than FIFO Repeat (With ID code check)

Command	Communications time (ms) N: No. of bytes processed
Read	T= 0.4N + 17.4
Write (with verification)	T= 1.0N + 51.9
Write (without verification)	T= 0.7N + 35.2

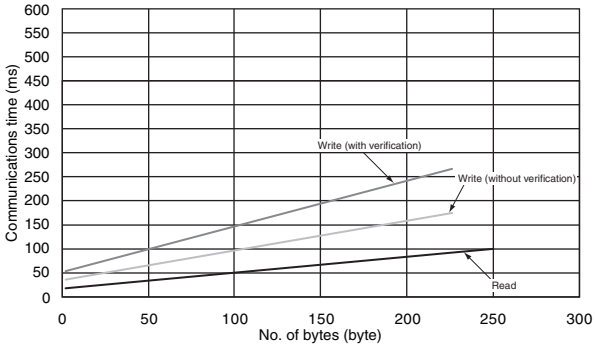

• Communication Option: FIFO Repeat (With ID code check)

Command	Communications time (ms) N: No. of bytes processed
Read	T= 0.4N + 24.8
Write (with verification)	T= 1.2N + 76.1
Write (without verification)	T= 0.8N + 51.6

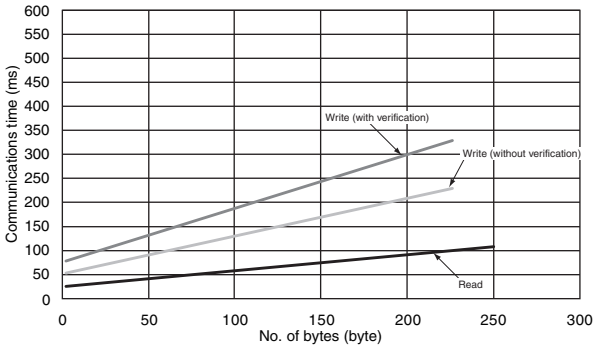

V680S-HMD6□-PNT and V680S-D8KF6□ (Communications speed setting: High speed)

• Communication Option: Other than FIFO Repeat (With ID code check)

Command	Communications time (ms) N: No. of bytes processed
Read	T= 0.4N + 33.0
Write (with verification)	T= 0.9N + 95.1
Write (without verification)	T= 0.5N + 65.8

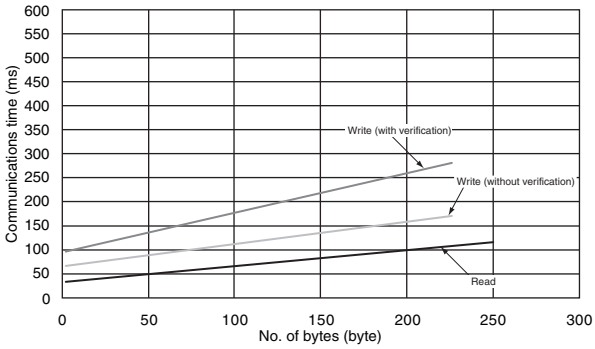

• Communication Option: FIFO Repeat (With ID code check)

Command	Communications time (ms) N: No. of bytes processed
Read	T= 0.4N + 40.4
Write (with verification)	T= 1.0N + 116.5
Write (without verification)	T= 0.6N + 45.8

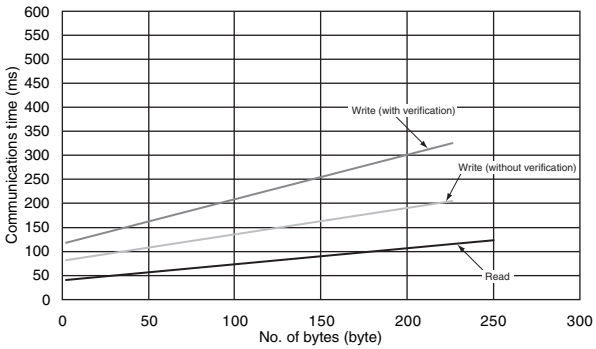

V680S-HMD6□-PNT and V680S-D2KF6□ (Communications speed setting: Normal speed)

• Communication Option: Other than FIFO Repeat (With ID code check)

Command	Communications time (ms) N: No. of bytes processed
Read	T= 0.9N + 18.7
Write (with verification)	T= 1.7N + 42.1
Write (without verification)	T= 0.9N + 32.0

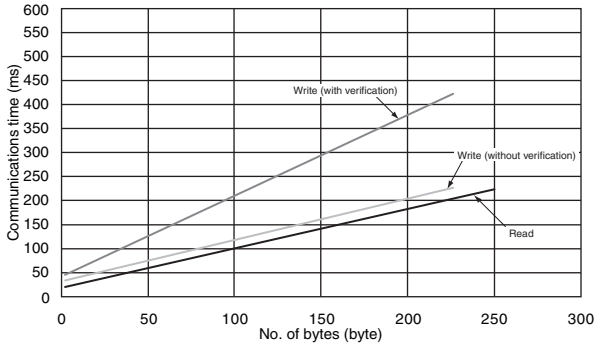

• Communication Option: FIFO Repeat (With ID code check)

Command	Communications time (ms) N: No. of bytes processed
Read	T= 1.2N + 27.3
Write (with verification)	T= 2.4N + 60.2
Write (without verification)	T= 1.2N + 46.4

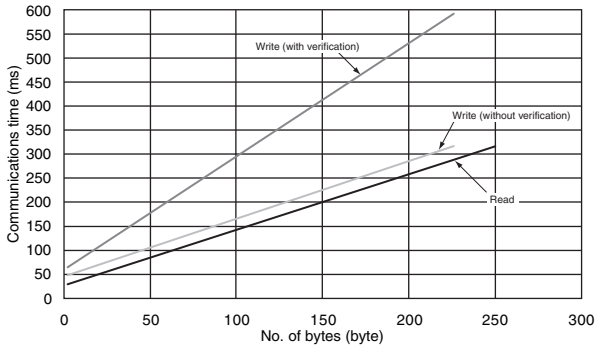

V680S-HMD6□-PNT and V680S-D8KF6□ (Communications speed setting: Normal speed)

• Communication Option: Other than FIFO Repeat (With ID code check)

Command	Communications time (ms) N: No. of bytes processed
Read	T= 0.5N + 36.1
Write (with verification)	T= 1.0N + 93.0
Write (without verification)	T= 0.5N + 65.8

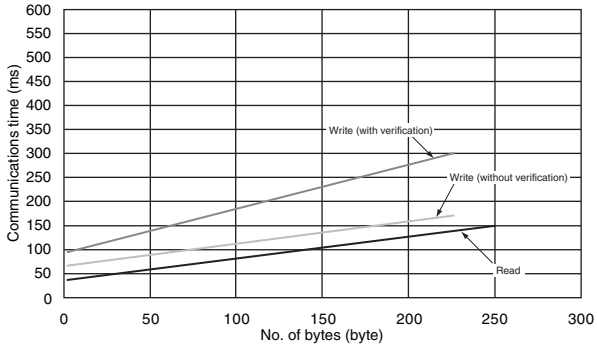

• Communication Option: FIFO Repeat (With ID code check)

Command	Communications time (ms) N: No. of bytes processed
Read	T= 0.6N + 45.8
Write (with verification)	T= 1.1N + 113.1
Write (without verification)	T= 0.6N + 80.8

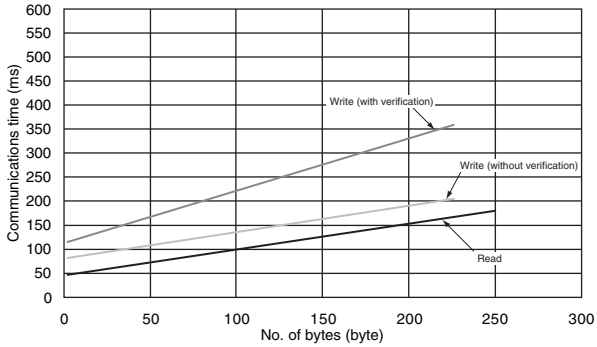

■ Travel Speed Calculations

Set the communications option to Repeat to communicate with a moving RF Tag.

The maximum speed for communicating with the RF Tag can be calculated simply using the following formula.

$$\text{Maximum speed} = \frac{\text{D (Distance traveled in communications field)}}{\text{T (Communications time)}}$$

D (Distance traveled in communications field) is calculated from the actual measurement or the communications field between the Reader/Writer and RF Tag.

CHECK! In order to ensure a margin, it is preferable that the communication time is calculated at twice.

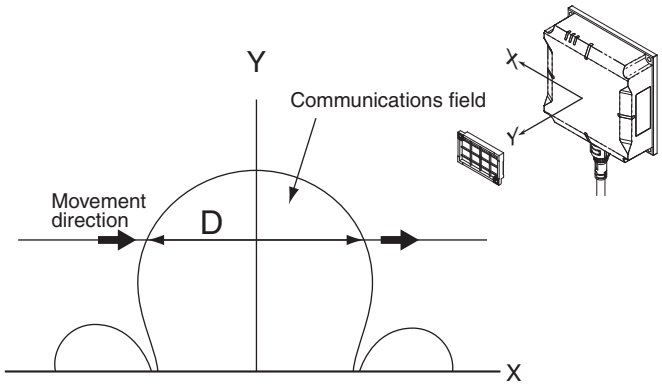

▪ Calculation Example

The following example is for reading 128 bytes with the V680S-D2KF68 and V680S-HMD66-PNT.

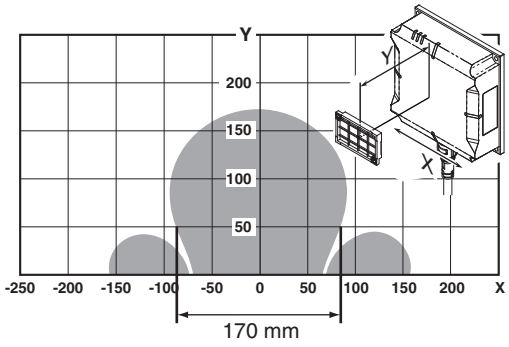

From the above chart,

Distance traveled in communications field = 170 mm when Y (communications range) is 50 mm

Communications time T = 267.8 ms (calculated from the communications time , i.e., 2 times × (0.9 × 128 bytes + 18.7))

Therefore, the maximum speed of the Tag is as follows:

$$\text{Maximum speed} = \frac{\text{D (Distance traveled in communications field)}}{\text{T (Communications time)}} = \frac{170(\text{mm})}{267.8(\text{ms})}$$

$$= 38.1 \text{ m/min}$$

Reader/Writer Installation Precautions

V680S-HMD63-PNT

■ Influence of Surrounding Metal on Reader/Writer

The Reader/Writer can be surface-mounted or it can be embedded in metal to protect it from collisions. If you embed the Reader/Writer in metal, separate it at least 80 mm from any metallic surface to prevent malfunctions. If the distance between surrounding metal and the Reader/Writer is less than 80 mm, the Reader/Writer communications range will be greatly reduced.

Do not allow the height of the metal to exceed the height of the Reader/Writer.

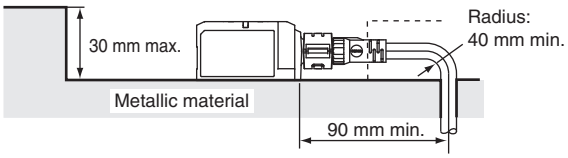

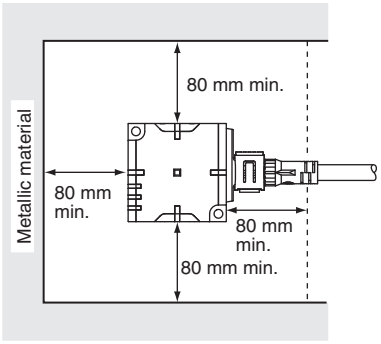

CHECK! Provide a Cable bending radius of 40 mm or more.

CHECK! The communications range will be reduced significantly if the Reader/Writer is installed closer than 80 mm to metal surfaces.

■ Mutual Interference of Reader/Writers

To prevent malfunctioning due to mutual interference when using more than one Reader/Writer, leave sufficient space between them as given in the following table.

If the distance between the Reader/Writers is too short, the read/write distances will be reduced.

RF Tag model	Mounting distance	
	Installing the Reader/Writers facing each other	Installing the Reader/Writers in parallel
V680-D1KP54T	230 mm	110 mm
V680-D1KP66T	300 mm	100 mm
V680-D1KP66MT	220 mm	100 mm
V680-D1KP66T-SP	300 mm	100 mm
V680S-D2KF67	370 mm	120 mm
V680S-D2KF67M	220 mm	100 mm
V680S-D8KF67	290 mm	120 mm
V680S-D8KF67M	240 mm	100 mm

• Installing the Reader/Writers Facing Each Other

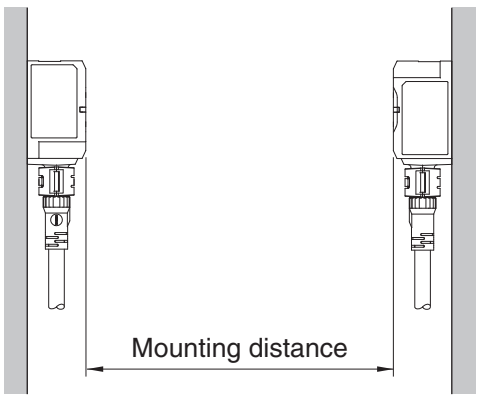

• Installing the Reader/Writers in Parallel

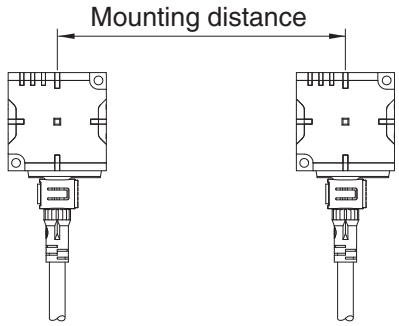

V680S-HMD64-PNT

■ Influence of Surrounding Metal on Reader/Writer

The Reader/Writer can be surface-mounted or it can be embedded in metal to protect it from collisions. If you embed the Reader/Writer in metal, separate it at least 100 mm from any metallic surface to prevent malfunctions. If the distance between surrounding metal and the Reader/Writer is less than 100 mm, the Reader/Writer communications range will be greatly reduced.

Do not allow the height of the metal to exceed the height of the Reader/Writer.

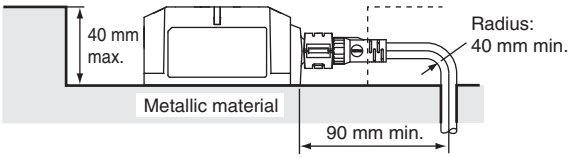

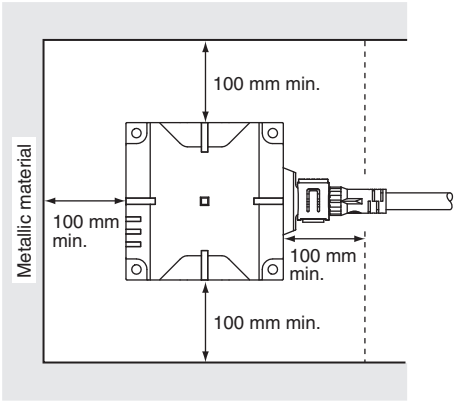

CHECK!

Provide a Cable bending radius of 40 mm or more.

CHECK!

The communications range will be reduced significantly if the Reader/Writer is installed closer than 100 mm to metal surfaces.

■ Mutual Interference of Reader/Writers

To prevent malfunctioning due to mutual interference when using more than one Reader/Writer, leave sufficient space between them as shown in the following diagrams.

If the distance between the Reader/Writers is too short, read / write distance will be reduced.

RF Tag model	Mounting distance	
	Installing the Reader/Writer facing each other	Installing the Reader/Writer in parallel
V680-D1KP54T	250 mm	125 mm
V680-D1KP66T	350 mm	150 mm
V680-D1KP66MT	250 mm	150 mm
V680-D1KP66T-SP	350 mm	150 mm
V680-D1KP58HTN	450 mm	125 mm
V680S-D2KF67	460 mm	170 mm
V680S-D2KF67M	220 mm	160 mm
V680S-D8KF67	400 mm	170 mm
V680S-D8KF67M	180 mm	160 mm
V680S-D2KF68	600 mm	180 mm
V680S-D2KF68M	380 mm	160 mm
V680S-D8KF68	600 mm	180 mm
V680S-D8KF68M	260 mm	160 mm

• Installing the Reader/Writer Facing Each Other

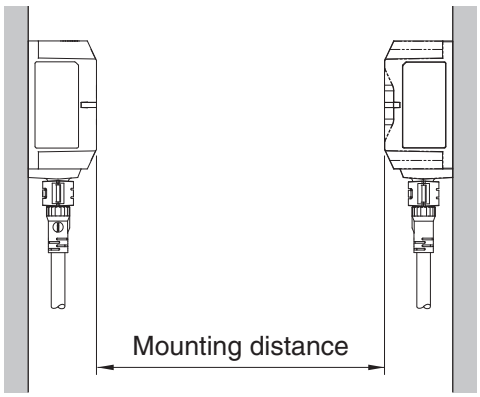

• Installing the Reader/Writer in Parallel

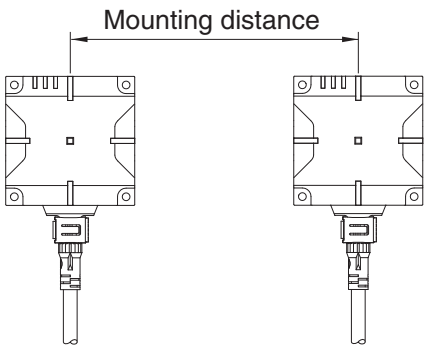

V680S-HMD66-PNT

■ Influence of Surrounding Metal on Reader/Writer

The Reader/Writer can be surface-mounted or it can be embedded in metal to protect it from collisions. If you embed the Reader/Writer in metal, separate it at least 160 mm from any metallic surface to prevent malfunctions. If the distance between surrounding metal and the Reader/Writer is less than 160 mm, the Reader/Writer communications range will be greatly reduced.

Do not allow the height of the metal to exceed the height of the Reader/Writer.

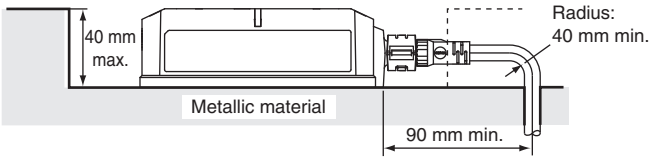

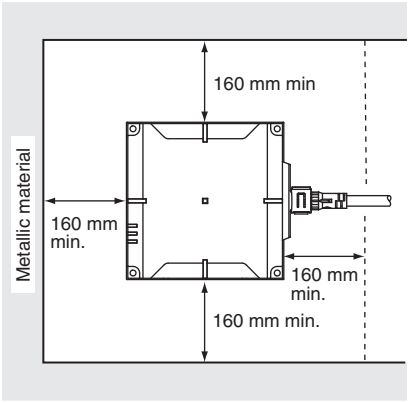

CHECK! Provide a Cable bending radius of 40 mm or more.

CHECK! The communications range will be reduced significantly if the Reader/Writer is installed closer than 160 mm to metal surfaces.

■ Mutual Interference of Reader/Writers

To prevent malfunctioning due to mutual interference when using more than one Reader/Writer, leave sufficient space between them as shown in the following diagrams.

If the distance between the Reader/Writers is too short, read / write distance will be reduced.

RF Tag model	Mounting distance	
	Installing the Reader/Writer facing each other	Installing the Reader/Writer in parallel
V680-D1KP54T	340 mm	190 mm
V680-D1KP66T	410 mm	190 mm
V680-D1KP66MT	300 mm	180 mm
V680-D1KP66T-SP	410 mm	190 mm
V680-D1KP58HTN	500 mm	170 mm
V680S-D2KF67	460 mm	230 mm
V680S-D2KF67M	300 mm	230 mm
V680S-D8KF67	580 mm	250 mm
V680S-D8KF67M	280 mm	220 mm
V680S-D2KF68	750 mm	220 mm
V680S-D2KF68M	420 mm	220 mm
V680S-D8KF68	600 mm	240 mm
V680S-D8KF68M	360 mm	220 mm

- Reader/Writers Installed Facing Each Other

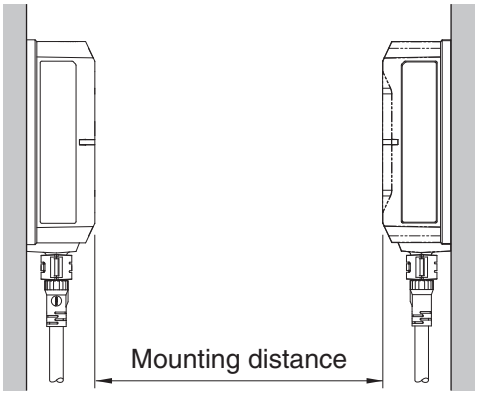

- Reader/Writers Installed in Parallel

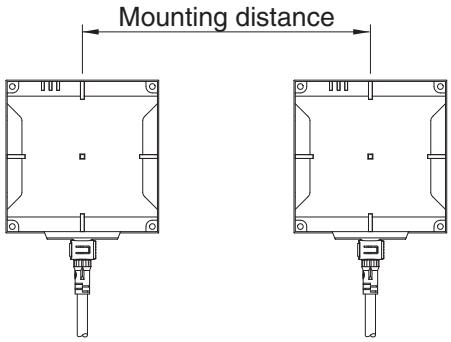

RF Tag Installation Precautions

V680-D1KP54T

■ Effect of Metal behind RF Tags

The communications range will decrease if there is metal at the back of the V680-D1KP54T RF Tag. The V700-A80 Attachment is 8 mm thick. If the RF Tag is mounted on metallic material, use a non-metallic spacer (e.g., plastic or resin). The following graphs show the relationship between the distance from the RF Tag to the metallic surface and the communications range.

The V700-A80 Attachment is 8 mm thick.

● V680S-HMD63-PNT and V680-D1KP54T

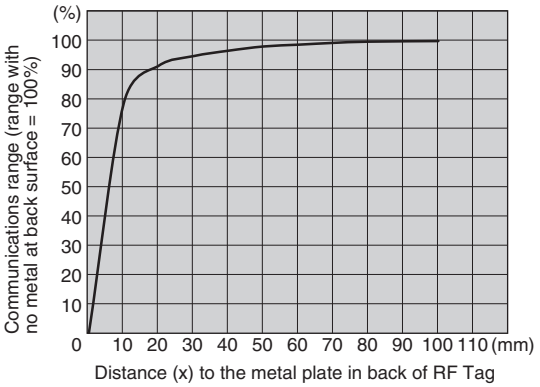

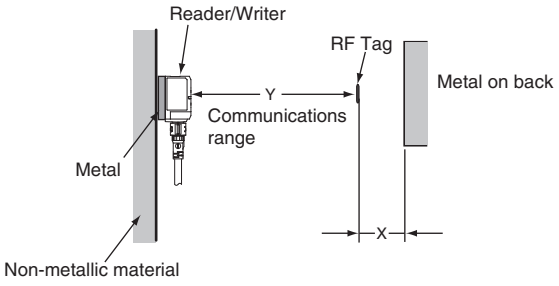

●V680S-HMD64-PNT and V680-D1KP54T

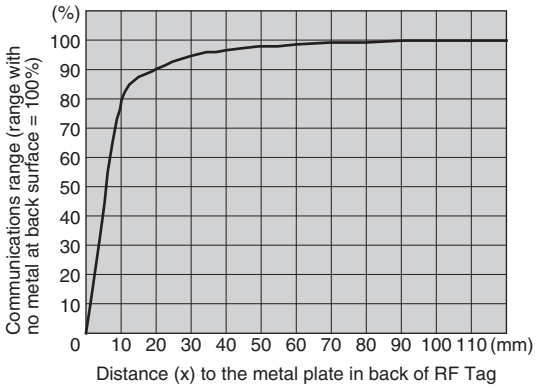

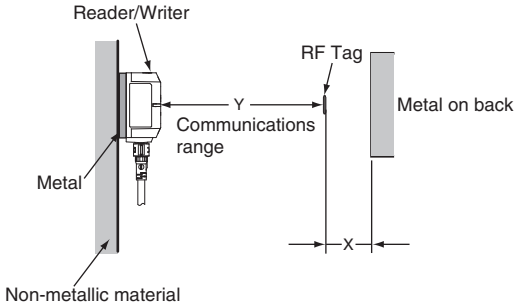

●V680S-HMD66-PNT and V680-D1KP54T

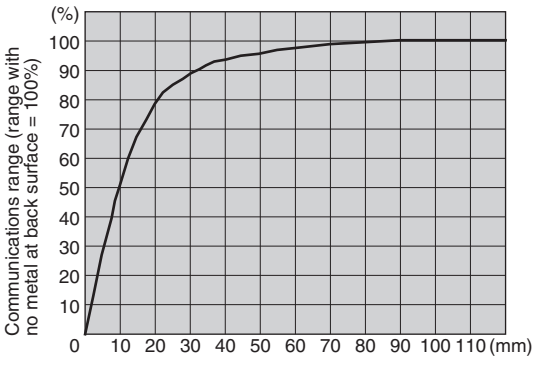

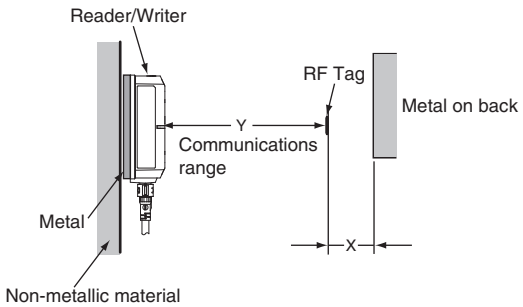

■ Mutual Interference of RF Tags

If you use more than one RF Tag, separate them by at least the interval shown below to prevent malfunctions due to mutual interference.

If the distance between the RF tags is too short, read / write distance will be reduced.

▪ V680S-HMD63-PNT Reader/Writer

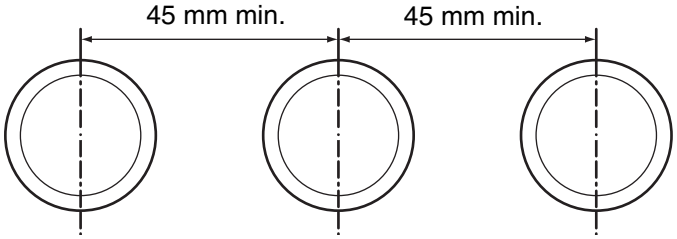

▪ V680S-HMD64-PNT Reader/Writer

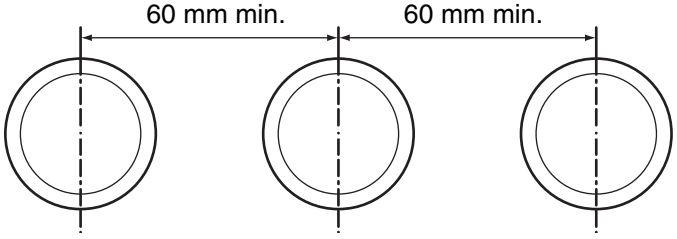

▪ V680S-HMD66-PNT Reader/Writer

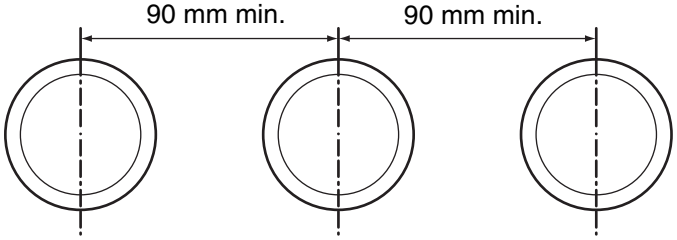

■ Influence of Inclination

Install the Reader/Writer and RF Tags so that the Reader/Writer and RF Tags are as parallel to each other as possible.

Communications will be possible even if the Reader/Writer and RF Tags are not parallel to each other; however, the communications range is affected by the inclination between them as shown in the following graphs.

▪ Rates of Change in Communications Range for Inclination of V680-D1KP54T

	RF Tag inclination (θ°)									
	0	10	20	30	40	50	60	70	80	90
V680S-HMD63-PNT and V680-D1KP66T	0%	0%	-2%	-5%	-9%	-14%	-21%	-32%	-49%	---
V680S-HMD64-PNT and V680-D1KP54T	0%	-1%	-3%	-6%	-12%	-19%	-29%	-43%	-70	---
V680S-HMD66-PNT and V680-D1KP54T	0%	-1%	-3%	-6%	-11%	-18%	-27%	-42%	-67	---

▪ Measurement Conditions

• V680S-HMD63-PNT and V680-D1KP54T

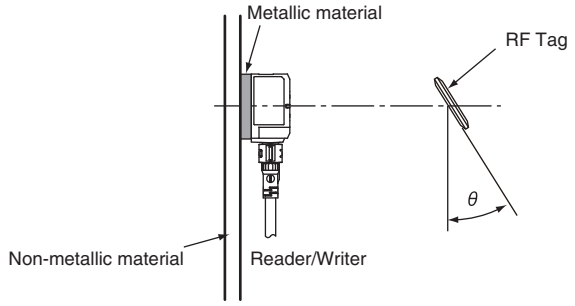

• V680S-HMD64-PNT and V680-D1KP54T

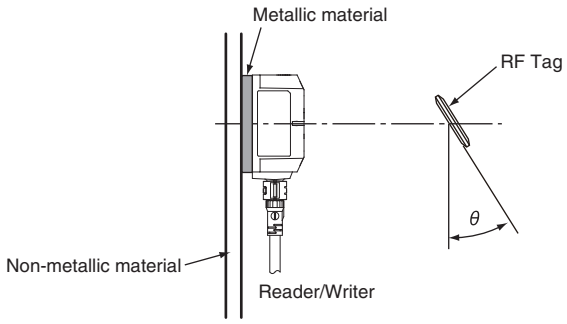

• V680S-HMD66-PNT and V680-D1KP54T

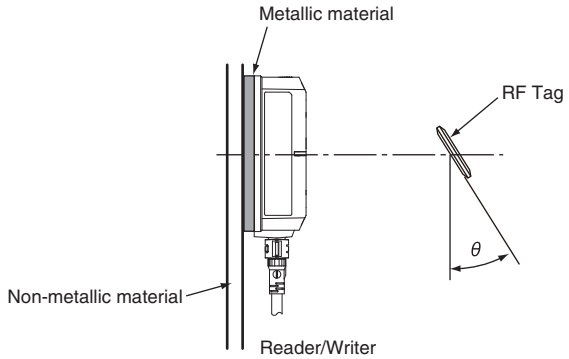

V680-D1KP66T

■ Influence of Metal at Back Surface

The communications range will decrease if there is metal at the back of the V680-D1KP66T RF Tag. If the RF Tag is mounted on metallic material, use the V600-A86 Attachment (sold separately) or insert a non-metallic spacer (e.g., plastic or resin). The following graphs show the relationship between the distance from the RF Tag to the metallic surface and the communications range.

You can also use more than one Attachment (10 mm).

Installation with the V600-A86 Attachment

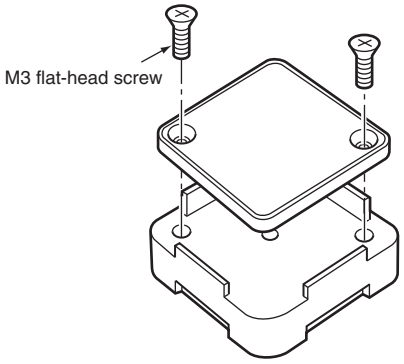

Note: Orient the RF Tag so that the mounting holes are aligned.

● V680S-HMD63-PNT and V680-D1KP66T

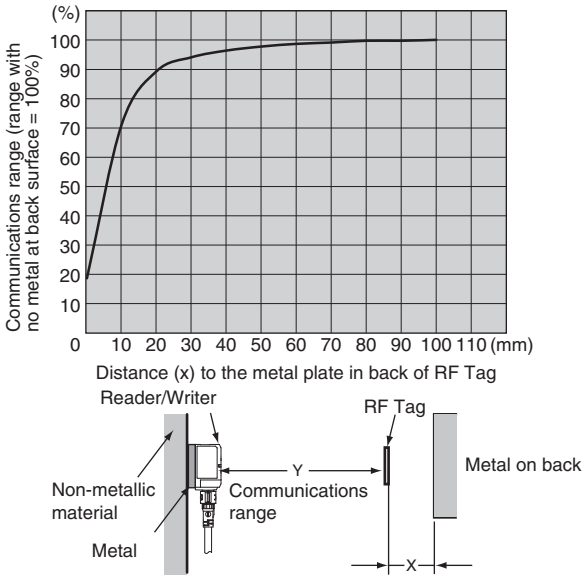

● V680S-HMD64-PNT and V680-D1KP66T

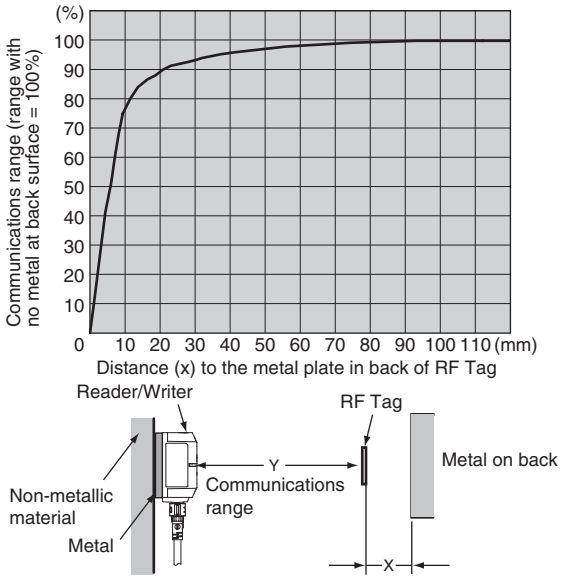

● V680S-HMD66-PNT and V680-D1KP66T

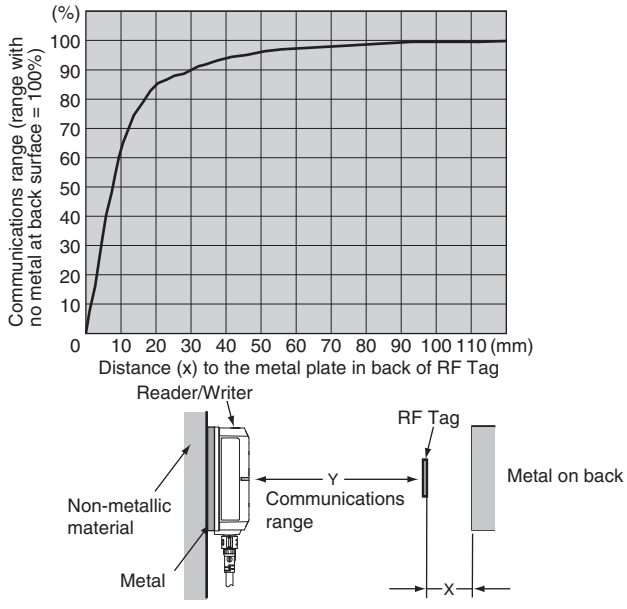

■ Mutual Interference of RF Tags

If you use more than one RF Tag, separate them by at least the interval shown below to prevent malfunctions due to mutual interference.

If the distance between the RF tags is too short, read / write distance will be reduced.

▪ V680S-HMD63-PNT Reader/Writer

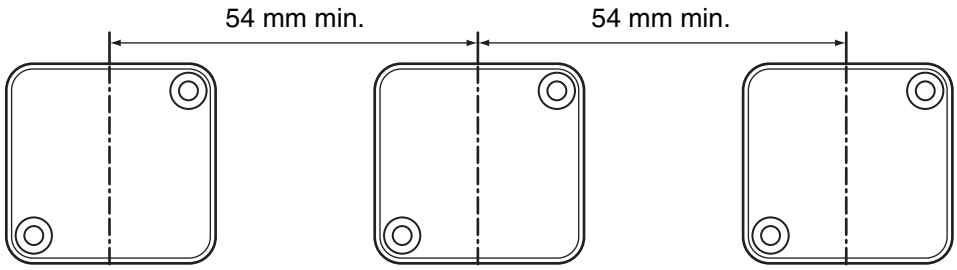

▪ V680S-HMD64-PNT Reader/Writer

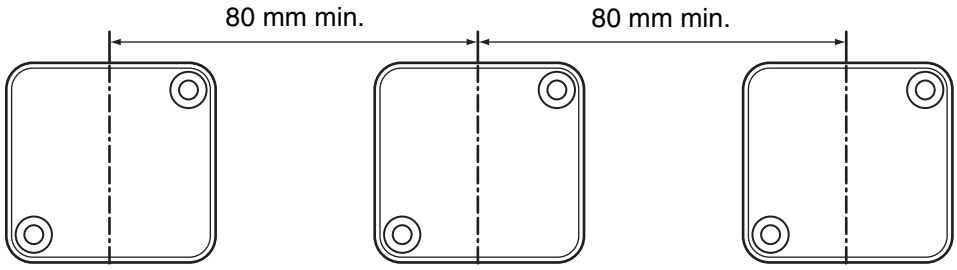

▪ V680S-HMD66-PNT Reader/Writer

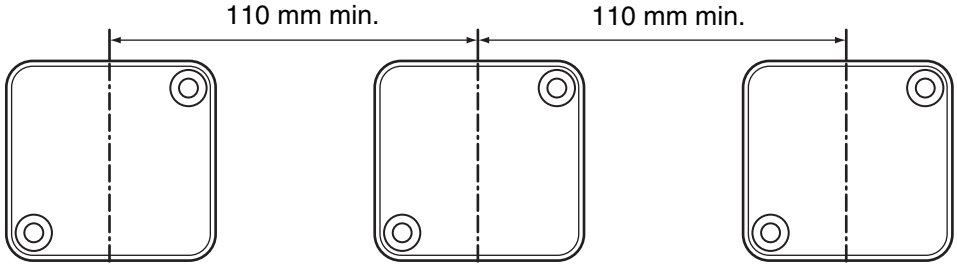

■ Influence of Inclination

Install the Reader/Writer and RF Tags so that the Reader/Writer and RF Tags are as parallel to each other as possible.

Communications will be possible even if the Reader/Writer and RF Tags are not parallel to each other; however, the communications range is affected by the inclination between them as shown in the following graphs.

▪ Rates of Change in Communications Range for Inclination of V680-D1KP66T

	RF Tag inclination (θ°)									
	0	10	20	30	40	50	60	70	80	90
V680S-HMD63-PNT and V680-D1KP66T-SP	0%	-1%	-2%	-4%	-8%	-13%	-19%	-29%	-44%	---
V680S-HMD64-PNT and V680-D1KP66T	0%	-1%	-3%	-5%	-9%	-14%	-21%	-32%	-48	---
V680S-HMD66-PNT and V680-D1KP66T	0%	-1%	-3%	-6%	-10%	-17%	-27%	-41%	-62	---

▪ Measurement Conditions

• V680S-HMD63-PNT and V680-D1KP66T

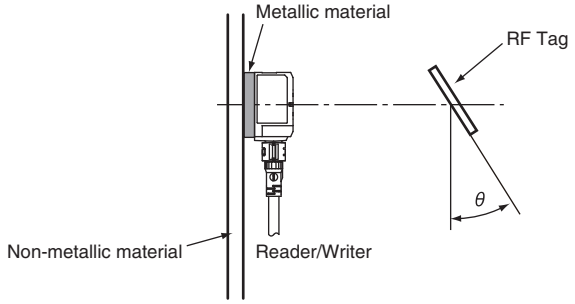

• V680S-HMD64-PNT and V680-D1KP66T

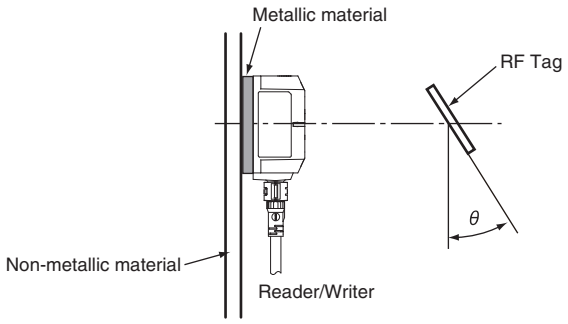

• V680S-HMD66-PNT and V680-D1KP66T

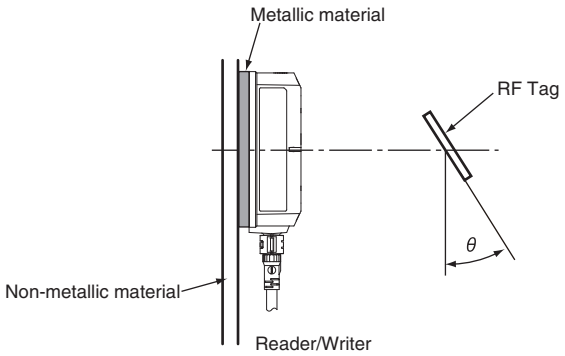

V680-D1KP66MT

■ Influence of Surrounding Metal

The V680-D1KP66MT can be surface-mounted or it can be embedded in metal. However, do not allow the height of the metal to exceed the height of the V680-D1KP66MT.

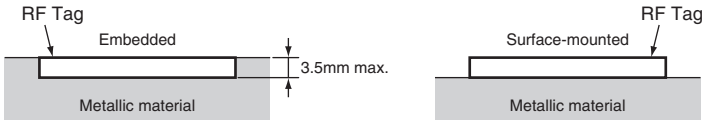

● V680S-HMD63-PNT and V680-D1KP66MT

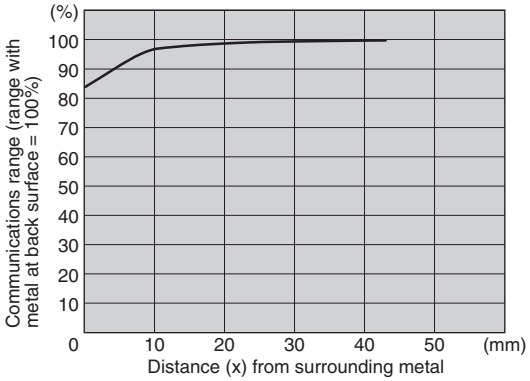

●V680S-HMD64-PNT and V680-D1KP66MT

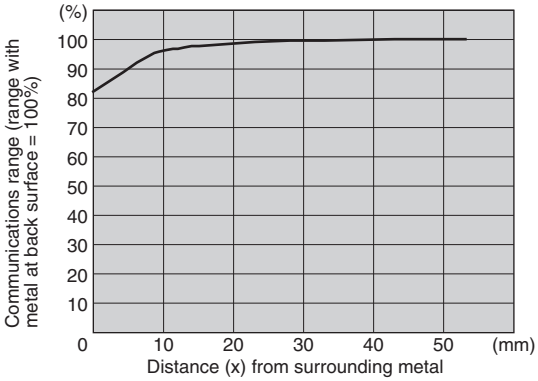

●V680S-HMD66-PNT and V680-D1KP66MT

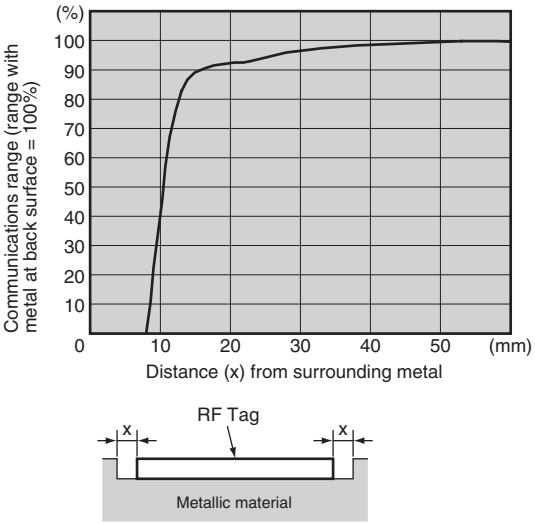

■ Mutual Interference of RF Tags

If you use more than one RF Tag, separate them by at least the interval shown below to prevent malfunctions due to mutual interference.

If the distance between the RF tags is too short, read / write distance will be reduced.

▪ V680S-HMD63-PNT Reader/Writer

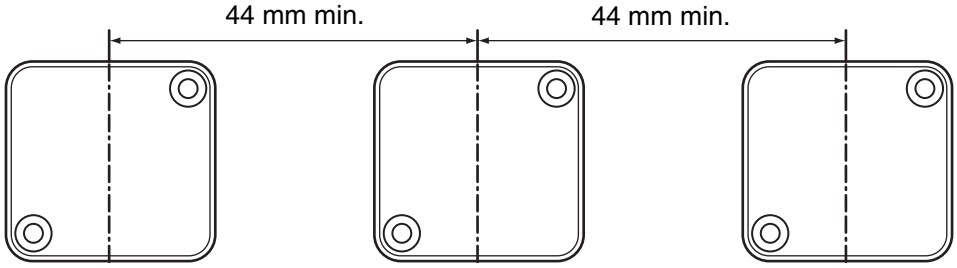

▪ V680S-HMD64-PNT Reader/Writer

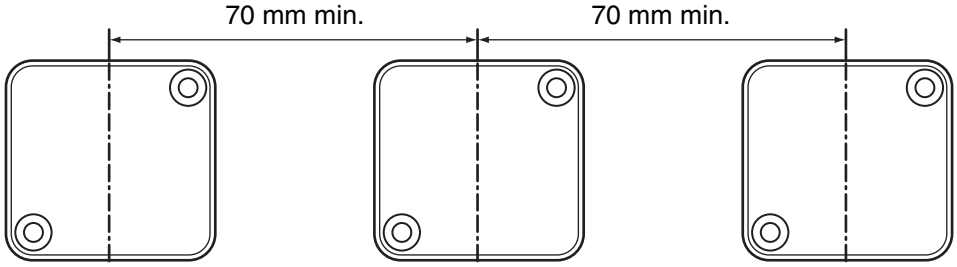

▪ V680S-HMD66-PNT Reader/Writer

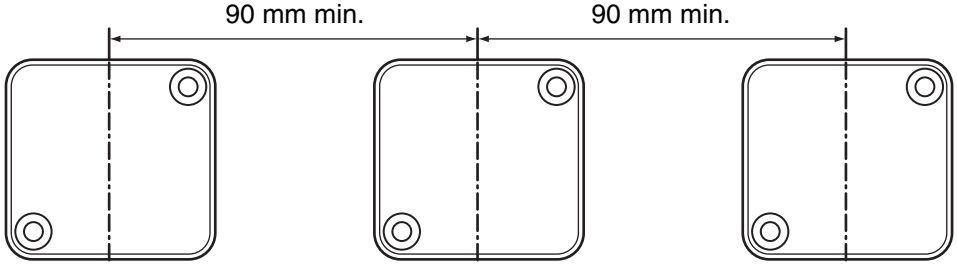

■ Influence of Inclination

Install the Reader/Writer and RF Tags so that the Reader/Writer and RF Tags are as parallel to each other as possible.

Communications will be possible even if the Reader/Writer and RF Tags are not parallel to each other; however, the communications range is affected by the inclination between them as shown in the following graphs.

▪ Rates of Change in Communications Range for Inclination of V680-D1KP66MT

	RF Tag inclination (θ°)									
	0	10	20	30	40	50	60	70	80	90
V680S-HMD63-PNT and V680-D1KP66MT (Metal at back surface: Steel)	0%	-1%	-6%	-9%	-15%	-23%	-36%	-67%	---	---
V680S-HMD64-PNT and V680-D1KP66MT (Metal at back surface: Steel)	0%	0%	-2%	-5%	-10%	-18%	-31%	-59%	---	---
V680S-HMD66-PNT and V680-D1KP66MT (Metal at back surface: Steel)	0%	0%	-3%	-7%	-16%	-28%	-49%	---	---	---

▪ Measurement Conditions

• V680S-HMD63-PNT and V680-D1KP66MT
(Metal at Back Surface: Steel)

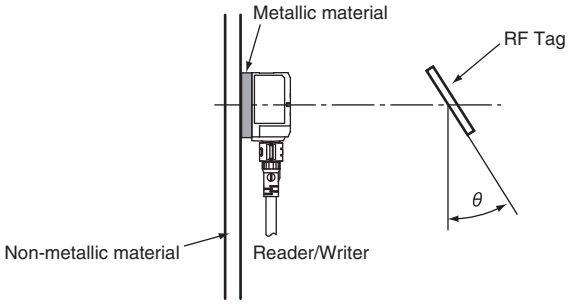

• V680S-HMD64-PNT and V680-D1KP66MT
(Metal at Back Surface: Steel)

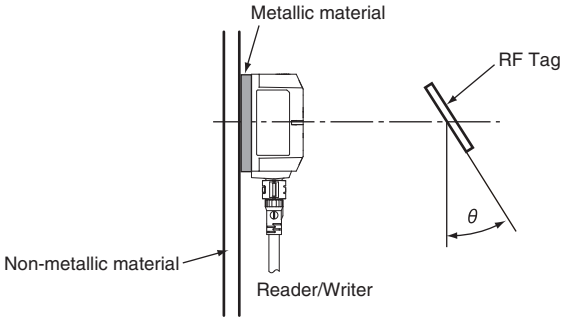

• V680S-HMD66-PNT and V680-D1KP66MT
(Metal at Back Surface: Steel)

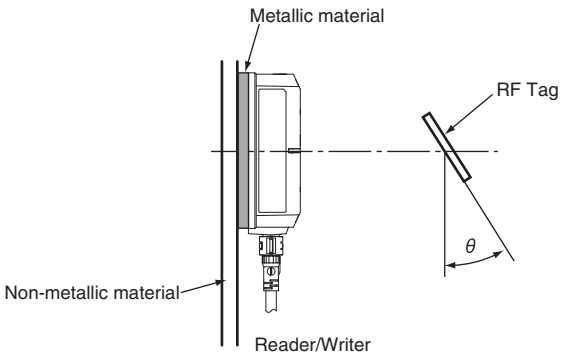

V680-D1KP66T-SP

■ Influence of Metal at Back Surface

The communications range will decrease if there is metal at the back of the V680-D1KP66T-SP RF Tag. If the RF Tag is mounted on metallic material, use a non-metallic spacer (e.g., plastic or resin). The following graphs show the relationship between the distance from the RF Tag to the metallic surface and the communications range.

●V680S-HMD63-PNT and V680-D1KP66T-SP

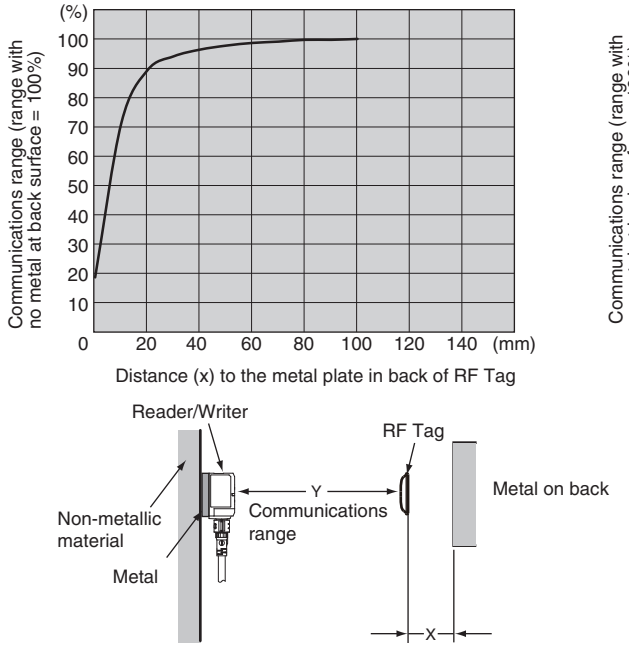

●V680S-HMD64-PNT and V680-D1KP66T-SP

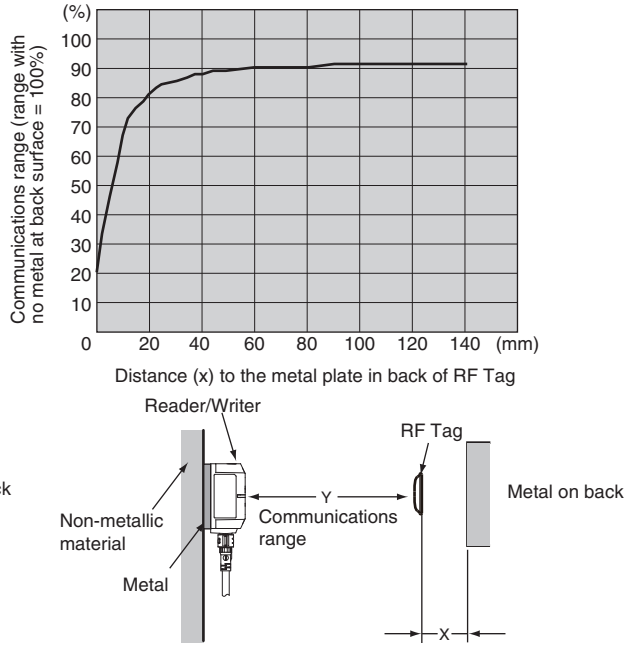

●V680S-HMD66-PNT and V680-D1KP66T-SP

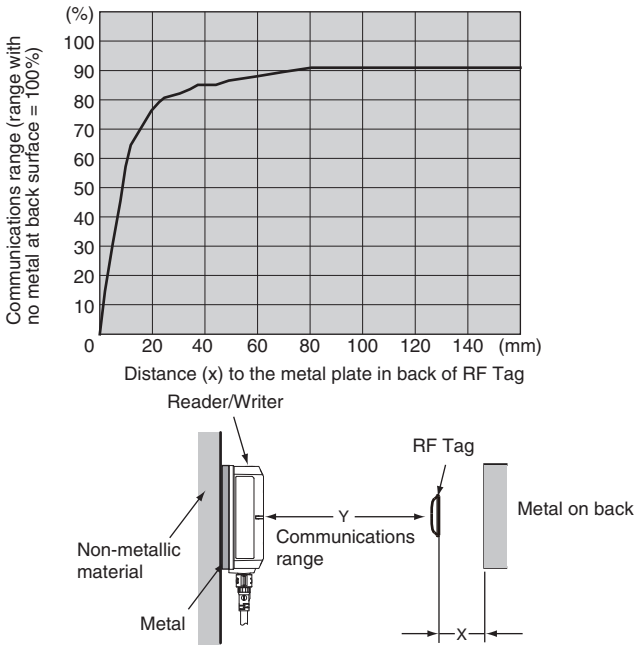

■ Mutual Interference of RF Tags

If you use more than one RF Tag, separate them by at least the interval shown below to prevent malfunctions due to mutual interference.

If the distance between the RF tags is too short, read / write distance will be reduced.

▪ V680S-HMD63-PNT Reader/Writer

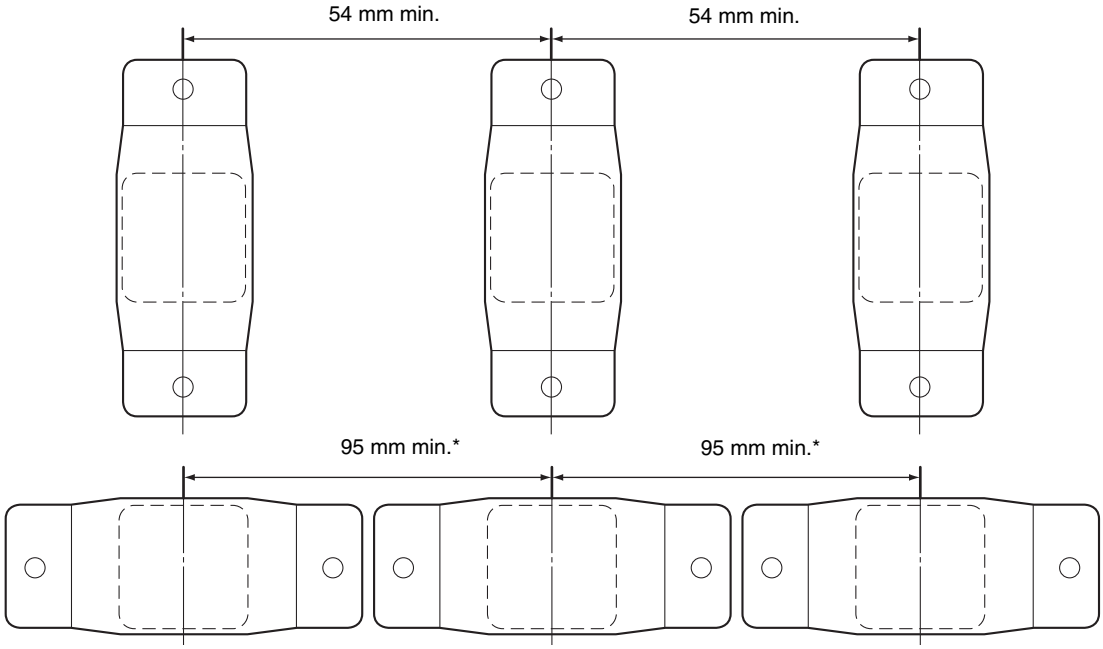

▪ V680S-HMD64-PNT Reader/Writer

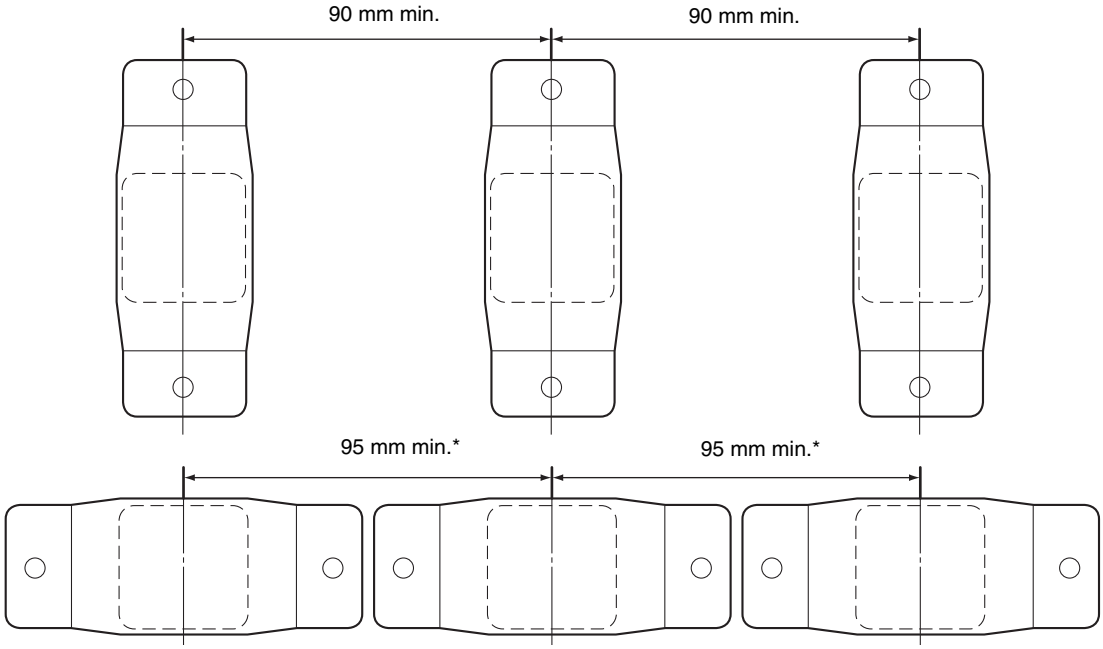

* This is required for the V680-D1KP66T-SP exterior dimension (Length: 95 mm).

V680S-HMD66-PNT Reader/Writer

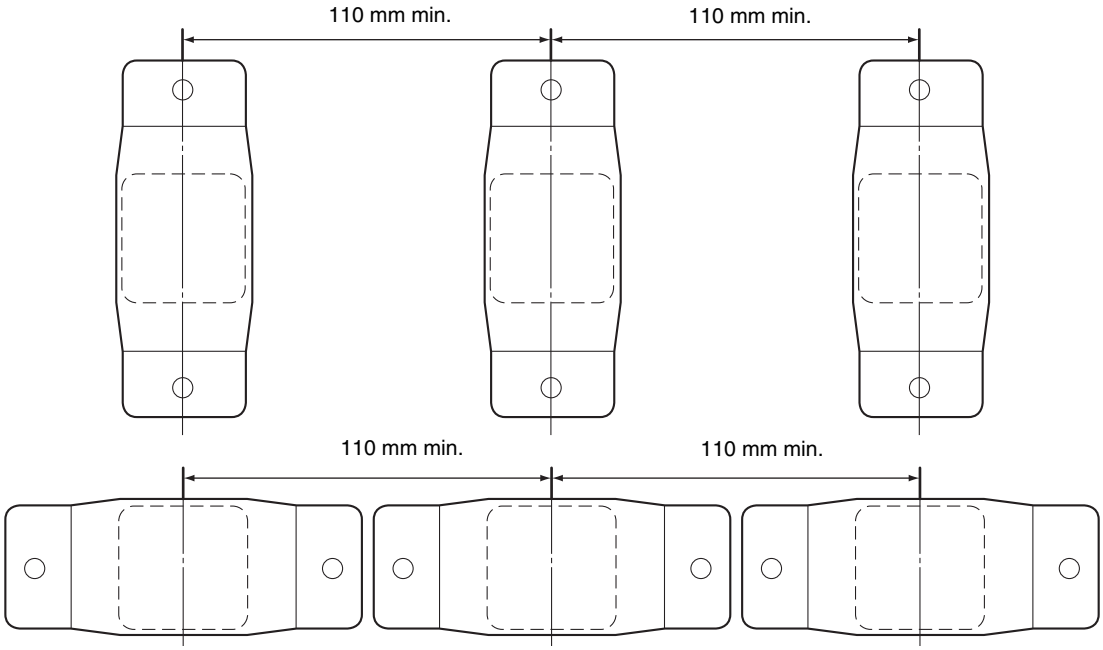

■ Influence of Inclination

Install the Reader/Writer and RF Tags so that the Reader/Writer and RF Tags are as parallel to each other as possible.

Communications will be possible even if the Reader/Writer and RF Tags are not parallel to each other; however, the communications range is affected by the inclination between them as shown in the following graphs.

▪ Rates of Change in Communications Range for Inclination of V680-D1KP66T-SP

	RF Tag inclination (θ°)									
	0	10	20	30	40	50	60	70	80	90
V680S-HMD63-PNT and V680-D1KP66T-SP	0%	-1%	-2%	-4%	-8%	-13%	-19%	-29%	-44%	---
V680S-HMD64-PNT and V680-D1KP66T-SP	0%	-1%	-3%	-5%	-9%	-14%	-21%	-32%	-48%	---
V680S-HMD66-PNT and V680-D1KP66T-SP	0%	-1%	-3%	-6%	-10%	-17%	-27%	-41%	-62%	---

▪ Measurement Conditions

• V680S-HMD63-PNT and V680-D1KP66T-SP

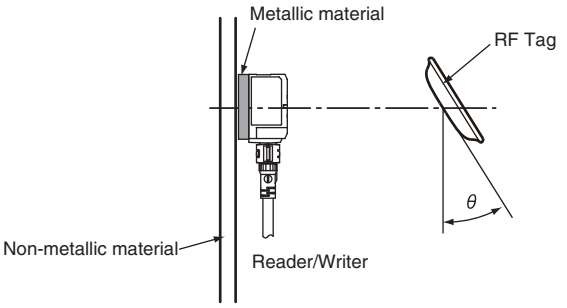

• V680S-HMD64-PNT and V680-D1KP66T-SP

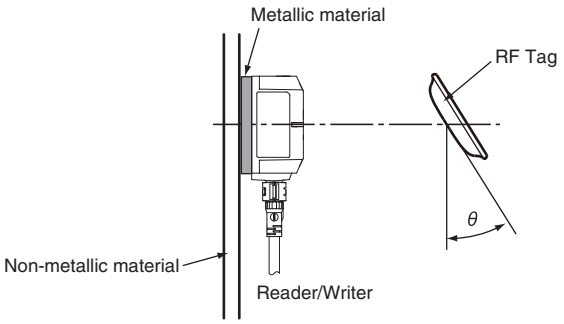

• V680S-HMD66-PNT and V680-D1KP66T-SP

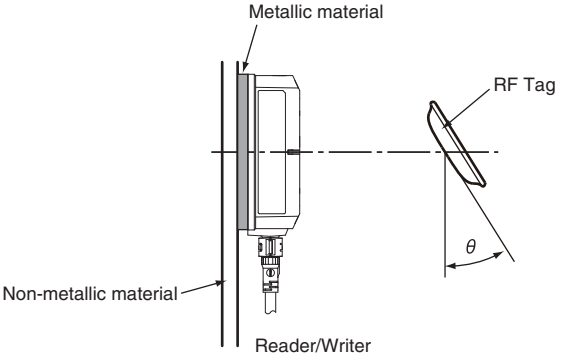

V680-D1KP58HTN

■ Influence of Metal at Back Surface

You must consider the influence of the mounting location when mounting RF Tags.
The communications range of an RF Tag may be reduced by the influence of the surrounding objects. The amount that the communications range decreases will depend on the materials and shapes of the surrounding objects. As reference data, this section shows the influence of metal at the back surface of an RF Tag.

▪ Influence of Metal Objects

The following figure shows the percentage of decrease in the communications range when there is a metal object at the back surface of an RF Tag.
The X axis gives the distance between the RF Tag and a metal plate. The Y axis shows the relative communications range taking the communications range with no metal plate as 100% (i.e., it shows the percentage of decrease in the communications range).

●V680S-HMD64-PNT and V680-D1KP58HTN

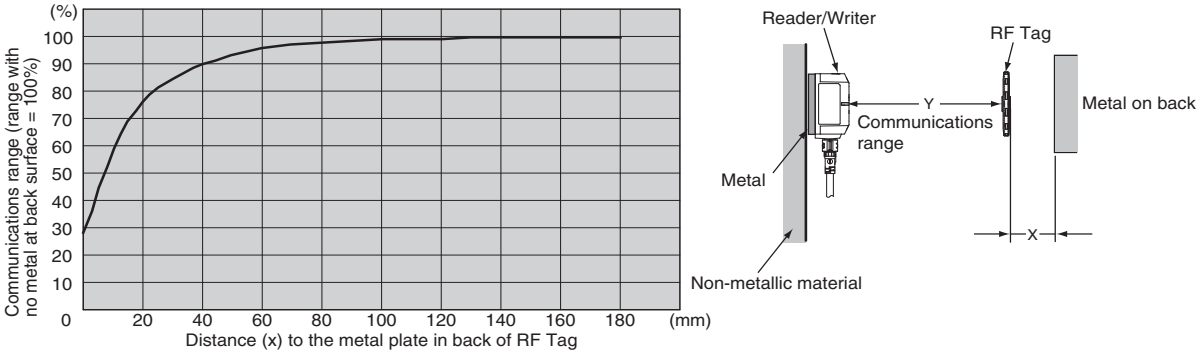

●V680S-HMD66-PNT and V680-D1KP58HTN

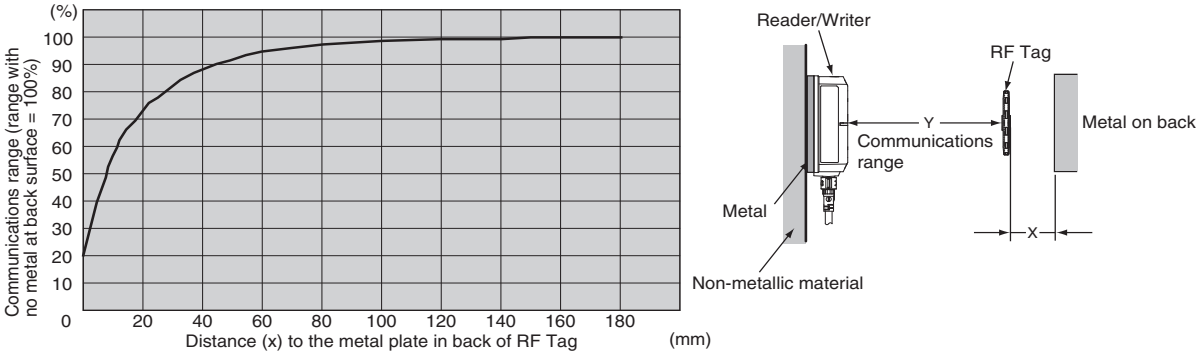

Material: Steel (thickness: 1.5 mm)
Shape: 295 × 295 mm

■ Mutual Interference of RF Tags

If you use more than one RF Tag, separate them by at least the interval shown below to prevent malfunctions due to mutual interference.

If the distance between the RF tags is too short, read / write distance will be reduced.

▪ V680S-HMD64-PNT Reader/Writer

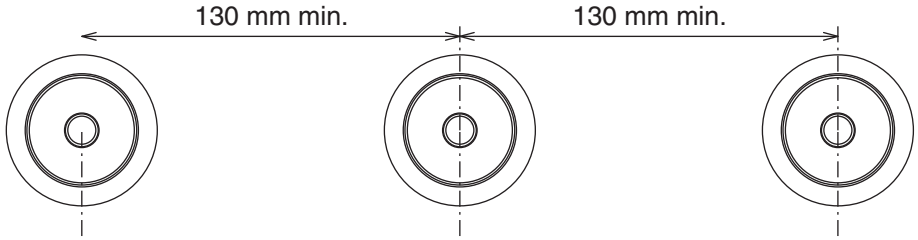

▪ V680S-HMD66-PNT Reader/Writer

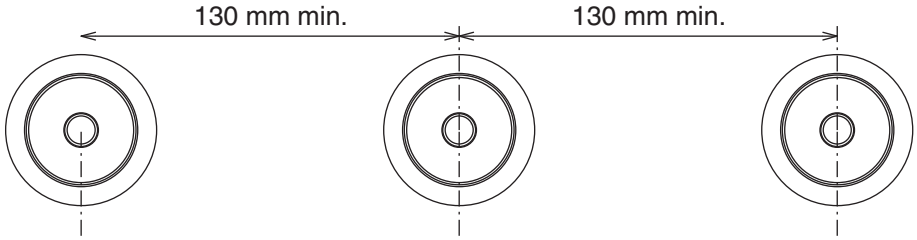

■ Influence of Inclination

The maximum communications range is achieved when the RF Tags are mounted so that the surfaces of the RF Tags are parallel with the surface of the Reader/Writer. If the RF Tags are mounted at an angle, the communications range will decrease. You must consider the influence of the inclination of the RF Tags when mounting RF Tags.

As reference data, this section shows the decrease in the communications range due to RF Tag inclination.

The X axis gives the angle with 0° which indicates that the RF Tag and Reader/Writer surfaces are parallel to each other. The Y axis shows the relative communications range taking the communications range at 0° as 100% (i.e., it shows the percentage of decrease in the communications range).

▪ Rates of Change in Communications Range for Inclination of V680-D1KP58HTN

	RF Tag inclination (θ°)									
	0	10	20	30	40	50	60	70	80	90
V680S-HMD64-PNT and V680-D1KP58HTN	0%	-1%	-3%	-5%	-8%	-14%	-22%	-32%	-35%	---
V680S-HMD66-PNT and V680-D1KP58HTN	0%	-1%	-2%	-4%	-7%	-11%	-17%	-27%	-44%	---

▪ Measurement Conditions

• V680S-HMD64-PNT and V680-D1KP58HTN

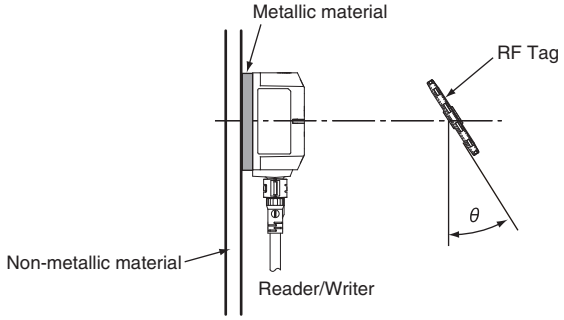

• V680S-HMD66-PNT and V680-D1KP58HTN

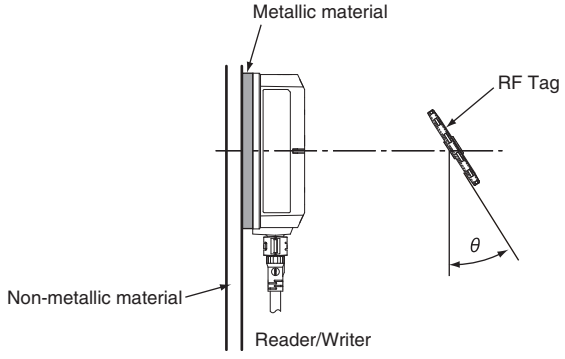

V680S-D2KF67

■ Influence of Metal at Back Surface of RF Tags

The communications range will decrease if there is metal at the back of the V680S-D2KF67 RF Tag. If the RF Tag is mounted on metallic material, use a non-metallic spacer (e.g., plastic or resin). The following graphs show the relationship between the distance from the RF Tag to the metallic surface and the communications range.

●V680S-HMD63-PNT and V680S-D2KF67

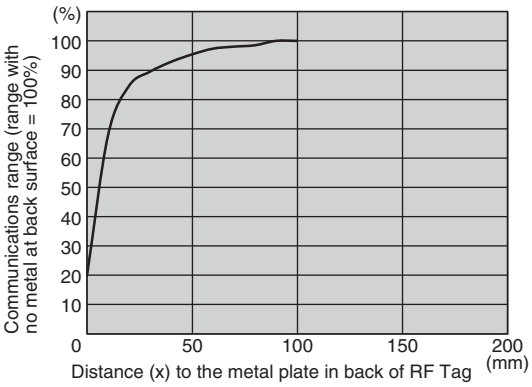

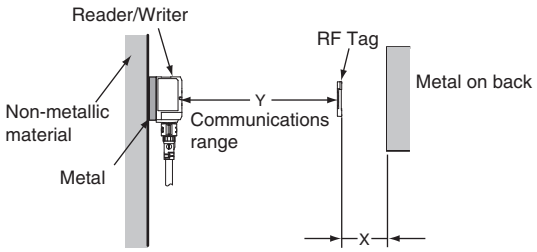

●V680S-HMD64-PNT and V680S-D2KF67

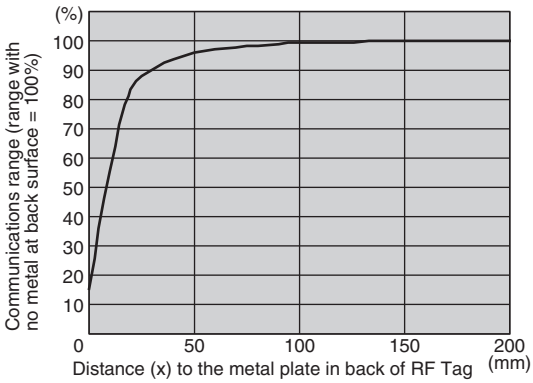

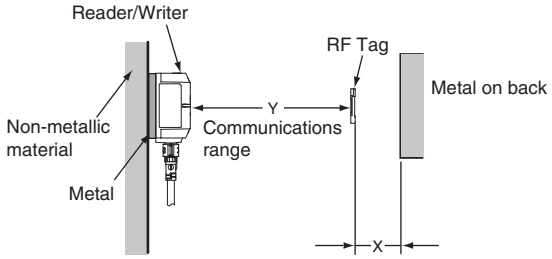

●V680S-HMD66-PNT and V680S-D2KF67

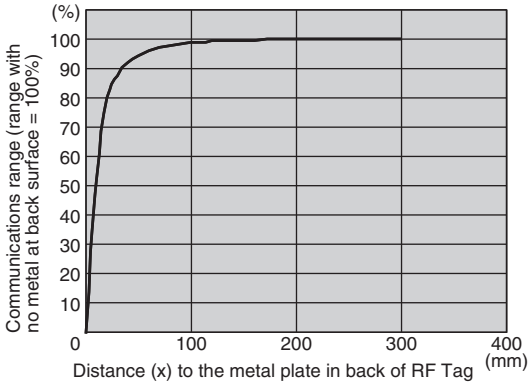

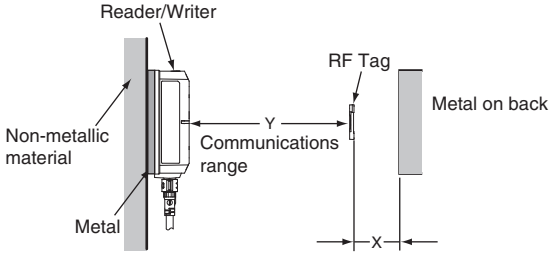

■ Mutual Interference of RF Tags

If you use more than one RF Tag, separate them by at least the interval shown below to prevent malfunctions due to mutual interference.

If the distance between the RF tags is too short, read / write distance will be reduced.

▪ V680S-HMD63-PNT Reader/Writer

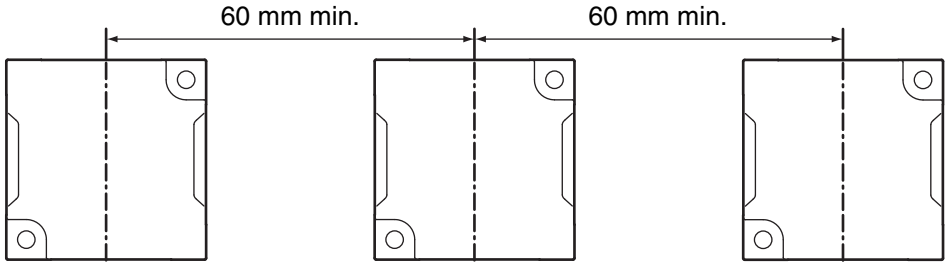

▪ V680S-HMD64-PNT Reader/Writer

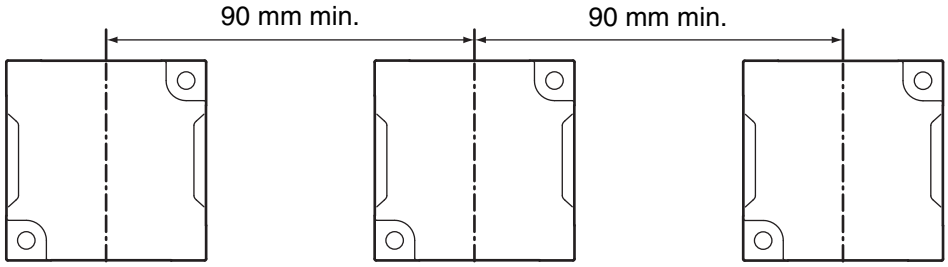

▪ V680S-HMD66-PNT Reader/Writer

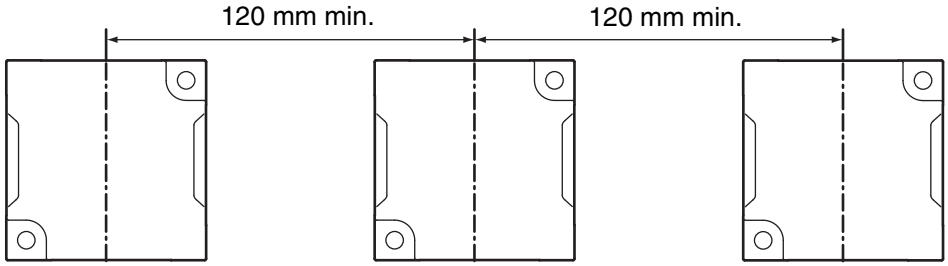

■ Influence of Inclination

Install the Reader/Writer and RF Tags so that the Reader/Writer and RF Tags are as parallel to each other as possible.

Communications will be possible even if the Reader/Writer and RF Tags are not parallel to each other; however, the communications range is affected by the inclination between them as shown in the following graphs.

▪ Rates of Change in Communications Range for Inclination of V680S-D2KF67

	RF Tag inclination (θ°)									
	0	10	20	30	40	50	60	70	80	90
V680S-HMD63-PNT and V680S-D2KF67	0%	-1%	-2%	-4%	-8%	-13%	-20%	-29%	-44%	---
V680S-HMD64-PNT and V680S-D2KF67	0%	-1%	-3%	-5%	-8%	-13%	-19%	-27%	-38%	---
V680S-HMD66-PNT and V680S-D2KF67	0%	-1%	-2%	-4%	-8%	-13%	-19%	-29%	-43%	---

▪ Measurement Conditions

• V680S-HMD63-PNT and V680S-D2KF67

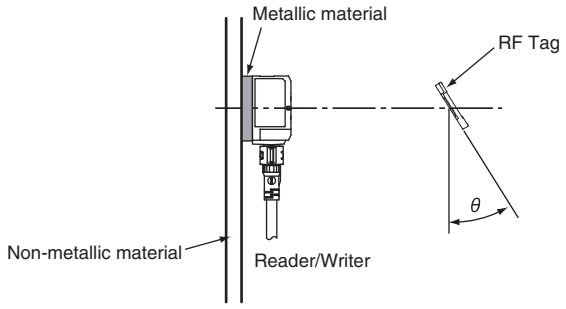

• V680S-HMD64-PNT and V680S-D2KF67

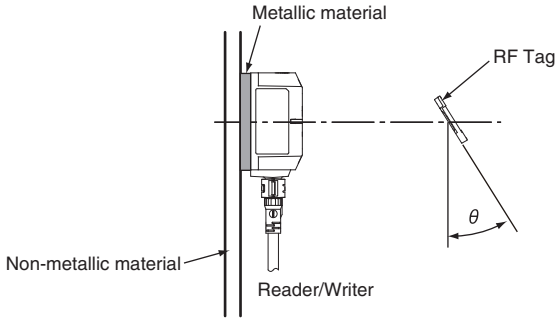

• V680S-HMD66-PNT and V680S-D2KF67

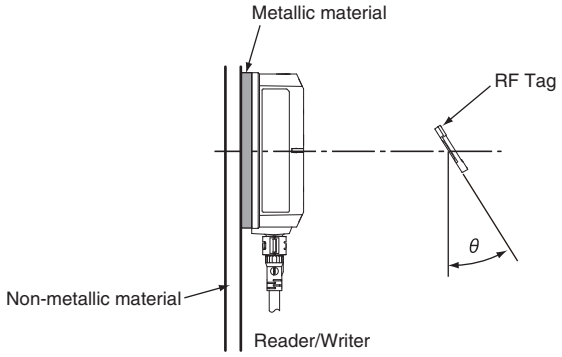

V680S-D2KF67M

■ Influence of Surrounding Metal

The V680S-D2KF67M can be surface-mounted or it can be embedded in metal. However, do not allow the height of the metal to exceed the height of the V680S-D2KF67M.

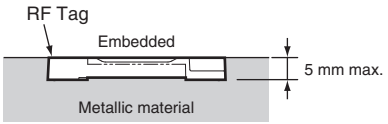

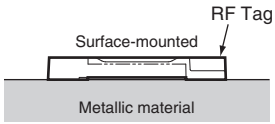

●V680S-HMD63-PNT and V680S-D2KF67M

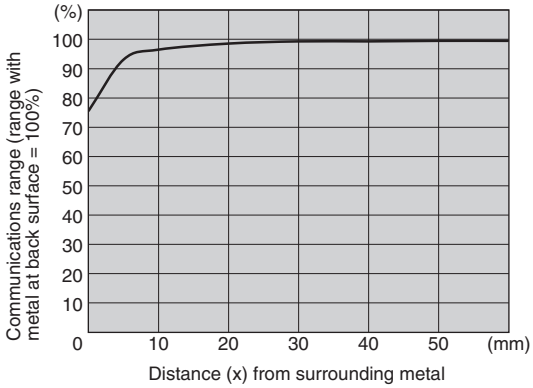

●V680S-HMD64-PNT and V680S-D2KF67M

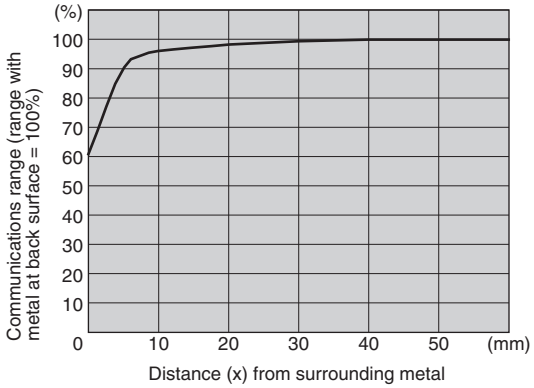

●V680S-HMD66-PNT and V680S-D2KF67M

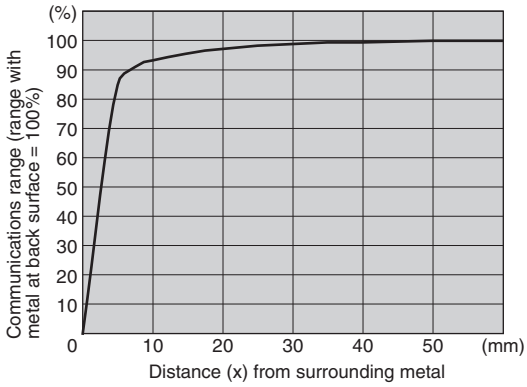

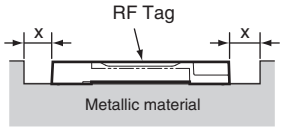

■ Mutual Interference of RF Tags

If you use more than one RF Tag, separate them by at least the interval shown below to prevent malfunctions due to mutual interference.

If the distance between the RF tags is too short, read / write distance will be reduced.

▪ V680S-HMD63-PNT Reader/Writer

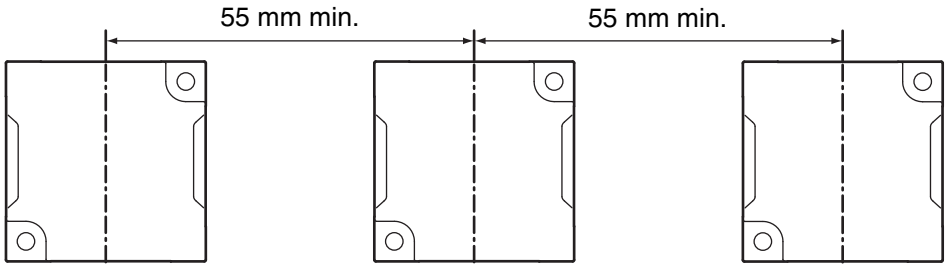

▪ V680S-HMD64-PNT Reader/Writer

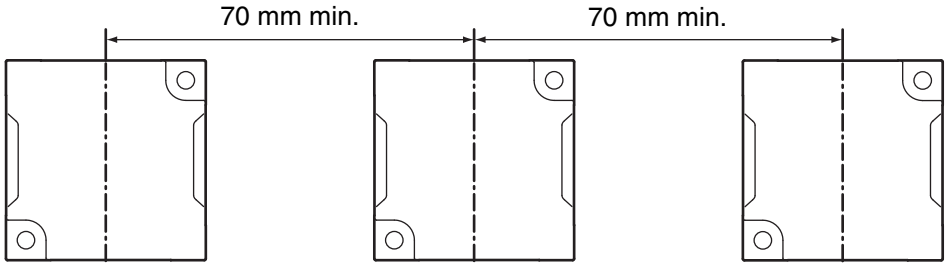

▪ V680S-HMD66-PNT Reader/Writer

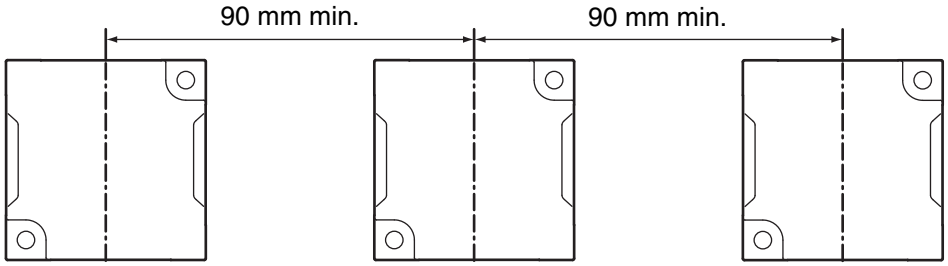

■ Influence of Inclination

Install the Reader/Writer and RF Tags so that the Reader/Writer and RF Tags are as parallel to each other as possible.

Communications will be possible even if the Reader/Writer and RF Tags are not parallel to each other; however, the communications range is affected by the inclination between them as shown in the following graphs.

▪ Rates of Change in Communications Range for Inclination of V680S-D2KF67M

	RF Tag inclination (θ°)									
	0	10	20	30	40	50	60	70	80	90
V680S-HMD63-PNT and V680S-D2KF67M (Metal at back surface: Steel)	0%	-1%	-4%	-8%	-15%	-25%	-50%	---	---	---
V680S-HMD64-PNT and V680S-D2KF67M (Metal at back surface: Steel)	0%	-1%	-3%	-7%	-12%	-21%	-37%	---	---	---
V680S-HMD66-PNT and V680S-D2KF67M (Metal at back surface: Steel)	0%	-1%	-4%	-9%	-18%	-33%	---	---	---	---

▪ Measurement Conditions

• V680S-HMD63-PNT and V680S-D2KF67M (Metal at Back Surface: Steel)

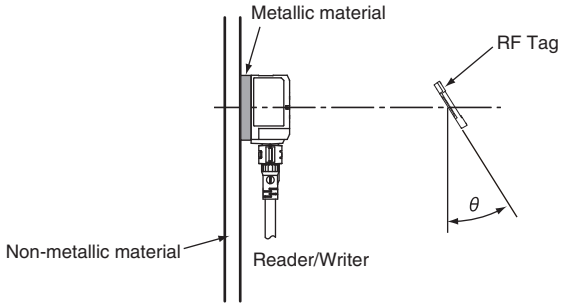

• V680S-HMD64-PNT and V680S-D2KF67M (Metal at Back Surface: Steel)

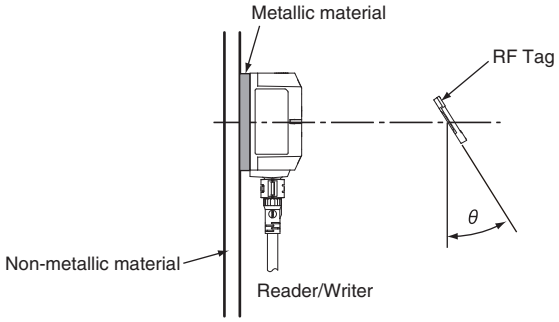

• V680S-HMD66-PNT and V680S-D2KF67M (Metal at Back Surface: Steel)

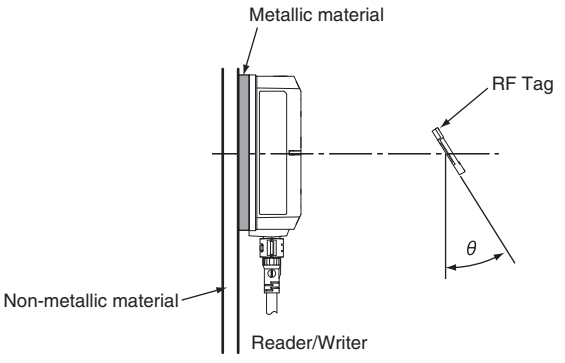

V680S-D8KF67

■ Influence of Metal at Back Surface of RF Tags

The communications range will decrease if there is metal at the back of the V680S-D8KF67 RF Tag. If the RF Tag is mounted on metallic material, use a non-metallic spacer (e.g., plastic or resin). The following graphs show the relationship between the distance from the RF Tag to the metallic surface and the communications range.

●V680S-HMD63-PNT and V680S-D8KF67

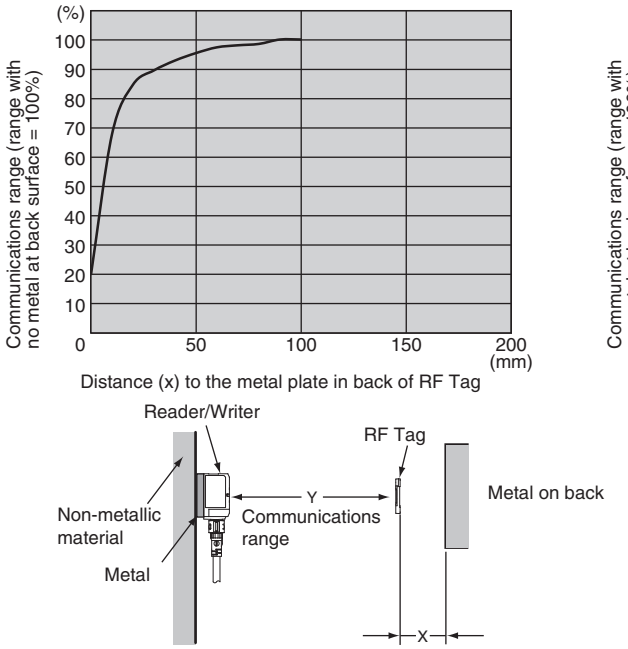

●V680S-HMD64-PNT and V680S-D8KF67

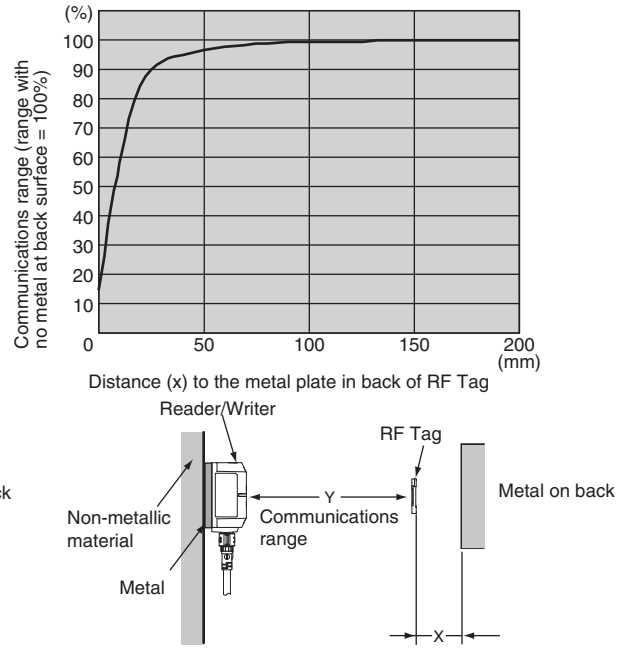

●V680S-HMD66-PNT and V680S-D8KF67

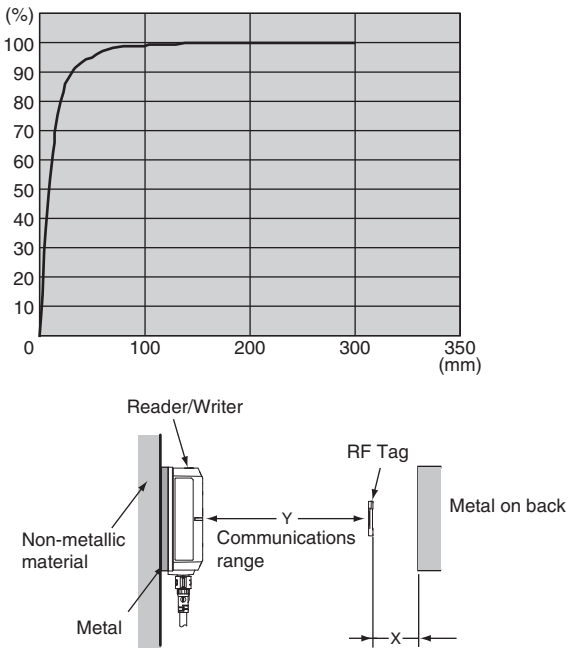

■ Mutual Interference of RF Tags

If you use more than one RF Tag, separate them by at least the interval shown below to prevent malfunctions due to mutual interference.

If the distance between the RF tags is too short, read / write distance will be reduced.

▪ V680S-HMD63-PNT Reader/Writer

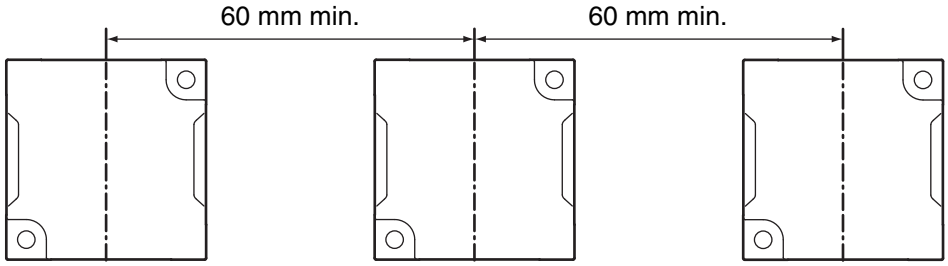

▪ V680S-HMD64-PNT Reader/Writer

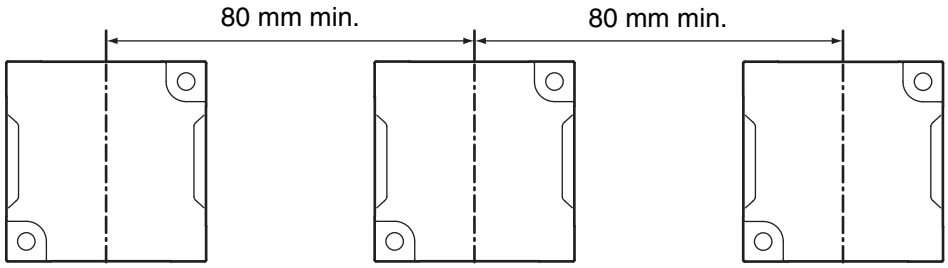

▪ V680S-HMD66-PNT Reader/Writer

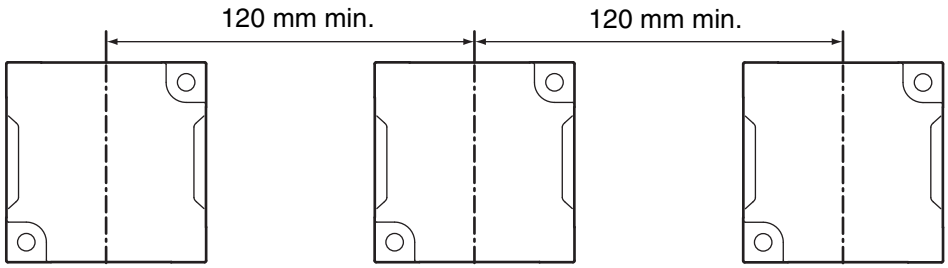

■ Influence of Inclination

Install the Reader/Writer and RF Tags so that the Reader/Writer and RF Tags are as parallel to each other as possible.

Communications will be possible even if the Reader/Writer and RF Tags are not parallel to each other; however, the communications range is affected by the inclination between them as shown in the following graphs.

▪ Rates of Change in Communications Range for Inclination of V680S-D2KF67

	RF Tag inclination (θ°)									
	0	10	20	30	40	50	60	70	80	90
V680S-HMD63-PNT and V680S-D8KF67	0%	-1%	-2%	-5%	-8%	-13%	-20%	-30%	-45%	---
V680S-HMD64-PNT and V680S-D8KF67	0%	-1%	-2%	-4%	-6%	-10%	-17%	-24%	-36%	---
V680S-HMD66-PNT and V680S-D8KF67	0%	-1%	-2%	-4%	-7%	-12%	-19%	-28%	-42%	---

▪ Measurement Conditions

• V680S-HMD63-PNT and V680S-D8KF67

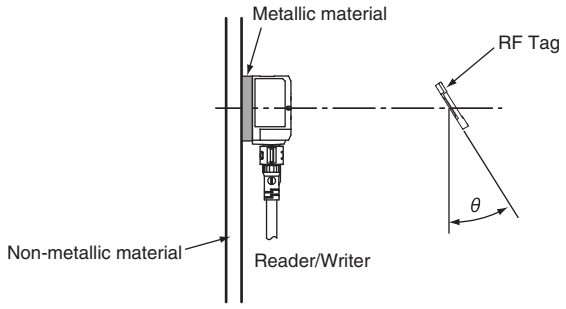

• V680S-HMD64-PNT and V680S-D8KF67

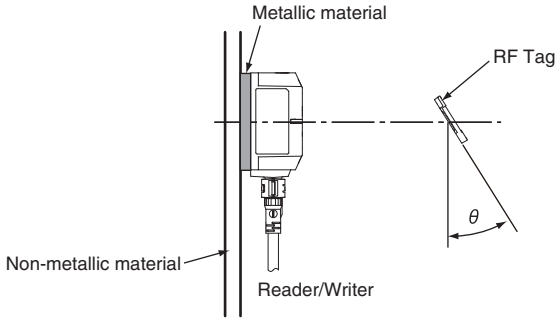

• V680S-HMD66-PNT and V680S-D8KF67

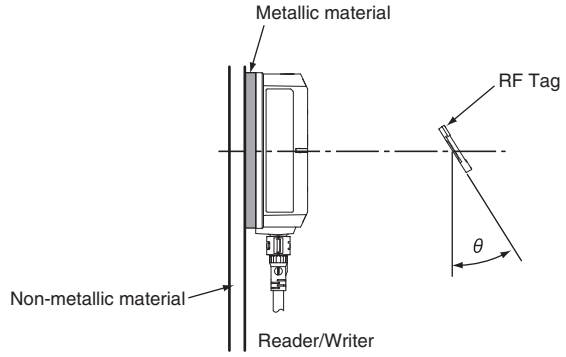

V680S-D8KF67M

■ Influence of Surrounding Metal

The V680S-D8KF67M can be surface-mounted or it can be embedded in metal. However, do not allow the height of the metal to exceed the height of the V680S-D8KF67M.

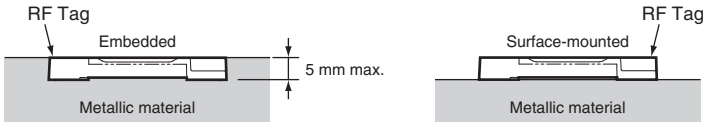

●V680S-HMD63-PNT and V680S-D8KF67M

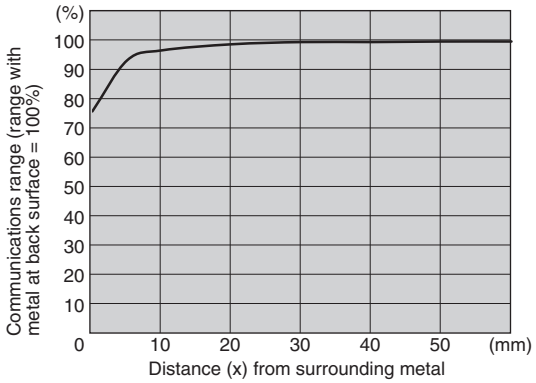

●V680S-HMD64-PNT and V680S-D8KF67M

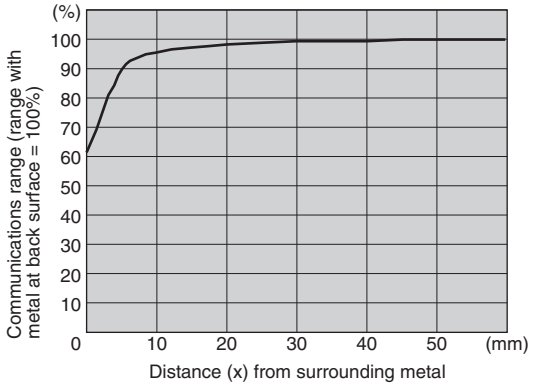

●V680S-HMD66-PNT and V680S-D8KF67M

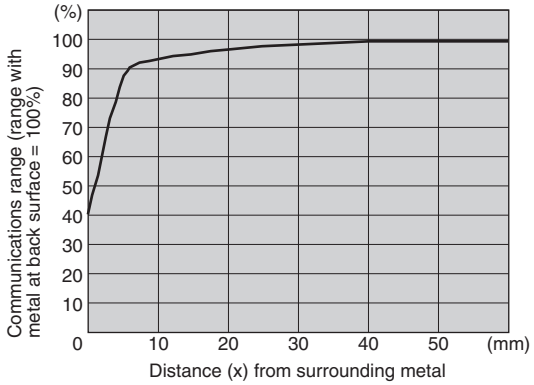

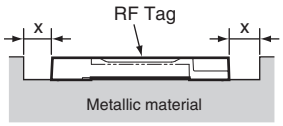

■ Mutual Interference of RF Tags

If you use more than one RF Tag, separate them by at least the interval shown below to prevent malfunctions due to mutual interference.

If the distance between the RF tags is too short, read / write distance will be reduced.

▪ V680S-HMD63-PNT Reader/Writer

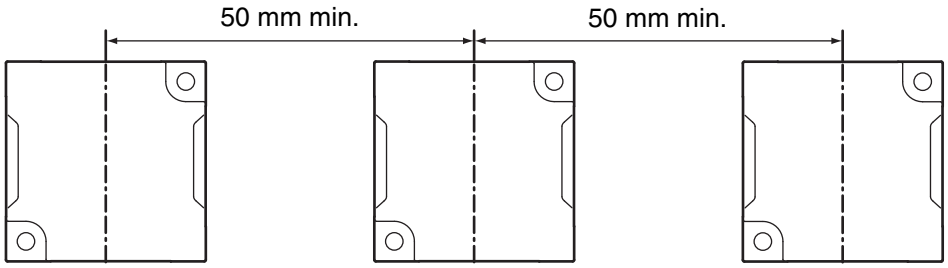

▪ V680S-HMD64-PNT Reader/Writer

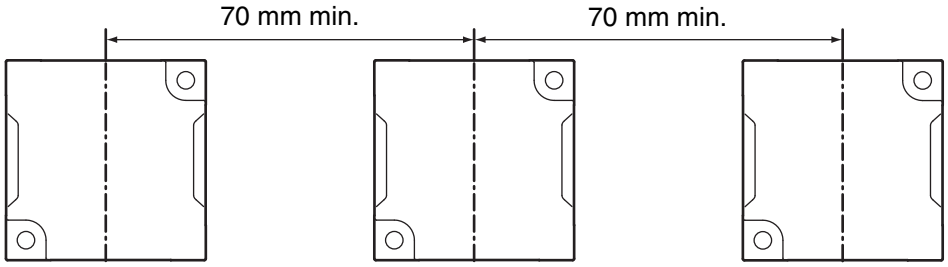

▪ V680S-HMD66-PNT Reader/Writer

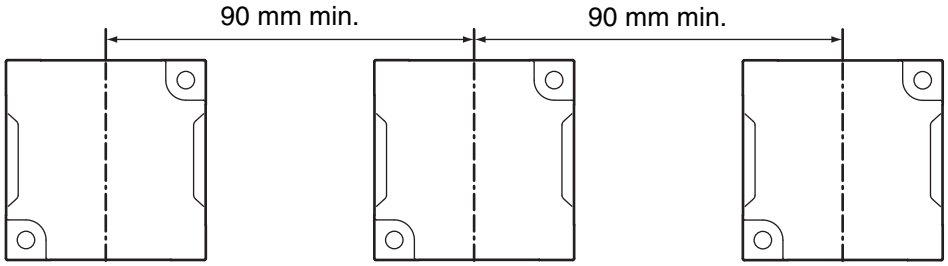

■ Influence of Inclination

Install the Reader/Writer and RF Tags so that the Reader/Writer and RF Tags are as parallel to each other as possible.

Communications will be possible even if the Reader/Writer and RF Tags are not parallel to each other; however, the communications range is affected by the inclination between them as shown in the following graphs.

▪ Rates of Change in Communications Range for Inclination of V680S-D8KF67M

	RF Tag inclination (θ°)									
	0	10	20	30	40	50	60	70	80	90
V680S-HMD63-PNT and V680S-D8KF67M (Metal at back surface: Steel)	0%	-1%	-3%	-7%	-13%	-24%	-47%	---	---	---
V680S-HMD64-PNT and V680S-D8KF67M (Metal at back surface: Steel)	0%	-1%	-3%	-7%	-13%	-22%	-38%	---	---	---
V680S-HMD66-PNT and V680S-D8KF67M (Metal at back surface: Steel)	0%	-1%	-4%	-10%	-20%	-39%	---	---	---	---

▪ Measurement Conditions

• V680S-HMD63-PNT and V680S-D8KF67M (Metal at Back Surface: Steel)

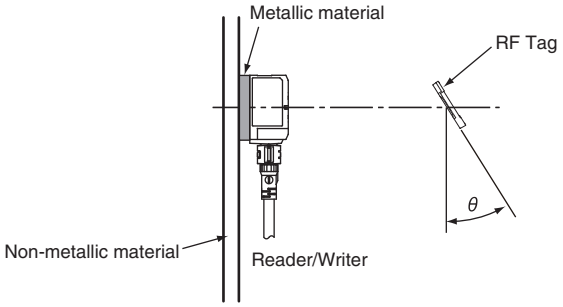

• V680S-HMD64-PNT and V680S-D8KF67M (Metal at Back Surface: Steel)

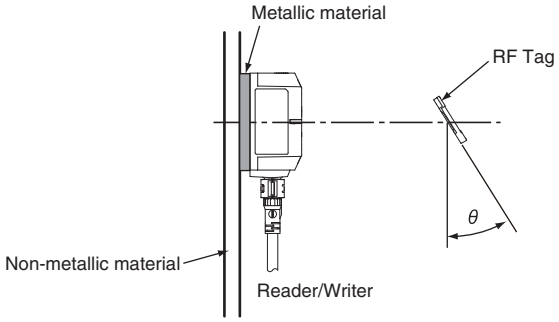

• V680S-HMD66-PNT and V680S-D8KF67M (Metal at Back Surface: Steel)

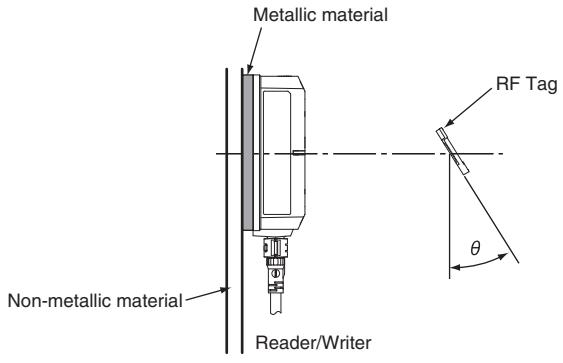

V680S-D2KF68

■ Influence of Metal at Back Surface of RF Tags

The communications range will decrease if there is metal at the back of the V680S-D2KF68 RF Tag. If the RF Tag is mounted on metallic material, use a non-metallic spacer (e.g., plastic or resin). The following graphs show the relationship between the distance from the RF Tag to the metallic surface and the communications range.

●V680S-HMD64-PNT and V680S-D2KF68

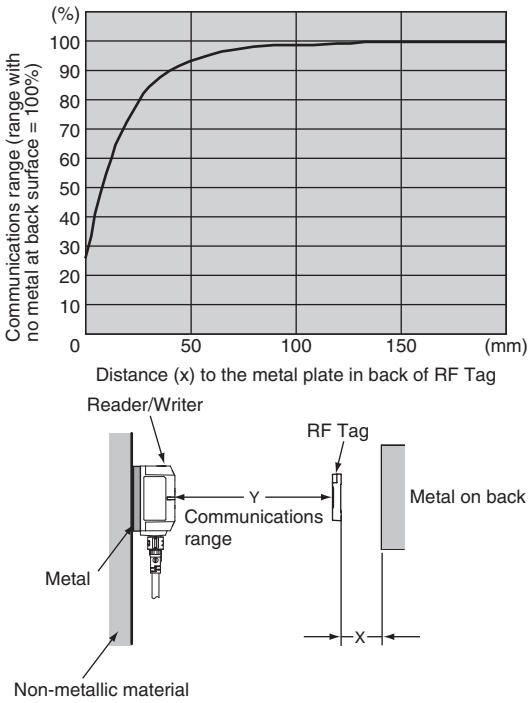

●V680S-HMD66-PNT and V680S-D2KF68

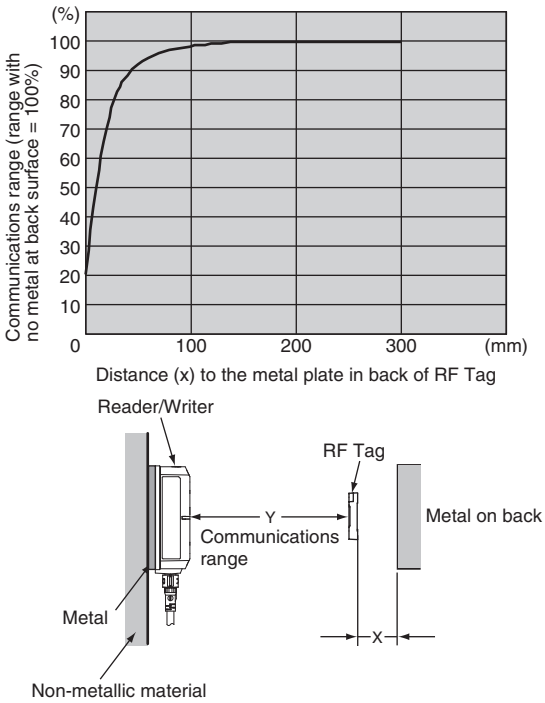

■ Mutual Interference of RF Tags

If you use more than one RF Tag, separate them by at least the interval shown below to prevent malfunctions due to mutual interference.

If the distance between the RF tags is too short, read / write distance will be reduced.

▪ V680S-HMD64-PNT Reader/Writer

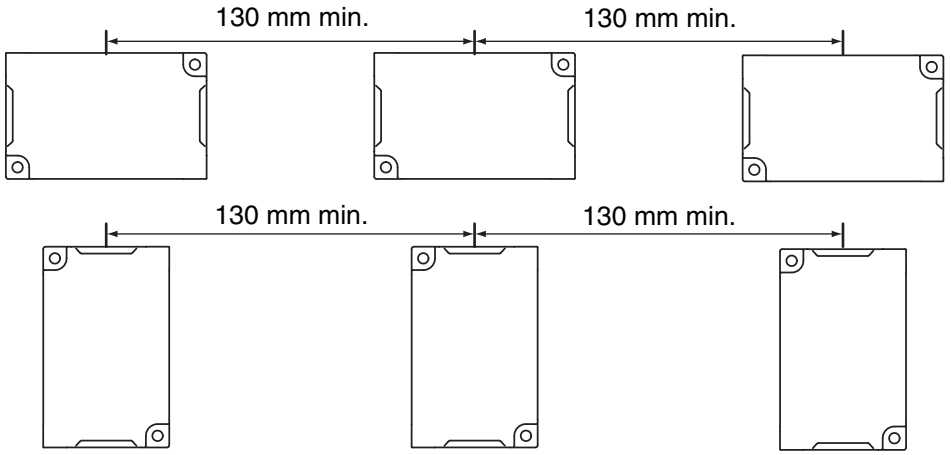

▪ V680S-HMD66-PNT Reader/Writer

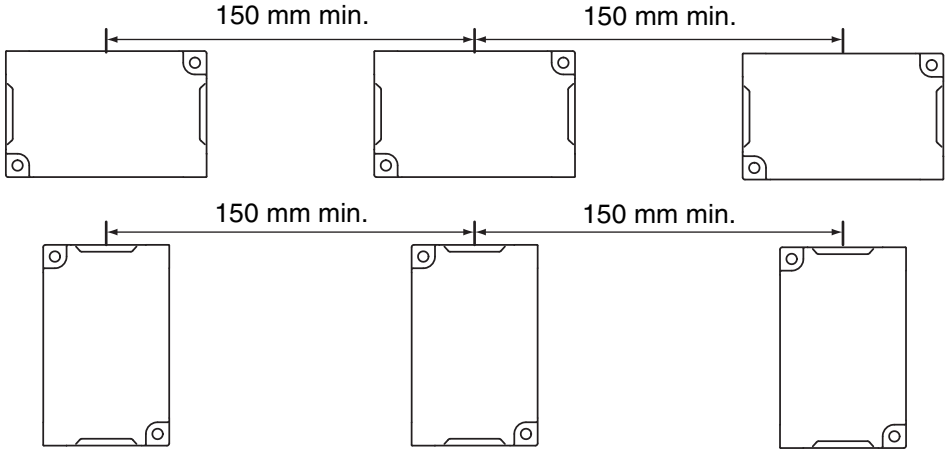

■ Influence of Inclination

Install the Reader/Writer and RF Tags so that the Reader/Writer and RF Tags are as parallel to each other as possible.

Communications will be possible even if the Reader/Writer and RF Tags are not parallel to each other; however, the communications range is affected by the inclination between them as shown in the following graphs.

▪ Rates of Change in Communications Range for Inclination of V680S-D2KF68

	RF Tag inclination (θ°)									
	0	10	20	30	40	50	60	70	80	90
V680S-HMD64-PNT and V680S-D2KF68 horizontally	-0%	-1%	-2%	-3%	-6%	-9%	-14%	-21%	-33%	-59%
V680S-HMD64-PNT and V680S-D2KF68 vertically	-0%	-1%	-3%	-5%	-8%	-13%	-20%	-28%	-41%	-66%
V680S-HMD66-PNT and V680S-D2KF68 horizontally	-0%	-1%	-2%	-3%	-6%	-11%	-16%	-25%	-39%	-65%
V680S-HMD66-PNT and V680S-D2KF68 vertically	-0%	-1%	-2%	-5%	-8%	-13%	-20%	-29%	-42%	-68%

▪ Measurement Conditions

• V680S-HMD64-PNT and V680S-D2KF68 Horizontally

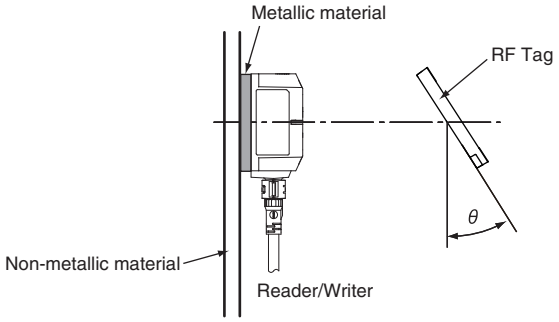

• V680S-HMD64-PNT and V680S-D2KF68 Vertically

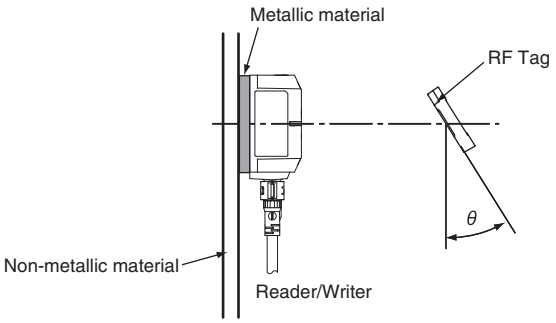

• V680S-HMD66-PNT and V680S-D2KF68 Horizontally

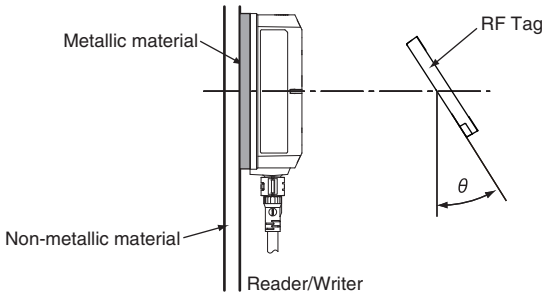

• V680S-HMD66-PNT and V680S-D2KF68 Vertically

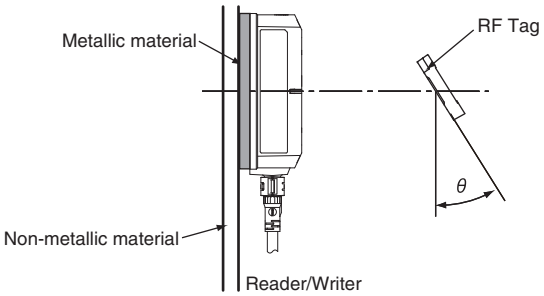

V680S-D2KF68M

■ Influence of Surrounding Metal

The V680S-D2KF68M can be surface-mounted or it can be embedded in metal. However, do not allow the height of the metal to exceed the height of the V680S-D2KF68M.

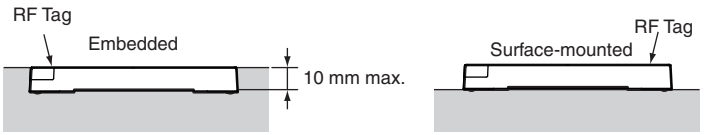

●V680S-HMD64-PNT and V680S-D2KF68M

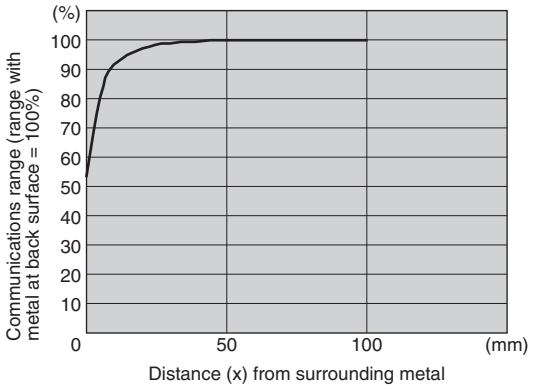

●V680S-HMD66-PNT and V680S-D2KF68M

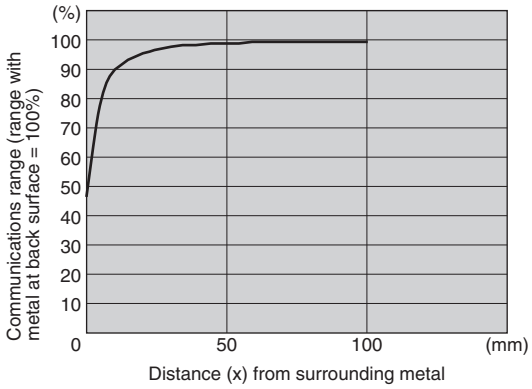

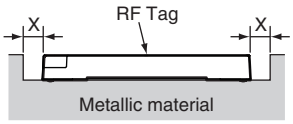

■ Mutual Interference of RF Tags

If you use more than one RF Tag, separate them by at least the interval shown below to prevent malfunctions due to mutual interference.

If the distance between the RF tags is too short, read / write distance will be reduced.

▪ V680S-HMD64-PNT Reader/Writer

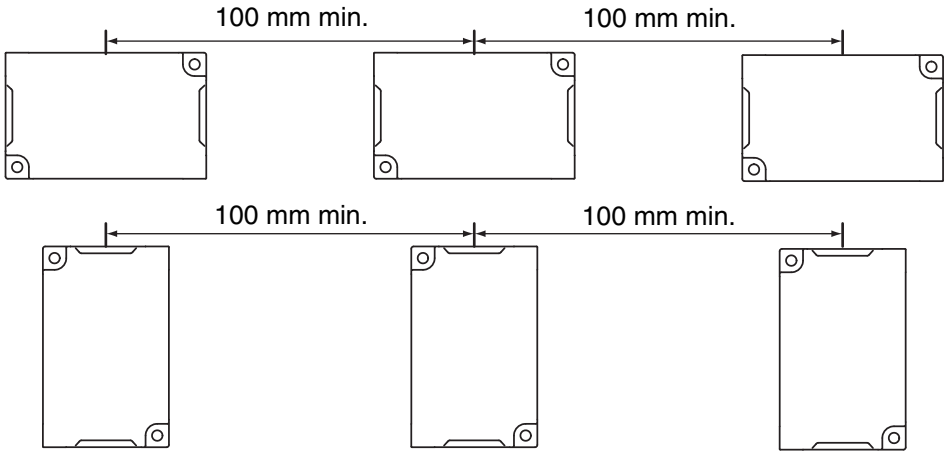

▪ V680S-HMD66-PNT Reader/Writer

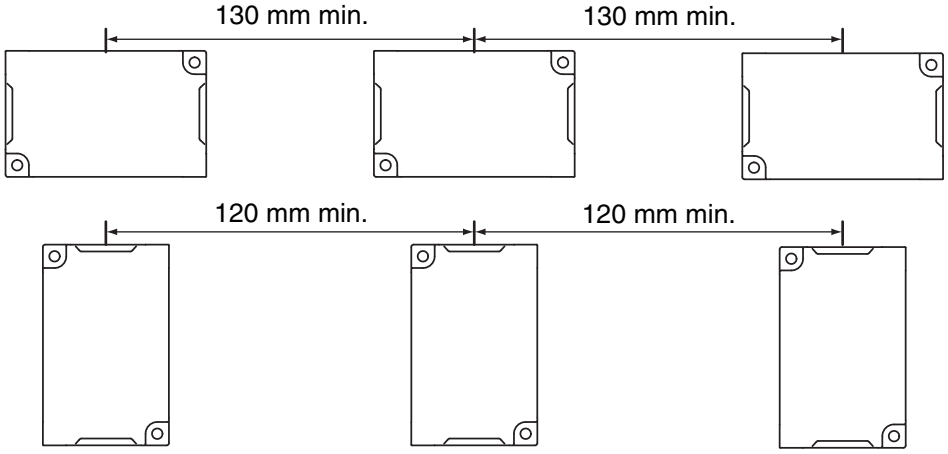

■ Influence of Inclination

Install the Reader/Writer and RF Tags so that the Reader/Writer and RF Tags are as parallel to each other as possible.

Communications will be possible even if the Reader/Writer and RF Tags are not parallel to each other; however, the communications range is affected by the inclination between them as shown in the following graphs.

▪ Rates of Change in Communications Range for Inclination of V680S-D2KF68M

	RF Tag inclination (θ°)									
	0	10	20	30	40	50	60	70	80	90
V680S-HMD64-PNT and V680S-D2KF68M horizontally	0%	0%	-1%	-3%	-5%	-9%	-17%	-32%	---	---
V680S-HMD64-PNT and V680S-D2KF68M vertically	0%	-2%	-4%	-7%	-12%	-19%	-31%	-51%	---	---
V680S-HMD66-PNT and V680S-D2KF68M horizontally	0%	-1%	-2%	-4%	-8%	-13%	-23%	-43%	---	---
V680S-HMD66-PNT and V680S-D2KF68M vertically	0%	-1%	-4%	-7%	-12%	-21%	-33%	-58%	---	---

▪ Measurement Conditions

• V680S-HMD64-PNT and V680S-D2KF68M Horizontally

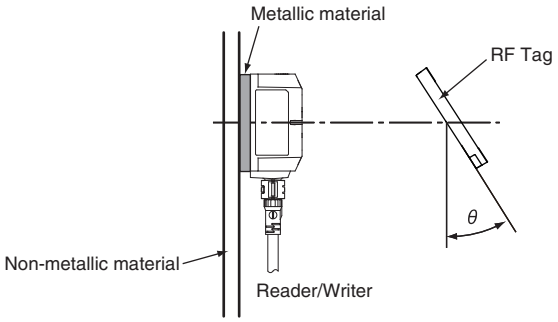

• V680S-HMD64-PNT and V680S-D2KF68M Vertically

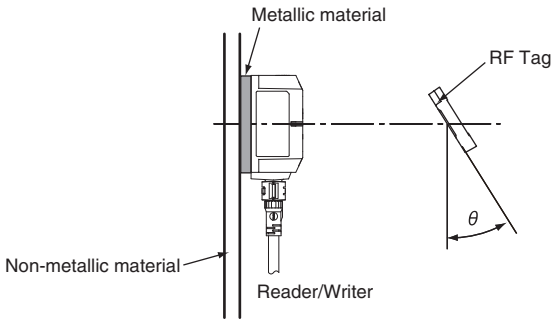

• V680S-HMD66-PNT and V680S-D2KF68M Horizontally

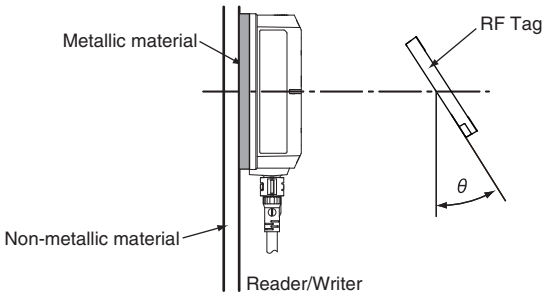

• V680S-HMD66-PNT and V680S-D2KF68M Vertically

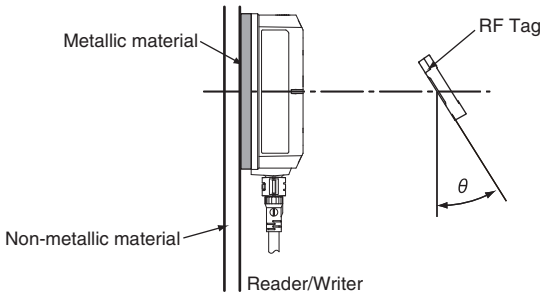

V680S-D8KF68

■ Influence of Metal at Back Surface of RF Tags

The communications range will decrease if there is metal at the back of the V680S-D8KF68 RF Tag. If the RF Tag is mounted on metallic material, use a non-metallic spacer (e.g., plastic or resin). The following graphs show the relationship between the distance from the RF Tag to the metallic surface and the communications range.

●V680S-HMD64-PNT and V680S-D8KF68

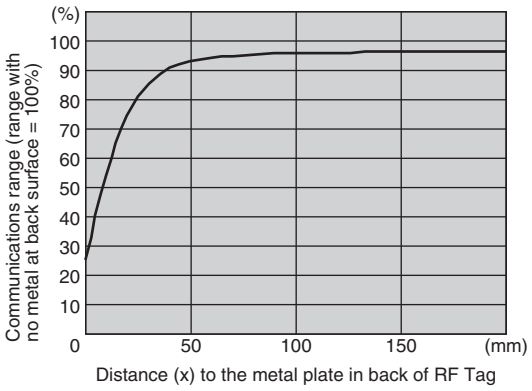

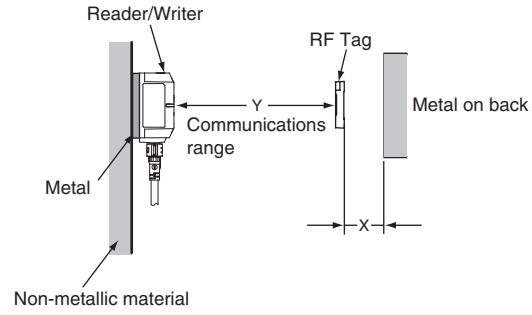

●V680S-HMD66-PNT and V680S-D8KF68

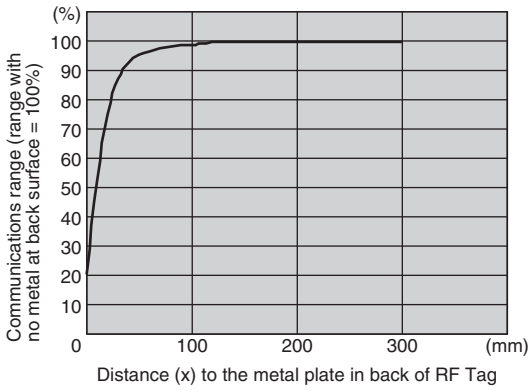

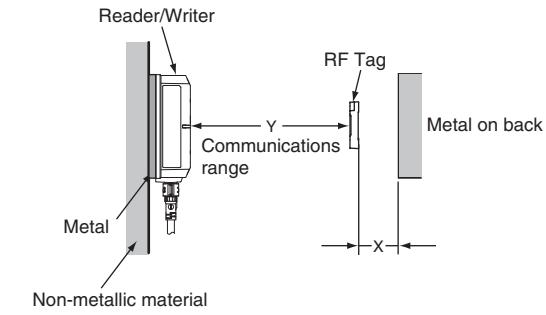

■ Mutual Interference of RF Tags

If you use more than one RF Tag, separate them by at least the interval shown below to prevent malfunctions due to mutual interference.

If the distance between the RF tags is too short, read / write distance will be reduced.

▪ V680S-HMD64-PNT Reader/Writer

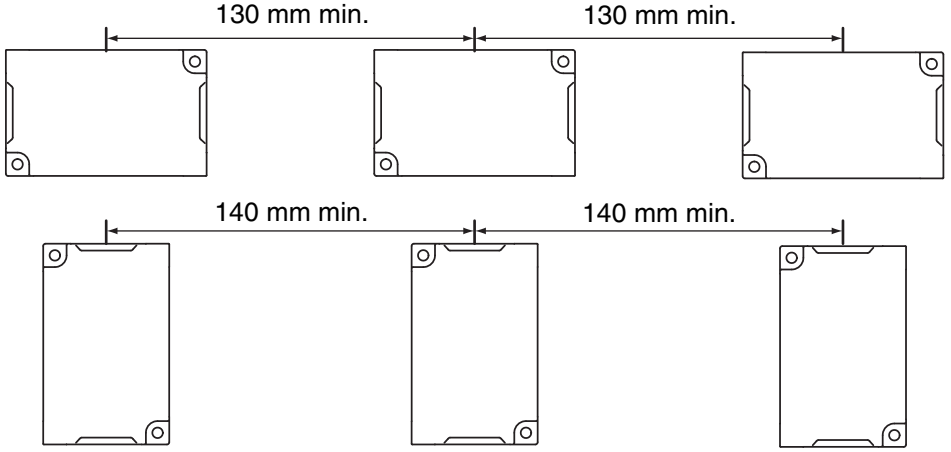

▪ V680S-HMD66-PNT Reader/Writer

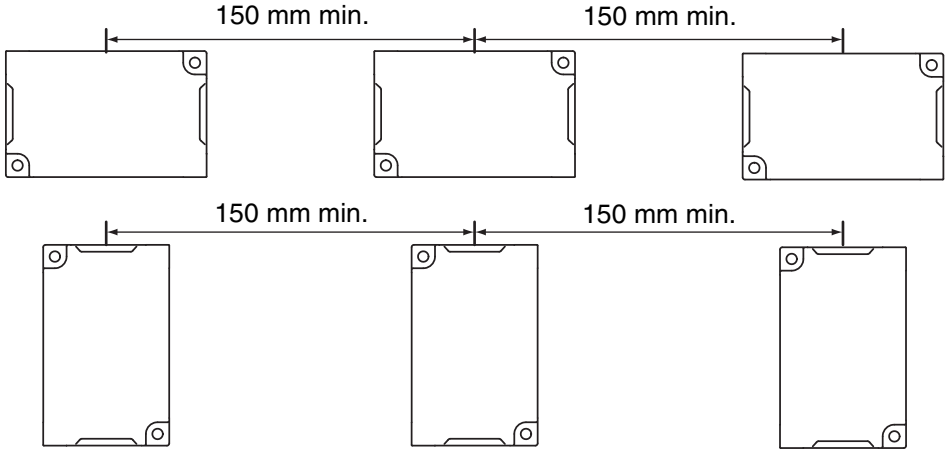

■ Influence of Inclination

Install the Reader/Writer and RF Tags so that the Reader/Writer and RF Tags are as parallel to each other as possible.

Communications will be possible even if the Reader/Writer and RF Tags are not parallel to each other; however, the communications range is affected by the inclination between them as shown in the following graphs.

▪ Rates of Change in Communications Range for Inclination of V680S-D8KF68

	RF Tag inclination (θ°)									
	0	10	20	30	40	50	60	70	80	90
V680S-HMD64-PNT and V680S-D8KF68 horizontally	0%	-1%	-2%	-3%	-5%	-9%	-14%	-21%	-32%	-58%
V680S-HMD64-PNT and V680S-D8KF68 vertically	0%	-1%	-3%	-5%	-8%	-13%	-19%	-28%	-41%	-65%
V680S-HMD66-PNT and V680S-D8KF68 horizontally	0%	-1%	-2%	-3%	-6%	-11%	-16%	-25%	-39%	---
V680S-HMD66-PNT and V680S-D8KF68 vertically	0%	-1%	-2%	-5%	-8%	-14%	-20%	-29%	-43%	-69%

▪ Measurement Conditions

• V680S-HMD64-PNT and V680S-D8KF68 Horizontally

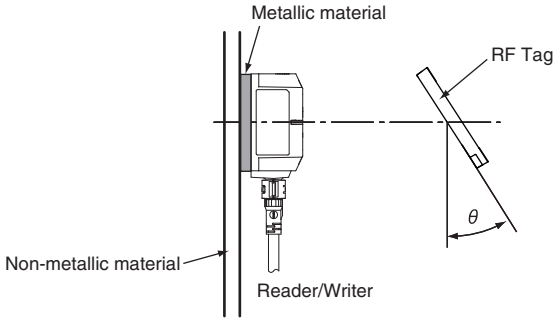

• V680S-HMD64-PNT and V680S-D8KF68 Vertically

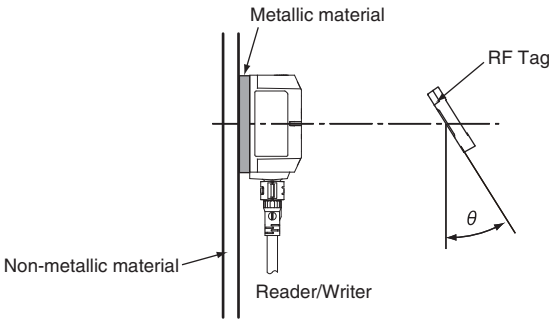

• V680S-HMD66-PNT and V680S-D8KF68 Horizontally

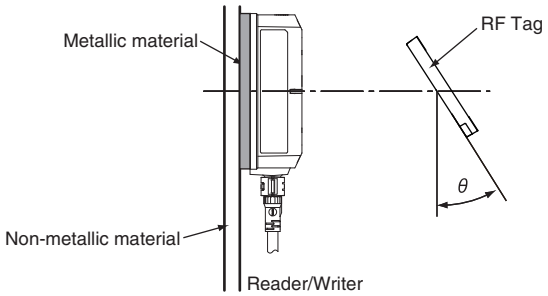

• V680S-HMD66-PNT and V680S-D8KF68 Vertically

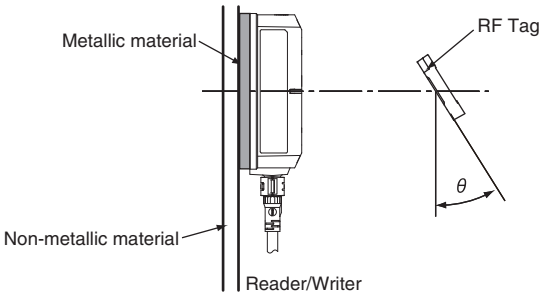

V680S-D8KF68M

■ Influence of Surrounding Metal

The V680S-D8KF68M can be surface-mounted or it can be embedded in metal. However, do not allow the height of the metal to exceed the height of the V680S-D8KF68M.

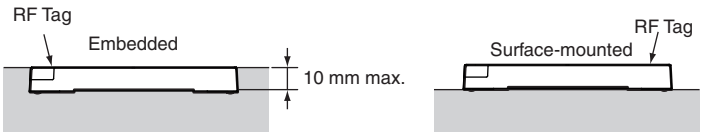

●V680S-HMD64-PNT and V680S-D8KF68M

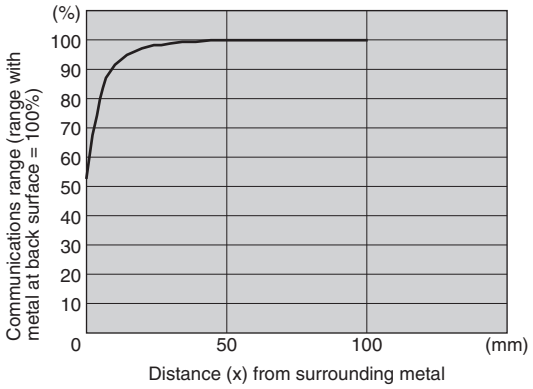

●V680S-HMD66-PNT and V680S-D8KF68M

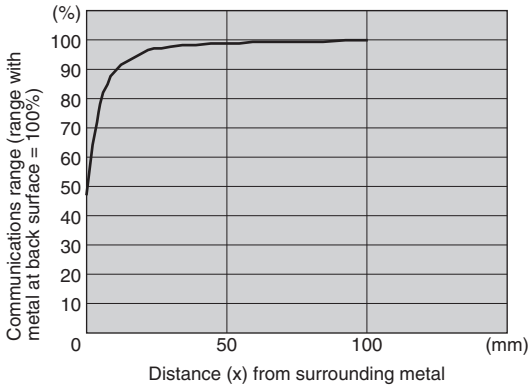

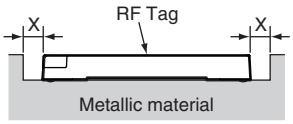

■ Mutual Interference of RF Tags

If you use more than one RF Tag, separate them by at least the interval shown below to prevent malfunctions due to mutual interference.

If the distance between the RF tags is too short, read / write distance will be reduced.

▪ V680S-HMD64-PNT Reader/Writer

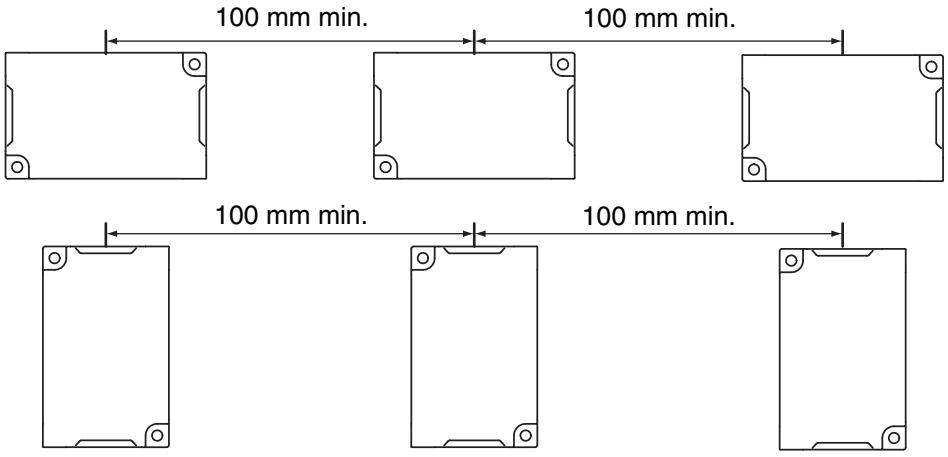

▪ V680S-HMD66-PNT Reader/Writer

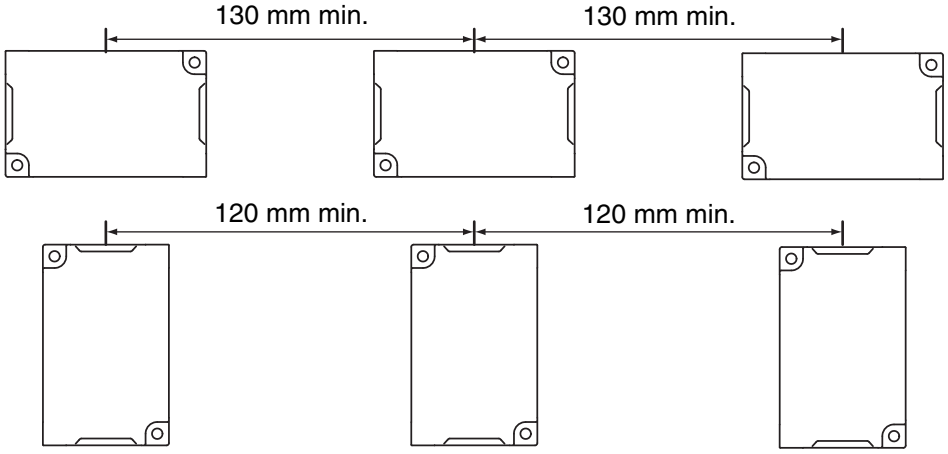

■ Influence of Inclination

Install the Reader/Writer and RF Tags so that the Reader/Writer and RF Tags are as parallel to each other as possible.

Communications will be possible even if the Reader/Writer and RF Tags are not parallel to each other; however, the communications range is affected by the inclination between them as shown in the following graphs.

▪ Rates of Change in Communications Range for Inclination of V680S-D8KF68M

	RF Tag inclination (θ°)									
	0	10	20	30	40	50	60	70	80	90
V680S-HMD64-PNT and V680S-D8KF68M horizontally	0%	-1%	-1%	-3%	-5%	-9%	-16%	-29%	---	---
V680S-HMD64-PNT and V680S-D8KF68M vertically	0%	-1%	-3%	-7%	-12%	-19%	-30%	-52%	-56%	---
V680S-HMD66-PNT and V680S-D8KF68M horizontally	0%	-1%	-2%	-4%	-8%	-13%	-24%	-50%	---	---
V680S-HMD66-PNT and V680S-D8KF68M vertically	0%	-1%	-4%	-8%	-13%	-22%	-35%	-67%	---	---

Measurement Conditions

• V680S-HMD64-PNT and V680S-D8KF68M Horizontally

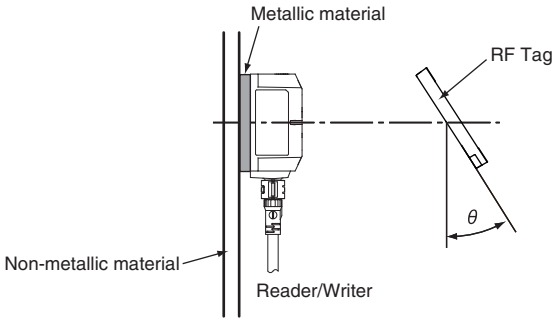

• V680S-HMD64-PNT and V680S-D8KF68M Vertically

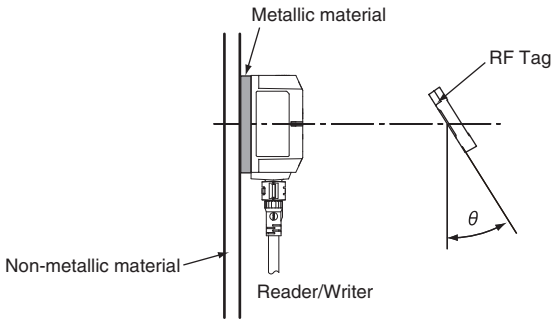

• V680S-HMD66-PNT and V680S-D8KF68M Horizontally

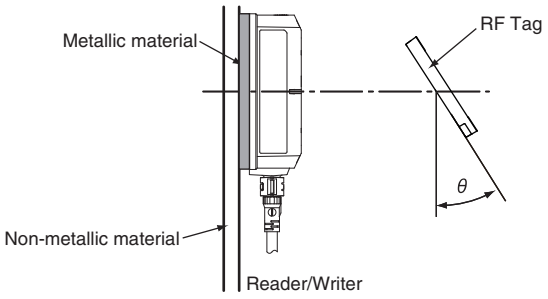

• V680S-HMD66-PNT and V680S-D8KF68M Vertically

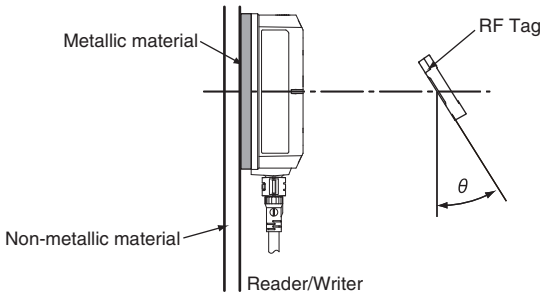

RF Tag Memory Capacities and Memory Types

(As of July 2019)

Model	Memory capacity (user memory)	Memory type	Life expectancy
V680-D1KP54T V680-D1KP66T V680-D1KP66MT V680-D1KP66T-SP	1,000 bytes	EEPROM	• Write endurance: 100,000 times per block (25°C) • Data retention: 10 years after writing (85°C or less)
V680-D1KP58HTN			• Write endurance: 100,000 times per block (25°C) • Data retention: 10 years after writing (85°C or less) * Total data retention at high temperatures exceeding 125°C is 10 hours
V680S-D2KF67 V680S-D2KF67M V680S-D2KF68 V680S-D2KF68M	2,000 bytes	FRAM	• Access frequency: One trillion times • Data retention: 10 years after writing (85°C or less)
V680S-D8KF67 V680S-D8KF67M V680S-D8KF68 V680S-D8KF68M	8,192 bytes		

RF Tag Memory Map

V680-D1KP□□ RF Tags

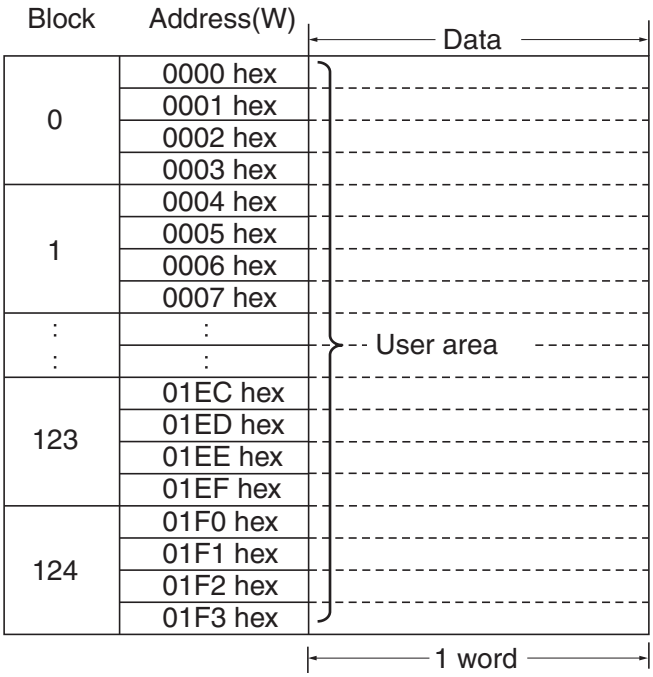

EEPROM is used as the memory in the RF Tag.
The user-accessible capacity is 1,000 bytes.

V680S-D2KF6□ RF Tags

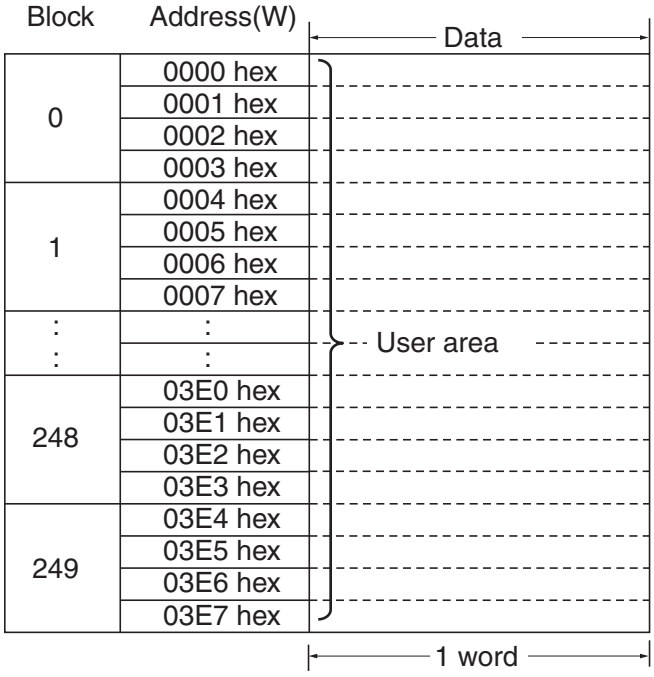

FRAM is used as the memory in the RF Tag.
The user-accessible capacity is 2,000 bytes.

V680S-D8KF6□ RF Tags

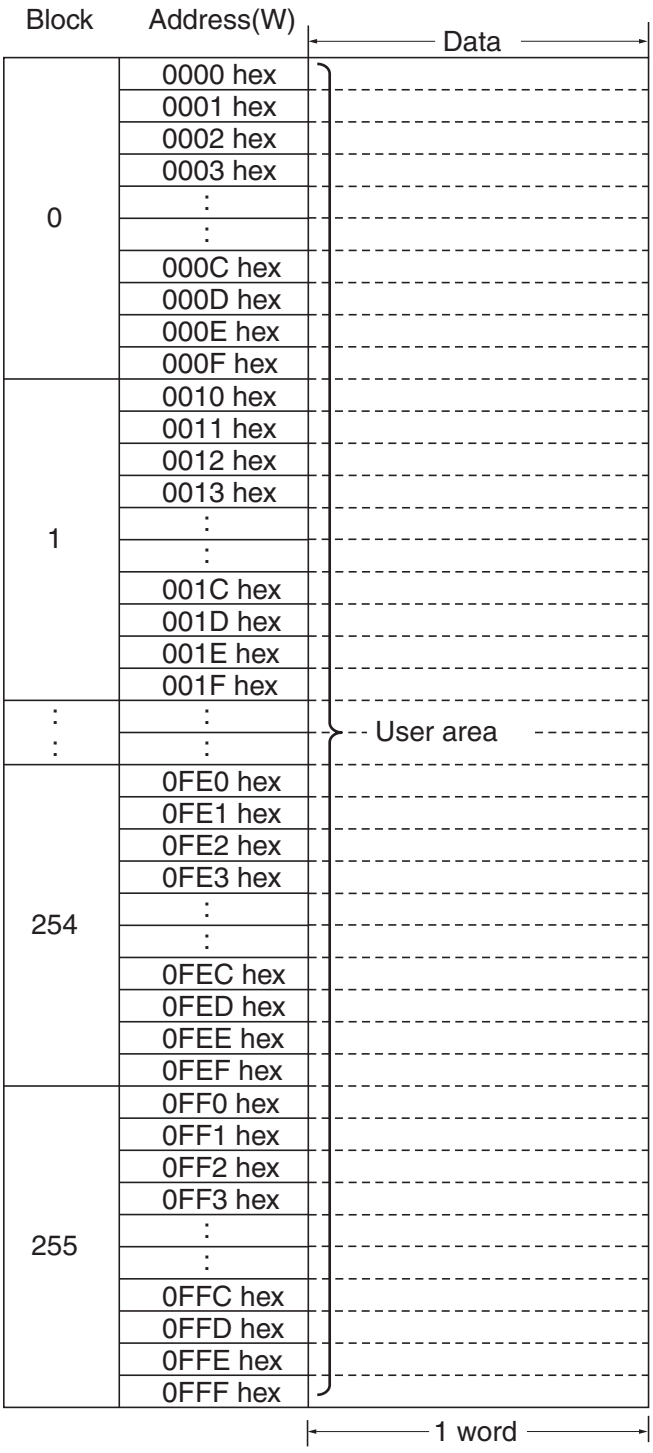

FRAM is used as the memory in the RF Tag.
The user-accessible capacity is 8,192 bytes.

Chemical Resistance of the Reader/Writers and RF Tags

Chemical Resistance of the Reader/Writers

■ Applicable Models

V680S-HMD63-PNT/-HMD64-PNT/-HMD66-PNT

The chemicals that affect the Reader/Writer are listed below.
PBT (polybutylene terephthalate) is used as the case material and a urethane resin is used as the filling. Refer to the following lists and do not use chemicals that affect PBT and urethane resins.
Reader/Writers cannot be used in applications with explosion-proof specifications.

▪ Chemicals That Cause Deformations, Cracks, Etc.

Chemical name
Acetone, trichloroethylene, ethylene dichloride, sodium hydroxide, and other alkaline substances, hydrochloric acid (35% or more), nitric acid (70% or more)

▪ Chemicals That May Cause Discoloration, Swelling, Etc.

Chemical name
Hydrochloric acid (10% RT), acetic acid (5% RT), benzene, nitric acid (20% or more)

The above results are from tests conducted at room temperature (23°C). Even if the chemicals do not affect the PPS or epoxy resins at room temperature, they may affect the resins at higher or lower temperatures. Check the chemicals carefully in advance.

Chemical Resistance of RF Tags

■ Applicable Models

V680-D1KP54T/-D1KP66T/-D1KP66MT/-D1KP58HTN/V680S-D□KF6□

PPS resin is used for case material. Refer to the following lists and do not use chemicals that affect PPS and epoxy resin.

RF Tags cannot be used in applications with explosion-proof specifications.

Chemical		At room temperature	At 90°C
Hydrochloric acid	37%	A	A
	10%	A	A
Sulfuric acid	98%	A	B
	50%	A	A
	30%	A	A
	3%	A	A
Nitric acid	60%	B	C
	40%	A	B
	10%	A	A
Hydrogen fluoride solution	40%	B	B
Chromic acid	40%	A	A
Hydrogen peroxide solution	28%	A	B
	3%	A	A
Sodium hydroxide solution	60%	A	A
	10%	A	A
	1%	A	A
Ammonia solution	28%	A	B
	10%	A	B
Sodium chloride	10%	A	A
Sodium carbonate	20%	A	A
	2%	A	A

Chemical		At room temperature	At 90°C
Sodium hypochlorite		A	A
Phenol solution	5%	A	A
Glacial acetic acid		A	A
Acetic acid		A	A
Oleic acid		A	A
Methyl alcohol	95%	A	A
Ethyl alcohol	95%	A	A
Ethyl acetate		A	A
Sebacic acid diethylhexyl		A	A
Acetone		A	A
Diethyl ether		A	A
n-heptane		A	A
2-2-4 trimethylpentane		A	A
Benzene		A	A
Toluene		A	A
Aniline		A	A
Mineral oil		A	A
Gasoline		A	A
Insulating oil		A	A
Dichloroethylene		A	A
Carbon tetrachloride		A	A

A: Has no adverse effect, B: May cause discoloration, swelling, etc., C: Causes deformation, cracks, etc.

The above table shows the extent of changes in PPS resin exposed to each chemical at room temperature and at 90°C. If actual chemicals, concentrations, and temperatures are different from those shown in the tables, always conduct tests under the actual conditions in which the RF Tags are to be used.

■ Applicable Models

V680-D1KP66T-SP

PFA resin is used for exterior case material. Refer to the following lists and do not use chemicals that affect PFA resin.
RF Tags cannot be used in applications with explosion-proof specifications.

▪ Chemical Resistance of Fluoroplastic PFA (Reference)

PFA: Tetrafluorethylene-Perfluoroalkylvinyletheir Copolymer

Fluoroplastic PFA does not react with most chemicals except molten alkali metal, hot pressurized fluorine (F2), and some halogen derivatives. The following tables show the results of tests in which PFA was soaked in or exposed to commonly used organic and inorganic chemicals. In these tests, a compression-molded test piece (1.3 mm thick) was soaked in the chemical at a specified temperature for a week (168 hours) and taken out of the chemical, then the weight change, tensile strength, and elongation of the test piece were immediately measured. If the change in the tensile strength is 15 % or less, the change in the elongation is 10 % or less, and the increase in the weight is less than 0.5 %, the results of the test can be considered normal.
If PFA is exposed to trichloroacetic acid, tri-n-butyl phosphate, perchloroethylene, carbon thtrachloride, and other liquids (which easily make resin surfaces wet) at a high temperature, it tends to increase its weight due to absorption and reduce its tensile strength. Even when PFA absorbs chemicals and solvents, its molecular structure will not change, If, however, PFA is subject to temperature or pressure changes or mechanical damage when it has absorbed chemicals, the chemicals will repeatedly expand and contract inside pfa, causing mechanical problems such as cracks and bulging. In fact, this problem occurs with any kind of plastic.

▪ Inorganic Chemicals

Chemical name	Test temperature (°C)	Resulting characteristics (%)		Weight increase rate (%)
		Tensile strength	Elongation	
Concentrated hydrochloric acid	120	98	100	0.0
Concentrated sulfuric acid	120	95	98	0.0
Hydrofluoric acid (60%)	23	99	99	0.0
Fuming sulfuric acid	23	95	96	0.0
Aqua regia	120	99	100	0.0
Chromic acid (50%)	120	93	97	0.0
Concentrated nitric acid	120	95	98	0.0
Fuming nitric acid	23	99	99	0.0
Concentrated ammonia solution	66	98	100	0.0
Caustic soda (50%)	120	93	99	0.4
Hydrogen peroxide solution (30%)	23	93	95	0.0
Bromine	23	99	100	0.5
Chlorine	120	92	100	0.5
Ferrous chloride (25%)	100	93	98	0.0
Zinc chloride (25%)	100	96	100	2.7
Chlorosulfonic acid	151	91	100	2.7
Concentrated phosphoric acid	100	93	100	0.0

■ **Organic Chemicals**

Chemical name	Test temperature (°C)	Resulting characteristics (%)		Weight increase rate (%)
		Tensile strength	Elongation	
Glacial acetic acid	118	95	100	0.4
Acetic anhydride	139	91	99	0.3
Trichloroacetic acid	196	90	100	2.2
Isooctane	99	94	100	0.7
Naphtha	100	91	100	0.5
Mineral oil	180	87	95	0.0
Toluene	110	88	100	0.7
o-creosol	191	92	96	0.2
Nitrobenzene	210	90	100	0.3
Benzyl alcohol	205	93	99	0.3
Aniline	185	94	100	0.3
n-butylamine	78	86	97	0.4
Ethylenediamine	117	96	100	0.1
Tetrahydrofuran	66	88	100	0.1
Benzaldehyde	179	90	99	0.5
Cyclohexane	156	92	100	0.4
Methyl ethyl ketone	80	90	100	0.4
Acetophenone	202	90	100	0.6
Dimethylphtalate	200	98	100	0.3
n-butyl acetate	125	93	100	0.5
Tri-n-butyl phosphate	200	91	100	2.0
Methylene chloride	40	94	100	0.8
Perchloroethylene	121	86	100	2.0
Carbon tetrachloride	77	87	100	2.3
Dimethyl formamide	154	96	100	0.2
Dimethyl sulfoxide	189	95	100	0.1
Dioxane	101	92	100	0.6

Reference: *Fluoroplastics Handbook*, The Nikkan Kogyo Shimbun Ltd. (Takaomi Satogawa)

Degree of Protection

Ingress protection degrees (IP-□□) are determined by the following tests. Be sure to check the sealing capability under the actual operating environment and conditions before actual use.

■ IEC (International Electrotechnical Commission) IEC 60529:2001

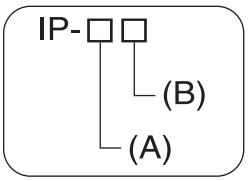

(A) First Digit: Degree of Protection from Solid Materials

Degree	Protection	
0		No protection
1	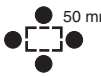	Protects against penetration of any solid object such as a hand that is 50 mm or more in diameter.
2		Protects against penetration of any solid object, that is 12.5 mm or more in diameter. Even if finger or other object 12 mm in diameter penetrates, it will not reach a hazardous part.
3		Protects against penetration of any solid object, such as a wire, that is 2.5 mm or more in diameter.
4	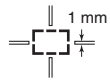	Protects against penetration of any solid object, such as a wire, that is 1 mm or more in diameter.
5		Protects against penetration of dust of a quantity that may cause malfunction or obstruct the safe operation of the product.
6		Protects against penetration of all dust.

(B) Second Digit: Degree of Protection Against Water

Degree	Protection		Test method (with pure water)	
0	No protection	Not protected against water.	No test	
1	Protection against water drops	Protects against vertical drops of water towards the product.	Water is dropped vertically towards the product from the test machine for 10 min.	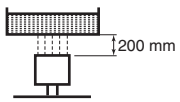
2	Protection against water drop	Protects against drops of water approaching at a maximum angle of 15° to the left, right, back, and front from vertical towards the product.	Water is dropped for 25 min each (i.e., 10 min in total) towards the product inclined 15° to the left, right, back, and front from the test machine.	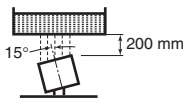
3	Protection against sprinkled water	Protects against sprinkled water approaching at a maximum angle of 60° from vertical towards the product.	Water is sprinkled for 10 min at a maximum angle of 60° to the left and right from vertical from the test machine.	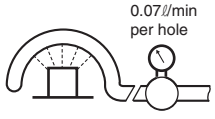

Degree	Protection		Test method (with pure water)	
4	Protection against water spray	Protects against water spray approaching at any angle towards the product.	Water is sprayed at any angle towards the product for 10 min from the test machine.	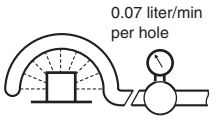
5	Protection against water jet spray	Protects against water jet spray approaching at any angle towards the product.	Water is jet sprayed at any angle towards the product for 1 min per square meter for at least 3 min in total from the test machine.	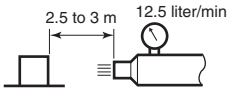
6	Protection against high pressure water jet spray	Protects against high-pressure water jet spray approaching at any angle towards the product.	Water is jet sprayed at any angle towards the product for 1 min per square meter for at least 3 min in total from the test machine.	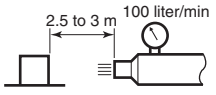
7	Protection against limited immersion in water	Resists the penetration of water when the product is placed underwater at specified pressure for a specified time.	The product is placed 1 m deep in water (if the product is 850 mm max. in height) for 30 min.	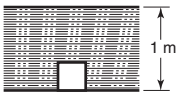
8 (See note.)	Protection against long-term immersion in water	Can be used continuously underwater.	The test method is determined by the manufacturer and user.	

Note: OMRON Test Method

Usage condition: 10 m or less under water in natural conditions

1. No water ingress after 1 hour under water at 2 atmospheres of pressure.
2. Sensing distance and insulation resistance specifications must be met after 100 repetitions of half hour in 5°C water and half hour in 85°C water.

About IPX9K

IPX9K is a protection standard regarding high temperature and high-pressure water which is defined by the German standard (DIN 40050 PART9).
Water is sprayed on 80 °C hot water with the water pressure of 80 to 100BAR from a nozzle to the test piece.
Amount of water is 14 to 16 liters/minute.
The distance between the test piece and a nozzle is 10 to 15 cm, and the directions of water-drainage are 0 degrees, 30 degrees, 60 degrees, and 90 degrees horizontally.
They are evaluated with the test piece is rotating on a horizontal plane by 30 seconds in each direction.

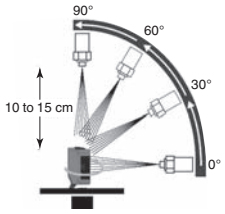

■ Oil Resistance (OMRON in-house standard)

Protection	
Oil-resistant	No adverse affect from oil drops or oil spray approaching from any direction.
Oil-proof	Protects against penetration of oil drops or oil spray approaching from any direction.

Note. Oil resistance has been tested using a specific oil as defined in the OMRON test method. (JIS C 0920:2003, Appendix 1)

Differences in Address and Size Specifications between V680 and V680S Reader/Writers

RF Tag access for V680S-series Reader/Writers is performed in words (1 word = 2 bytes). RF Tag access for V680-series Controllers is performed in bytes. Be sure to access data in the correct units.
The word and byte addresses for the memory map of a V680-D1KP□□ RF Tag are given below as a concrete example.

Word address	Byte address	← Data →
0000 hex	0000 hex	
	0001 hex	
0001 hex	0002 hex	
	0003 hex	
0002 hex	0004 hex	
	0005 hex	
0003 hex	0006 hex	
	0007 hex	
⋮	⋮	
	⋮	
01F2 hex	03E4 hex	
	03E5 hex	
01F3 hex	03E6 hex	
	03E7 hex	
		← 1 byte →

Because you cannot access data in bytes for a V680S-series Reader/Writer, you cannot, for example, read six bytes of data starting from address (byte address) 0001 hex. In this case, you would have to read four words from address (word address) 0000 hex and discard the first and last bytes at the host device.

CHECK!

Data is accessed in words for a V680S-series Reader/Writer. The smallest accessible unit is therefore one word (two bytes).

Index

Index

A
Auto 94

C
Chemical Resistance of RF Tags 297
Chemical Resistance of the Reader/Writers 296
Command Codes 151
Command Error Log 106
Communication Diagnostic 108
Communications Diagnostic 104
Communications Diagnostics Results 153
Communications Option Setting 103
Communications Options 93
Communications Range Specifications 44
Communications Settings View 192
Component Names 60
Configuration 202
Configuration File 207
Connections and Wiring 80
Connector Cover (Slim Type) 31
Convenient Functions 107
COPY DATA 161
Cyclic Data Exchanges Error 214

D
Data Characteristics 44
DATA FILL 158
Default Gateway 105
Degree of Protection 300
Device Information 153

E
Error Codes 151
Error Descriptions 210
Error Logs 106

F
Fatal Errors 210, 212
Field Extension Mode 115
FIFO Repeat 96
Fixed IP Address Setting 105

G
Gateway Address Setting 105
GET COMMAND ERROR LOG 174
GET FIRMWARE VERSION 171
GET MODEL INFORMATION 170
GET MULTI-READER/WRITER SETTINGS 168
GET MULTI-READER/WRITER STATUS 178
GET OPERATING TIME 172
GET RESTORE INFORMATION 176
GET RF TAG COMMUNICATIONS SETTINGS 165

I
Initialization 102
INITIALIZE 163
Installation 68
IP Address 105
IP Address Duplication Error 216

L
LOCK 157
Log View 195

M
Maintenance 101
Maintenance and Inspection 234
MEASURE NOISE 173
Multi-Reader/Writer Operation 113

N
Network Settings 105
Network Settings View 190
Noise Measurement 101
Noise Monitor View 196
Nonfatal Errors 211, 214
Normal RF Tag Communications 98

O
Once 94
Operation Mode 92

P
Password Entry View 188
Product Specifications 27
PROFINET IO Communications Protocol 146

R
READ DATA 155
READ ID 154
Reader/Writer 27, 60
Reader/Writer Controls 100
Reader/Writer Installation Precautions 248
Reader/Writer Operation Errors 215
Reading Device Information 101
Reboot 201
Repeat 95
RESET 100, 179
RESTORE DATA 160
RF Analyzer 111, 197
RF Tag 32, 64
RF Tag Communications 93
RF Tag Communications Errors 219
RF Tag Communications Range (for Reference Only) 236

RF Tag Communications Speed Setting 104
RF Tag Communications Time (for Reference Only) 244
RF Tag Communications View 194
RF Tag Installation Precautions 253
RF Tag Memory Capacities and Memory Types 292
RF Tag Memory Map 293
RF TAG OVERWRITE COUNT CONTROL 159
RFID System Maintenance 108
Run Mode 92

S

Safe Mode 92, 231
SET MULTI-READER/WRITER OPERATION 166, 193
SET RF TAG COMMUNICATIONS 164
Setting Communications Conditions 103
Setting Functions 102
Setting the Web Password 105
Status View 189
Subnet Mask 105
Subnet Mask Setting 105
System Configuration 54
System Error Log 106
System Errors 216

T

Tag Memory Management 98
Time Charts 180
Traveling Mode 116
Troubleshooting Flowcharts 220

V

V680S Command Details 154
V680S Command Errors 218
V680S Commands 151

W

Web Browser Operation Window 186
Web Server 107
WRITE DATA 156
Write Verification 104

Revision History

A manual revision code appears as a suffix to the catalog number at the bottom of the front and rear pages.

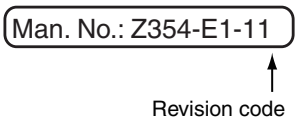

Revision code	Date	Revised contents
01	February 2015	Original production
02	August 2015	Changed model numbers of the recommended cable for Ethernet cable and Power cable, and changed the information for RF Tag Communications Time. and made other minor corrections.
03	September 2015	Added information on RF Tag Communications Time. Made other minor changes.
04	April 2016	Added information on Compliance standards and Frequency to the General Specifications of the Reader/Writer's. Added information on Compliance standards, Ambient operating temperature, Ambient storage humidity, and Dimensions to the General Specifications of the RF Tags. Added the information to the system configuration Changed the information on the mounting bracket of Reader/Writer, V680-D1KP66MT, and V680-D8KF67M. Added information on the delaying and the stopping of the Ethernet packet. Made other minor changes.
05	July 2016	Changed the configuration of the section.
06	October 2016	Change the description of the operating environment of the Web browser. Added the information for "Firmware Version Update History". Changed the information for "Mutual Interference of Reader/Writers (for Reference Only)" of the V680S-HMD63-PNT and V680S-HMD64-PNT.
07	February 2017	Changed the information for "FIFO Repeat".
08	April 2017	Addition of description of communication function "Auto", "FIFO Repeat (Without ID code check)" and "FIFO Repeat (With ID code check)" The layout change of Web browser.
09	July 2019	Changed the description of Java version. Added items for the V680S-A63-S, and V680-A64-S. Deleted items for V680-D8KF67, V680-D8KF67M, and V680-D8KF68A RF Tags,
10	December 2019	Changed the configuration for setting communication conditions (Addition of setting procedure for IP address of the personal computer) Made other minor changes.
11	December 2020	Change of recommended operating environment of Web browser Changes in the appearance and layout of the Web browser interface

Firmware Version Update History

V680S Reader/Writers: The following table gives an update history of the firmware version of the V680S-HMD6□-PNT Series.

Firmware version	Revised contents
3.00	Original production
3.01	Web browser interface can be used in the Java8 update74 or later.
3.02	Addition of communication option “Auto” and “FIFO Repeat (With ID code check)” The layout change of Web browser.
4.00	Change of recommended operating environment of Web browser Changes in the appearance and layout of the Web browser interface

MEMO

OMRON Corporation **Industrial Automation Company**
Tokyo, JAPAN
Contact: www.ia.omron.com

Regional Headquarters
OMRON EUROPE B.V.
Wegalaan 67-69, 2132 JD Hoofddorp
The Netherlands
Tel: (31)2356-81-300/Fax: (31)2356-81-388

OMRON ELECTRONICS LLC
2895 Greenspoint Parkway, Suite 200
Hoffman Estates, IL 60169 U.S.A
Tel: (1) 847-843-7900/Fax: (1) 847-843-7787

OMRON ASIA PACIFIC PTE. LTD.
No. 438A Alexandra Road # 05-05/08 (Lobby 2),
Alexandra Technopark,
Singapore 119967
Tel: (65) 6835-3011/Fax: (65) 6835-2711

OMRON (CHINA) CO., LTD.
Room 2211, Bank of China Tower,
200 Yin Cheng Zhong Road,
PuDong New Area, Shanghai, 200120, China
Tel: (86) 21-5037-2222/Fax: (86) 21-5037-2200

Authorized Distributor:

© OMRON Corporation 2015-2020 All Rights Reserved.
In the interest of product improvement,
specifications are subject to change without notice.

Man. No. Z354-E1-11 1220(0215)