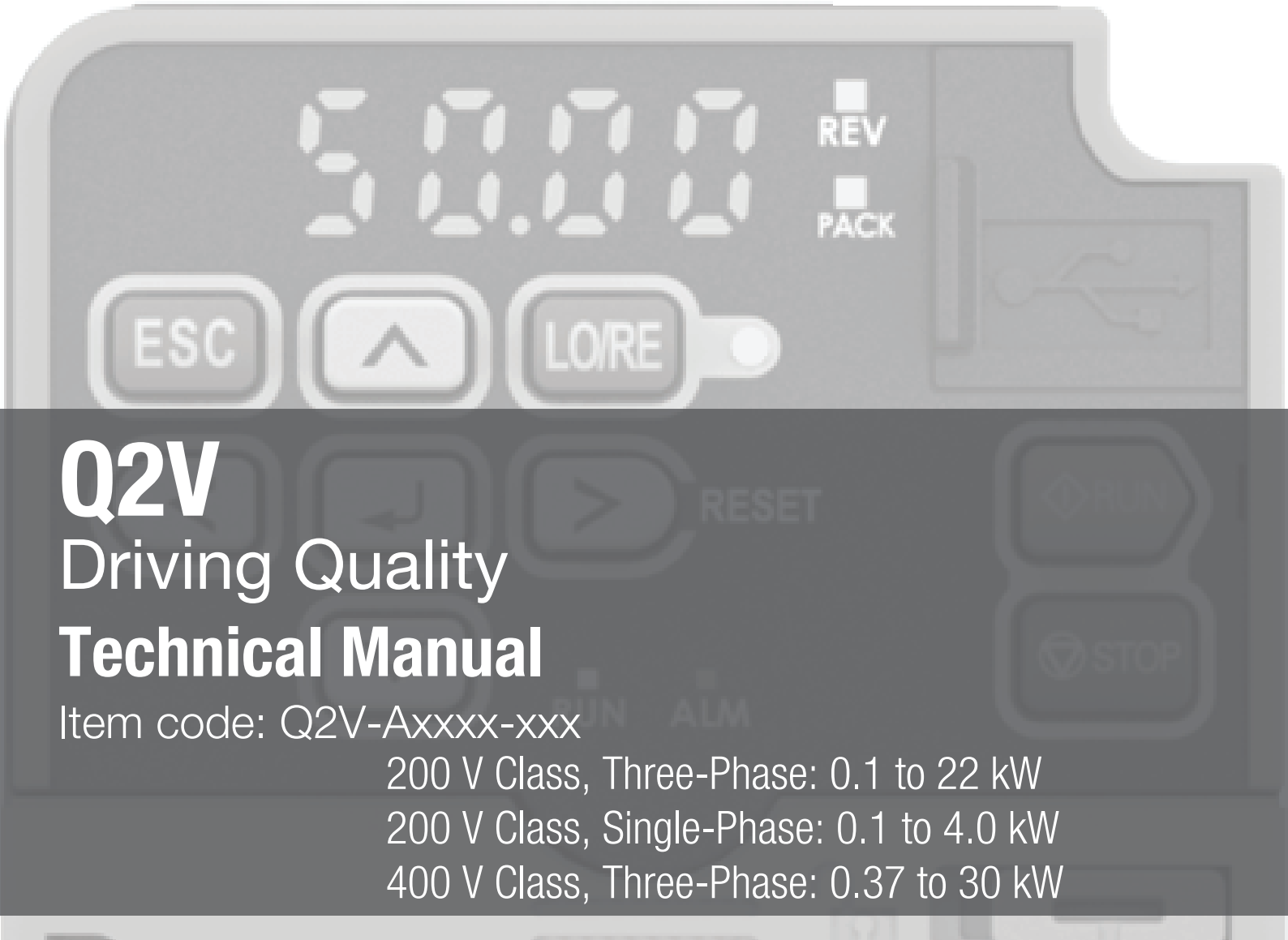

Q2V

Driving Quality

Technical Manual

Item code: Q2V-Axxxx-xxx

200 V Class, Three-Phase: 0.1 to 22 kW
200 V Class, Single-Phase: 0.1 to 4.0 kW
400 V Class, Three-Phase: 0.37 to 30 kW

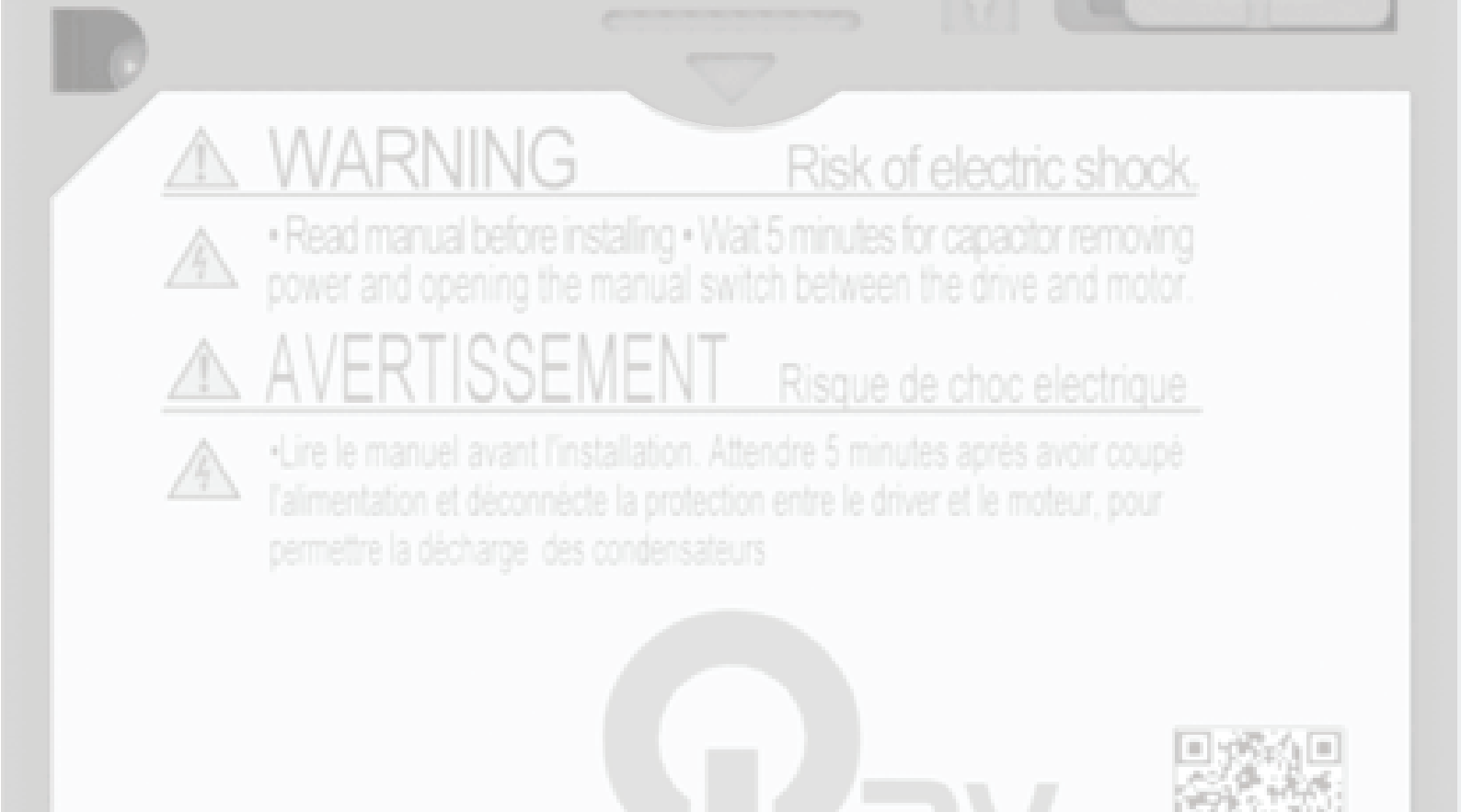

This Page Intentionally Blank

Table of Contents

i. Preface and General Precautions 13
i.1 Safety Information 14
General Safety Precautions 14
Warning Label Content and Location 16
i.2 Legal Information 17
Exclusion of Liability 17
About Registered Trademarks 17
1. Receiving 19
1.1 Model Number and Nameplate Check 20
Nameplate 20
How to Read Model Numbers 20
1.2 Features and Advantages of Control Methods 23
2. Mechanical Installation 27
2.1 Safety Precautions 28
2.2 Installation Environment 29
2.3 Installation Position and Distance 30
2.4 Moving the Drive 32
2.5 Removing/Reattaching Covers 33
Remove the Front Cover 33
Reattach the Front Cover 33
2.6 Remove and Reattach the Keypad 35
Remove the Keypad 35
Reattach the Keypad 35
2.7 Install the Keypad to a Control Panel or Another Device 36
2.8 Installation Methods 37
Standard Installation 37
External Heatsink 37
3. Electrical Installation 39
3.1 Safety Precautions 40
3.2 Standard Connection Diagram 42
3.3 Main Circuit Wiring 45
Motor and Main Circuit Connections 45
Configuration of Main Circuit Terminal Block 46
Main Circuit Terminal Functions 49
Wire Selection 49
Main Circuit Terminal and Motor Wiring 65
3.4 Main Circuit Terminal Block Wiring Procedure 69
Notes on Wiring the Main Circuit Terminal Block 69
Main Circuit Terminal Block Wiring Procedure 70

3.5 Control Circuit Wiring . . . 72
Control Circuit Connection Diagram . . . 72
Control Circuit Terminal Block Functions . . . 73
Control Circuit Terminal Configuration . . . 75
Wiring the Control Circuit Terminal . . . 77
Switches and Jumpers on the Terminal Board . . . 78
3.6 Control I/O Connections . . . 80
Set Sinking Mode/Sourcing Mode . . . 80
Pulse Train Output . . . 80
Set the Input Signal for the MFAI Terminal AI2 . . . 81
Set the Output Signal for the MFAO Terminal AO . . . 82
Switch ON Termination Resistor for Modbus Communications . . . 82
3.7 Connect the Drive to a PC . . . 83
3.8 External Interlock . . . 84
3.9 Braking Resistor Installation . . . 85
Install a Braking Resistor: ERF-Type . . . 85
Install a Braking Resistor Unit: LKEB-Type . . . 85
Dynamic Braking Option Overload Protection . . . 86
3.10 Drive Wiring Protection . . . 87
Installing a Earth Leakage Circuit Breaker (RCM/RCD) . . . 87
Install a Molded-Case Circuit Breaker (MCCB) or Residual Current Monitor/Device (RCM/RCD) . . . 87
3.11 Dynamic Braking Option, Motor Protection . . . 88
Install an Electromagnetic Contactor (MC) at the Input Side of the Drive . . . 88
Install a Thermal Overload Relay on the Drive Output . . . 88
3.12 Improve the Power Factor . . . 90
Connect an AC Reactor . . . 90
Connect a DC Reactor . . . 90
3.13 Prevent Switching Surge . . . 91
3.14 Decrease Noise . . . 92
Connect a Noise Filter to the Input Side (Primary Side) . . . 92
Connect a Noise Filter to the Output Side (Secondary Side) . . . 92
3.15 Protect the Drive during Failures . . . 94
Three-Phase 200 V Class . . . 94
Single-Phase 200 V Class . . . 94
Three-Phase 400 V Class . . . 95
3.16 Wiring Checklist . . . 96
3.17 Motor Application Precautions . . . 98
Precautions for Existing Standard Motors . . . 98
Precautions for PM Motors . . . 99
Precautions for Specialized Motors . . . 99
Notes on the Power Transmission Mechanism . . . 100
4. Startup Procedure and Test Run . . . 101
4.1 Safety Precautions . . . 102
4.2 Component Names and Functions . . . 103
LED Flashing Statuses . . . 104
Keypad Mode and Menu Displays . . . 105
4.3 Set up the Drive with Manual Setup Mode . . . 106
4.4 Drive Mode and Programming Mode . . . 107
Drive Mode . . . 108
Programming Mode . . . 108
Change Parameter Settings . . . 108
Verify and Set the Changed Parameters (Verify Menu) . . . 109

How to Switch between LOCAL and REMOTE . . . 109
4.5 Start-up Procedures . . . 111
Flowchart A: Connect and Run the Motor with Minimal Setting Changes . . . 111
Sub-Chart A-1: Induction Motor Auto-Tuning and Test Run Procedure . . . 112
Sub-Chart A-2: PM Motor Auto-Tuning and Test Run Procedure . . . 112
Sub-Chart A-3: EZ Open Loop Vector Control Test Run Procedure . . . 113
4.6 Items to Check before Starting Up the Drive . . . 115
Check before You Energize the Drive . . . 115
Check after You Energize the Drive . . . 115
4.7 Keypad Operation . . . 116
Digital Character Mapping Table . . . 116
Show the Monitor . . . 116
Check Modified Parameters . . . 116
Set and View Necessary Parameters . . . 117
Change Parameter Settings . . . 117
Save a Backup of Parameters . . . 118
Write Backed-up Parameters to the Drive . . . 119
Verify Keypad Parameters and Drive Parameters . . . 119
Delete Parameters Backed Up to the Keypad . . . 120
4.8 Automatic Parameter Settings Optimized for Specific Applications (Application Presets) . . . 121
4.9 Auto-Tuning . . . 122
Auto-Tuning for Induction Motors . . . 122
Auto-Tuning for PM Motors . . . 123
Auto-Tuning in EZ Open Loop Vector Control Method . . . 124
ASR and Inertia Tuning . . . 125
Precautions before Auto-Tuning . . . 126
4.10 Test Run . . . 128
No-Load Test Run . . . 128
Do a No-Load Test Run . . . 128
Actual-Load Test Run . . . 128
Do an Actual-Load Test Run . . . 129
4.11 Fine Tuning during Test Runs (Adjust the Control Function) . . . 130
V/f Control . . . 130
Open Loop Vector Control Method . . . 130
Fine-Tuning Open Loop Vector Control for PM Motors . . . 132
Advanced Open Loop Vector Control Method for PM . . . 133
EZ Open Loop Vector Control Method . . . 133
4.12 Test Run Checklist . . . 134
5. Standards Compliance . . . 137
5.1 Safety Precautions . . . 138
5.2 European Standards . . . 140
EU Declaration of Conformity . . . 141
CE Low Voltage Directive Compliance . . . 146
EMC Directive . . . 157
5.3 UL Standards . . . 165
Area of Use . . . 165
Wire the Main Circuit Terminal Block . . . 165
Low Voltage Wiring for Control Circuit Terminals . . . 176
Drive Motor Overload and Overheat Protection . . . 176
5.4 对应中国RoHS指令 . . . 177
本产品中含有有害物质的信息 . . . 177
5.5 China RoHS Compliance . . . 178
Information on Hazardous Substances in This Product . . . 178

5.6 Safe Disable Input . . . 179
Safe Disable Specifications . . . 179
Safety Precautions . . . 180
Safe Disable Circuit . . . 180
Connect Safe Disable Input Contacts to Multiple Drives . . . 181
Enabling and Disabling the Drive Output (“Safe Torque Off”) . . . 183
Safe Disable Monitor Output Function and Keypad Display . . . 184
Validating the Safe Disable Function . . . 185

6. Network Communications . . . 187
6.1 Safety Precautions . . . 188
6.2 Field Bus Network Support . . . 189
6.3 Modbus Communications . . . 190
Configure Master/Slave . . . 190
Communication Specifications . . . 190
Communication with the PLC . . . 190
Modbus Drive Operations . . . 192
Communications Timing . . . 192
Message Format . . . 193
Examples of Messages for Commands/Responses . . . 195
Enter Command . . . 199
Self-Diagnostics . . . 199
Communications Data Table . . . 200
Error Codes . . . 211

7. Troubleshooting . . . 213
7.1 Safety Precautions . . . 214
7.2 Types of Faults, Minor Faults, Alarms, and Errors . . . 216
7.3 List of Fault, Minor Fault, Alarm, and Error Codes . . . 217
7.4 Faults . . . 222
7.5 Minor Faults/Alarms . . . 238
7.6 Parameter Setting Errors . . . 247
7.7 Auto-Tuning Errors . . . 251
7.8 Backup Function Operating Mode Display and Errors . . . 255
7.9 Diagnosing and Resetting Faults . . . 257
Fault Occurs Without Power Loss . . . 257
Fault Reset Procedure . . . 257
7.10 Troubleshooting Without Fault Display . . . 258
Typical Problems . . . 258
The Parameter Settings Will Not Change . . . 258
The Motor Does Not Rotate After Entering Run Command . . . 259
The Motor Rotates in the Opposite Direction from the Run Command . . . 260
The Motor Rotates in Only One Direction . . . 260
The Motor Is Too Hot . . . 260
The Correct Auto-Tuning Mode Is Not Available . . . 261
The Motor Stalls during Acceleration or Accel/Decel Time Is Too Long . . . 261
The Drive Frequency Reference Is Different than the Controller Frequency Reference Command . . . 262
The Motor Speed Is Not Stable When Using a PM Motor . . . 262
There Is Too Much Motor Oscillation and the Rotation Is Irregular . . . 262
Deceleration Takes Longer Than Expected When Dynamic Braking Is Enabled . . . 262
The Load Falls When a Brake Is Applied . . . 263
There Is Audible Noise from the Drive or Motor Cables When the Drive Is Energized . . . 263
Residual Current Monitoring/Detection (RCM/RCD) Trips During Run . . . 263
Motor Rotation Causes Unexpected Audible Noise from Connected Machinery . . . 263

Motor Rotation Causes Oscillation or Hunting . . . 263
PID Output Fault . . . 264
The Starting Torque Is Not Sufficient . . . 264
The Motor Rotates after the Drive Output Is Shut Off . . . 264
The Output Frequency Is Lower Than the Frequency Reference . . . 264
The Motor Is Making an Audible Noise . . . 264
The Motor Will Not Restart after a Loss of Power . . . 265

8. Periodic Inspection and Maintenance . . . 267
8.1 Safety Precautions . . . 268
8.2 Inspection . . . 270
Recommended Daily Inspection . . . 270
Recommended Periodic Inspection . . . 270
8.3 Maintenance . . . 272
8.4 Replace Cooling Fans . . . 274
Replace the Cooling Fan . . . 274
Replace the Cooling Fan . . . 276
8.5 Replace the Drive . . . 279
About the Control Circuit Board . . . 279
Replace the Drive . . . 279
8.6 Storage Guidelines . . . 283

9. Disposal . . . 285
9.1 Safety Precautions . . . 286
9.2 Disposal Instructions . . . 287
9.3 WEEE Directive . . . 288

10. Specifications . . . 289
10.1 Safety Precautions . . . 290
10.2 Drive Duty Modes . . . 291
10.3 Model Specifications (Three-Phase 200 V Class) . . . 292
10.4 Model Specifications (Single-Phase 200 V Class) . . . 295
10.5 Model Specifications (Three-Phase 400 V Class) . . . 296
10.6 Drive Specifications . . . 298
10.7 Drive Derating . . . 301
Carrier Frequency Settings and Rated Current Values . . . 301
Derating Depending on Ambient Temperature . . . 303
Altitude Derating . . . 303
10.8 Drive Models and Drive Watt Loss . . . 304
Drive Watt Loss (with Built-in EMC Filter) . . . 304
10.9 Drive Exterior and Mounting Dimensions . . . 307
IP20/UL Open Type (Models B001 to B004, 2001 to 2006) . . . 307
IP20/UL Open Type (Models B006 to B018, 2010 to 2021, 4001 to 4012) . . . 308
IP20/UL Open Type (Models 2030 to 2082, 4018 to 4060) . . . 310
10.10 Peripheral Devices and Options . . . 312

11. Parameter List . . . 313
11.1 How to Read the Parameter List . . . 314
Icons and Terms that Identify Parameters and Control Modes . . . 314
11.2 Parameter Groups . . . 315
11.3 A: INITIALIZATION . . . 316
A1: INITIALIZATION . . . 316
A2: MANUAL SELECTION . . . 317

11.4 b: APPLICATION 318
b1: OPERATION MODE SELECT 318
b2: DC INJ / SHORT CKT BRAKE 319
b3: SPEED SEARCH 319
b4: TIMER 321
b5: PID CONTROL 322
b6: DWELL FUNCTION 325
b8: ENERGY SAVING 325
11.5 C: TUNING 327
C1: ACCEL / DECEL 327
C2: JERK CONTROL 327
C3: SLIP COMPENSATION 328
C4: TORQUE COMPENSATION 329
C5: ASR - SPEED REGULATION 329
C6: DUTY AND CARRIER 330
11.6 d: REFERENCE 331
d1: FREQUENCY REFERENCE 331
d2: REFERENCE LIMITS 332
d3: JUMP FREQUENCY 332
d4: FREQUENCY UP/DOWN 333
d6: FIELD WEAKENING / FORCING 334
d7: OFFSET FREQUENCY 334
11.7 E: MOTOR 335
E1: V/F PARAMETER MOTOR 1 335
E2: MOTOR 1 PARAMETERS 336
E3: V/F PARAMETER MOTOR 2 336
E4: MOTOR 2 PARAMETERS 337
E5: PM MOTOR SETTINGS 338
E9: SIMPLE VECTOR SETTINGS 338
11.8 F: OPTIONS 340
F1: ENCODER 340
F6: COMMUNICATIONS 341
F7: ETHERNET 344
11.9 H: TERMINALS 348
H1: DIGITAL INPUTS 348
H2: DIGITAL OUTPUTS 353
H3: ANALOG INPUTS 358
H4: ANALOG OUTPUTS 360
H5: MODBUS PORTS 361
H6: PULSE INPUT OUTPUT 362
H7: VIRTUAL INPUT OUTPUT 363
11.10 L: PROTECTION 365
L1: MOTOR PROTECTION 365
L2: POWER LOSS RIDE THROUGH 366
L3: STALL PREVENTION 367
L4: SPEED DETECTION 369
L5: FAULT RESTART 369
L6: TORQUE DETECTION 370
L7: TORQUE LIMIT 372
L8: DRIVE PROTECTION 372
11.11 n: SPECIAL 375
n1: HUNTING PREVENTION 375
n2: AFR - AUTO FREQ REGULATION 375
n3: HIGHSLIP/OVEREXCITATION BRAKE 375
n5: FEED FORWARD CONTROL 376
n6: ONLINE TUNING 376
n7: SIMPLE VECTOR TUNING 376

n8: PM MOTOR CONTROL TUNING . . . 377
nA: PM MOTOR CONTROL TUNING . . . 380
11.12 o: KEYPAD . . . 381
o1: KEYPAD DISPLAY . . . 381
o2: KEYPAD OPERATION . . . 383
o3: COPY FUNCTION . . . 384
o4: MAINTENANCE MONITORS . . . 384
o5: DATA LOGGER . . . 385
11.13 q: Q2PACK PARAMETERS . . . 387
q1-01 to q8-40: Q2pack Parameters . . . 387
11.14 r: Q2PACK JOINTS . . . 388
r1: Q2PACK JOINTS . . . 388
11.15 T: AUTOTUNING . . . 389
T0: TUNE MODE . . . 389
T1: INDUCTION MOTOR . . . 389
T2: PM MOTOR . . . 390
T3: ASR . . . 391
T4: SIMPLE VECTOR . . . 391
11.16 U: MONITORS . . . 392
U1: STATUS . . . 392
U2: FAULT . . . 394
U3: FAULT HISTORY . . . 396
U4: MAINTENANCE . . . 396
U5: PID . . . 399
U6: ADVANCED . . . 400
U8: Q2PACK MONITORS . . . 402
11.17 Parameters that Change from the Default Settings with A1-02 [Control Method] . . . 403
11.18 Parameters that Change from the Default Settings with E3-01 [M2 Control Method Selection] . . . 407
11.19 Parameters Changed by E1-03 [V/f Pattern Selection] . . . 408
11.20 Defaults by Drive Model and Duty Rating ND/HD . . . 409
Three-Phase 200 V Class . . . 409
Single-Phase 200 V Class . . . 413
Three-Phase 400 V Class . . . 416
11.21 Parameters Changed by PM Motor Code Selection . . . 421
Yaskawa SMRA Series SPM Motors . . . 421
Yaskawa SMRD Series SPM Motors . . . 422
Yaskawa SSR1 Series IPM Motors (Derated Torque) . . . 423
12. Parameter Details . . . 431
12.1 A: INITIALIZATION . . . 432
A1: INITIALIZATION . . . 432
A2: MANUAL SELECTION . . . 436
Notes for Elevator Applications . . . 437
12.2 b: APPLICATION . . . 444
b1: OPERATION MODE SELECT . . . 444
b2: DC INJ / SHORT CKT BRAKE . . . 454
b3: SPEED SEARCH . . . 456
b4: TIMER . . . 464
b5: PID CONTROL . . . 466
b6: DWELL FUNCTION . . . 482
b8: ENERGY SAVING . . . 483
12.3 C: TUNING . . . 488
C1: ACCEL / DECEL . . . 488

C2: JERK CONTROL . . . 493
C3: SLIP COMPENSATION . . . 494
C4: TORQUE COMPENSATION . . . 498
C5: ASR - SPEED REGULATION . . . 499
C6: DUTY AND CARRIER . . . 504
12.4 d: REFERENCE . . . 508
d1: FREQUENCY REFERENCE . . . 508
d2: REFERENCE LIMITS . . . 514
d3: JUMP FREQUENCY . . . 514
d4: FREQUENCY UP/DOWN . . . 516
d6: FIELD WEAKENING / FORCING . . . 522
d7: OFFSET FREQUENCY . . . 522
12.5 E: MOTOR . . . 524
E1: V/F PARAMETER MOTOR 1 . . . 524
E2: MOTOR 1 PARAMETERS . . . 531
E3: V/F PARAMETER MOTOR 2 . . . 534
E4: MOTOR 2 PARAMETERS . . . 536
E5: PM MOTOR SETTINGS . . . 538
E9: SIMPLE VECTOR SETTINGS . . . 541
12.6 F: OPTIONS . . . 544
F1: ENCODER . . . 544
F6: COMMUNICATIONS, F7: ETHERNET . . . 546
12.7 H: TERMINALS . . . 566
H1: DIGITAL INPUTS . . . 566
MFDI Setting Values . . . 569
H2: DIGITAL OUTPUTS . . . 587
MFDO Setting Value . . . 595
H3: ANALOG INPUTS . . . 609
MFAI Setting Values . . . 614
H4: ANALOG OUTPUTS . . . 619
H5: MODBUS PORTS . . . 621
H6: PULSE INPUT OUTPUT . . . 625
H7: VIRTUAL INPUT OUTPUT . . . 628
12.8 L: PROTECTION . . . 632
L1: MOTOR PROTECTION . . . 632
L2: POWER LOSS RIDE THROUGH . . . 638
L3: STALL PREVENTION . . . 648
L4: SPEED DETECTION . . . 657
L5: FAULT RESTART . . . 659
L6: TORQUE DETECTION . . . 661
L7: TORQUE LIMIT . . . 666
L8: DRIVE PROTECTION . . . 669
12.9 n: SPECIAL . . . 676
n1: HUNTING PREVENTION . . . 676
n2: AFR - AUTO FREQ REGULATION . . . 677
n3: HIGHSLIP/OVEREXCITATION BRAKE . . . 678
n5: FEED FORWARD CONTROL . . . 681
n6: ONLINE TUNING . . . 684
n7: SIMPLE VECTOR TUNING . . . 684
n8: PM MOTOR CONTROL TUNING . . . 686
nA: PM MOTOR CONTROL TUNING . . . 693
12.10 o: KEYPAD . . . 695
o1: KEYPAD DISPLAY . . . 695
o2: KEYPAD OPERATION . . . 702
o3: COPY FUNCTION . . . 706
o4: MAINTENANCE MONITORS . . . 707
o5: DATA LOGGER . . . 710

12.11 T: AUTOTUNING 716
T0: TUNE MODE 716
T1: INDUCTION MOTOR 716
T2: PM MOTOR 719
T3: ASR. 721
T4: SIMPLE VECTOR 721
13. Glossary 725
Index 726
Revision History 734

i

Preface and General Precautions

This chapter gives information about important safety precautions for the use of this product. Failure to obey these precautions can cause serious injury or death, or damage to the product or related devices and systems.

i.1 Safety Information 14
i.2 Legal Information 17

i.1 Safety Information

Read and understand this manual before you install, operate, or do maintenance on the drive. Install the drive as specified by this manual and local codes.

The symbol marks in this section identify safety messages in this manual. Failure to obey these safety messages can cause serious injury, death, or damage to the products and related equipment and systems.

These identifier words categorize and emphasize important safety precautions in these instructions.

⚠DANGER

This signal word identifies a hazard that will cause serious injury or death if you do not prevent it.

⚠WARNING

This signal word identifies a hazard that can cause death or serious injuries if you do not prevent it.

⚠CAUTION

Identifies a hazardous situation, which, if not avoided, can cause minor or moderate injury.

NOTICE

This signal word identifies a property damage message that is not related to personal injury.

◆ General Safety Precautions

- Some figures in the instructions include options and drives without covers or safety shields to more clearly show the inside of the drive. Replace covers and shields before operation. Use options and drives only as specified by the instructions.
- The figures in this manual are examples only. All figures do not apply to all products included in this manual.
- Products, specifications, and content of the instructions can be changed without notice to make the product and/or the instructions better.
- If you damage or lose these instructions, contact a sales representative or the nearest sales office on the rear cover of the manual, and tell them the document number on the front cover to order new copies.

⚠DANGER

Do not ignore the safety messages in this manual.

If you ignore the safety messages in this manual, it will cause serious injury or death. The manufacturer is not responsible for injuries or damage to equipment.

Electrical Shock Hazard

Do not examine, connect, or disconnect wiring on an energized drive. Before servicing, disconnect all power to the equipment and wait for the time specified on the warning label at a minimum. The internal capacitor stays charged after the drive is de-energized. The charge indicator LED extinguishes when the DC bus voltage decreases below 50 Vdc. When all indicators are OFF, measure for dangerous voltages to make sure that the drive is safe.

If you do work on the drive when it is energized, it will cause serious injury or death from electrical shock. The drive has internal capacitors that stay charged after you de-energize the drive.

⚠WARNING

Crush Hazard

Test the system to make sure that the drive operates safely after you wire the drive and set parameters.

If you do not test the system, it can cause damage to equipment or serious injury or death.

Sudden Movement Hazard

Before you do a test run, make sure that the setting values for virtual input and output function parameters are correct. Virtual input and output functions can have different default settings and operation than wired input and output functions.

Incorrect function settings can cause serious injury or death.

Remove all personnel and objects from the area around the drive, motor, and machine and attach covers, couplings, shaft keys, and machine loads before you energize the drive.

If personnel are too close or if there are missing parts, it can cause serious injury or death.

Examine the I/O signals and internal sequence with the engineer who made the Q2pack program before you operate the drive.

If you do not know how the drive will operate, it can cause serious injury or death. When you use Q2pack to make custom programming, the drive I/O terminal functions change from factory settings and the drive will not operate as written in this manual.

Electrical Shock Hazard

Do not modify the drive body or drive circuitry.

Modifications to drive body and circuitry can cause serious injury or death, will cause damage to the drive, and will void the warranty. The manufacturer is not responsible for modifications of the product made by the user.

Only let approved personnel install, wire, maintain, examine, replace parts, and repair the drive.

If personnel are not approved, it can cause serious injury or death.

Do not remove covers or touch circuit boards while the drive is energized.

If you touch the internal components of an energized drive, it can cause serious injury or death.

After the drive blows a fuse or trips an RCM/RCD, do not immediately energize the drive or operate peripheral devices. Wait for the time specified on the warning label at a minimum and make sure that all indicators are OFF. Then check the wiring and peripheral device ratings to find the cause of the problem. If you do not know the cause of the problem, contact the manufacturer before you energize the drive or peripheral devices.

If you do not fix the problem before you operate the drive or peripheral devices, it can cause serious injury or death.

Fire Hazard

Do not use the main circuit power supply (Overvoltage Category III) at incorrect voltages. Operate the drive in the specification range of the input voltage on the drive nameplate.

Voltages that are higher than the permitted nameplate tolerance can cause damage to the drive.

Install sufficient branch circuit short circuit protection as specified by applicable codes and this manual. The drive is suited for circuits that supply not more than 31,000 RMS symmetrical amperes, 240 Vac maximum (200 V Class), 480 Vac maximum (400 V Class).

Incorrect branch circuit short circuit protection can cause serious injury or death.

⚠CAUTION

Crush Hazard

Tighten terminal cover screws and hold the case safely when you move the drive.

If the drive or covers fall, it can cause moderate injury.

NOTICE

Use an inverter-duty motor or vector-duty motor with reinforced insulation and windings applicable for use with an AC drive.

If the motor does not have the correct insulation, it can cause a short circuit or ground fault from insulation deterioration.

When you touch the drive and circuit boards, make sure that you observe correct electrostatic discharge (ESD) procedures.

If you do not follow procedures, it can cause ESD damage to the drive circuitry.

Do not do a withstand voltage test or use a Megger insulation tester on the drive.

These tests can cause damage to the drive.

Do not operate a drive or connected equipment that has damaged or missing parts.

You can cause damage to the drive and connected equipment.

Do not use steam or other disinfectants to fumigate wood for packaging the drive. Use alternative methods, for example heat treatment, before you package the components.

Gas from wood packaging fumigated with halogen disinfectants, for example fluorine, chlorine, bromine, iodine or DOP gas (phthalic acid ester), can cause damage to the drive.

◆ Warning Label Content and Location

The drive warning label is in the location shown in Figure i.1. Use the drive as specified by this information.

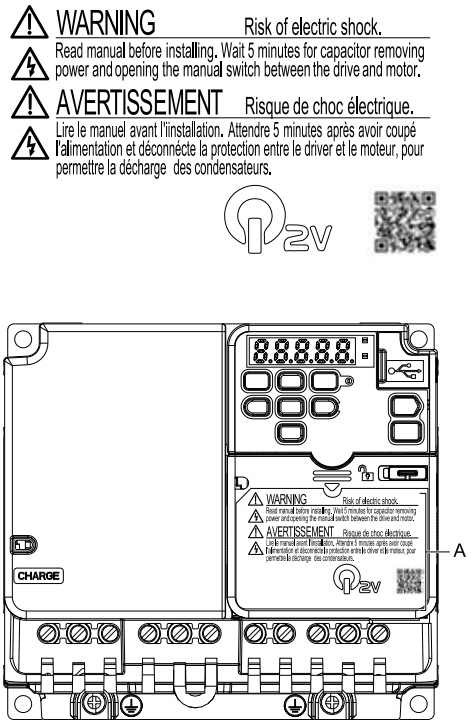

A - Warning label

Figure i.1 Warning Label Content and Location

i.2 Legal Information

◆ Exclusion of Liability

- This product is not designed and manufactured for use in life-support machines or systems.
- Contact your sales representative if you are considering the application of this product for special purposes, such as machines or systems used for passenger cars, medicine, airplanes and aerospace, nuclear power, electric power, or undersea relaying.

⚠WARNING

Injury to Personnel

When you use this product in applications where its failure could cause the loss of human life, a serious accident, or physical injury, you must install applicable safety devices.

If you do not correctly install safety devices, it can cause serious injury or death.

◆ About Registered Trademarks

- CANopen is a registered trademark of CAN in Automation (CIA).
- CC-Link is a registered trademark of CC-Link Partner Association.
- DeviceNet is a registered trademark of Open DeviceNet Vendor Association, Inc. (ODVA).
- EtherCAT is a registered trademark of Beckhoff Automation GmbH.
- EtherNet/IP is a registered trademark of Open DeviceNet Vendor Association, Inc. (ODVA).
- LonWorks and LonTalk are registered trademarks of Echelon Corporation.
- MECHATROLINK-I, MECHATROLINK-II, and MECHATROLINK-III are registered trademarks of MECHATROLINK Members Association (MMA).
- Modbus is a registered trademark of Schneider Electric SA.
- PROFIBUS-DP and PROFINET are registered trademarks of PROFIBUS International.
- Other company names and product names in this document are trademarks or registered trademarks of the respective companies.

1

Receiving

This chapter gives information about the different drive models and features, and how to examine the drive when you receive it.

1.1 Model Number and Nameplate Check 20
1.2 Features and Advantages of Control Methods 23

1.1 Model Number and Nameplate Check

Please examine these items after you receive the drive:

- Examine the drive for damage. Immediately contact the shipping company if the drive is damaged. The warranty does not cover damage from shipping.
- Examine the drive model number to make sure that you received the correct model. Examine the model number in the “MODEL” section of the drive nameplate to make sure that you received the correct model.
- Contact your supplier if you receive the incorrect drive model or if the drive does not operate correctly.

◆ Nameplate

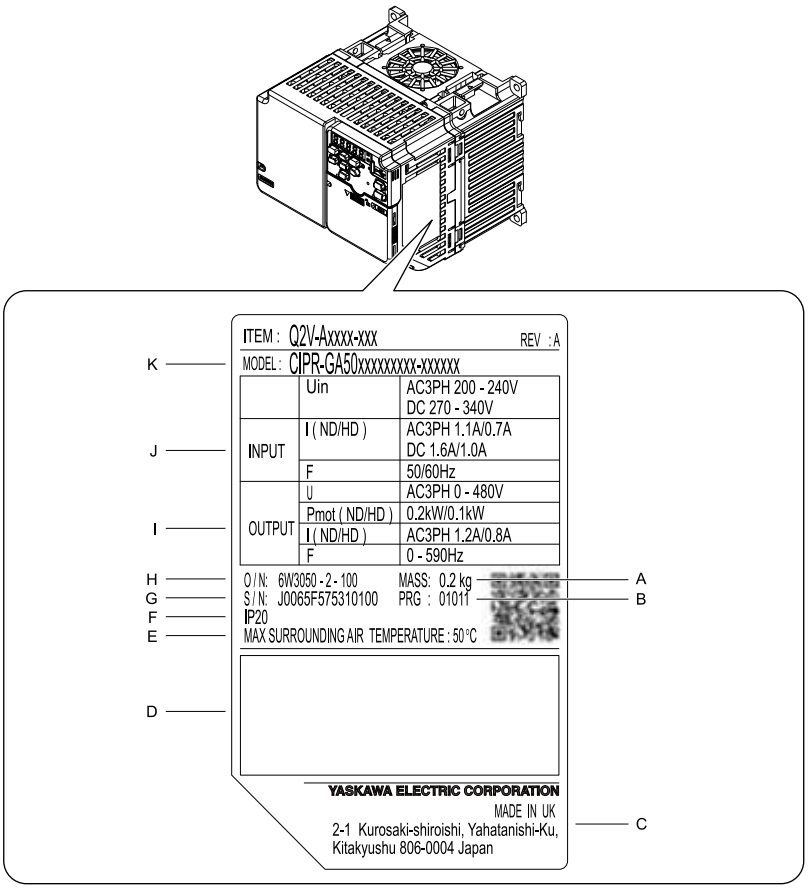

A - Mass
B - Drive software version
C - The address of the head office of the manufacturer
D - Accreditation standards
E - Ambient Temperature Setting
F - Protection design
G - Product number
H - Serial number
I - Output specifications
J - Input specifications
K - Drive model

Figure 1.1 Nameplate Information Example

◆ How to Read Model Numbers

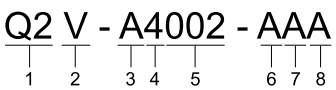

Figure 1.2 Drive model

Table 1.1 Model Number Details

No.	Description
1	Q2 Series
2	V Series

No.	Description
3	A: IP20 protection Class
4	Input power supply voltage • B: Single-Phase AC 200 V Class • 2: Three-Phase AC 200 V Class • 4: Three-Phase AC 400 V Class
5	Rated output current **Note:** Refer to the rated output current list for more information.
6	EMC noise filter • A: Built-in EMC filter • B: Without built-in EMC filter
7	Coating Specification • A: Standard
8	Version

■ Rated Output Current

These output current values are applicable for drives that operate at standard specifications.

- These output current values are applicable for drives that operate at standard specifications.
- Derate the current in applications that:
  - Increase the carrier frequency
  - Have high ambient temperature
  - Install drives side-by-side.
- Use *C6-01 [ND/HD Duty Selection]* to select Normal Duty rating (ND) or Heavy Duty rating (HD).

Table 1.2 Three-Phase AC 200 V Class

Model	HD Rating [C6-01 = 0] (Default)		ND Rating [C6-01 = 1]	
	Maximum Applicable Motor Output kW	Rated output current A	Maximum Applicable Motor Output kW (HP)	Rated output current A
2001	0.1	0.8	0.18	1.2
2002	0.25	1.6	0.37	1.9
2004	0.55	3.0	0.75	3.5
2006	1.1	5.0	1.1	6.0
2008	1.1	6.9	1.5	8.0
2010	1.5	8.0	2.2	9.6
2012	2.2	11.0	3.0	12.2
2018	3.0	17.6	3.7	17.5
2021	4.0	17.6	5.5	21.0
2030	5.5	25.0	7.5	30.0
2042	7.5	33.0	11.0	42.0
2056	11.0	47.0	15.0	56.0
2070	15.0	60.0	18.5	70.0
2082	18.5	75.0	22.0	82.0

Table 1.3 Single-Phase AC 200 V Class

Model	HD Rating [C6-01 = 0] (Default)		ND Rating [C6-01 = 1]	
	Maximum Applicable Motor Output kW	Rated output current A	Maximum Applicable Motor Output kW	Rated output current A
B001	0.1	0.8	0.18	1.2
B002	0.25	1.6	0.37	1.9
B004	0.55	3.0	0.75	3.5
B006	1.1	5.0	1.1	6.0
B010	1.5	8.0	2.2	9.6
B012	2.2	11.0	3.0	12.2
B018	4.0	17.6	-	-

Table 1.4 Three-Phase AC 400 V Class

Model	HD Rating [C6-01 = 0] (Default)		ND Rating [C6-01 = 1]	
	Maximum Applicable Motor Output kW	Rated output current A	Maximum Applicable Motor Output kW	Rated output current A
4001	0.37	1.2	0.37	1.2
4002	0.55	1.8	0.75	2.1
4004	1.1	3.4	1.5	4.1
4005	1.5	4.8	2.2	5.4
4007	2.2	5.6	3.0	7.1
4009	3.0	7.3	4.0	8.9
4012	4.0	9.2	5.5	11.9
4018	5.5	14.8	7.5	17.5
4023	7.5	18.0	11.0	23.4
4031	11.0	24.0	15.0	31.0
4038	15.0	31.0	18.5	38.0
4044	18.5	39.0	22.0	44.0
4060	22.0	45.0	30.0	60.0

1.2 Features and Advantages of Control Methods

This drive has 5 available control methods from which you can select for different applications.

Table 1.5 Features and Advantages of V/f Control

Control Method Selection	Open Loop V/f Control V/f Control)	Notes
Controlled Motor	**Induction Motor**	**-**
Parameter Settings	A1-02 = 0 (Default)	-
Basic Control	V/f	-
Main Applications	General-purpose variable speed control to connect more than one motor to one drive.	-
Maximum Output Frequency	590 Hz	-
Speed Control Range	1:40	This is the range of variable control. When you connect and operate motors in this mode, think about the increase in motor temperature.
Starting Torque	150% / 3 Hz	This is the motor torque that the drive can supply at low speed during start-up and the related output frequency (rotation speed). You must think about drive capacity when a large quantity of torque is necessary at low speed.
Auto-Tuning *1	Rotational and Line-to-Line Resistance (usually not necessary)	Automatically tunes electrical motor parameters.
Torque Limits	No	Controls maximum motor torque to prevent damage to machines and loads.
Speed Search *1	Yes	Immediately estimates (or detects) motor speed and direction when coasting to a stop to quickly start-up the drive without stopping the motor.
Automatic Energy-saving Control *1	Yes	Automatically adjusts the voltage that the drive applies to the motor to maximize motor efficiency for small and large loads.
High Slip Braking (HSB) *1	Yes	Increases motor loss to let the motor decelerate faster than usual without a braking resistor. Motor characteristics have an effect on this function.
Feed Forward Control	No	Compensates effects of the system inertia to increase the speed precision when the load changes.
KEB Ride-Thru Function *1	Yes	Quickly and safely stops the motor during power loss and automatically starts operation at the previous speed when the drive applies power again without coasting the motor.
Overexcitation Deceleration *1	Yes	Sets the V/f higher than the setting value during deceleration to increase motor loss and decrease deceleration time.
Overvoltage Suppression Function *1 *2	Yes	Adjusts speed during regeneration to prevent overvoltage.

*1 Note these points when you use this function:

- When you can decouple the motor and machine for a test run, use Rotational Auto-Tuning. You must make adjustments to the control in the range where there is no vibration in the machine after Rotational Auto-Tuning.
- Motor loss increases during overexcitation braking and high-slip braking. Use a maximum braking frequency of 5% ED and a maximum braking time of 90 seconds. After you start high-slip braking, you cannot restart the motor until it stops. Use overexcitation braking to decelerate over a shorter time at a pre-determined speed.

*2 Do not use this function with hoist application.

Table 1.6 Features and Advantages of OLV Control

Control Method Selection	Open Loop Vector (OLVector)	Notes
Controlled Motor	**Induction Motor**	**-**
Parameter Settings	A1-02 = 2	-
Basic Control	Open Loop Current Vector Control	-
Main Applications	• General-purpose variable speed control • Applications in which high performance is necessary without machine encoders	-
Maximum Output Frequency	590 Hz	-
Speed Control Range	1:100	This is the range of variable control. When you connect and operate motors in this mode, think about the increase in motor temperature.
Starting Torque	150% / 1 Hz *1	This is the motor torque that the drive can supply at low speed during start-up and the related output frequency (rotation speed). You must think about drive capacity when a large quantity of torque is necessary at low speed.

Control Method Selection	Open Loop Vector (OLVector)	Notes
Controlled Motor	**Induction Motor**	**-**
Auto-Tuning *2	Rotational, Stationary, and Line-to-Line Resistance	Automatically tunes electrical motor parameters.
Torque Limits *2	Yes	Controls maximum motor torque to prevent damage to machines and loads.
Speed Search *2	Yes	Immediately estimates (or detects) motor speed and direction when coasting to a stop to quickly start-up the drive without stopping the motor.
Automatic Energy-saving Control *2	Yes	Automatically adjusts the voltage that the drive applies to the motor to maximize motor efficiency for small and large loads.
High Slip Braking (HSB)	No	Increases motor loss to let the motor decelerate faster than usual without a braking resistor. Motor characteristics have an effect on this function.
Feed Forward Control	No	Compensates effects of the system inertia to increase the speed precision when the load changes.
KEB Ride-Thru Function *2	Yes	Quickly and safely stops the motor during power loss and automatically starts operation at the previous speed when the drive applies power again without coasting the motor.
Overexcitation Deceleration *2	Yes	Sets the V/f higher than the setting value during deceleration to increase motor loss and decrease deceleration time.
Overvoltage Suppression Function *2 *3	Yes	Adjusts speed during regeneration to prevent overvoltage.

*1 Select the drive capacity accordingly.

*2 Note these points when you use this function:

- When you can decouple the motor and machine for a test run, use Rotational Auto-Tuning. You must make adjustments to the control in the range where there is no vibration in the machine after Rotational Auto-Tuning.
- For vector control, use a 1:1 drive to motor ratio. You cannot use vector control when more than one motor is connected to one drive. Select a drive capacity so that the motor rated current is 50% to 100% of the drive rated current. If the carrier frequency is too high, the drive rated current is derated.
- Motor loss increases during overexcitation braking and high-slip braking. Use a maximum braking frequency of 5% ED and a maximum braking time of 90 seconds. After you start high-slip braking, you cannot restart the motor until it stops. Use overexcitation braking to decelerate over a shorter time at a pre-determined speed.
- Acceleration and deceleration have priority over torque limits in Open Loop Vector Control during acceleration and deceleration (soft start changes). The drive will not operate until the speed is at the minimum frequency or the reverse direction of motor rotation when the motor speed decreases because of torque limits during constant speed control. Set *L7-07 = 2 [TrqLimit@Acc/Decel = I-ctrl@Ac/Dec]* to enable torque limits during acceleration/deceleration (for winding applications).

*3 Do not use this function with hoist application.

Table 1.7 Features and Advantages of OLV/PM, AOLV/PM, and EZOLV Control

Control Method Selection	PM Open Loop Vector Control (PM OLVector)	PM Advanced Open Loop Vector (PM AOLVector)	EZ Open Loop Vector Control (EZ Vector)	Notes
Controlled Motor	**PM Motor**		**Induction Motors/PM Motors/ SynRM (Synchronous Reluctance Motors)**	**-**
Parameter Settings	A1-02 = 5	A1-02 = 6	A1-02 = 8	-
Basic Control	PM Open Loop Vector Control (no speed controller)	PM Open Loop Current Vector Control (with speed controller)	Open Loop Current Vector Control	-
Main Applications	• General-purpose variable speed control for PM motors • Applications in which a high level of responsiveness and accurate speed control are not necessary.	• General-purpose variable speed control for IPM motors • Applications in which high-precision speed control and torque limits are necessary.	Low-speed torque applications Example: Fans and pumps	-
Maximum Output Frequency	590 Hz	270 Hz	120 Hz	-
Speed Control Range	1:10	1:10 1:100 *1 *2	1:10	This is the range of variable control. When you connect and operate motors in this mode, think about the increase in motor temperature.
Starting Torque	100% / 5% speed	100% / 5% speed 100% / 0 min^{-1} *1	100% / 10% speed	This is the motor torque that the drive can supply at low speed during start-up and the related output frequency (rotation speed). You must think about drive capacity when a large quantity of torque is necessary at low speed.
Auto-Tuning *4	Stationary, Stator Resistance, Rotational	Stationary, Stator Resistance, Rotational	Line-to-Line Resistance	Automatically tunes electrical motor parameters.
Torque Limits *4	No	Yes	Yes	Controls maximum motor torque to prevent damage to machines and loads.

Control Method Selection	PM Open Loop Vector Control (PM OLVector)	PM Advanced Open Loop Vector (PM AOLVector)	EZ Open Loop Vector Control (EZ Vector)	Notes
Controlled Motor	**PM Motor**		**Induction Motors/PM Motors/ SynRM (Synchronous Reluctance Motors)**	**-**
Speed Search *4	Yes	Yes	Yes (Although NOT operation in the reverse direction of the Run command)	Immediately estimates (or detects) motor speed and direction when coasting to a stop to quickly start-up the drive without stopping the motor.
Automatic Energy-saving Control *4	No	Yes (IPM motors only)	Yes	Automatically adjusts the voltage that the drive applies to the motor to maximize motor efficiency for small and large loads.
High Slip Braking (HSB)	No (induction motor-specific function)	No (induction motor-specific function)	No	Increases motor loss to let the motor decelerate faster than usual without a braking resistor. Motor characteristics have an effect on this function.
Feed Forward Control *4	No	Yes	No	Compensates effects of the system inertia to increase the speed precision when the load changes.
KEB Ride-Thru Function *4	Yes	Yes	Yes	Quickly and safely stops the motor during power loss and automatically starts operation at the previous speed when the drive applies power again without coasting the motor.
Overexcitation Deceleration	No (induction motor-specific function)	No (induction motor-specific function)	No	Sets the V/f higher than the setting value during deceleration to increase motor loss and decrease deceleration time.
Overvoltage Suppression Function *4 *5	Yes	Yes	Yes	Adjusts speed during regeneration to prevent overvoltage.

*1 Enabled when *n8-57 = 1 [High-Freq Injection = Enabled]*.
*2 Rotational Auto-Tuning is necessary.
*3 Select the drive capacity accordingly.
*4 Note these points when you use this function:

- When you can decouple the motor and machine for a test run, use Rotational Auto-Tuning. You must make adjustments to the control in the range where there is no vibration in the machine after Rotational Auto-Tuning.
- For vector control, use a 1:1 drive to motor ratio. You cannot use vector control when more than one motor is connected to one drive. Select a drive capacity so that the motor rated current is 50% to 100% of the drive rated current. If the carrier frequency is too high, the drive rated current is derated.

*5 Do not use this function with hoist application.

2

Mechanical Installation

This chapter gives information about the correct environment or space to install the drive.

2.1 Safety Precautions 28
2.2 Installation Environment 29
2.3 Installation Position and Distance 30
2.4 Moving the Drive 32
2.5 Removing/Reattaching Covers 33
2.6 Remove and Reattach the Keypad 35
2.7 Install the Keypad to a Control Panel or Another Device 36
2.8 Installation Methods 37

2.1 Safety Precautions

⚠WARNING

Electrical Shock Hazard

Only let approved personnel install, wire, maintain, examine, replace parts, and repair the drive.

If personnel are not approved, it can cause serious injury or death.

Do not modify the drive body or drive circuitry.

Modifications to drive body and circuitry can cause serious injury or death, will cause damage to the drive, and will void the warranty. The manufacturer is not responsible for modifications of the product made by the user.

Fire Hazard

Do not put flammable or combustible materials on top of the drive and do not install the drive near flammable or combustible materials. Attach the drive to metal or other noncombustible material.

Flammable and combustible materials can start a fire and cause serious injury or death.

When you install the drive in an enclosure, use a cooling fan or cooler to decrease the temperature around the drive. Make sure that the intake air temperature to the drive is 50 °C (122 °F) or less for IP20/UL Open Type drives, and 40 °C (104 °F) or less for IP20/UL Type 1 drives.

If the air temperature is too hot, the drive can become too hot and cause a fire and serious injury or death.

⚠CAUTION

Crush Hazard

Tighten terminal cover screws and hold the case safely when you move the drive.

If the drive or covers fall, it can cause moderate injury.

NOTICE

Do not let unwanted objects, for example metal shavings or wire clippings, fall into the drive during drive installation. Put a temporary cover over the drive during installation. Remove the temporary cover before start-up.

Unwanted objects inside of the drive can cause damage to the drive.

Obey correct electrostatic discharge (ESD) procedures when you touch the drive.

Incorrect ESD procedures can cause damage to the drive circuitry.

Install vibration-proof rubber on the base of the motor or use the frequency jump function in the drive to prevent specific frequencies that vibrate the motor.

Motor or system resonant vibration can occur in fixed speed machines that are converted to variable speed. Too much vibration can cause damage to equipment.

You can use the drive with an explosion-proof motor, but the drive is not explosion-proof. Install the drive only in the environment shown on the nameplate.

If you install the drive in a dangerous environment, it can cause damage to the drive.

Do not lift the drive with the covers removed.

If the drive does not have covers, you can easily cause damage to the internal parts of the drive.

2.2 Installation Environment

The installation environment is important for the lifespan of the product and to make sure that the drive performance is correct. Make sure that the installation environment agrees with these specifications.

Environment	Conditions
Area of Use	Indoors
Power Supply	Overvoltage Category III (IEC60664)
Ambient Temperature Setting	IP20/UL Open Type: -10 °C to +50 °C (14 °F to 122 °F) IP20/UL Type 1: -10 °C to +40 °C (14 °F to 104 °F) • When installing the drive in an enclosure, use a cooling fan or air conditioner to keep the internal air temperature in the permitted range. • Do not let the drive freeze.
Humidity	95%RH or less Do not let condensation form on the drive.
Storage Temperature	-20 °C to +70 °C (-4 °F to +158 °F) (short-term temperature during transportation)
Surrounding Area	Pollution degree 2 or less (IEC 60664-1) Install the drive in an area without: • Oil mist, corrosive or flammable gas, or dust • Metal powder, oil, water, or other unwanted materials • Radioactive or flammable materials. • Harmful gas or fluids • Salt • Direct sunlight Keep wood and other flammable materials away from the drive.
Altitude	1000 m (3281 ft) Maximum **Note:** Derate the output current by 1% for each 100 m (328 ft) to install the drive in altitudes between 1000 to 4000 m (3281 to 13123 ft). It is not necessary to derate the rated voltage in these conditions: • Installing the drive at 2000 m (6562 ft) or lower • Installing the drive between 2000 to 4000 m (6562 to 13123 ft) and grounding the neutral point on the power supply. Contact the manufacturer or your nearest sales representative when not grounding the neutral point.
Vibration	• 10 Hz to 20 Hz: 1 G (9.8 m/s^2, 32.15 ft/s^2) • 20 Hz to 55 Hz: 0.6 G (5.9 m/s^2, 19.36 ft/s^2)
Installation Orientation	Install the drive vertically for sufficient airflow to cool the drive.

NOTICE: *Do not put drive peripheral devices, transformers, or other electronics near the drive. Shield the drive from electrical interference if components must be near the drive. Components near the drive can cause incorrect drive operation from electrical interference.*

NOTICE: *Do not let unwanted objects, for example metal shavings or wire clippings, fall into the drive during drive installation. Put a temporary cover over the drive during installation. Remove the temporary cover before start-up. Unwanted objects inside of the drive can cause damage to the drive.*

2.3 Installation Position and Distance

Install the drive vertically for sufficient airflow to cool the drive.

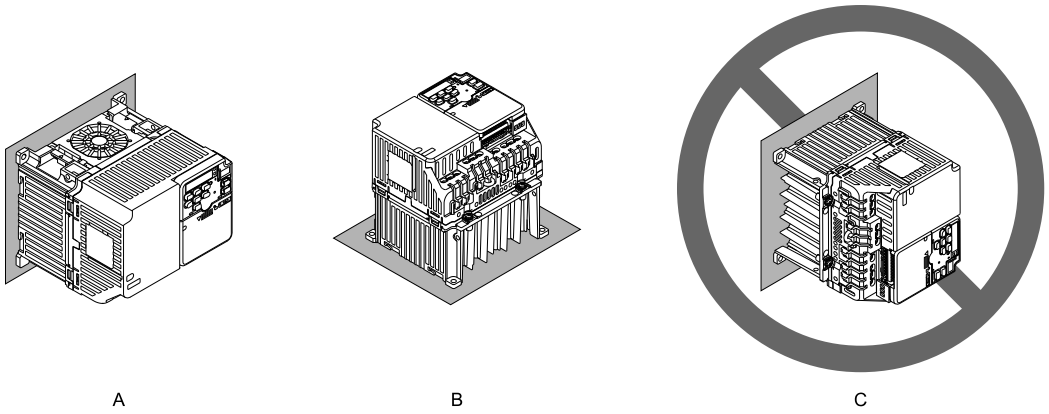

A - Vertical installation
B - Horizontal installation
C - Rotated installation

Figure 2.1 Installation Orientation

◆ Single Drive Installation

Use the clearances specified to install the drive. Make sure that there is sufficient space for wiring and airflow.

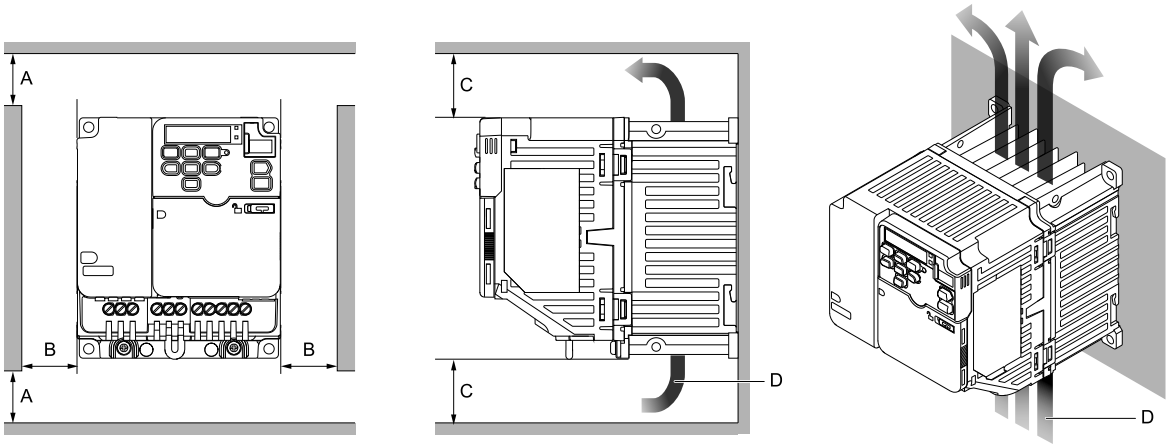

A - 50 mm (2 in) minimum between upper and lower openings
B - 30 mm (1.18 in) minimum on each side
C - 100 mm (3.94 in) minimum above and below
D - Airflow direction

Figure 2.2 Installation Distances for One Drive

◆ Install Drives Side-by-Side

When you install drives side-by-side, set to *L8-35 = 1 [Installation Selection = Side-by-Side Mounting]*.
Refer to *Derating Depending on Ambient Temperature on page 303* and set derating depending on ambient temperature.

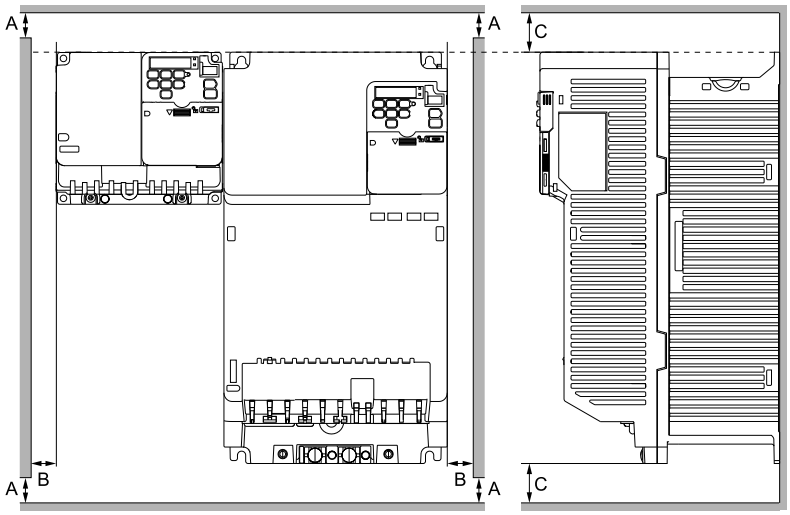

A - 50 mm (1.97 in) minimum between upper and lower openings

B - 30 mm (1.18 in) minimum on each side

C - 100 mm (3.94 in) minimum above and below

Figure 2.3 Installation Distances for More than One Drive (Side-by-Side)

Note:

When you replace the cooling fans, align the tops of drives that have different dimensions. You can easily replace the cooling fan.

2.4 Moving the Drive

Obey local laws and regulations when moving and installing this product.

CAUTION! *Sudden Movement Hazard. Do not hold the drive by the keypad or front cover. Tighten the screws correctly before moving the drive. Failure to obey can cause minor to moderate injury.*

2.5 Removing/Reattaching Covers

DANGER! *Electrical Shock Hazard. Do not examine, connect, or disconnect wiring on an energized drive. Before servicing, disconnect all power to the equipment and wait for the time specified on the warning label at a minimum. The internal capacitor stays charged after the drive is de-energized. The charge indicator LED extinguishes when the DC bus voltage decreases below 50 Vdc. When all indicators are OFF, measure for dangerous voltages to make sure that the drive is safe. If you do work on the drive when it is energized, it will cause serious injury or death from electrical shock. The drive has internal capacitors that stay charged after you de-energize the drive.*

◆ Remove the Front Cover

1. Use a slotted screwdriver to unlock the front cover of the drive.

   Use a slotted screwdriver with a tip width of 2.5 mm (0.1 in) or less and a thickness of 0.4 mm (0.02 in) or less.

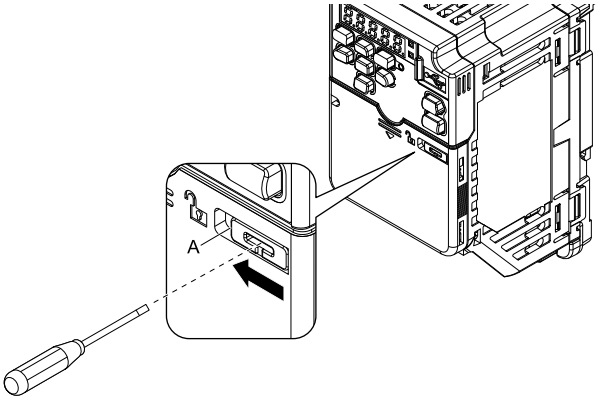

A - Front Cover Lock

Figure 2.4 Unlocking

2. Slide the front cover down and remove it from the drive.

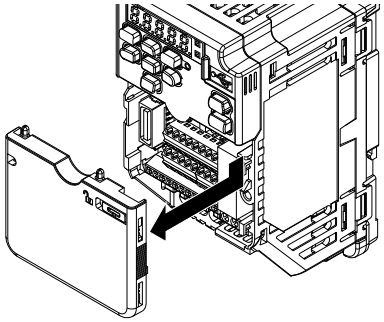

Figure 2.5 Remove the Front Cover

◆ Reattach the Front Cover

1. Reverse the steps to reattach the cover.

Note:
Make sure that you do not pinch wires or signal lines between the front cover and the drive before you reattach the cover.

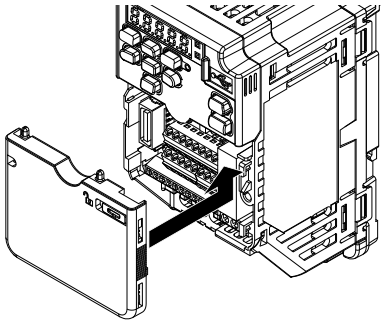

Figure 2.6 Reattach the Front Cover

2. Use a slotted screwdriver to lock the front cover of the drive.

   Use a slotted screwdriver with a tip width of 2.5 mm (0.1 in) or less and a thickness of 0.4 mm (0.02 in) or less.

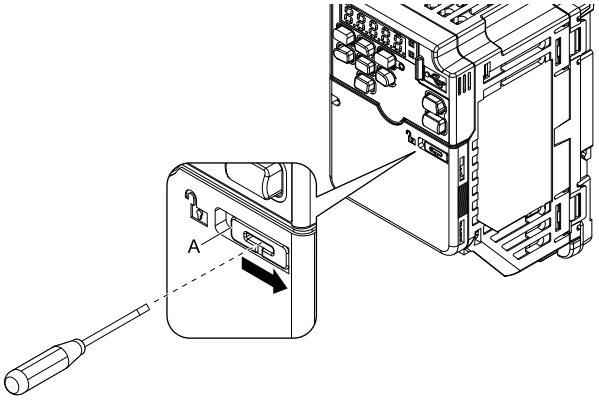

A - Front Cover Lock

Figure 2.7 Locking the Front Cover

2.6 Remove and Reattach the Keypad

◆ Remove the Keypad

Remove the front cover.

Push on the tab on the right side of the keypad, then pull the keypad forward to remove it from the drive.

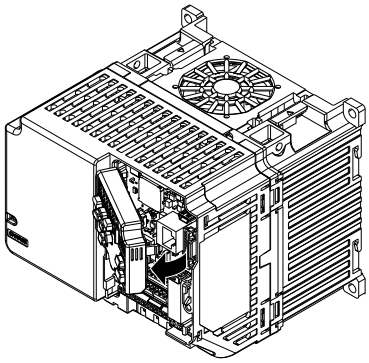

Figure 2.8 Remove the Keypad

◆ Reattach the Keypad

Push in the keypad from the front until the hooks click into place.

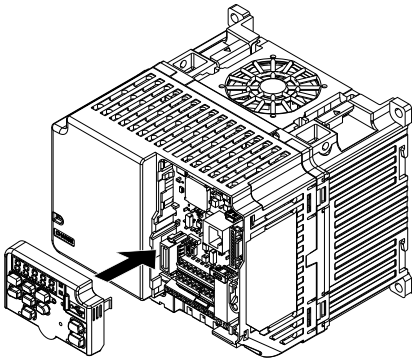

Figure 2.9 Reattach the Keypad

Attach the front cover.

2.7 Install the Keypad to a Control Panel or Another Device

You can remove the keypad from the drive and connect it to a remote control extension cable to make operation easier when you cannot access the drive. You can operate a drive that is in a control panel without opening or closing the control panel door. To order optional accessories, contact the manufacturer or your nearest sales representative.

Name	Model	Intended Use
Extension Cable	1 m: WV001 3 m: WV003	To connect the keypad and drive. This option is an RJ-45, 8-pin straight-through UTP CAT5e cable.
Installation Support Set A	900-192-933-001	To attach the keypad to the control panel. This option uses screws.
Installation Support Set B	900-192-933-002	To attach the keypad to the control panel. This option uses nut clamps. Use this option when weld studs are located in the control panel.

2.8 Installation Methods

The drive installation methods include standard installation and external heatsink installation.

◆ Standard Installation

Refer to *Drive Exterior and Mounting Dimensions on page 307* for more information about external dimensions.

◆ External Heatsink

The optional External Heatsink Installation Kit will let you install the drive with the heatsink external to the enclosure panel.

This table shows the model number for the attachment. Contact the manufacturer or your nearest sales representative to order mounting brackets and mounting hardware.

Table 2.1 External Heatsink Installation Kit

Drive Model	Model	Drive Model	Model
2001	ZPSA-GA50V1-1	B006	ZPSA-GA50V2-2
2002		B010	ZPSA-GA50V2-3
2004	ZPSA-GA50V1-2	B012	ZPSA-GA50V3-1
2006	ZPSA-GA50V1-3	B018	ZPSA-GA50V4-1
2008	ZPSA-GA50V2-3	4001	ZPSA-GA50V2-1
2010		4002	ZPSA-GA50V2-2
2012		4004	
2018	ZPSA-GA50V3-1	4005	ZPSA-GA50V2-3
2021		4007	
2030	ZPSA-GA50V5-1	4009	
2042		4012	ZPSA-GA50V3-1
2056	ZPSA-GA50V6-1	4018	ZPSA-GA50V5-1
2070	ZPSA-GA50V7-1	4023	
2082		4031	ZPSA-GA50V6-1
B001	ZPSA-GA50V1-1	4038	
B002		4044	ZPSA-GA50V8-1
B004	ZPSA-GA50V1-2	4060	

3

Electrical Installation

This chapter gives how to wire the control circuit terminals, motor, and power supply of the drive.

3.1 Safety Precautions 40
3.2 Standard Connection Diagram 42
3.3 Main Circuit Wiring 45
3.4 Main Circuit Terminal Block Wiring Procedure 69
3.5 Control Circuit Wiring 72
3.6 Control I/O Connections 80
3.7 Connect the Drive to a PC 83
3.8 External Interlock 84
3.9 Braking Resistor Installation 85
3.10 Drive Wiring Protection 87
3.11 Dynamic Braking Option, Motor Protection 88
3.12 Improve the Power Factor 90
3.13 Prevent Switching Surge 91
3.14 Decrease Noise 92
3.15 Protect the Drive during Failures 94
3.16 Wiring Checklist 96
3.17 Motor Application Precautions 98

3.1 Safety Precautions

⚠DANGER

Electrical Shock Hazard

Do not examine, connect, or disconnect wiring on an energized drive. Before servicing, disconnect all power to the equipment and wait for the time specified on the warning label at a minimum. The internal capacitor stays charged after the drive is de-energized. The charge indicator LED extinguishes when the DC bus voltage decreases below 50 Vdc. When all indicators are OFF, measure for dangerous voltages to make sure that the drive is safe.

If you do work on the drive when it is energized, it will cause serious injury or death from electrical shock. The drive has internal capacitors that stay charged after you de-energize the drive.

⚠WARNING

Electrical Shock Hazard

Do not operate the drive when covers are missing. Replace covers and shields before you operate the drive. Use the drive only as specified by the instructions.

Some figures in this section include drives without covers or safety shields to more clearly show the inside of the drive. If covers or safety shields are missing from the drive, it can cause serous injury or death.

Ground the neutral point on the power supply of the drive to comply with the EMC Directive before you turn on the EMC filter or if there is high resistance grounding.

If the EMC filter is switched ON without the neutral point being grounded or if there is high resistance grounding, it can cause death or serious injury.

Make sure that the protective ground wire conforms to technical standards and local safety regulations. The IEC/EN 61800-5-1:2007 standard specifies that you must wire the power supply to automatically de-energize when the protective ground wire disconnects. If you turn on the internal EMC filter, the leakage current of the drive will be more than 3.5 mA. You can also connect a protective ground wire that has a minimum cross-sectional area of 10 mm^2 (copper wire).

If you do not obey the standards and regulations, it can cause serious injury or death.

When there is a DC component in the protective earthing conductor, the drive can cause a residual current. When a residual current operated protective or monitoring device prevents direct or indirect contact, always use a type B Residual Current Monitor/Residual Current Device (RCM/RCD) as specified by IEC/EN 60755.

If you do not use the correct RCM/RCD, it can cause serious injury or death.

Do not wear loose clothing or jewelry when you do work on the drive. Tighten loose clothing and remove all metal objects, for example watches or rings.

Loose clothing can catch on the drive and jewelry can conduct electricity and cause serious injury or death.

Do not remove covers or touch circuit boards while the drive is energized.

If you touch the internal components of an energized drive, it can cause serious injury or death.

Only let approved personnel install, wire, maintain, examine, replace parts, and repair the drive.

If personnel are not approved, it can cause serious injury or death.

Do not modify the drive body or drive circuitry.

Modifications to drive body and circuitry can cause serious injury or death, will cause damage to the drive, and will void the warranty. The manufacturer is not responsible for modifications of the product made by the user.

Fire Hazard

Tighten all terminal screws to the correct tightening torque.

Connections that are too loose or too tight can cause incorrect operation and damage to the drive. Incorrect connections can also cause death or serious injury from fire.

Tighten screws at an angle in the specified range shown in this manual.

If you tighten the screws at an angle not in the specified range, you can have loose connections that can cause damage to the terminal block or start a fire and cause serious injury or death.

⚠WARNING

Do not use the main circuit power supply (Overvoltage Category III) at incorrect voltages. Operate the drive in the specification range of the input voltage on the drive nameplate.

Voltages that are higher than the permitted nameplate tolerance can cause damage to the drive.

When you install a dynamic braking option, wire the components as specified by the wiring diagrams.

Incorrect wiring can cause damage to braking components or serious injury or death.

NOTICE

Do not let unwanted objects, for example metal shavings or wire clippings, fall into the drive during drive installation. Put a temporary cover over the drive during installation. Remove the temporary cover before start-up.

Unwanted objects inside of the drive can cause damage to the drive.

Obey correct electrostatic discharge (ESD) procedures when you touch the drive.

Incorrect ESD procedures can cause damage to the drive circuitry.

Select a motor that is compatible with the load torque and speed range. When 100% continuous torque is necessary at low speed, use an inverter-duty motor or vector-duty motor. When you use a standard fan-cooled motor, decrease the motor torque in the low-speed range.

If you operate a standard fan-cooled motor at low speed and high torque, it will decrease the cooling effects and can cause heat damage.

Obey the speed range specification of the motor as specified by the manufacturer. When you must operate the motor outside of its specifications, contact the motor manufacturer.

If you continuously operate oil-lubricated motors outside of the manufacturer specifications, it can cause damage to the motor bearings.

When the input voltage is 440 V or higher or the wiring distance is longer than 100 m (328 ft), make sure that the motor insulation voltage is sufficient or use an inverter-duty motor or vector-duty motor with reinforced insulation.

Motor winding and insulation failure can occur.

Before you connect a dynamic braking option to the drive, make sure that qualified personnel read and obey the Braking Unit and Braking Resistor Unit Installation Manual (TOBPC72060001).

If you do not read and obey the manual or if personnel are not qualified it can cause damage to the drive and braking circuit.

Make sure that all connections are correct after you install the drive and connect peripheral devices.

Incorrect connections can cause damage to the drive.

Note:

- Torque characteristics differ compared to operating the motor directly from line power. The user should have a full understanding of the load torque characteristics for the application.
- The rated input current of submersible motors is higher than the rated input current of standard motors. Carefully select the correct drive capacity. When the distance between the motor and drive is long, use a wire that can connect the motor to the drive without a reduction in motor torque.
- Do not use unshielded wire for control wiring. Use shielded, twisted-pair wires and ground the shield to the ground terminal of the drive. Unshielded wire can cause electrical interference and unsatisfactory system performance.

3.2 Standard Connection Diagram

Wire the drive as specified by Figure 3.1.

WARNING! *Sudden Movement Hazard. Set the MFDI parameters before you close control circuit switches. Incorrect Run/Stop circuit sequence settings can cause serious injury or death from moving equipment.*

WARNING! *Sudden Movement Hazard. Correctly wire the start/stop and safety circuits before you energize the drive. If you momentarily close a digital input terminal, it can start a drive that is programmed for 3-Wire control and cause serious injury or death from moving equipment.*

WARNING! *Sudden Movement Hazard. When you use a 3-Wire sequence, set A1-03 = 3330 [Init Parameters = 3-Wire Initialization] and make sure that b1-17 = 1 [RUN@PowerUp Selection = Disregard RUN] (default). If you do not correctly set the drive parameters for 3-Wire operation before you energize the drive, the motor can suddenly rotate in reverse when you energize the drive.*

NOTICE: *Fire Hazard. Install sufficient branch circuit short circuit protection as specified by applicable codes and this manual. The drive is suited for circuits that supply not more than 31,000 RMS symmetrical amperes, 240 Vac maximum (200 V Class), 480 Vac maximum (400 V Class). Incorrect branch circuit short circuit protection can cause serious injury or death.*

NOTICE: *When the input voltage is 440 V or higher or the wiring distance is longer than 100 m (328 ft), make sure that the motor insulation voltage is sufficient or use an inverter-duty motor or vector-duty motor with reinforced insulation. Motor winding and insulation failure can occur.*

NOTICE: *Do not connect the AC control circuit ground to the drive enclosure. Failure to obey can cause incorrect control circuit operation.*

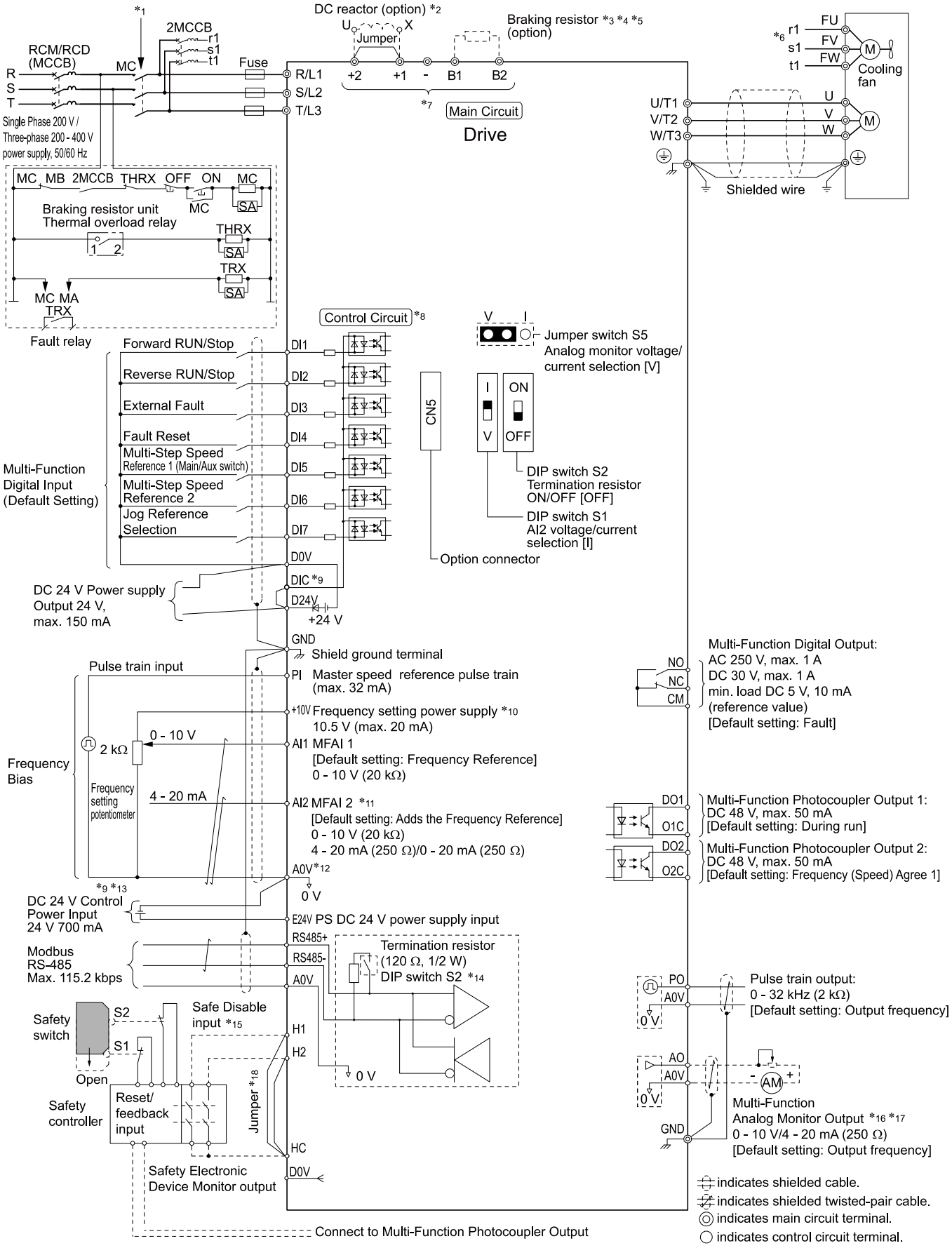

Figure 3.1 Standard Drive Connection Diagram

*1 Set the wiring sequence to de-energize the drive with the MFDO. If the drive outputs a fault during fault restart when you use the fault restart function, set *L5-02 = 2 [Fault@Reset Select = Enable Fault Output]* to de-energize the drive. Be careful when you use a cut-off sequence. The default setting for *L5-02* is *1 [Disable Fault Output]*.

*2 When you install a DC reactor, you must remove the jumper between terminals +1 and +2.

*3 When you use a regenerative converter or regenerative unit, set *L8-55 = 0 [DB IGBT Protection = Disable]*. If *L8-55 = 1 [Enabled]*, the drive will detect *rF [Braking Resistor Fault]*.

*4 When you use a regenerative converter, regenerative unit, braking resistor, or braking resistor unit, set *L3-04 = 0 [StallP@Decel Enable = Disabled]*. If *L3-04 = 1 [Enabled]*, the drive could possibly not stop in the specified deceleration time.

*5 When you use an ERF-type braking resistor, set *L8-01 = 1 [3%ERF DBR Protection = Enabled]* and set a wiring sequence to de-energize the drive with the MFDO.

*6 Cooling fan wiring is not necessary for self-cooling motors.

*7 Connect peripheral options to terminals -, +1, +2, B1, and B2.

WARNING! *Fire Hazard. Only connect factory-recommended devices or circuits to drive terminals B1, B2, -, +1, +2, and +3 terminals. Do not connect AC power to these terminals. Incorrect wiring can cause damage to the drive and serious injury or death from fire.*

*8 Connect a 24 V power supply to terminals D24V-A0V to operate the control circuit while the main circuit power supply is OFF.

*9 To set the MFDI power supply (Sinking/Sourcing Mode or internal/external power supply), install wire jumpers between terminals DIC-D24V and DIC-D0V.

NOTICE: *Do not close the circuit between terminals D24V and D0V. A closed circuit between these terminals will cause damage to the drive.*

- Sinking Mode: Install a jumper between terminals DIC and D24V.

  NOTICE: *Do not close the circuit between terminals DIC and D0V. A closed circuit between these terminals will cause damage to the drive.*

- Sourcing Mode: Install a jumper between terminals DIC and D0V.

  NOTICE: *Do not close the circuit between terminals DIC and D24V. A closed circuit between these terminals will cause damage to the drive.*

- External Power Supply: No jumper is necessary between terminals DIC-D0V and terminals DIC-D24V.

*10 The maximum output current capacity for terminal RS485+ on the control circuit is 20 mA.

NOTICE: *Damage to Equipment. Do not install a jumper between terminals +10V and AC. A closed circuit between these terminals will cause damage to the drive.*

*11 DIP switch S1 sets terminal AI2 for voltage or current input. The default setting for S1 is current input (“I” side).

*12 Do not ground the control circuit terminals A0V or connect them to the drive.

NOTICE: *Do not ground the AC control circuit terminals and only connect the A0V terminals according to the product instructions. If you connect the A0V terminals incorrectly, it can cause damage to the drive.*

*13 Connect the positive lead from an external 24 Vdc power supply to terminal D24V and the negative lead to terminal A0V.

NOTICE: *Connect terminals D24V and A0V correctly for the 24 V power supply. If you connect the wires to the incorrect terminals, it will cause damage to the drive.*

*14 Set DIP switch S2 to “ON” to enable the termination resistor in the last drive in a Modbus network.

*15 Use only Sourcing Mode for Safe Disable input.

*16 Use multi-function analog monitor outputs with analog frequency meters, ammeters, voltmeters, and wattmeters. Do not use monitor outputs with feedback-type signal devices.

*17 Jumper S5 sets terminal AO for voltage or current output. The default setting for S5 is voltage output (“V” side).

*18 Disconnect the wire jumpers between H1 and HC and H2 and HC to use the Safe Disable input.

3.3 Main Circuit Wiring

This section gives information about the functions, specifications, and procedures necessary to safely and correctly wire the main circuit in the drive.

NOTICE: *The drive can fail if users frequently turn the drive ON and OFF with the MC on the power source side to Run and Stop the drive. Incorrect operation can decrease the service life of the relay contacts and electrolytic capacitors. If you frequently use the magnetic contactor on the power source side to Run and Stop the drive, it can cause drive failure.*

Note:

Soldered wire connections can become loose over time and cause unsatisfactory drive performance.

◆ Motor and Main Circuit Connections

WARNING! *Electrical Shock Hazard. Do not connect terminals R/L1, S/L2, T/L3, L/L1, N/L2, U/T1, V/T2, W/T3, -, +1, +2, B1, or B2 to the ground terminal. If you connect these terminals to earth ground, it can cause damage to the drive or serious injury or death.*

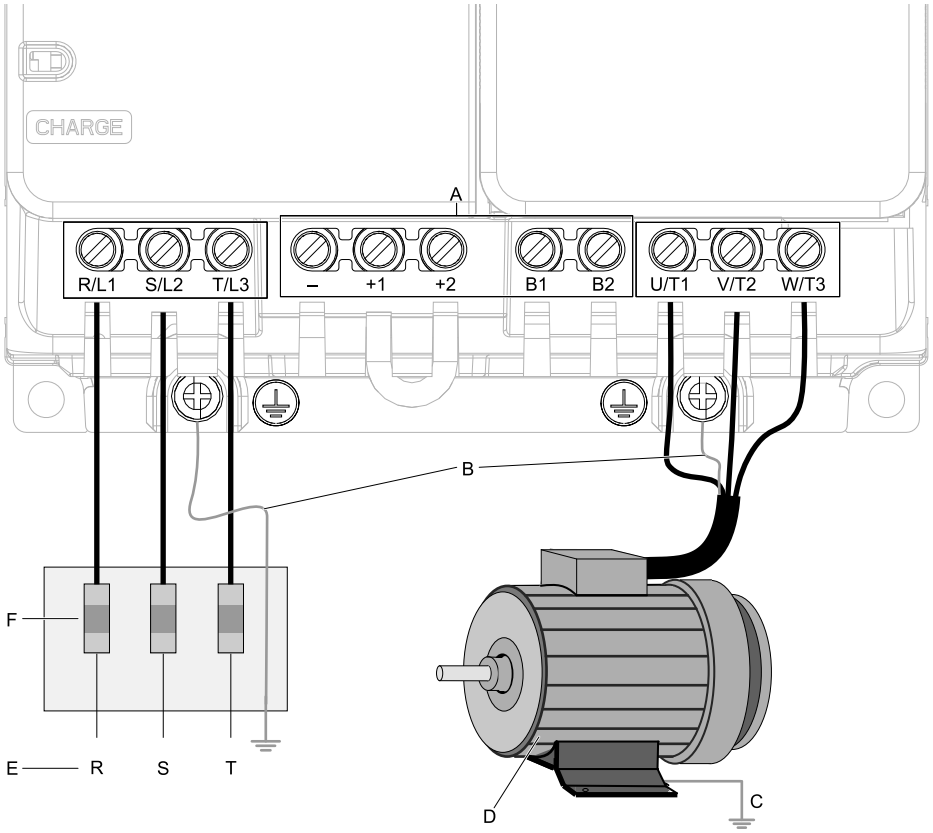

Note:

The locations of terminals are different for different drive models.

A - DC bus terminal
B - Connect to the drive ground terminal.
C - Ground the motor case.
D - Three-Phase Motor
E - Use terminals R/L1, S/L2, and T/L3 for three-phase power supply input. Use terminals L/L1 and N/L2 for single-phase power supply input.
F - Input Protection (Fuses or Circuit Breakers)

Figure 3.2 Wiring the Main Circuit and Motor

◆ Configuration of Main Circuit Terminal Block

■ Models B001 - B004

Without a Built-in EMC Filter	With a Built-in EMC Filter
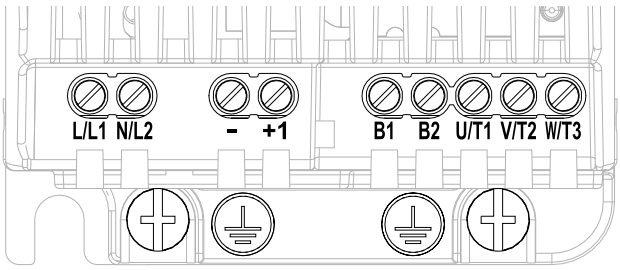	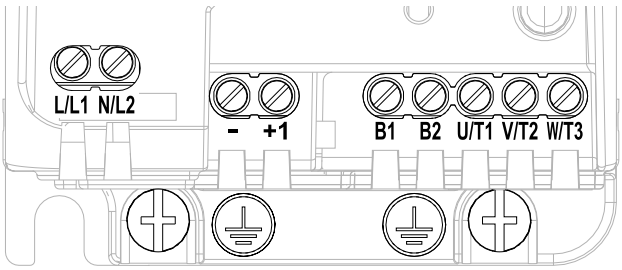

■ Models B006 - B010

Without a Built-in EMC Filter	With a Built-in EMC Filter
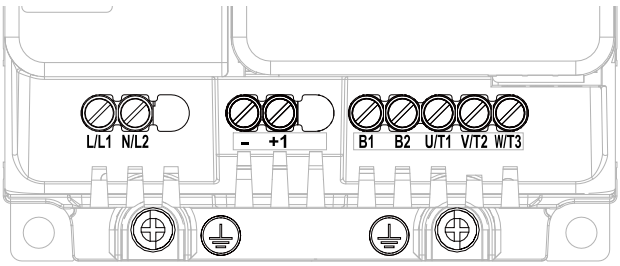	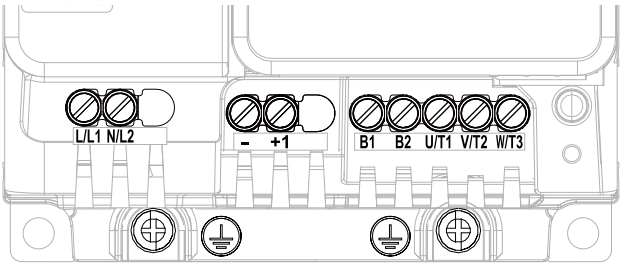

■ Model B012

Without a Built-in EMC Filter	With a Built-in EMC Filter
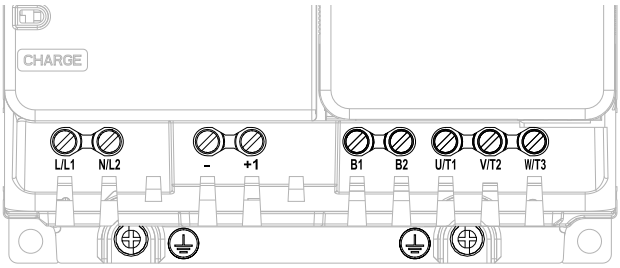	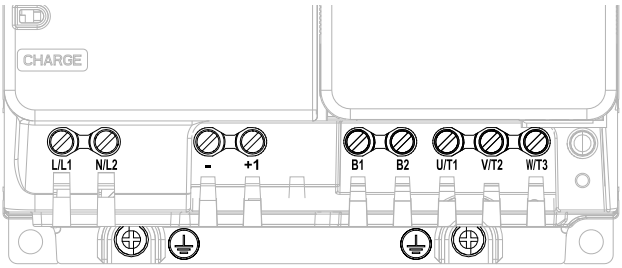

■ Model B018

Without a Built-in EMC Filter	With a Built-in EMC Filter
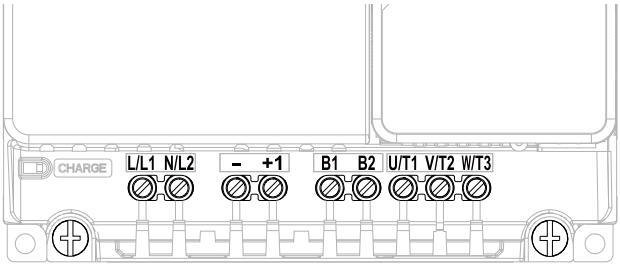	-

■ Models 2001 - 2006

Without a Built-in EMC Filter	With a Built-in EMC Filter
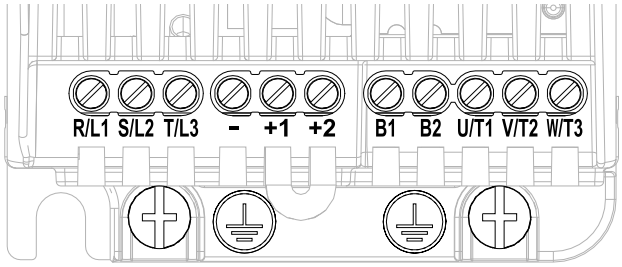	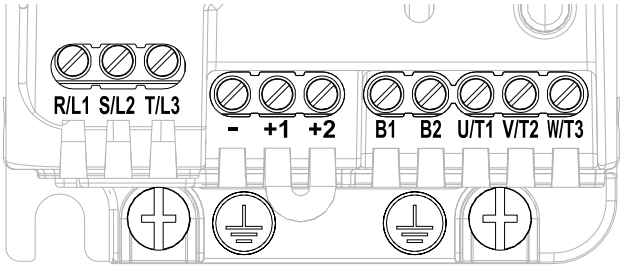

■ Models 2008 - 2012, 4001 - 4009

Without a Built-in EMC Filter	With a Built-in EMC Filter
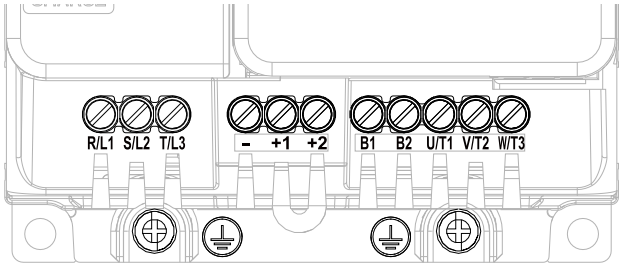	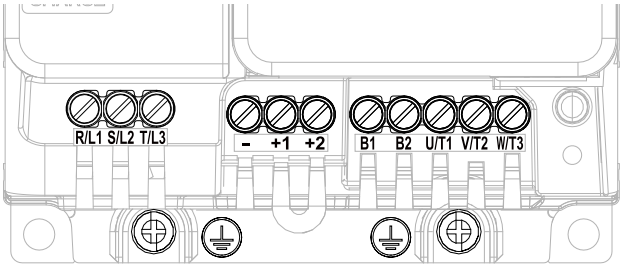

■ Model 2018 - 2021, 4012

Without a Built-in EMC Filter	With a Built-in EMC Filter
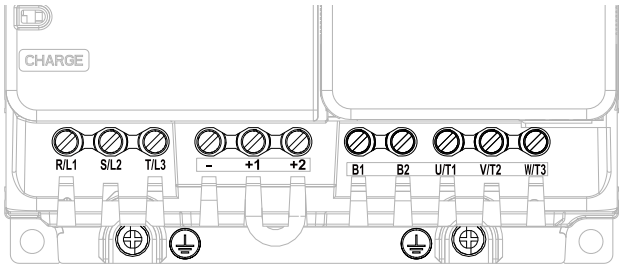	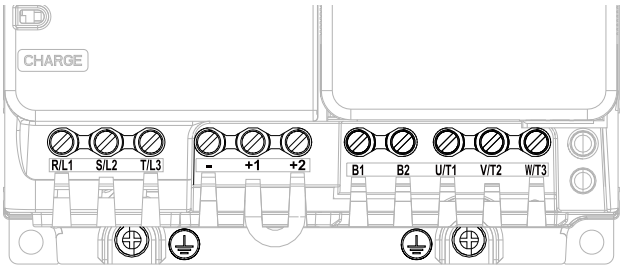

■ Models 2030 - 2042, 4018 - 4023

Without a Built-in EMC Filter	With a Built-in EMC Filter
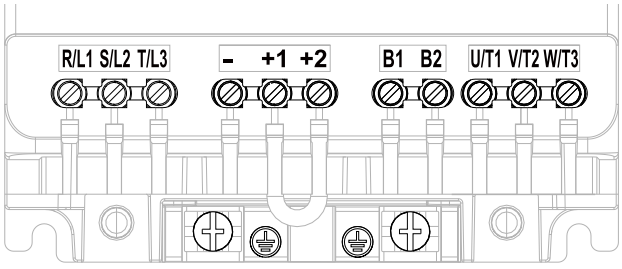	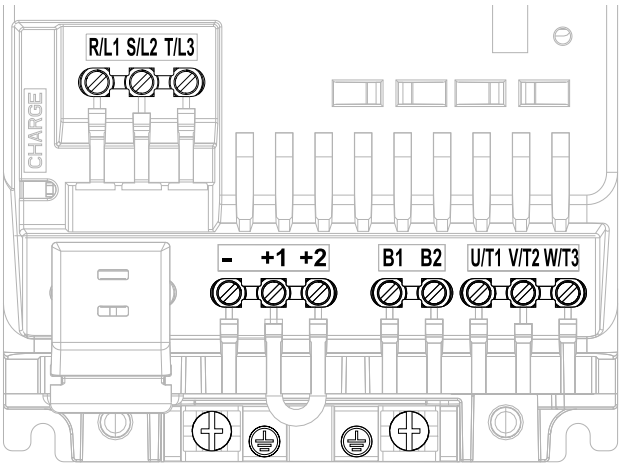

■ Models 2056, 4031 - 4038

Without a Built-in EMC Filter	With a Built-in EMC Filter
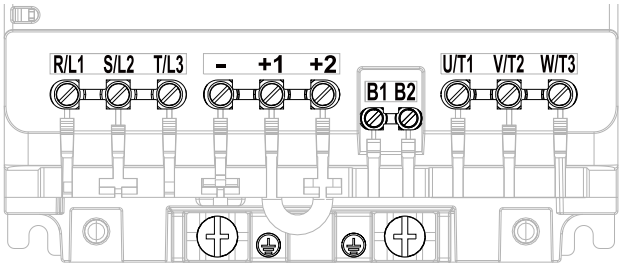	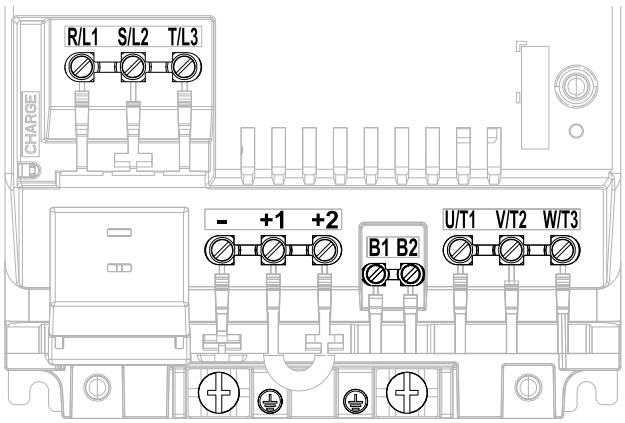

■ Models 2070, 2082

Without a Built-in EMC Filter	With a Built-in EMC Filter
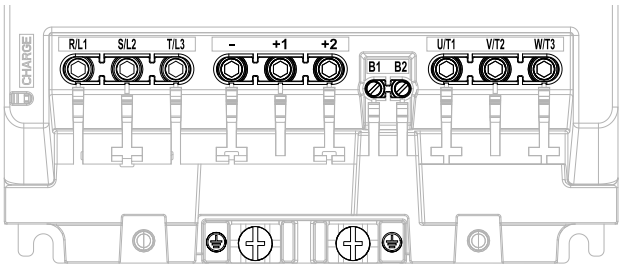	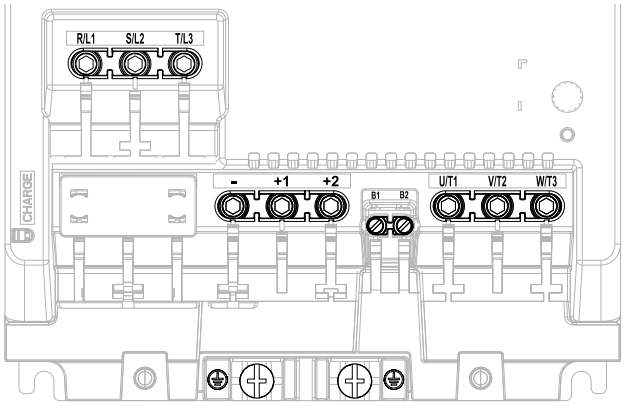

■ Models 4044, 4060

Without a Built-in EMC Filter	With a Built-in EMC Filter
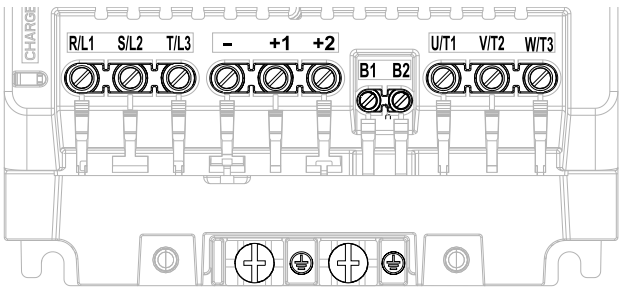	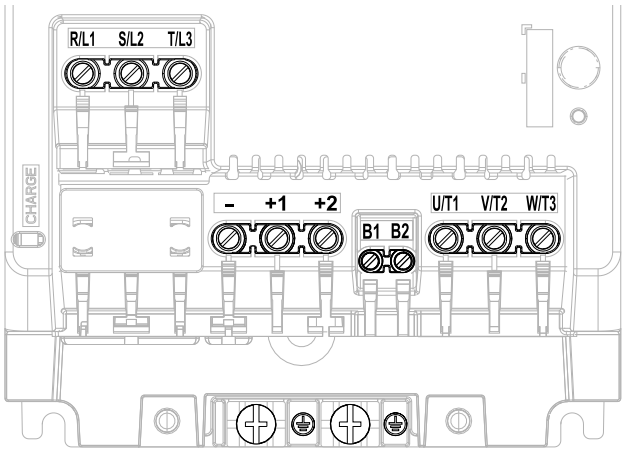

◆ Main Circuit Terminal Functions

Table 3.1 Main Circuit Terminal Names and Functions

Terminal	Models 2001 - 2082 Models 4001 - 4060		Models B001 - B018	Function
R/L1	Main circuit power supply input		-	To connect a commercial power supply.
S/L2				
T/L3				
L/L1	-		Main circuit power supply input	
N/L2				
U/T1	Drive output		Drive output	To connect a motor.
V/T2				
W/T3				
-	DC power input	-	DC power input	+1 and +2: To connect a DC reactor. **Note:** Remove the jumper between terminals +1 and +2 to connect a DC reactor.
+1		DC reactor connection		
+2	-		-	
B1	Braking resistor connection			To connect a braking resistor or braking resistor unit.
B2				
⏚	Ground Wiring			To ground the drive. • 200 V: D class grounding (ground to 100 Ω or less) • 400 V: C class grounding (ground to 10 Ω or less)

◆ Wire Selection

Select the correct wires for main circuit wiring.

Refer to *Main Circuit Wire Gauges and Tightening Torques (CE-compliance) on page 148* for wire gauges and tightening torques as specified by European standards.

Refer to *Main Circuit Wire Gauges and Tightening Torques (UL Compliance) on page 166* for wire gauges and tightening torques as specified by UL standards.

These tables use icons in Table 3.2 to show the shapes of the screw heads.

Table 3.2 Icons to Identify Screw Shapes

Icon	Screw Shape
⊕	+/-
⊖	Slotted (-)
⑤	Hex socket cap (WAF: 5 mm)

■ Wire Selection Precautions

WARNING! *Electrical Shock Hazard. Make sure that the protective ground wire conforms to technical standards and local safety regulations. The IEC/EN 61800-5-1:2007 standard specifies that you must wire the power supply to automatically de-energize when the protective ground wire disconnects. If you turn on the internal EMC filter, the leakage current of the drive will be more than 3.5 mA. You can also connect a protective ground wire that has a minimum cross-sectional area of 10 mm^2 (copper wire). If you do not obey the standards and regulations, it can cause serious injury or death.*

Think about line voltage drop before selecting wire gauges. Select wire gauges that drop the voltage by 2% or less of the rated voltage. Increase the wire gauge and the cable length when the risk of voltage drops increases. Calculate line voltage drop with this formula:

Line voltage drop (V) = $\sqrt{3}$ × wire resistance (Ω/km) × wiring distance (m) × motor rated current (A) × 10^{-3}.

■ Precautions during Wiring

- Refer to “AC Drive Option Braking Unit, Braking Resistor Unit Instruction Manual (TOBPC72060001)” for information about wire gauges and tightening torques to connect braking resistor units.
- Use terminals +1 and - to connect a regenerative converter or regenerative unit.

WARNING! *Fire Hazard. Do not connect a braking resistor to terminals +1 or -. Use terminals B1 and B2 for the braking resistor connections. If you connect a braking resistor to the incorrect terminals, it can cause damage to the drive and braking circuit and serious injury or death.*

■ Main Circuit Wire Gauges and Tightening Torques for CE Compliance

WARNING! *Electrical Shock Hazard. Make sure that the protective ground wire conforms to technical standards and local safety regulations. The IEC/EN 61800-5-1:2007 standard specifies that you must wire the power supply to automatically de-energize when the protective ground wire disconnects. If you turn on the internal EMC filter, the leakage current of the drive will be more than 3.5 mA. You can also connect a protective ground wire that has a minimum cross-sectional area of 10 mm² (copper wire). If you do not obey the standards and regulations, it can cause serious injury or death.*

Note:

- The recommended wire gauges are based on drive continuous current ratings with 75 °C (167 °F) 600 V class 2 heat-resistant indoor PVC wire. Assume these conditions:
  - Ambient temperature: 40 °C (104 °F) maximum
  - Wiring distance: 100 m (3281 ft) maximum
  - Normal duty rated current value
- Use terminals +1, +2, -, B1, and B2 to connect peripheral options, for example a DC reactor or a braking resistor. Do not connect other items to these terminals.
- Refer to the instruction manual for each device for recommended wire gauges to connect peripheral devices or options to terminals +1, +2, -, B1, and B2. Contact the manufacturer or your nearest sales representative if the recommended wire gauges for the peripheral devices or options are out of the range of the applicable gauges for the drive.

Three-Phase 200 V Class (CE-compliance)

Model	Terminal	Recommended Gauge mm²	Applicable Gauge mm²	Wire Stripping Length *1 mm	Terminal Screw	Tightening Torque N·m (in·lb)
2001	R/L1, S/L2, T/L3	2.5	2.5	6.5	M3 ⊖	0.5 - 0.6 (4.4 - 5.3)
	U/T1, V/T2, W/T3	2.5	2.5	6.5	M3 ⊖	0.5 - 0.6 (4.4 - 5.3)
	-, +1, +2	2.5	2.5	6.5	M3 ⊖	0.5 - 0.6 (4.4 - 5.3)
	B1, B2	2.5	2.5	6.5	M3 ⊖	0.5 - 0.6 (4.4 - 5.3)
	⏚	2.5 *2	2.5 *2	-	M3.5 ⊕	0.8 - 1.0 (7.1 - 8.9)
2002	R/L1, S/L2, T/L3	2.5	2.5	6.5	M3 ⊖	0.5 - 0.6 (4.4 - 5.3)
	U/T1, V/T2, W/T3	2.5	2.5	6.5	M3 ⊖	0.5 - 0.6 (4.4 - 5.3)
	-, +1, +2	2.5	2.5	6.5	M3 ⊖	0.5 - 0.6 (4.4 - 5.3)
	B1, B2	2.5	2.5	6.5	M3 ⊖	0.5 - 0.6 (4.4 - 5.3)
	⏚	2.5 *2	2.5 *2	-	M3.5 ⊕	0.8 - 1.0 (7.1 - 8.9)
2004	R/L1, S/L2, T/L3	2.5	2.5	6.5	M3 ⊖	0.5 - 0.6 (4.4 - 5.3)
	U/T1, V/T2, W/T3	2.5	2.5	6.5	M3 ⊖	0.5 - 0.6 (4.4 - 5.3)
	-, +1, +2	2.5	2.5	6.5	M3 ⊖	0.5 - 0.6 (4.4 - 5.3)
	B1, B2	2.5	2.5	6.5	M3 ⊖	0.5 - 0.6 (4.4 - 5.3)
	⏚	2.5 *2	2.5 *2	-	M3.5 ⊕	0.8 - 1.0 (7.1 - 8.9)

Model	Terminal	Recommended Gauge mm²	Applicable Gauge mm²	Wire Stripping Length *1 mm	Terminal Screw	Tightening Torque N·m (in·lb)
2006	R/L1, S/L2, T/L3	2.5	2.5	6.5	M3 ⊖	0.5 - 0.6 (4.4 - 5.3)
	U/T1, V/T2, W/T3	2.5	2.5	6.5	M3 ⊖	0.5 - 0.6 (4.4 - 5.3)
	-, +1, +2	2.5	2.5	6.5	M3 ⊖	0.5 - 0.6 (4.4 - 5.3)
	B1, B2	2.5	2.5	6.5	M3 ⊖	0.5 - 0.6 (4.4 - 5.3)
	⏚	2.5 *2	2.5 *2	-	M3.5 ⊕	0.8 - 1.0 (7.1 - 8.9)
2008	R/L1, S/L2, T/L3	2.5	2.5 - 4	8	M3 ⊖	0.5 - 0.6 (4.4 - 5.3)
	U/T1, V/T2, W/T3	2.5	2.5 - 4	8	M3 ⊖	0.5 - 0.6 (4.4 - 5.3)
	-, +1, +2	2.5	2.5 - 4	8	M3 ⊖	0.5 - 0.6 (4.4 - 5.3)
	B1, B2	2.5	2.5 - 4	8	M3 ⊖	0.5 - 0.6 (4.4 - 5.3)
	⏚	4 *2	2.5 - 6 *2	-	M4 ⊕	1.2 - 1.5 (10.6 - 13.3)
2010	R/L1, S/L2, T/L3	2.5	2.5 - 4	8	M3 ⊖	0.5 - 0.6 (4.4 - 5.3)
	U/T1, V/T2, W/T3	2.5	2.5 - 4	8	M3 ⊖	0.5 - 0.6 (4.4 - 5.3)
	-, +1, +2	2.5	2.5 - 4	8	M3 ⊖	0.5 - 0.6 (4.4 - 5.3)
	B1, B2	2.5	2.5 - 4	8	M3 ⊖	0.5 - 0.6 (4.4 - 5.3)
	⏚	4 *2	2.5 - 6 *2	-	M4 ⊕	1.2 - 1.5 (10.6 - 13.3)
2012	R/L1, S/L2, T/L3	2.5	2.5 - 4	8	M3 ⊖	0.5 - 0.6 (4.4 - 5.3)
	U/T1, V/T2, W/T3	2.5	2.5 - 4	8	M3 ⊖	0.5 - 0.6 (4.4 - 5.3)
	-, +1, +2	2.5	2.5 - 4	8	M3 ⊖	0.5 - 0.6 (4.4 - 5.3)
	B1, B2	2.5	2.5 - 4	8	M3 ⊖	0.5 - 0.6 (4.4 - 5.3)
	⏚	4 *2	2.5 - 6 *2	-	M4 ⊕	1.2 - 1.5 (10.6 - 13.3)
2018	R/L1, S/L2, T/L3	2.5	2.5 - 4	10	M4 ⊖	1.5 - 1.7 (13.5 - 15)
	U/T1, V/T2, W/T3	2.5	2.5 - 4	10	M4 ⊖	1.5 - 1.7 (13.5 - 15)
	-, +1, +2	4	2.5 - 6	10	M4 ⊖	1.5 - 1.7 (13.5 - 15)
	B1, B2	2.5	2.5 - 4	10	M4 ⊖	1.5 - 1.7 (13.5 - 15)
	⏚	6 *2	2.5 - 6 *2	-	M4 ⊕	1.2 - 1.5 (10.6 - 13.3)

Model	Terminal	Recommended Gauge mm²	Applicable Gauge mm²	Wire Stripping Length *1 mm	Terminal Screw	Tightening Torque N·m (in·lb)
2021	R/L1, S/L2, T/L3	4	2.5 - 6	10	M4 ⊖	1.5 - 1.7 (13.5 - 15)
	U/T1, V/T2, W/T3	2.5	2.5 - 4	10	M4 ⊖	1.5 - 1.7 (13.5 - 15)
	-, +1, +2	6	4 - 10	10	M4 ⊖	1.5 - 1.7 (13.5 - 15)
	B1, B2	2.5	2.5 - 4	10	M4 ⊖	1.5 - 1.7 (13.5 - 15)
	⏚	6 *2	2.5 - 6 *2	-	M4 ⊕	1.2 - 1.5 (10.6 - 13.3)
2030	R/L1, S/L2, T/L3	6	4 - 10	10	M4 ⊖	1.5 - 1.7 (13.5 - 15)
	U/T1, V/T2, W/T3	6	4 - 10	10	M4 ⊖	1.5 - 1.7 (13.5 - 15)
	-, +1, +2	10	2.5 - 16	10	M4 ⊖	1.5 - 1.7 (13.5 - 15)
	B1, B2	2.5	2.5 - 4	10	M4 ⊖	1.5 - 1.7 (13.5 - 15)
	⏚	6 *2	6 - 16	-	M5 ⊕	2.0 - 2.5 (17.7 - 22.1)
2042	R/L1, S/L2, T/L3	10	2.5 - 16	10	M4 ⊖	1.5 - 1.7 (13.5 - 15)
	U/T1, V/T2, W/T3	10	2.5 - 16	10	M4 ⊖	1.5 - 1.7 (13.5 - 15)
	-, +1, +2	16	4 - 25	18	M5 ⊖	2.3 - 2.5 (19.8 - 22)
	B1, B2	4	2.5 - 6	10	M4 ⊖	1.5 - 1.7 (13.5 - 15)
	⏚	10	6 - 16	-	M5 ⊕	2.0 - 2.5 (17.7 - 22.1)
2056	R/L1, S/L2, T/L3	16	4 - 25	18	M5 ⊖	2.3 - 2.5 (19.8 - 22)
	U/T1, V/T2, W/T3	16	4 - 25	18	M5 ⊖	2.3 - 2.5 (19.8 - 22)
	-, +1, +2	25	6 - 35	18	M5 ⊖	• ≤ 25 mm² 2.3 - 2.5 (19.8 - 22) • 35 mm² ≤ 4.1 - 4.5 (36 - 40)
	B1, B2	10	4 - 16	10	M4 ⊖	1.5 - 1.7 (13.5 - 15)
	⏚	10	10 - 25	-	M6 ⊕	5.4 - 6.0 (47.8 - 53.1)
2070	R/L1, S/L2, T/L3	25	6 - 35	20	M6 ⑤	5 - 5.5 (45 - 49)
	U/T1, V/T2, W/T3	16	6 - 25	20	M6 ⑤	5 - 5.5 (45 - 49)
	-, +1, +2	35	10 - 50	20	M6 ⑤	5 - 5.5 (45 - 49)
	B1, B2	10	4 - 16	10	M4 ⊖	1.5 - 1.7 (13.5 - 15)
	⏚	16	10 - 25	-	M6 ⊕	5.4 - 6.0 (47.8 - 53.1)

Model	Terminal	Recommended Gauge mm²	Applicable Gauge mm²	Wire Stripping Length *1 mm	Terminal Screw	Tightening Torque N·m (in·lb)
2082	R/L1, S/L2, T/L3	35	10 - 50	20	M6 ⑤	5 - 5.5 (45 - 49)
	U/T1, V/T2, W/T3	25	10 - 35	20	M6 ⑤	5 - 5.5 (45 - 49)
	-, +1, +2	50	16 - 70	20	M6 ⑤	5 - 5.5 (45 - 49)
	B1, B2	16	4 - 16	10	M4 ⊖	1.5 - 1.7 (13.5 - 15)
	⏚	16	10 - 25	-	M6 ⊕	5.4 - 6.0 (47.8 - 53.1)

*1 Remove insulation from the ends of wires to expose the length of wire shown.

*2 If you turn on the internal EMC filter, the leakage current of the drive will be more than 3.5 mA. Use these closed-loop crimp terminals or equivalent to connect a protective ground wire that has a minimum cross-sectional area of 10 mm² (copper wire).

- 8-4NS from JST Mfg. Co., Ltd.
- R8-4S from NICHIFU Co.,Ltd.

Single-Phase 200 V Class (CE-compliance)

Model	Terminal	Recommended Gauge mm²	Applicable Gauge mm²	Wire Stripping Length *1 mm	Terminal Screw	Tightening Torque N·m (in·lb)
B001	L/L1, N/L2	2.5	2.5	6.5	M3 ⊖	0.5 - 0.6 (4.4 - 5.3)
	U/T1, V/T2, W/T3	2.5	2.5	6.5	M3 ⊖	0.5 - 0.6 (4.4 - 5.3)
	-, +1	2.5	2.5	6.5	M3 ⊖	0.5 - 0.6 (4.4 - 5.3)
	B1, B2	2.5	2.5	6.5	M3 ⊖	0.5 - 0.6 (4.4 - 5.3)
	⏚	2.5 *2	2.5 *2	-	M3.5 ⊕	0.8 - 1.0 (7.1 - 8.9)
B002	L/L1, N/L2	2.5	2.5	6.5	M3 ⊖	0.5 - 0.6 (4.4 - 5.3)
	U/T1, V/T2, W/T3	2.5	2.5	6.5	M3 ⊖	0.5 - 0.6 (4.4 - 5.3)
	-, +1	2.5	2.5	6.5	M3 ⊖	0.5 - 0.6 (4.4 - 5.3)
	B1, B2	2.5	2.5	6.5	M3 ⊖	0.5 - 0.6 (4.4 - 5.3)
	⏚	2.5 *2	2.5 *2	-	M3.5 ⊕	0.8 - 1.0 (7.1 - 8.9)
B004	L/L1, N/L2	2.5	2.5	6.5	M3 ⊖	0.5 - 0.6 (4.4 - 5.3)
	U/T1, V/T2, W/T3	2.5	2.5	6.5	M3 ⊖	0.5 - 0.6 (4.4 - 5.3)
	-, +1	2.5	2.5	6.5	M3 ⊖	0.5 - 0.6 (4.4 - 5.3)
	B1, B2	2.5	2.5	6.5	M3 ⊖	0.5 - 0.6 (4.4 - 5.3)
	⏚	2.5 *2	2.5 *2	-	M3.5 ⊕	0.8 - 1.0 (7.1 - 8.9)

Model	Terminal	Recommended Gauge mm²	Applicable Gauge mm²	Wire Stripping Length *1 mm	Terminal Screw	Tightening Torque N·m (in·lb)
B006	L/L1, N/L2	2.5	2.5 - 4	8	M3 ⊖	0.5 - 0.6 (4.4 - 5.3)
	U/T1, V/T2, W/T3	2.5	2.5 - 4	8	M3 ⊖	0.5 - 0.6 (4.4 - 5.3)
	-, +1	2.5	2.5 - 4	8	M3 ⊖	0.5 - 0.6 (4.4 - 5.3)
	B1, B2	2.5	2.5 - 4	8	M3 ⊖	0.5 - 0.6 (4.4 - 5.3)
	⏚	2.5 *2	2.5 - 6 *2	-	M4 ⊕	1.2 - 1.5 (10.6 - 13.3)
B010	L/L1, N/L2	2.5	2.5 - 4	8	M3 ⊖	0.5 - 0.6 (4.4 - 5.3)
	U/T1, V/T2, W/T3	2.5	2.5 - 4	8	M3 ⊖	0.5 - 0.6 (4.4 - 5.3)
	-, +1	2.5	2.5 - 4	8	M3 ⊖	0.5 - 0.6 (4.4 - 5.3)
	B1, B2	2.5	2.5 - 4	8	M3 ⊖	0.5 - 0.6 (4.4 - 5.3)
	⏚	2.5 *2	2.5 - 6 *2	-	M4 ⊕	1.2 - 1.5 (10.6 - 13.3)
B012	L/L1, N/L2	4	2.5 - 6	10	M4 ⊖	1.5 - 1.7 (13.5 - 15)
	U/T1, V/T2, W/T3	2.5	2.5 - 4	10	M4 ⊖	1.5 - 1.7 (13.5 - 15)
	-, +1	4	2.5 - 6	10	M4 ⊖	1.5 - 1.7 (13.5 - 15)
	B1, B2	2.5	2.5 - 4	10	M4 ⊖	1.5 - 1.7 (13.5 - 15)
	⏚	4 *2	2.5 - 6 *2	-	M4 ⊕	1.2 - 1.5 (10.6 - 13.3)
B018	L/L1, N/L2	6	2.5 - 10	10	M4 ⊖	1.5 - 1.7 (13.5 - 15)
	U/T1, V/T2, W/T3	2.5	2.5 - 4	10	M4 ⊖	1.5 - 1.7 (13.5 - 15)
	-, +1	6	2.5 - 10	10	M4 ⊖	1.5 - 1.7 (13.5 - 15)
	B1, B2	2.5	2.5 - 4	10	M4 ⊖	1.5 - 1.7 (13.5 - 15)
	⏚	6 *2	4 - 10 *2	-	M5 ⊕	2.0 - 2.5 (17.7 - 22.1)

*1 Remove insulation from the ends of wires to expose the length of wire shown.

*2 If you turn on the internal EMC filter, the leakage current of the drive will be more than 3.5 mA. Use these closed-loop crimp terminals or equivalent to connect a protective ground wire that has a minimum cross-sectional area of 10 mm² (copper wire).

- 8-4NS from JST Mfg. Co., Ltd.
- R8-4S from NICHIFU Co.,Ltd.

Three-Phase 400 V Class (CE-compliance)

Model	Terminal	Recommended Gauge mm²	Applicable Gauge mm²	Wire Stripping Length *1 mm	Terminal Screw	Tightening Torque N·m (in·lb)
4001	R/L1, S/L2, T/L3	2.5	2.5 - 4	8	M3 ⊖	0.5 - 0.6 (4.4 - 5.3)
	U/T1, V/T2, W/T3	2.5	2.5 - 4	8	M3 ⊖	0.5 - 0.6 (4.4 - 5.3)
	-, +1, +2	2.5	2.5 - 4	8	M3 ⊖	0.5 - 0.6 (4.4 - 5.3)
	B1, B2	2.5	2.5 - 4	8	M3 ⊖	0.5 - 0.6 (4.4 - 5.3)
	⏚	2.5 *2	2.5 - 6 *2	-	M4 ⊕	1.2 - 1.5 (10.6 - 13.3)
4002	R/L1, S/L2, T/L3	2.5	2.5 - 4	8	M3 ⊖	0.5 - 0.6 (4.4 - 5.3)
	U/T1, V/T2, W/T3	2.5	2.5 - 4	8	M3 ⊖	0.5 - 0.6 (4.4 - 5.3)
	-, +1, +2	2.5	2.5 - 4	8	M3 ⊖	0.5 - 0.6 (4.4 - 5.3)
	B1, B2	2.5	2.5 - 4	8	M3 ⊖	0.5 - 0.6 (4.4 - 5.3)
	⏚	2.5 *2	2.5 - 6 *2	-	M4 ⊕	1.2 - 1.5 (10.6 - 13.3)
4004	R/L1, S/L2, T/L3	2.5	2.5 - 4	8	M3 ⊖	0.5 - 0.6 (4.4 - 5.3)
	U/T1, V/T2, W/T3	2.5	2.5 - 4	8	M3 ⊖	0.5 - 0.6 (4.4 - 5.3)
	-, +1, +2	2.5	2.5 - 4	8	M3 ⊖	0.5 - 0.6 (4.4 - 5.3)
	B1, B2	2.5	2.5 - 4	8	M3 ⊖	0.5 - 0.6 (4.4 - 5.3)
	⏚	4 *2	2.5 - 6 *2	-	M4 ⊕	1.2 - 1.5 (10.6 - 13.3)
4005	R/L1, S/L2, T/L3	2.5	2.5 - 4	8	M3 ⊖	0.5 - 0.6 (4.4 - 5.3)
	U/T1, V/T2, W/T3	2.5	2.5 - 4	8	M3 ⊖	0.5 - 0.6 (4.4 - 5.3)
	-, +1, +2	2.5	2.5 - 4	8	M3 ⊖	0.5 - 0.6 (4.4 - 5.3)
	B1, B2	2.5	2.5 - 4	8	M3 ⊖	0.5 - 0.6 (4.4 - 5.3)
	⏚	4 *2	2.5 - 6 *2	-	M4 ⊕	1.2 - 1.5 (10.6 - 13.3)
4007	R/L1, S/L2, T/L3	2.5	2.5 - 4	8	M3 ⊖	0.5 - 0.6 (4.4 - 5.3)
	U/T1, V/T2, W/T3	2.5	2.5 - 4	8	M3 ⊖	0.5 - 0.6 (4.4 - 5.3)
	-, +1, +2	2.5	2.5 - 4	8	M3 ⊖	0.5 - 0.6 (4.4 - 5.3)
	B1, B2	2.5	2.5 - 4	8	M3 ⊖	0.5 - 0.6 (4.4 - 5.3)
	⏚	4 *2	2.5 - 6 *2	-	M4 ⊕	1.2 - 1.5 (10.6 - 13.3)

Model	Terminal	Recommended Gauge mm²	Applicable Gauge mm²	Wire Stripping Length *1 mm	Terminal Screw	Tightening Torque N·m (in·lb)
4009	R/L1, S/L2, T/L3	2.5	2.5 - 4	8	M3 ⊖	0.5 - 0.6 (4.4 - 5.3)
	U/T1, V/T2, W/T3	2.5	2.5 - 4	8	M3 ⊖	0.5 - 0.6 (4.4 - 5.3)
	-, +1, +2	2.5	2.5 - 4	8	M3 ⊖	0.5 - 0.6 (4.4 - 5.3)
	B1, B2	2.5	2.5 - 4	8	M3 ⊖	0.5 - 0.6 (4.4 - 5.3)
	⏚	4 *2	2.5 - 6 *2	-	M4 ⊕	1.2 - 1.5 (10.6 - 13.3)
4012	R/L1, S/L2, T/L3	2.5	2.5 - 4	10	M4 ⊖	1.5 - 1.7 (13.5 - 15)
	U/T1, V/T2, W/T3	2.5	2.5 - 4	10	M4 ⊖	1.5 - 1.7 (13.5 - 15)
	-, +1, +2	2.5	2.5 - 4	10	M4 ⊖	1.5 - 1.7 (13.5 - 15)
	B1, B2	2.5	2.5 - 4	10	M4 ⊖	1.5 - 1.7 (13.5 - 15)
	⏚	4 *2	2.5 - 6 *2	-	M4 ⊕	1.2 - 1.5 (10.6 - 13.3)
4018	R/L1, S/L2, T/L3	2.5	2.5 - 4	10	M4 ⊖	1.5 - 1.7 (13.5 - 15)
	U/T1, V/T2, W/T3	2.5	2.5 - 4	10	M4 ⊖	1.5 - 1.7 (13.5 - 15)
	-, +1, +2	4	2.5 - 6	10	M4 ⊖	1.5 - 1.7 (13.5 - 15)
	B1, B2	2.5	2.5 - 4	10	M4 ⊖	1.5 - 1.7 (13.5 - 15)
	⏚	4 *2	2.5 - 16	-	M5 ⊕	2.0 - 2.5 (17.7 - 22.1)
4023	R/L1, S/L2, T/L3	4	2.5 - 6	10	M4 ⊖	1.5 - 1.7 (13.5 - 15)
	U/T1, V/T2, W/T3	4	2.5 - 6	10	M4 ⊖	1.5 - 1.7 (13.5 - 15)
	-, +1, +2	4	4 - 6	10	M4 ⊖	1.5 - 1.7 (13.5 - 15)
	B1, B2	2.5	2.5 - 4	10	M4 ⊖	1.5 - 1.7 (13.5 - 15)
	⏚	4 *2	4 - 16	-	M5 ⊕	2.0 - 2.5 (17.7 - 22.1)
4031	R/L1, S/L2, T/L3	6	4 - 10	10	M4 ⊖	1.5 - 1.7 (13.5 - 15)
	U/T1, V/T2, W/T3	6	4 - 10	10	M4 ⊖	1.5 - 1.7 (13.5 - 15)
	-, +1, +2	10	2.5 - 16	18	M5 ⊖	2.3 - 2.5 (19.8 - 22)
	B1, B2	2.5	2.5 - 4	10	M4 ⊖	1.5 - 1.7 (13.5 - 15)
	⏚	6 *2	6 - 16 *2	-	M6 ⊕	5.4 - 6.0 (47.8 - 53.1)

Model	Terminal	Recommended Gauge mm²	Applicable Gauge mm²	Wire Stripping Length *1 mm	Terminal Screw	Tightening Torque N·m (in·lb)
4038	R/L1, S/L2, T/L3	10	4 - 16	10	M4 ⊖	1.5 - 1.7 (13.5 - 15)
	U/T1, V/T2, W/T3	6	2.5 - 10	10	M4 ⊖	1.5 - 1.7 (13.5 - 15)
	-, +1, +2	16	4 - 25	18	M5 ⊖	2.3 - 2.5 (19.8 - 22)
	B1, B2	4	2.5 - 6	10	M4 ⊖	1.5 - 1.7 (13.5 - 15)
	⏚	10	6 - 16	-	M6 ⊕	5.4 - 6.0 (47.8 - 53.1)
4044	R/L1, S/L2, T/L3	16	4 - 25	18	M5 ⊖	2.3 - 2.5 (19.8 - 22)
	U/T1, V/T2, W/T3	10	4 - 16	18	M5 ⊖	2.3 - 2.5 (19.8 - 22)
	-, +1, +2	16	6 - 25	18	M5 ⊖	2.3 - 2.5 (19.8 - 22)
	B1, B2	6	4 - 10	10	M4 ⊖	1.5 - 1.7 (13.5 - 15)
	⏚	10	6 - 16	-	M6 ⊕	5.4 - 6.0 (47.8 - 53.1)
4060	R/L1, S/L2, T/L3	25	6 - 35	18	M5 ⊖	• ≤ 25 mm² 2.3 - 2.5 (19.8 - 22) • 35 mm² ≤ 4.1 - 4.5 (36 - 40)
	U/T1, V/T2, W/T3	16	4 - 25	18	M5 ⊖	2.3 - 2.5 (19.8 - 22)
	-, +1, +2	25	6 - 35	18	M5 ⊖	• ≤ 25 mm² 2.3 - 2.5 (19.8 - 22) • 35 mm² ≤ 4.1 - 4.5 (36 - 40)
	B1, B2	10	2.5 - 16	10	M4 ⊖	1.5 - 1.7 (13.5 - 15)
	⏚	10	6 - 16	-	M6 ⊕	5.4 - 6.0 (47.8 - 53.1)

*1 Remove insulation from the ends of wires to expose the length of wire shown.

*2 If you turn on the internal EMC filter, the leakage current of the drive will be more than 3.5 mA. Use these closed-loop crimp terminals or equivalent to connect a protective ground wire that has a minimum cross-sectional area of 10 mm² (copper wire).

- 8-4NS from JST Mfg. Co., Ltd.
- R8-4S from NICHIFU Co.,Ltd.

■ Main Circuit Wire Gauges and Tightening Torques for UL Compliance

WARNING! *Electrical Shock Hazard. Make sure that the protective ground wire conforms to technical standards and local safety regulations. The IEC/EN 61800-5-1:2007 standard specifies that you must wire the power supply to automatically de-energize when the protective ground wire disconnects. If you turn on the internal EMC filter, the leakage current of the drive will be more than 3.5 mA. You can also connect a protective ground wire that has a minimum cross-sectional area of 10 mm² (copper wire). If you do not obey the standards and regulations, it can cause serious injury or death.*

Note:

- The recommended wire gauges are based on drive continuous current ratings with 75 °C (167 °F) 600 V class 2 heat-resistant indoor PVC wire. Assume these conditions:
  - Ambient temperature: 40 °C (104 °F) maximum
  - Wiring distance: 100 m (3281 ft) maximum
  - Normal duty rated current value
- Use terminals +1, +2, -, B1, and B2 to connect peripheral options, for example a DC reactor or a braking resistor. Do not connect other items to these terminals.
- Refer to the instruction manual for each device for recommended wire gauges to connect peripheral devices or options to terminals +1, +2, -, B1, and B2. Contact the manufacturer or your nearest sales representative if the recommended wire gauges for the peripheral devices or options are out of the range of the applicable gauges for the drive.

Three-Phase 200 V Class (UL-compliance)

Model	Terminal	Recommended Gauge mm²	Applicable Gauge mm²	Wire Stripping Length *1 mm	Terminal Screw		Tightening Torque N·m (in·lb)
					Size	Shape	
2001	R/L1, S/L2, T/L3	2	2	6.5	M3	⊖	0.5 - 0.6 (4.4 - 5.3)
	U/T1, V/T2, W/T3	2	2	6.5	M3	⊖	0.5 - 0.6 (4.4 - 5.3)
	-, +1, +2	2	2	6.5	M3	⊖	0.5 - 0.6 (4.4 - 5.3)
	B1, B2	2	2	6.5	M3	⊖	0.5 - 0.6 (4.4 - 5.3)
	⏚	2 *2	2 *2	-	M3.5	⊕	0.8 - 1.0 (7.1 - 8.9)
2002	R/L1, S/L2, T/L3	2	2	6.5	M3	⊖	0.5 - 0.6 (4.4 - 5.3)
	U/T1, V/T2, W/T3	2	2	6.5	M3	⊖	0.5 - 0.6 (4.4 - 5.3)
	-, +1, +2	2	2	6.5	M3	⊖	0.5 - 0.6 (4.4 - 5.3)
	B1, B2	2	2	6.5	M3	⊖	0.5 - 0.6 (4.4 - 5.3)
	⏚	2 *2	2 *2	-	M3.5	⊕	0.8 - 1.0 (7.1 - 8.9)
2004	R/L1, S/L2, T/L3	2	2	6.5	M3	⊖	0.5 - 0.6 (4.4 - 5.3)
	U/T1, V/T2, W/T3	2	2	6.5	M3	⊖	0.5 - 0.6 (4.4 - 5.3)
	-, +1, +2	2	2	6.5	M3	⊖	0.5 - 0.6 (4.4 - 5.3)
	B1, B2	2	2	6.5	M3	⊖	0.5 - 0.6 (4.4 - 5.3)
	⏚	2 *2	2 *2	-	M3.5	⊕	0.8 - 1.0 (7.1 - 8.9)
2006	R/L1, S/L2, T/L3	2	2	6.5	M3	⊖	0.5 - 0.6 (4.4 - 5.3)
	U/T1, V/T2, W/T3	2	2	6.5	M3	⊖	0.5 - 0.6 (4.4 - 5.3)
	-, +1, +2	2	2	6.5	M3	⊖	0.5 - 0.6 (4.4 - 5.3)
	B1, B2	2	2	6.5	M3	⊖	0.5 - 0.6 (4.4 - 5.3)
	⏚	2 *2	2 *2	-	M3.5	⊕	0.8 - 1.0 (7.1 - 8.9)
2008	R/L1, S/L2, T/L3	2	2 - 3.5	8	M3	⊖	0.5 - 0.6 (4.4 - 5.3)
	U/T1, V/T2, W/T3	2	2 - 3.5	8	M3	⊖	0.5 - 0.6 (4.4 - 5.3)
	-, +1, +2	2	2 - 3.5	8	M3	⊖	0.5 - 0.6 (4.4 - 5.3)
	B1, B2	2	2 - 3.5	8	M3	⊖	0.5 - 0.6 (4.4 - 5.3)
	⏚	3.5 *2	2 - 5.5 *2	-	M4	⊕	1.2 - 1.5 (10.6 - 13.3)

Model	Terminal	Recommended Gauge mm²	Applicable Gauge mm²	Wire Stripping Length *1 mm	Terminal Screw		Tightening Torque N·m (in·lb)
					Size	Shape	
2010	R/L1, S/L2, T/L3	2	2 - 3.5	8	M3	⊖	0.5 - 0.6 (4.4 - 5.3)
	U/T1, V/T2, W/T3	2	2 - 3.5	8	M3	⊖	0.5 - 0.6 (4.4 - 5.3)
	-, +1, +2	2	2 - 3.5	8	M3	⊖	0.5 - 0.6 (4.4 - 5.3)
	B1, B2	2	2 - 3.5	8	M3	⊖	0.5 - 0.6 (4.4 - 5.3)
	⏚	3.5 *2	2 - 5.5 *2	-	M4	⊕	1.2 - 1.5 (10.6 - 13.3)
2012	R/L1, S/L2, T/L3	2	2 - 3.5	8	M3	⊖	0.5 - 0.6 (4.4 - 5.3)
	U/T1, V/T2, W/T3	2	2 - 3.5	8	M3	⊖	0.5 - 0.6 (4.4 - 5.3)
	-, +1, +2	3.5	2 - 5.5	8	M3	⊖	0.5 - 0.6 (4.4 - 5.3)
	B1, B2	2	2 - 3.5	8	M3	⊖	0.5 - 0.6 (4.4 - 5.3)
	⏚	3.5 *2	2 - 5.5 *2	-	M4	⊕	1.2 - 1.5 (10.6 - 13.3)
2018	R/L1, S/L2, T/L3	3.5	2 - 5.5	10	M4	⊖	1.5 - 1.7 (13.5 - 15)
	U/T1, V/T2, W/T3	3.5	2 - 5.5	10	M4	⊖	1.5 - 1.7 (13.5 - 15)
	-, +1, +2	5.5	3.5 - 8	10	M4	⊖	1.5 - 1.7 (13.5 - 15)
	B1, B2	2	2 - 3.5	10	M4	⊖	1.5 - 1.7 (13.5 - 15)
	⏚	5.5 *2	2 - 5.5 *2	-	M4	⊕	1.2 - 1.5 (10.6 - 13.3)
2021	R/L1, S/L2, T/L3	5.5	3.5 - 8	10	M4	⊖	1.5 - 1.7 (13.5 - 15)
	U/T1, V/T2, W/T3	3.5	3.5 - 5.5	10	M4	⊖	1.5 - 1.7 (13.5 - 15)
	-, +1, +2	8	2 - 8	10	M4	⊖	1.5 - 1.7 (13.5 - 15)
	B1, B2	2	2 - 3.5	10	M4	⊖	1.5 - 1.7 (13.5 - 15)
	⏚	5.5 *2	2 - 5.5 *2	-	M4	⊕	1.2 - 1.5 (10.6 - 13.3)
2030	R/L1, S/L2, T/L3	8	2 - 14	10	M4	⊖	1.5 - 1.7 (13.5 - 15)
	U/T1, V/T2, W/T3	8	2 - 14	10	M4	⊖	1.5 - 1.7 (13.5 - 15)
	-, +1, +2	14	3.5 - 14	10	M4	⊖	1.5 - 1.7 (13.5 - 15)
	B1, B2	3.5	2 - 5.5	10	M4	⊖	1.5 - 1.7 (13.5 - 15)
	⏚	5.5 *2	5.5 - 14	-	M5	⊕	2.0 - 2.5 (17.7 - 22.1)

Model	Terminal	Recommended Gauge mm²	Applicable Gauge mm²	Wire Stripping Length *1 mm	Terminal Screw		Tightening Torque N·m (in·lb)
					Size	Shape	
2042	R/L1, S/L2, T/L3	14	3.5 - 14	10	M4	⊖	1.5 - 1.7 (13.5 - 15)
	U/T1, V/T2, W/T3	14	3.5 - 14	10	M4	⊖	1.5 - 1.7 (13.5 - 15)
	-, +1, +2	22	5.5 - 30	18	M5	⊖	• ≤ 22 mm² 2.3 - 2.5 (19.8 - 22) • 30 mm² ≤ 4.1 - 4.5 (36 - 40)
	B1, B2	5.5	3.5 - 8	10	M4	⊖	1.5 - 1.7 (13.5 - 15)
	⏚	8 *2	5.5 - 14	-	M5	⊕	2.0 - 2.5 (17.7 - 22.1)
2056	R/L1, S/L2, T/L3	22	5.5 - 30	18	M5	⊖	• ≤ 22 mm² 2.3 - 2.5 (19.8 - 22) • 30 mm² ≤ 4.1 - 4.5 (36 - 40)
	U/T1, V/T2, W/T3	14	5.5 - 22	18	M5	⊖	2.3 - 2.5 (19.8 - 22)
	-, +1, +2	30	8 - 30	18	M5	⊖	• ≤ 22 mm² 2.3 - 2.5 (19.8 - 22) • 30 mm² ≤ 4.1 - 4.5 (36 - 40)
	B1, B2	14	2 - 14	10	M4	⊖	1.5 - 1.7 (13.5 - 15)
	⏚	8 *2	8 - 22	-	M6	⊕	5.4 - 6.0 (47.8 - 53.1)
2070	R/L1, S/L2, T/L3	30	8 - 38	20	M6	⑤	5 - 5.5 (45 - 49)
	U/T1, V/T2, W/T3	22	5.5 - 30	20	M6	⑤	5 - 5.5 (45 - 49)
	-, +1, +2	38	14 - 50	20	M6	⑤	5 - 5.5 (45 - 49)
	B1, B2	14	5.5 - 14	10	M4	⊖	1.5 - 1.7 (13.5 - 15)
	⏚	14	8 - 22	-	M6	⊕	5.4 - 6.0 (47.8 - 53.1)
2082	R/L1, S/L2, T/L3	38	14 - 50	20	M6	⑤	5 - 5.5 (45 - 49)
	U/T1, V/T2, W/T3	30	8 - 38	20	M6	⑤	5 - 5.5 (45 - 49)
	-, +1, +2	50	22 - 60	20	M6	⑤	5 - 5.5 (45 - 49)
	B1, B2	14	5.5 - 14	10	M4	⊖	1.5 - 1.7 (13.5 - 15)
	⏚	14	8 - 22	-	M6	⊕	5.4 - 6.0 (47.8 - 53.1)

*1 Remove insulation from the ends of wires to expose the length of wire shown.

*2 If you turn on the built-in EMC filter, the leakage current of the drive will be more than 3.5 mA. Use these closed-loop crimp terminals or equivalent to connect a protective ground wire that has a minimum cross-sectional area of 10 mm² (copper wire).

- 8-4NS from JST Mfg. Co., Ltd.
- R8-4S from NICHIFU Co.,Ltd.

Single-Phase 200 V Class (UL-compliance)

Model	Terminal	Recommended Gauge mm²	Applicable Gauge mm²	Wire Stripping Length *1 mm	Terminal Screw		Tightening Torque N·m (in·lb)
					Size	Shape	
B001	L/L1, N/L2	2	2	6.5	M3	⊖	0.5 - 0.6 (4.4 - 5.3)
	U/T1, V/T2, W/T3	2	2	6.5	M3	⊖	0.5 - 0.6 (4.4 - 5.3)
	-, +1	2	2	6.5	M3	⊖	0.5 - 0.6 (4.4 - 5.3)
	B1, B2	2	2	6.5	M3	⊖	0.5 - 0.6 (4.4 - 5.3)
	⏚	2 *2	2 *2	-	M3.5	⊕	0.8 - 1.0 (7.1 - 8.9)
B002	L/L1, N/L2	2	2	6.5	M3	⊖	0.5 - 0.6 (4.4 - 5.3)
	U/T1, V/T2, W/T3	2	2	6.5	M3	⊖	0.5 - 0.6 (4.4 - 5.3)
	-, +1	2	2	6.5	M3	⊖	0.5 - 0.6 (4.4 - 5.3)
	B1, B2	2	2	6.5	M3	⊖	0.5 - 0.6 (4.4 - 5.3)
	⏚	2 *2	2 *2	-	M3.5	⊕	0.8 - 1.0 (7.1 - 8.9)
B004	L/L1, N/L2	2	2	6.5	M3	⊖	0.5 - 0.6 (4.4 - 5.3)
	U/T1, V/T2, W/T3	2	2	6.5	M3	⊖	0.5 - 0.6 (4.4 - 5.3)
	-, +1	2	2	6.5	M3	⊖	0.5 - 0.6 (4.4 - 5.3)
	B1, B2	2	2	6.5	M3	⊖	0.5 - 0.6 (4.4 - 5.3)
	⏚	2 *2	2 *2	-	M3.5	⊕	0.8 - 1.0 (7.1 - 8.9)
B006	L/L1, N/L2	2	2 - 3.5	8	M3	⊖	0.5 - 0.6 (4.4 - 5.3)
	U/T1, V/T2, W/T3	2	2 - 3.5	8	M3	⊖	0.5 - 0.6 (4.4 - 5.3)
	-, +1	2	2 - 3.5	8	M3	⊖	0.5 - 0.6 (4.4 - 5.3)
	B1, B2	2	2 - 3.5	8	M3	⊖	0.5 - 0.6 (4.4 - 5.3)
	⏚	3.5 *2	2 - 5.5 *2	-	M4	⊕	1.2 - 1.5 (10.6 - 13.3)
B010	L/L1, N/L2	3.5	2 - 5.5	8	M3	⊖	0.5 - 0.6 (4.4 - 5.3)
	U/T1, V/T2, W/T3	2	2 - 3.5	8	M3	⊖	0.5 - 0.6 (4.4 - 5.3)
	-, +1	3.5	2 - 5.5	8	M3	⊖	0.5 - 0.6 (4.4 - 5.3)
	B1, B2	2	2 - 3.5	8	M3	⊖	0.5 - 0.6 (4.4 - 5.3)
	⏚	3.5 *2	2 - 5.5 *2	-	M4	⊕	1.2 - 1.5 (10.6 - 13.3)

Model	Terminal	Recommended Gauge mm²	Applicable Gauge mm²	Wire Stripping Length *1 mm	Terminal Screw		Tightening Torque N·m (in·lb)
					Size	Shape	
B012	L/L1, N/L2	5.5	3.5 - 8	10	M4	⊖	1.5 - 1.7 (13.5 - 15)
	U/T1, V/T2, W/T3	2	2 - 3.5	10	M4	⊖	1.5 - 1.7 (13.5 - 15)
	-, +1	5.5	3.5 - 8	10	M4	⊖	1.5 - 1.7 (13.5 - 15)
	B1, B2	2	2 - 3.5	10	M4	⊖	1.5 - 1.7 (13.5 - 15)
	⏚	3.5 *2	2 - 5.5 *2	-	M4	⊕	1.2 - 1.5 (10.6 - 13.3)
B018	L/L1, N/L2	8	3.5 - 14	10	M4	⊖	1.5 - 1.7 (13.5 - 15)
	U/T1, V/T2, W/T3	3.5	2 - 5.5	10	M4	⊖	1.5 - 1.7 (13.5 - 15)
	-, +1	8	3.5 - 14	10	M4	⊖	1.5 - 1.7 (13.5 - 15)
	B1, B2	2	2 - 3.5	10	M4	⊖	1.5 - 1.7 (13.5 - 15)
	⏚	5.5 *2	4 - 8 *2	-	M5	⊕	2.0 - 2.5 (17.7 - 22.1)

*1 Remove the insulation from the wire ends to the length shown in “Wire Stripping Length”.

*2 If you turn on the built-in EMC filter, the leakage current of the drive will be more than 3.5 mA. Use these closed-loop crimp terminals or equivalent to connect a protective ground wire that has a minimum cross-sectional area of 10 mm² (copper wire).

- 8-4NS from JST Mfg. Co., Ltd.
- R8-4S from NICHIFU Co.,Ltd.

Three-Phase 400 V Class (UL-compliance)

Model	Terminal	Recommended Gauge mm²	Applicable Gauge mm²	Wire Stripping Length *1 mm	Terminal Screw		Tightening Torque N·m (in·lb)
					Size	Shape	
4001	R/L1, S/L2, T/L3	2	2 - 3.5	8	M3	⊖	0.5 - 0.6 (4.4 - 5.3)
	U/T1, V/T2, W/T3	2	2 - 3.5	8	M3	⊖	0.5 - 0.6 (4.4 - 5.3)
	-, +1, +2	2	2 - 3.5	8	M3	⊖	0.5 - 0.6 (4.4 - 5.3)
	B1, B2	2	2 - 3.5	8	M3	⊖	0.5 - 0.6 (4.4 - 5.3)
	⏚	2 *2	2 - 5.5 *2	-	M4	⊕	1.2 - 1.5 (10.6 - 13.3)
4002	R/L1, S/L2, T/L3	2	2 - 3.5	8	M3	⊖	0.5 - 0.6 (4.4 - 5.3)
	U/T1, V/T2, W/T3	2	2 - 3.5	8	M3	⊖	0.5 - 0.6 (4.4 - 5.3)
	-, +1, +2	2	2 - 3.5	8	M3	⊖	0.5 - 0.6 (4.4 - 5.3)
	B1, B2	2	2 - 3.5	8	M3	⊖	0.5 - 0.6 (4.4 - 5.3)
	⏚	2 *2	2 - 5.5 *2	-	M4	⊕	1.2 - 1.5 (10.6 - 13.3)

Model	Terminal	Recommended Gauge mm²	Applicable Gauge mm²	Wire Stripping Length *1 mm	Terminal Screw		Tightening Torque N·m (in·lb)
					Size	Shape	
4004	R/L1, S/L2, T/L3	2	2 - 3.5	8	M3	⊖	0.5 - 0.6 (4.4 - 5.3)
	U/T1, V/T2, W/T3	2	2 - 3.5	8	M3	⊖	0.5 - 0.6 (4.4 - 5.3)
	-, +1, +2	2	2 - 3.5	8	M3	⊖	0.5 - 0.6 (4.4 - 5.3)
	B1, B2	2	2 - 3.5	8	M3	⊖	0.5 - 0.6 (4.4 - 5.3)
	⏚	3.5 *2	2 - 5.5 *2	-	M4	⊕	1.2 - 1.5 (10.6 - 13.3)
4005	R/L1, S/L2, T/L3	2	2 - 3.5	8	M3	⊖	0.5 - 0.6 (4.4 - 5.3)
	U/T1, V/T2, W/T3	2	2 - 3.5	8	M3	⊖	0.5 - 0.6 (4.4 - 5.3)
	-, +1, +2	2	2 - 3.5	8	M3	⊖	0.5 - 0.6 (4.4 - 5.3)
	B1, B2	2	2 - 3.5	8	M3	⊖	0.5 - 0.6 (4.4 - 5.3)
	⏚	3.5 *2	2 - 5.5 *2	-	M4	⊕	1.2 - 1.5 (10.6 - 13.3)
4007	R/L1, S/L2, T/L3	2	2 - 3.5	8	M3	⊖	0.5 - 0.6 (4.4 - 5.3)
	U/T1, V/T2, W/T3	2	2 - 3.5	8	M3	⊖	0.5 - 0.6 (4.4 - 5.3)
	-, +1, +2	2	2 - 3.5	8	M3	⊖	0.5 - 0.6 (4.4 - 5.3)
	B1, B2	2	2 - 3.5	8	M3	⊖	0.5 - 0.6 (4.4 - 5.3)
	⏚	3.5 *2	2 - 5.5 *2	-	M4	⊕	1.2 - 1.5 (10.6 - 13.3)
4009	R/L1, S/L2, T/L3	2	2 - 3.5	8	M3	⊖	0.5 - 0.6 (4.4 - 5.3)
	U/T1, V/T2, W/T3	2	2 - 3.5	8	M3	⊖	0.5 - 0.6 (4.4 - 5.3)
	-, +1, +2	2	2 - 3.5	8	M3	⊖	0.5 - 0.6 (4.4 - 5.3)
	B1, B2	2	2 - 3.5	8	M3	⊖	0.5 - 0.6 (4.4 - 5.3)
	⏚	3.5 *2	2 - 5.5 *2	-	M4	⊕	1.2 - 1.5 (10.6 - 13.3)
4012	R/L1, S/L2, T/L3	2	2 - 3.5	10	M4	⊖	1.5 - 1.7 (13.5 - 15)
	U/T1, V/T2, W/T3	2	2 - 3.5	10	M4	⊖	1.5 - 1.7 (13.5 - 15)
	-, +1, +2	3.5	2 - 5.5	10	M4	⊖	1.5 - 1.7 (13.5 - 15)
	B1, B2	2	2 - 3.5	10	M4	⊖	1.5 - 1.7 (13.5 - 15)
	⏚	3.5 *2	2 - 5.5 *2	-	M4	⊕	1.2 - 1.5 (10.6 - 13.3)

Model	Terminal	Recommended Gauge mm²	Applicable Gauge mm²	Wire Stripping Length *1 mm	Terminal Screw		Tightening Torque N·m (in·lb)
					Size	Shape	
4018	R/L1, S/L2, T/L3	3.5	2 - 5.5	10	M4	⊖	1.5 - 1.7 (13.5 - 15)
	U/T1, V/T2, W/T3	3.5	2 - 5.5	10	M4	⊖	1.5 - 1.7 (13.5 - 15)
	-, +1, +2	5.5	3.5 - 8	10	M4	⊖	1.5 - 1.7 (13.5 - 15)
	B1, B2	2	2 - 3.5	10	M4	⊖	1.5 - 1.7 (13.5 - 15)
	⏚	3.5 *2	2 - 14	-	M5	⊕	2.0 - 2.5 (17.7 - 22.1)
4023	R/L1, S/L2, T/L3	5.5	3.5 - 8	10	M4	⊖	1.5 - 1.7 (13.5 - 15)
	U/T1, V/T2, W/T3	5.5	3.5 - 8	10	M4	⊖	1.5 - 1.7 (13.5 - 15)
	-, +1, +2	5.5	2 - 8	10	M4	⊖	1.5 - 1.7 (13.5 - 15)
	B1, B2	2	2 - 3.5	10	M4	⊖	1.5 - 1.7 (13.5 - 15)
	⏚	3.5 *2	5.5 - 14	-	M5	⊕	2.0 - 2.5 (17.7 - 22.1)
4031	R/L1, S/L2, T/L3	14	2 - 14	10	M4	⊖	1.5 - 1.7 (13.5 - 15)
	U/T1, V/T2, W/T3	8	2 - 14	10	M4	⊖	1.5 - 1.7 (13.5 - 15)
	-, +1, +2	14	3.5 - 22	18	M5	⊖	2.3 - 2.5 (19.8 - 22)
	B1, B2	3.5	2 - 5.5	10	M4	⊖	1.5 - 1.7 (13.5 - 15)
	⏚	5.5 *2	5.5 - 14 *2	-	M6	⊕	5.4 - 6.0 (47.8 - 53.1)
4038	R/L1, S/L2, T/L3	14	5.5 - 14	10	M4	⊖	1.5 - 1.7 (13.5 - 15)
	U/T1, V/T2, W/T3	14	3.5 - 14	10	M4	⊖	1.5 - 1.7 (13.5 - 15)
	-, +1, +2	14	5.5 - 22	18	M5	⊖	2.3 - 2.5 (19.8 - 22)
	B1, B2	5.5	3.5 - 8	10	M4	⊖	1.5 - 1.7 (13.5 - 15)
	⏚	8 *2	5.5 - 14	-	M6	⊕	5.4 - 6.0 (47.8 - 53.1)
4044	R/L1, S/L2, T/L3	14	5.5 - 22	18	M5	⊖	2.3 - 2.5 (19.8 - 22)
	U/T1, V/T2, W/T3	14	5.5 - 22	18	M5	⊖	2.3 - 2.5 (19.8 - 22)
	-, +1, +2	22	5.5 - 30	18	M5	⊖	• ≤ 22 mm² 2.3 - 2.5 (19.8 - 22) • 30 mm² ≤ 4.1 - 4.5 (36 - 40)
	B1, B2	8	2 - 14	10	M4	⊖	1.5 - 1.7 (13.5 - 15)
	⏚	8 *2	5.5 - 14	-	M6	⊕	5.4 - 6.0 (47.8 - 53.1)

Model	Terminal	Recommended Gauge mm²	Applicable Gauge mm²	Wire Stripping Length *1 mm	Terminal Screw		Tightening Torque N·m (in·lb)
					Size	Shape	
4060	R/L1, S/L2, T/L3	22	5.5 - 30	18	M5	⊖	• ≤ 22 mm² 2.3 - 2.5 (19.8 - 22) • 30 mm² ≤ 4.1 - 4.5 (36 - 40)
	U/T1, V/T2, W/T3	14	5.5 - 22	18	M5	⊖	2.3 - 2.5 (19.8 - 22)
	-, +1, +2	30	8 - 30	18	M5	⊖	• ≤ 22 mm² 2.3 - 2.5 (19.8 - 22) • 30 mm² ≤ 4.1 - 4.5 (36 - 40)
	B1, B2	14	3.5 - 14	10	M4	⊖	1.5 - 1.7 (13.5 - 15)
	⏚	8 *2	5.5 - 14	-	M6	⊕	5.4 - 6.0 (47.8 - 53.1)

*1 Remove insulation from the ends of wires to expose the length of wire shown.

*2 If you turn on the built-in EMC filter, the leakage current of the drive will be more than 3.5 mA. Use these closed-loop crimp terminals or equivalent to connect a protective ground wire that has a minimum cross-sectional area of 10 mm² (copper wire).

- 8-4NS from JST Mfg. Co., Ltd.
- R8-4S from NICHIFU Co.,Ltd.

◆ Main Circuit Terminal and Motor Wiring

This section outlines the various steps, precautions, and checkpoints for wiring the main circuit terminals and motor terminals.

WARNING! *Fire Hazard. Do not connect main power supply wiring to drive motor terminals U/T1, V/T2, and W/T3. Connect main power supply wiring to main circuit input terminals R/L1, S/L2, and T/L3. Incorrect wiring can cause serious injury or death from fire.*

WARNING! *Sudden Movement Hazard. Make sure that you align the phase order for the drive and motor when you connect the motor to drive output terminals U/T1, V/T2, and W/T3. If the phase order is incorrect, it can cause the motor to run in reverse. If the motor accidentally runs in reverse, it can cause serious injury or death.*

NOTICE: *Do not connect phase-advancing capacitors, LC/RC noise filters, or leakage breakers (RCM/RCD) to the motor circuit. If you connect these devices to the output circuits, it can cause damage to the drive and connected equipment.*

■ Cable Length Between Drive and Motor

When the wiring between the drive and the motor is too long, voltage drop along the motor cable can decrease motor torque, usually at low frequency output. If you connect motors in parallel with long motor cable, this is also a problem. Drive output current increases when the leakage current from the cable increases. An increase in leakage current can cause overcurrent and decrease the precision of the current detection.

Use the values in Table 3.3 to adjust the drive carrier frequency. For systems that have 100 m (328 ft) or longer motor wiring, if you use metal conduits or isolated cables for each phase, it will increase stray capacitance.

Table 3.3 Carrier Frequency against Cable Length Between Drive and Motor

Wiring Distance Between the Drive and Motor	50 m (164 ft) Maximum	100 m (328 ft) Maximum	More than 100 m (328 ft)
Carrier Frequency	15 kHz or less	5 kHz or less	2 kHz or less

Note:

- To set the carrier frequency in a drive that is operating more than one motor, calculate the cable length as the total distance of wiring to all connected motors.
- If the length of the wire between the drive and an induction motor is longer than 100 m (328 ft), set *A1-02 = 0 [V/f Control]*.
- The maximum cable length between the drive and a PM motor is 100 m (328 ft).
- If the cable length between the drive and the motor is too long when *A1-02 = 6 [PM AOLVector]* or *8 [EZ Vector]*, change the setting to *A1-02 = 5 [PM OLVector]*.
- When you connect to a PM motor, it can be necessary to adjust the overcurrent detection. Refer to *L8-27: OverCurr Det Gain on page 672* for more information.

■ Ground Wiring

Follow the precautions to wire the ground for one drive or a series of drives.

WARNING! *Electrical Shock Hazard. Make sure that the protective ground wire conforms to technical standards and local safety regulations. The IEC/EN 61800-5-1:2007 standard specifies that you must wire the power supply to automatically de-energize when the protective ground wire disconnects. If you turn on the internal EMC filter, the leakage current of the drive will be more than 3.5 mA. You can also connect a protective ground wire that has a minimum cross-sectional area of 10 mm^2 (copper wire). If you do not obey the standards and regulations, it can cause serious injury or death.*

WARNING! *Electrical Shock Hazard. Ground the neutral point on the power supply of drive models 2xxxE, BxxxE, and 4xxxE to comply with the EMC Directive before you turn on the EMC filter or if there is high resistance grounding. If the EMC filter is switched ON without the neutral point being grounded or if there is high resistance grounding, it can cause death or serious injury.*

WARNING! *Electrical Shock Hazard. Use a ground wire that complies with technical standards on electrical equipment and use the minimum length of ground wire. Incorrect equipment grounding can cause serious injury or death from dangerous electrical potentials on the equipment chassis.*

WARNING! *Electrical Shock Hazard.*
Correctly ground the ground terminals. Obey federal and local electrical wiring codes for correct grounding methods. The maximum grounding resistance is
- *200 V class: ground to 100 Ω or less*
- *400 V class: ground to 10 Ω or less*

If you touch electrical equipment that is not grounded, it can cause serious injury or death.

Note:
- Only use the drive grounding wire to ground the drive. Do not share the ground wire with other devices such as welding machines or large-current electrical equipment. Incorrect equipment grounding can cause drive or equipment malfunction from electrical interference.
- To connect more than one drive to the same grounding circuit, follow the instructions in the instruction manual. Incorrect equipment grounding can cause drive or equipment malfunction from electrical interference.

Do not loop the grounding wire when connecting more than one drive.

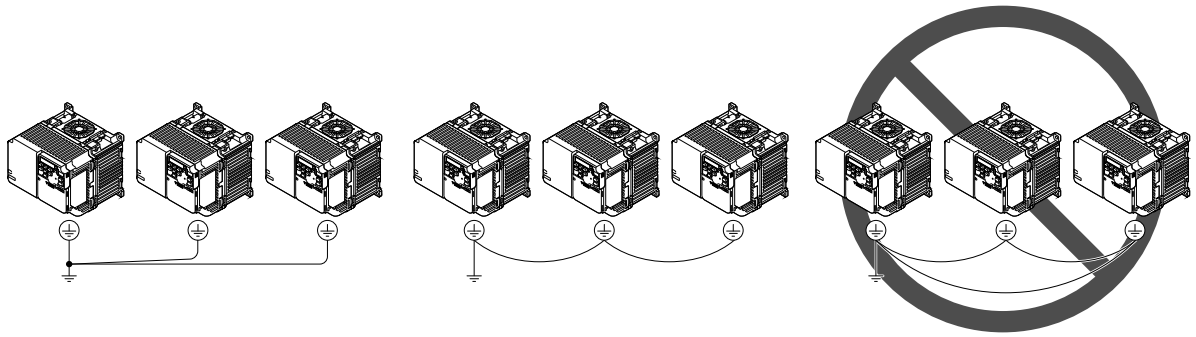

Figure 3.3 Wiring More than One Drive

■ Wiring the Main Circuit Terminal Block

WARNING! *Electrical Shock Hazard. Before you wire the main circuit terminals, make sure that MCCB and MC are OFF. If you touch electrical equipment when MCCB and MC are ON, it can cause serious injury or death.*

■ Main Circuit Configuration

The DC power supply for the main circuit also supplies power to the control circuit.

WARNING! *Fire Hazard. Do not connect a braking resistor to terminals +1 or -. Use terminals B1 and B2 for the braking resistor connections. If you connect a braking resistor to the incorrect terminals, it can cause damage to the drive and braking circuit and serious injury or death.*

NOTICE: *Do not use the negative DC bus terminal "-" as a ground terminal. This terminal is at high DC voltage potential. Incorrect wiring connections can cause damage to the drive.*

Note:

Drive models B001A to B018A, 2001A to 2082A, and 4001A to 4060A do not have a built-in EMC filter.

Models B001 - B004

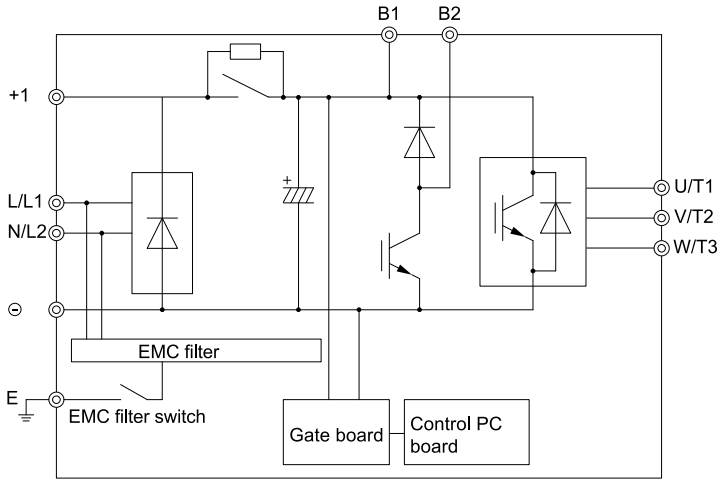

Models B006 - B012

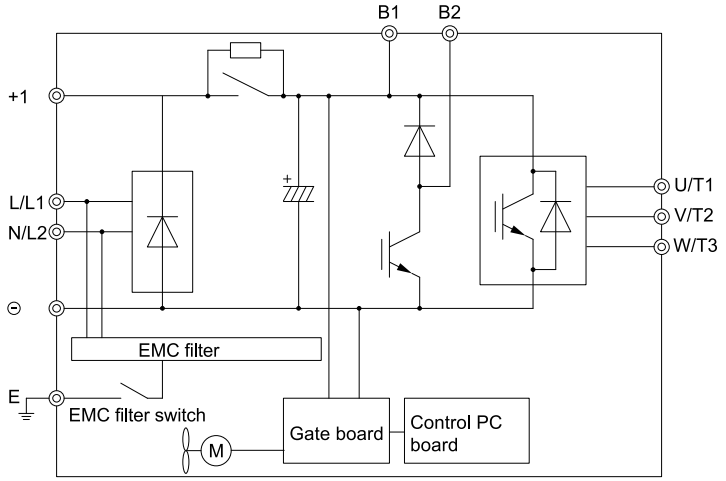

Models 2001 - 2004, 4001 - 4004

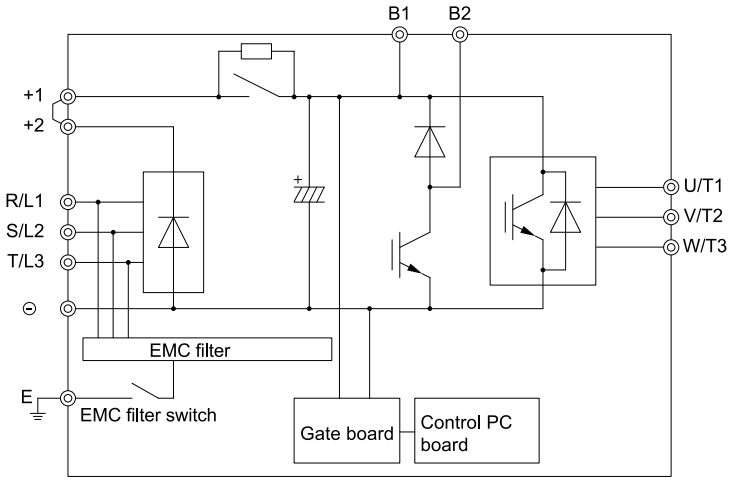

Models 2006 - 2082, 4005 - 4060

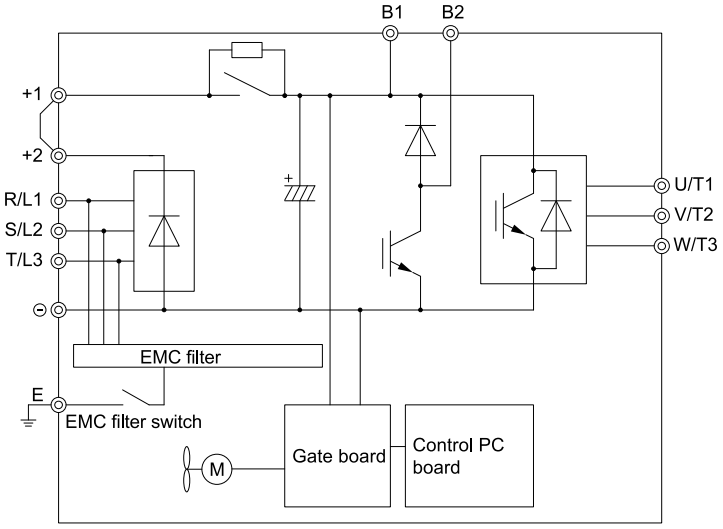

3.4 Main Circuit Terminal Block Wiring Procedure

DANGER! *Electrical Shock Hazard. Do not examine, connect, or disconnect wiring on an energized drive. Before servicing, disconnect all power to the equipment and wait for the time specified on the warning label at a minimum. The internal capacitor stays charged after the drive is de-energized. The charge indicator LED extinguishes when the DC bus voltage decreases below 50 Vdc. When all indicators are OFF, measure for dangerous voltages to make sure that the drive is safe. If you do work on the drive when it is energized, it will cause serious injury or death from electrical shock. The drive has internal capacitors that stay charged after you de-energize the drive.*

◆ Notes on Wiring the Main Circuit Terminal Block

Read these notes before you wire the main circuit terminal block.

- Use UL-Listed, vinyl-coated insulated copper wires for operation with a continuous maximum permitted temperature of 75 °C at 600 V.
- Remove all unwanted objects that are near the terminal block connections.
- Remove the insulation from the connection wires to the wire stripping lengths shown in the manual.
- Do not use bent or crushed wires. Remove the damaged end of the wire before you use it. Incorrect connections can cause death or serious injury from fire.
- Do not solder stranded wire. Soldered wire connections can become loose over time and cause unsatisfactory drive performance.
- If you use stranded wire, make sure that all of the wire strands are in the connection. Also, do not twist the stranded wire too much. Incorrect connections can cause death or serious injury from fire.
- Put the wire all the way into the terminal block. Remove the insulation from the wire to the recommended wire stripping length to fit the wire with insulation in the plastic housing.
- Use a torque driver, torque ratchet, or torque wrench for the screws. A slotted driver or a hex tool will be necessary to wire the screw clamp terminal. Use applicable tools as specified by the recommended conditions in the product manual.
- If you use power tools to tighten the terminal screws, use a low speed setting (300 to 400 r/min). Failure to obey can cause damage to the terminal screws.
- Wire gauges on existing drive models to be replaced may not match wire gauge ranges on new drives. Refer to the drive manuals for correct wire sizes.
- Do not tighten the terminal screws at an angle of 5 degrees or more. Failure to obey can cause damage to the terminal screws.

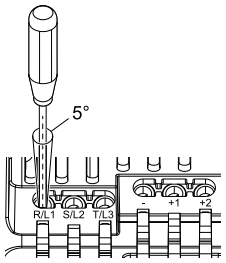

Figure 3.4 Permitted Angle

- Put the bit all the way into the hex socket to tighten the hex socket cap screw.
- When you tighten slotted screws, hold the straight-edge screwdriver perpendicularly to the screw. Make sure that you align the end of the straight-edge screwdriver with the screw groove.

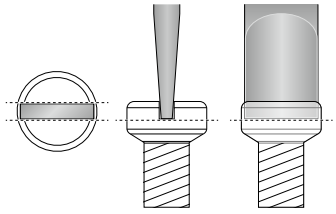

Figure 3.5 Tightening Slotted Screws

- After connecting the wires to the terminal block, lightly pull on the wires to make sure that they do not come out of the terminals.
- Do not let strain on the wiring cause damage. Use a strain relief near the wiring to release the tension. Refer to Figure 3.6 for an example.

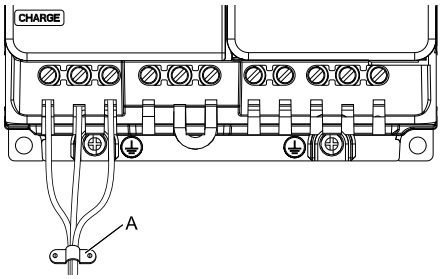

A - Cable clamp

Figure 3.6 Strain Relief Example

Table 3.4 Recommended Wiring Tools

Screw Size	Screw Shape	Wire Gauge	Adapter	Bit Model (Manufacturer)	Torque Driver Model (Tightening Torque)	Torque Wrench (Tightening Torque)
M3	⊖	-	Bit	SF-BIT-SL 0,5X3,0-70 (PHOENIX CONTACT)	TSD-M 1,2NM (0.3 - 1.2 N·m (2.7 - 10.6 in·lb))	-
M4	⊖	-	Bit	SF-BIT-SL 1,0X4,0-70 (PHOENIX CONTACT)	TSD-M 3NM (1.2 - 3.0 N·m (10.6 - 26.6 in·lb))	-
M5 *1	⊖	≤ 25 mm² (AWG 10)	Bit	SF-BIT-SL 1,2X6,5-70 (PHOENIX CONTACT)	TSD-M 3NM (1.2 - 3.0 N·m (10.6 - 26.6 in·lb))	-
		≥ 30 mm² (AWG 8)			-	4.1 - 4.5 N·m (36.3 - 39.8 in·lb) *2 *3
M6	⑤ (WAF: 5 mm)	-	Bit	SF-BIT-HEX 5-50 (PHOENIX CONTACT)	-	5 - 9 N·m (44.3 - 79.7 in·lb) *2 *3

*1 When you wire drive models 2042, 2056, 4031, 4038, 4044, and 4060, select the correct tools for the wire gauge.
*2 Use 6.35 mm (0.25 in) bit socket holder.
*3 Use a torque wrench that can apply this torque measurement range.

◆ Main Circuit Terminal Block Wiring Procedure

When terminals R/L1, S/L2, T/L3, -, +1, and +2 have IP20 protection covers, remove them.

1. Put a wire with prepared ends into the main circuit terminal block.

   Look through the opening in the drive case to make sure that you correctly installed the wires into the terminal block.

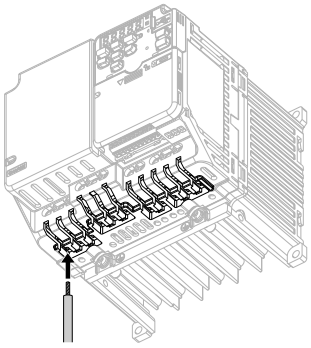

Figure 3.7 Install the Electrical Wire

Note:
There is a jumper between terminals +1 and +2. Remove the jumper, then wire to terminals +1 and +2.

2. Tighten the screws to the specified torque.

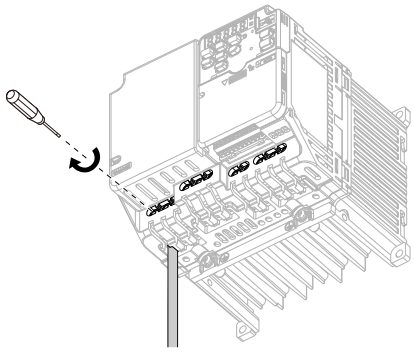

Figure 3.8 Tighten Terminal Block Screws

If you removed IP20 protection covers, install them into their initial positions.

3.5 Control Circuit Wiring

◆ Control Circuit Connection Diagram

Wire the drive control circuit as shown.

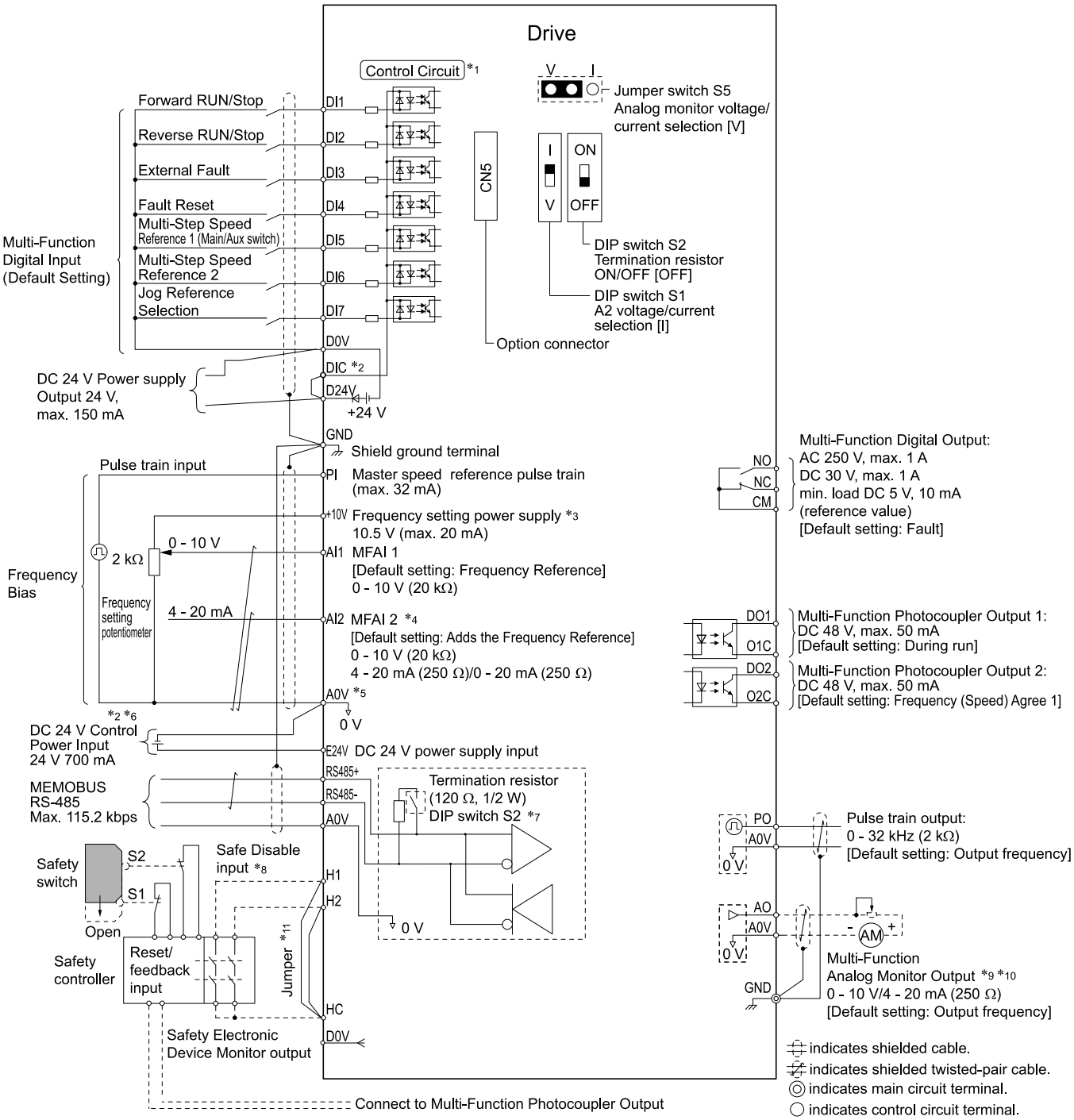

Figure 3.9 Control Circuit Connection Diagram

*1 Connect a 24 V power supply to terminals E24V-A0V to operate the control circuit while the main circuit power supply is OFF.

*2 Install the wire jumpers between terminals DIC-D24V and DIC-D0V to set the MFDI power supply (sinking/sourcing mode or internal/external power supply).

NOTICE: *Do not close the circuit between terminals D24V and D0V. A closed circuit between these terminals will cause damage to the drive.*

- Sinking Mode: Install a jumper between terminals DIC and D24V.

  NOTICE: *Do not close the circuit between terminals DIC and D0V. A closed circuit between these terminals will cause damage to the drive.*

- Sourcing Mode: Install a jumper between terminals DIC and D0V.

  NOTICE: *Do not close the circuit between terminals DIC and D24V. A closed circuit between these terminals will cause damage to the drive.*

- External Power Supply: No jumper is necessary between terminals DIC-D0V and terminals DIC-D24V.

*3 The maximum output current capacity for terminal +10V on the control circuit is 20 mA.

NOTICE: *Damage to Equipment. Do not install a jumper between terminals +10V and A0V. A closed circuit between these terminals will cause damage to the drive.*

*4 DIP switch S1 sets terminal AI2 for voltage or current input. The default setting for S1 is current input ("I" side).

*5 Do not ground the control circuit terminals A0V or connect them to the drive.

NOTICE: *Do not ground the AC control circuit terminals and only connect the A0V terminals according to the product instructions. If you connect the AC terminals incorrectly, it can cause damage to the drive.*

*6 Do not connect terminals E24V and A0V inversely. Failure to obey will cause damage to the drive.

*7 Set DIP switch S2 to the ON position to enable the termination resistor in the last drive when you use Modbus communications.

*8 To use the internal power supply with the Safe Disable input, use sourcing mode.

*9 Disconnect the wire jumpers between H1 and HC and H2 and HC to use the Safe Disable input.

*10 Use multi-function analog monitor outputs with analog frequency meters, ammeters, voltmeters, and wattmeters. Do not use monitor outputs with feedback-type signal devices.

*11 Jumper S5 sets terminal AO for voltage or current output. The default setting for S5 is voltage output ("V" side).

◆ Control Circuit Terminal Block Functions

Hx-xx parameters set functions for the multi-function input and output terminals.

WARNING! *Sudden Movement Hazard. Correctly wire and test all control circuits to make sure that the control circuits operate correctly. If you use a drive that has incorrect control circuit wiring or operation, it can cause death or serious injury.*

NOTICE: *The drive can fail if users frequently turn the drive ON and OFF with the MC on the power source side to Run and Stop the drive. Incorrect operation can decrease the service life of the relay contacts and electrolytic capacitors. If you frequently use the magnetic contactor on the power source side to Run and Stop the drive, it can cause drive failure.*

■ Multi-function Input Terminals

This chapter contains a list of input terminals and functions.

Table 3.5 Digital Inputs

Terminal	Name (Default)	Function (Signal Level)
DI1	MFDI selection 1 (ON: Forward run OFF: Stop)	• Photocoupler • 24 V, 6 mA **Note:** To set the MFDI power supply (Sinking/Sourcing Mode or internal/external power supply), install wire jumpers between terminals DIC-D24V and DIC-D0V. • Sinking Mode: Install a jumper between terminals DIC and D24V. **NOTICE:** *Do not close the circuit between terminals DIC and D0V. A closed circuit between these terminals will cause damage to the drive.* • Sourcing Mode: Install a jumper between terminals DIC and D0V. **NOTICE:** *Do not close the circuit between terminals DIC and D24V. A closed circuit between these terminals will cause damage to the drive.* • External Power Supply: No jumper is necessary between terminals DIC-D0V and terminals DIC-D24V.
DI2	MFDI selection 2 (ON: Reverse run OFF: Stop)	
DI3	MFDI selection 3 (External fault (N.O.))	
DI4	MFDI selection 4 (Fault reset)	
DI5	MFDI selection 5 (Multi-step speed reference 1)	
DI6	MFDI selection 6 (Multi-step speed reference 2)	
DI7	MFDI selection 7 (Jog command)	
D0V	MFDI power supply 0 V	MFDI power supply, 24 V (maximum 150 mA) **NOTICE:** *Do not close the circuit between terminals D24V and D0V. A closed circuit between these terminals will cause damage to the drive.*
DIC	MFDI selection common	
D24V	MFDI power supply +24 Vdc	

Table 3.6 Safe Disable Input

Terminal	Name (Default)	Function (Signal Level)
H1	Safe Disable input 1	Remove the jumper between terminals H1-HC and H2-HC to use the Safe Disable input. • 24 V, 6 mA • ON: Normal operation • OFF: Coasting motor • Internal impedance 4.7 kΩ • OFF Minimum OFF time of 3 ms.
H2	Safe Disable input 2	
HC	Safe Disable function common	Safe Disable function common **NOTICE:** *Do not close the circuit between terminals HC and D0V. A closed circuit between these terminals will cause damage to the drive.*

Table 3.7 Master Frequency Reference

Terminal	Name (Default)	Function (Signal Level)
PI	Master frequency reference pulse train input (Master frequency reference)	• Response frequency: 0 Hz to 32 kHz • H level duty: 30% to 70% • H level voltage: 3.5 V to 13.2 V • L level voltage: 0.0 V to 0.8 V • Input impedance: 3 kΩ
+10V	Power supply for frequency setting	10.5 V (allowable current 20 mA maximum)
AI1	MFAI1 (Master frequency reference)	Voltage input • 0 V to 10 V/100% (input impedance: 20 kΩ)
AI2	MFAI2 (Combined to terminal AI1)	Voltage input or current input Use DIP switch S1 and *H3-09 [AI2 Signal Level Select]* to select the input. • 0 V to 10 V/100% (input impedance: 20 kΩ) • 4 mA to 20 mA/100%, 0 mA to 20 mA/100% (input impedance: 250 Ω)
A0V	Frequency reference common	0 V
GND	Connecting shielded cable	-

■ Output Terminals

This chapter contains a list of Output terminals and functions.

Table 3.8 Digital Outputs

Terminal	Name (Default)	Function (Signal Level)
NO	N.O. output (Fault)	• Relay output • 30 Vdc, 10 mA to 1 A • 250 Vac, 10 mA to 1 A • Minimum load: 5 V, 10 mA (Reference value)
NC	N.C. output (Fault)	
CM	Digital output common	

Table 3.9 Multi-function Photocoupler Outputs

Terminal	Name (Default)	Function (Signal Level)
DO1	Multi-function photocoupler output 1 (During RUN)	• Photocoupler output • 48 V, 2 mA to 50 mA **Note:** Connect a flywheel diode when you drive a reactive load such as a relay coil. Make sure that the diode rating is larger than the circuit voltage.
O1C		
DO2	Multi-function photocoupler output 2 (Speed agree 1)	
O2C		

Table 3.10 Control Circuit Monitor Output Terminals

Terminal	Name (Default)	Function (Signal Level)
PO	Pulse train output (Output frequency)	32 kHz (maximum) Refer to “Pulse Train Output” for more information.
AO	Analog monitor output (Output frequency)	Select voltage or current output. • 0 V to 10 V/0% to 100% • 4 mA to 20 mA (Receiver recommended impedance: 250 Ω) **Note:** Select using jumper switch S5 and *H4-07 [AO Signal Level Select]*.
A0V	Monitor common	0 V

■ External Power Supply Input Terminals

This chapter contains a list of the functions of the external power supply input terminals.

Table 3.11 External Power Supply Input Terminals

Terminal	Name (Default)	Function
E24V	External 24 V power supply input	Supplies backup power to the drive control circuit, keypad, and option board. 21.6 VDC to 26.4 VDC, 700 mA
A0V	External 24 V power supply ground	0 V

Alarm Display When You Use External 24 V Power Supply

When you use an external 24 V power supply, an alarm is detected as shown below if you set *o2-23 [Ext24V Off Warning Display]* and *o2-26 [Ext24V Mode Warning Display]* for the main circuit power supply. Set the alarm display as needed.

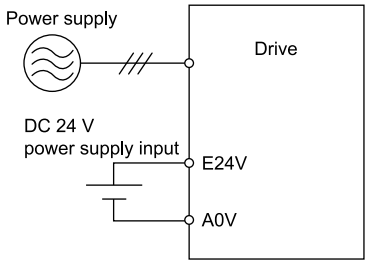

Table 3.12 Power Supply Used and the Alarm Display

Main circuit power supply	External 24 V power supply	o2-23 [Ext24V Off Warning Display]	o2-26 [Ext24V Mode Warning Display]	Alarm display
ON	ON	-	-	-
ON	OFF	0 [Disabled]	-	-
		1 [Enabled]	-	*L24v [Loss of External Power 24 Supply]*
OFF	ON	-	0 [Disabled]	"Ready" LED light flashes quickly
		-	1 [Enabled]	*EP24v [External Power 24V Supply]*

■ Serial Communication Terminals

This chapter contains a list of serial communication terminals and functions.

Table 3.13 Modbus Communication

Terminal	Terminal Name	Function (Signal Level)	
RS485+	Communication input/output (+)	Modbus communications Use an RS-485 cable to connect the drive. **Note:** Set DIP switch S2 to ON to enable the termination resistor in the last drive in a Modbus network.	• RS-485 • Modbus communication protocol • Maximum 115.2 kbps
RS485-	Communication output (-)		
A0V	Signal ground	0 V	

◆ Control Circuit Terminal Configuration

The control circuit terminals are in the positions shown in this chapter.

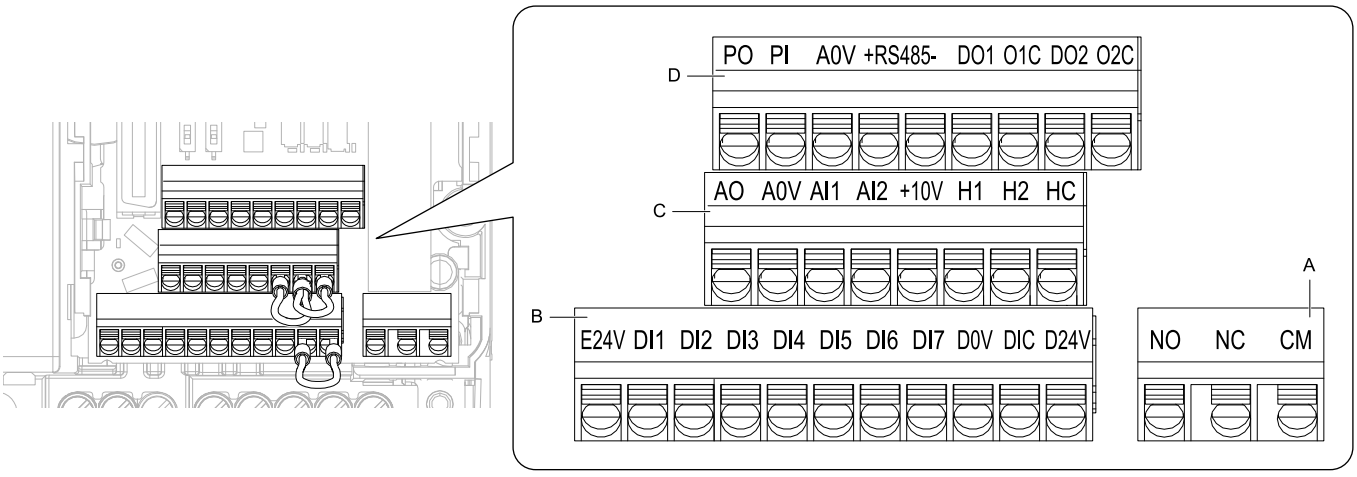

A - Terminal block (TB2)
B - Terminal block (TB1-1)
C - Terminal block (TB1-2)
D - Terminal block (TB1-3)

Figure 3.10 Control Circuit Terminal Arrangement

■ Control Circuit Wire Gauges and Tightening Torques

Use the tables in this chapter to select the correct wires. Use shielded wire to wire the control circuit terminal block. Use crimp ferrules on the wire ends to make the wiring procedure easier and more reliable.

Table 3.14 Control Circuit Wire Gauges and Tightening Torques

Terminal Block	Terminal	Bare Wire		Crimp Ferrule	
		Recommended Gauge mm² (AWG)	Applicable Gauge mm² (AWG)	Recommended Gauge mm² (AWG)	Applicable Gauge mm² (AWG)
TB1-1	E24V, DI1 - DI7, D0V, DIC, D24V	0.75 (18)	• Stranded wire 0.25 - 1.0 (24 - 17) • Solid wire 0.25 - 1.5 (24 - 16)	0.5 (20)	0.25 - 0.5 (24 - 20)
TB1-2	AO, A0V, AI1, AI2, +10V, H1, H2, HC				
TB1-3	PO, PI, A0V, RS485+, RS485-, DO1, O1C, DO2, O2C				
TB2	NO, NC, CM	0.75 (18)	• Stranded wire 0.25 - 1.5 (24 - 16) • Solid wire 0.25 - 1.5 (24 - 16)	0.5 (20)	0.25 - 1.0 (24 - 17)

Crimp Ferrules

Attach an insulated sleeve to the wire when you use crimp ferrules. We recommend the CRIMPFOX 6 crimping tool from PHOENIX CONTACT.

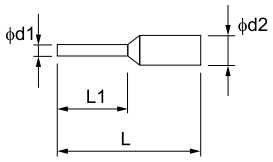

Figure 3.11 External Dimensions of Crimp Ferrules

Table 3.15 Crimp Ferrule Models and Dimensions

Wire Gauge mm² (AWG)	Model	L (mm)	L1 (mm)	d1 (mm)	d2 (mm)
0.25 (24)	AI 0.25-6 YE, AI 0.25-6 BU	10.5	6	0.8	2.0
0.34 (22)	AI 0.34-6 TQ	10.5	6	0.8	2.0
0.5 (20)	AI 0.5-6 WH, AI 0.5-6 OG	11	6	1.1	2.5
0.75 (18)	AI 0.75-6 GY, AI 0.75-6 WH	12	6	1.3	2.8
1.0 (17)	AI 1-6 RD, AI 1-6 YE	12	6	1.5	3.0

◆ Wiring the Control Circuit Terminal

Wire the grounding terminal and main circuit terminals, then wire the control circuit terminals.

WARNING! *Electrical Shock Hazard. Do not remove covers or touch circuit boards while the drive is energized. If you touch the internal components of an energized drive, it can cause serious injury or death.*

NOTICE: *Do not let wire shields touch other signal lines or equipment. Insulate the wire shields with electrical tape or shrink tubing. If you do not insulate the wire shields, it can cause a short circuit and damage the drive.*

Note:

- Use a Class 2 power supply to connect external power to the control terminals. If the power supply for peripheral devices is incorrect, it can cause a decrease in drive performance.
- Connect the shield of shielded cable to the applicable ground terminal. Incorrect equipment grounding can cause drive or equipment malfunction from electrical interference.
- Isolate wiring for contact output terminals NO, NC, CM, DO1, O1C, DO2, and O2C from other control circuit wiring. The drive and connected equipment will malfunction or the drive can trip because of incorrect wiring.
- Isolate control circuit wiring from main circuit wiring (terminals R/L1, S/L2, T/L3, L/L1, N/L2, B1, B2, U/T1, V/T2, W/T3, -, +1, +2) and other high-power wiring. If control circuit wiring is adjacent to main circuit wiring, it can cause incorrect operation of the drive and equipment from electrical interference.

1. Remove the front cover from the drive.

   To move Jumper S5, also remove the keypad.

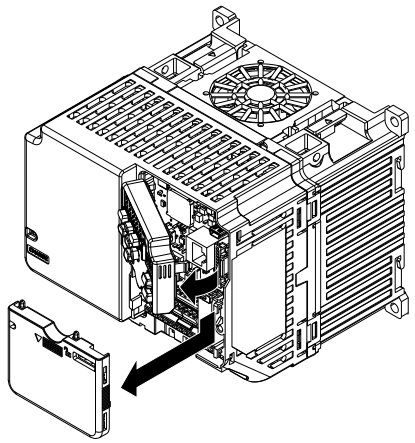

Figure 3.12 Remove the Front Cover

2. Refer to the following figure and wire the control circuit.

   Use a flat bladed screwdriver with a blade width of 2 .5mm (0.1 in) or less and thickness of 0.4 mm (0.01 in) or less.

   WARNING! *Fire Hazard. Tighten all terminal screws to the correct tightening torque. Connections that are too loose or too tight can cause incorrect operation and damage to the drive. Incorrect connections can also cause death or serious injury from fire.*

Note:

- Use shielded, twisted-pair wires and ground the shield to the ground terminal of the drive. Incorrect equipment grounding can cause drive or equipment malfunction from electrical interference.
- Do not use control circuit wiring that is longer than 50 m (164 ft) to supply the analog frequency reference from a remote source. If the control circuit wiring is too long, it can cause unsatisfactory system performance.

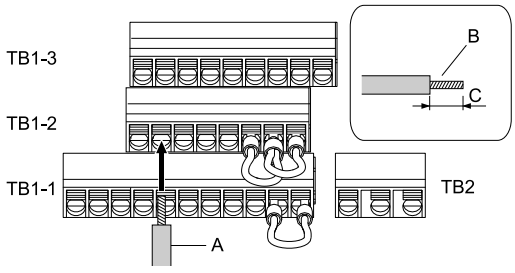

A - Wire with a crimp ferrule attached, or unsoldered wire with the core wires lightly twisted

B - Pull back the shielding and lightly twist the end with your fingers to keep the ends from fraying.

C - Remove approximately 5.5 mm (0.21 in) of the covering at the end of the wire if you do not use crimp ferrules.

Figure 3.13 Wiring Procedure for the Control Circuit

Note:
- Do not solder the core wire. Soldered wiring connections can become loose and cause the drive to malfunction.
- Prepare the wire ends of shielded twisted-pair wires as shown below to use an analog reference from an external frequency setting potentiometer to set the frequency. Connect the shield to terminal GND of the drive.

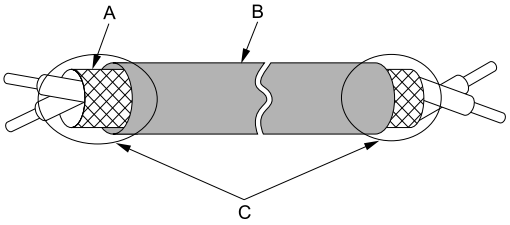

A - Connect the shield to terminal GND of the drive.
B - Sheath
C - Insulate with electrical tape or shrink tubing.

Figure 3.14 Prepare the Ends of Shielded Wire

3. Attach the front cover.

   If you moved Jumper S5, attach the keypad before you attach the front cover.

   If you did not move Jumper S5, attach the front cover.

   Make sure that you do not pinch wires or signal lines between the front cover and the drive before you reattach the cover.

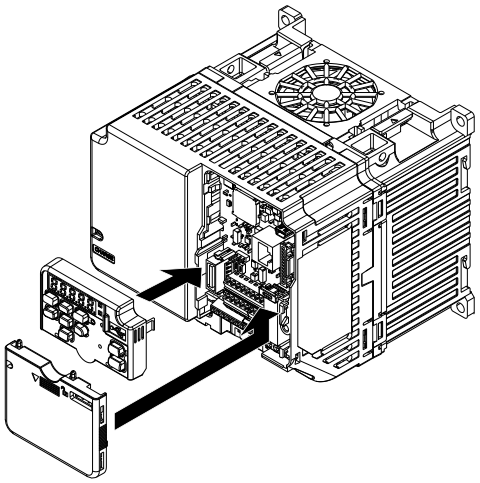

Figure 3.15 Reattach the Front Cover

◆ Switches and Jumpers on the Terminal Board

The terminal board has switches to adapt the drive I/Os to the external control signals. Set the switches to select the functions for each terminal.

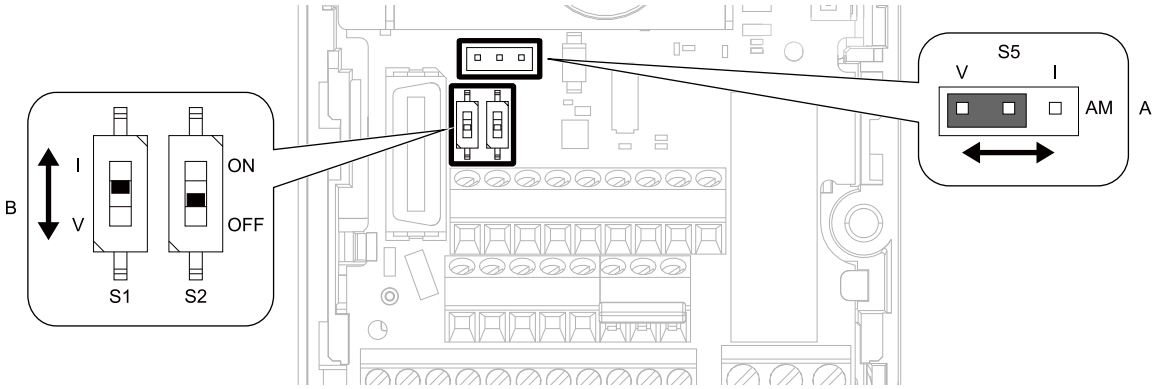

Figure 3.16 Locations of Switches

Table 3.16 I/O Terminals and Switches Functions

Position	Switch	Terminal	Function	Default
A	Jumper switch S5	AO	Sets the output method for terminal AO (voltage or current).	V (voltage output)
B	DIP switch S1	AI2	Sets the input method for terminal AI2 (voltage or current).	I (current input)
	DIP Switch S2	-	Enables and disables the Modbus communications termination resistor.	OFF

3.6 Control I/O Connections

This section gives information about the settings for the listed control circuit I/O signals.

- MFDI (terminals DI1 to DI7)
- Pulse train output (terminal PO)
- MFAI (terminal AI2)
- MFAO (terminal AO)
- Modbus communications (terminals RS485+, RS485-, A0V)

◆ Set Sinking Mode/Sourcing Mode

Close the circuit between terminals DIC-D24V and DIC-D0V to set the sinking mode/sourcing mode and the internal/external power supply for the MFDI terminals. The default setting for the drive is internal power supply sinking mode.

NOTICE: *Do not close the circuit between terminals D24V and D0V. A closed circuit between these terminals will cause damage to the drive.*

Mode	Internal Power Supply (Terminal D0V-D24V)	External 24 V power supply
Sinking Mode (NPN)	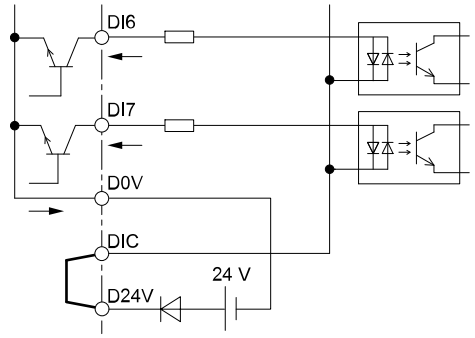	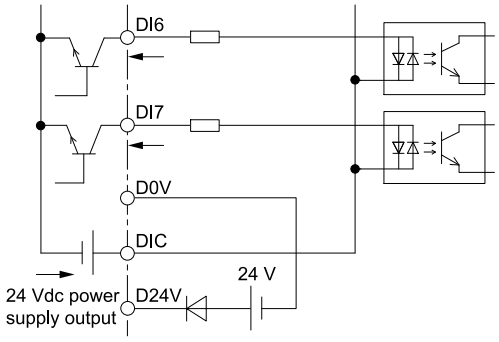
Sourcing Mode (PNP)	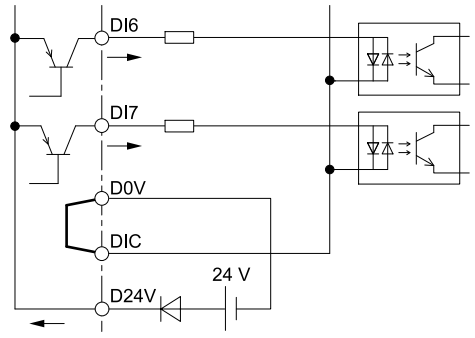	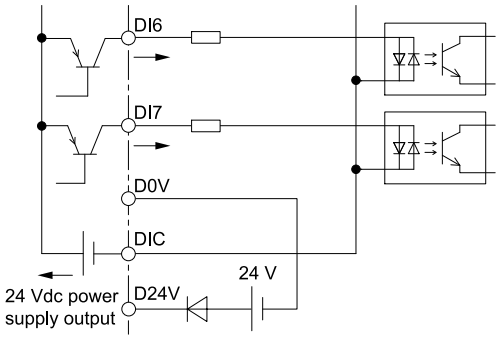

◆ Pulse Train Output

You can use pulse train monitor output terminal PO for sourcing mode or for sinking mode.

- Use for sourcing mode
  The load impedance changes the voltage level of the pulse train output signal.

Load Impedance R_L(kΩ)	Output Voltage V_{PO}(V)
1.5 kΩ or more	5 V or more
4.0 kΩ or more	8 V or more
10 kΩ or more	10 V or more

Note:
Use the formula below to calculate the necessary load resistance (kΩ) to increase output voltage V_{PO}(V).

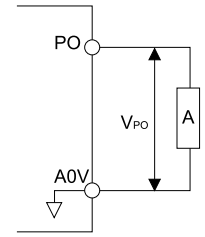

$R_L = V_{PO} \times 2 / (12 - V_{MP})$

A - Load Impedance

Figure 3.17 Wiring to Use Pulse Train Output in Sourcing Mode

- Use in sinking mode
  The external power supply changes the voltage level of the pulse train output signal. Keep the voltage from an external source between 10.8 Vdc to 16.5 Vdc. Adjust the load impedance to keep the current at 16 mA or lower.

External Power Supply (V)	Load Impedance (kΩ)	Sinking current (mA)
10.8 Vdc to 16.5 Vdc	1.0 kΩ or more	16 mA maximum

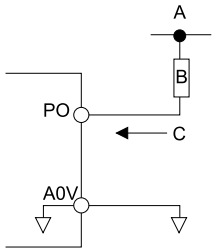

A - External power supply
B - Load Impedance
C - Sinking current

Figure 3.18 Wiring to Use Pulse Train Output in Sinking Mode

◆ Set the Input Signal for the MFAI Terminal AI2

Use terminal AI2 to input a voltage or a current signal.

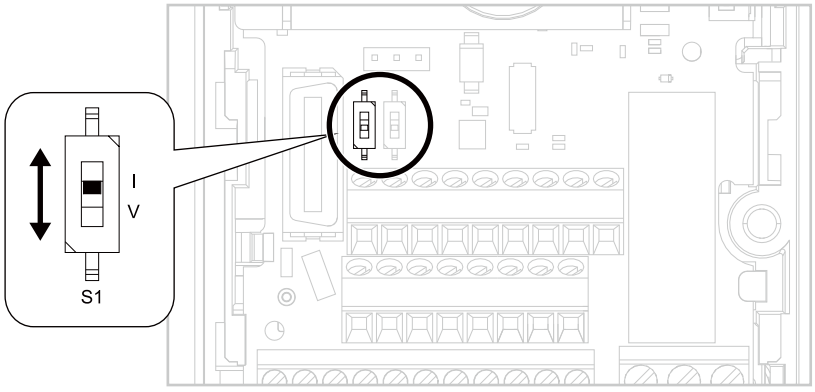

Figure 3.19 Location of DIP Switch S1

Table 3.17 MFAI Terminal AI2 Signal Settings

Input Signal	DIP Switch S1 Settings	Parameter Signal Level
Current input	I (Default)	H3-09 = 2: 4 mA to 20 mA/0% to 100% (input impedance: 250 Ω) H3-09 = 3: 0 mA to 20 mA/0% to 100% (input impedance: 250 Ω)
Voltage input	V	H3-09 = 0: 0 V to 10 V/0% to 100% (with zero limit) (input impedance: 20 kΩ) H3-09 = 1: 0 V to 10 V/0% to 100% (without zero limit) (input impedance: 20 kΩ)

Note:
Use tweezers or a jig with a tip width of approximately 0.8 mm (0.03 in) to set DIP switches.

◆ Set the Output Signal for the MFAO Terminal AO

Set the signal type for terminal AO to voltage or current output. Use jumper S5 and *H4-07 [AO Signal Level Select]* to set the signal type.

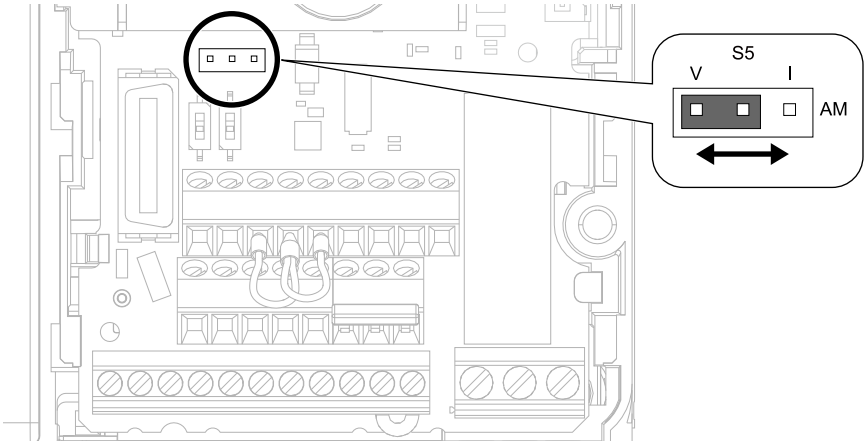

Figure 3.20 Location of Jumper Switch S5

Table 3.18 MFAO Terminal AO Signal Settings

Types of Output Signals	Jumper S5	Parameter Signal Level
Voltage output (Default)	V I AM	H4-07 = 0: 0 V to 10 V
Current output	V I AM	H4-07 = 2: 4 mA to 20 mA

◆ Switch ON Termination Resistor for Modbus Communications

When the drive is the last slave in a Modbus communications, set DIP switch S2 to the ON position. This drive has a built-in termination resistor for the RS-485 interface.

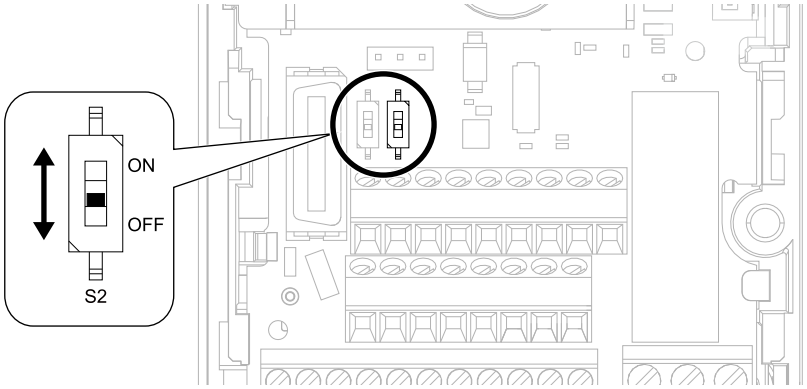

Figure 3.21 Location of DIP Switch S2

Table 3.19 Modbus Communications Termination Resistor Setting

DIP Switch S2	Description
ON	The built-in termination resistor is ON.
OFF (Default)	The built-in termination resistor is OFF.

3.7 Connect the Drive to a PC

The drive has a mini-B type USB port.

You can use a USB cable (USB 2.0, type: A - mini-B) to connect the drive to a type-A USB port on a PC. After you connect the drive to the PC, you can use Q2Edit software to monitor drive performance and manage parameter settings.

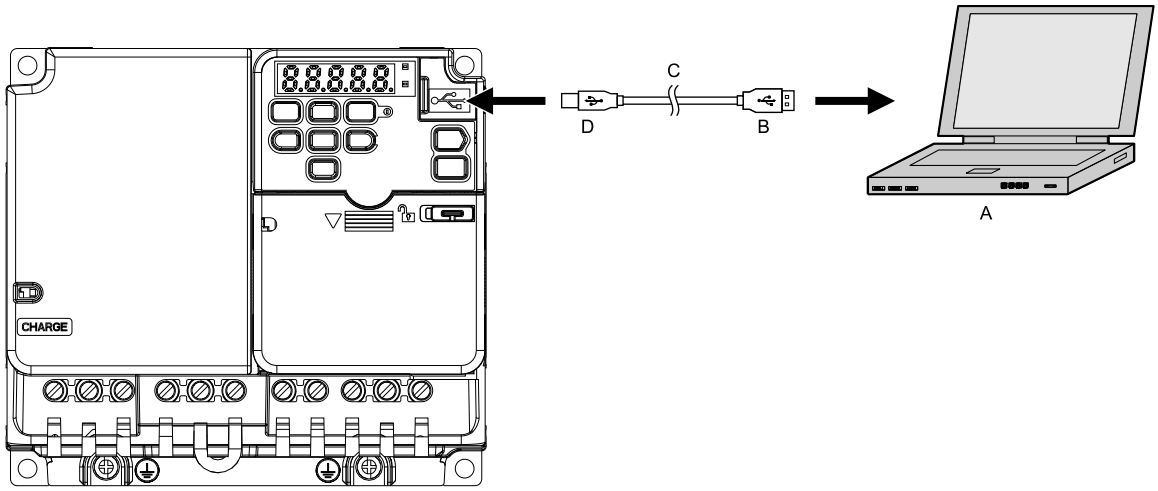

A - PC
B - Type-A connector
C - USB 2.0, type A - mini-B cable
D - Mini-B type connector

Figure 3.22 Connect to a PC (USB)

A USB cable with connectors connected with shielded wires is recommended.

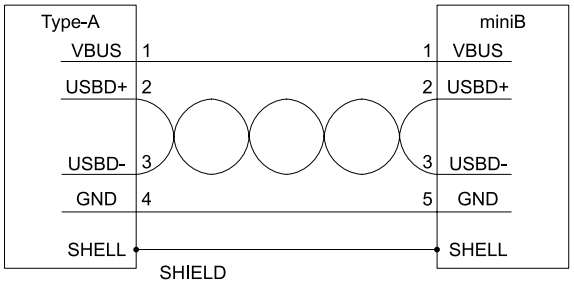

Figure 3.23 Recommended USB Cable

3.8 External Interlock

For applications that will have unwanted effects on the system if the drive stops, make an interlock between MFDO terminals set to *H2-xx = 3 [MFDO Function Select = Fault]* and *H2-xx = 1 [Drive Ready]*.

◆ Drive Ready

When the drive is operating or is prepared to accept a Run command, the MFDO terminal to which *Drive Ready [H2-xx = 1]* is set will enter the ON status.

In these conditions, Drive Ready is OFF and the drive ignores Run commands:

- The drive is de-energized
- During a fault
- There is problem with the control power supply
- There is a parameter setting error that will not let the drive run, although a Run command is entered
- An overvoltage or undervoltage fault occurs when the Run command is entered
- The drive is in Programming Mode.

◆ Interlock Circuit Example

This is an example of how two drives that run one application use the Drive Ready and Fault output signals to interlock with the controller.

Terminal	Output Signal	Parameter Settings for Output Signal
NO, NC, CM	Fault	H2-01 = 3
DO1-O1C	Drive Ready	H2-02 = 1

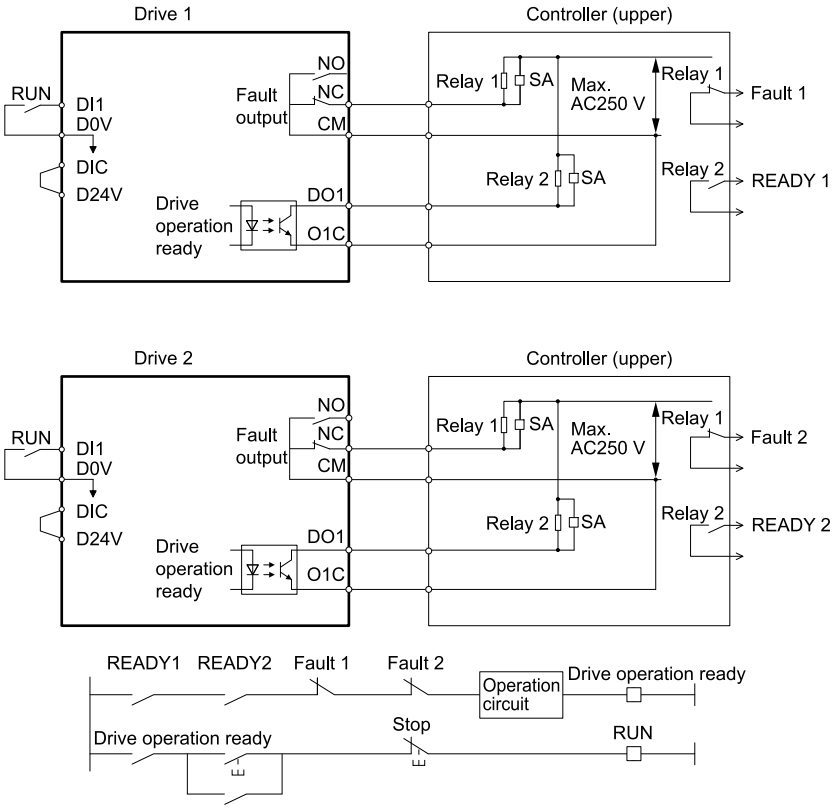

Figure 3.24 Interlock Circuit Example

3.9 Braking Resistor Installation

A braking resistor or braking resistor unit (dynamic braking option) helps stop the motor quickly and smoothly when there is high load inertia.

If you try to decelerate a motor in less time than usual for a coast to stop, the motor will rotate faster than the synchronous speed that aligns with the set frequency. This will cause the motor to become an induction generator. The inertia energy of the motor and regenerate to the drive and charge the drive DC bus capacitor and increase the voltage. If the voltage is more than the overvoltage level, an *ov [Overvoltage]* will occur. To prevent these overvoltage faults, a dynamic braking option is necessary.

WARNING!
Set L3-04 = 0 [StallP@Decel Enable = Disabled] when you operate the drive with:
- *a regenerative converter*
- *regenerative unit*
- *braking resistor*
- *braking resistor unit.*

If you set the parameter incorrectly, the drive can decelerate for too long and cause serious injury or death.

NOTICE: *Before you connect a dynamic braking option to the drive, make sure that qualified personnel read and obey the Braking Unit and Braking Resistor Unit Installation Manual (TOBPC72060001). If you do not read and obey the manual or if personnel are not qualified it can cause damage to the drive and braking circuit.*

Note:
- Select the correct braking circuit size to dissipate the power that is necessary to decelerate the load in the correct time. Before you run the drive, make sure that the braking circuit can dissipate the energy for the set deceleration time.
- To install a dynamic braking option, set *L8-01 = 0 [3%ERF DBR Protection = Disabled]*.

WARNING! *Fire Hazard. Do not connect a braking resistor to terminals +1 or -. Use terminals B1 and B2 for the braking resistor connections. If you connect a braking resistor to the incorrect terminals, it can cause damage to the drive and braking circuit and serious injury or death.*

NOTICE: *Connect braking resistors to the drive as shown in the connection diagram examples. If you wire the braking circuits incorrectly, it can cause damage to the drive or equipment.*

To connect a Yaskawa ERF series braking resistor to the drive, set *L8-01 = 1 [Enabled]*.

To use a non-ERF-type braking resistor, connect a thermal overload relay between the drive and the braking resistor and set a circuit to turn OFF the drive power at the trip contacts of the thermal overload relay.

◆ Install a Braking Resistor: ERF-Type

Connect a braking resistor to drive models 2001 to 2021, B001 to B018, and 4001 to 4012. When you use a braking resistor, set *L8-01 = 1 [3%ERF DBR Protection = Enabled]* and set one of the MFDO parameters *H2-01 to H2-03 = 4C [MFDO Function Select = BrkRes Fault]*. Use a sequence to turn OFF the power with a MFDO.

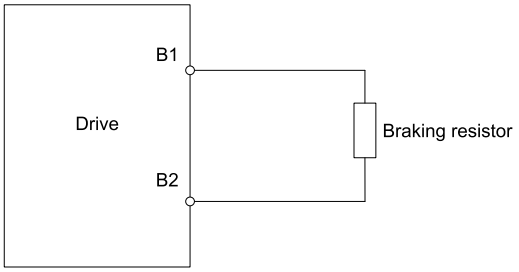

Figure 3.25 Install an ERF-Type Braking Resistor

◆ Install a Braking Resistor Unit: LKEB-Type

Connect the braking resistor unit as shown. To install a braking resistor unit, set *L8-01 = 0 [3%ERF DBR Protection = Disabled]*.

This product has a built-in braking transistor.

To prevent overheating the braking resistor unit, set a sequence to de-energize the drive at the trip contacts of the thermal overload relay.

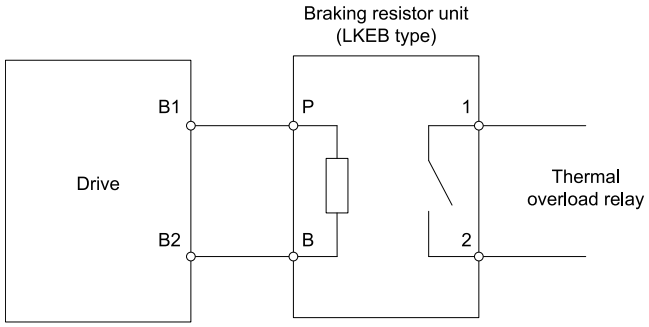

Figure 3.26 Install a Braking Resistor Unit: LKEB-Type

◆ Dynamic Braking Option Overload Protection

To prevent overheating the dynamic braking option, set a sequence to de-energize the drive at the trip contacts of the thermal overload relay.

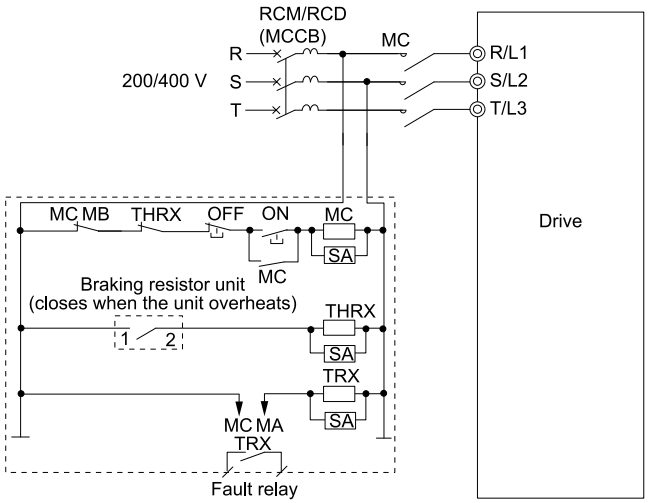

Figure 3.27 Power Supply Interrupt for Overheat Protection Example

WARNING! *Fire Hazard. When you use a braking unit, use a thermal relay on the braking resistors and set a fault contact output for the braking resistor unit to disconnect drive main power through an input contactor. Incorrect braking circuit protection can cause the resistors to become too hot and cause serious injury or death.*

3.10 Drive Wiring Protection

◆ Installing a Earth Leakage Circuit Breaker (RCM/RCD)

When the drive output does switches at high speeds, it causes high frequency leakage current. To prevent electrical shock and fires caused by ground fault protection that is not sufficient, install an RCM/RCD. Use a high frequency RCM/RCD at the power input side of the drive and make sure that each drive has a minimum cumulative sensitivity amperage of 30 mA. The specialized breaker detects only the leakage current from frequency bands that are dangerous to humans.

If a device does not have protection against high frequencies, high frequency leakage currents can cause the device to malfunction. If you have a malfunction on a device that is not protected, decrease the carrier frequency of the drive, switch to a better breaker, or use an RCM/RCD with a minimum cumulative sensitivity amperage of 200 mA for each drive.

These conditions can have an effect on leakage current:

- Drive capacity
- Carrier frequency
- Wiring distance and types of motor cables
- EMI/RFI filter

To prevent damage and injury to personnel and drives, use a high-frequency RCM/RCD that is rated for AC and DC power supplies.

Note:

The manufacturer recommends the following RCMs/RCDs, which are designed to operate with high frequencies.
- Mitsubishi Electric Corporation; NV series
- Schneider Electric; NS series

You can use a molded-case circuit breaker (MCCB) as a replacement for an RCM/RCD that is upstream in the power supply system.

◆ Install a Molded-Case Circuit Breaker (MCCB) or Residual Current Monitor/ Device (RCM/RCD)

Install a molded-case circuit breaker (MCCB) or a ground fault circuit interrupter (RCM/RCD) for line protection between the power supply and main circuit power supply input terminals R/L1, S/L2, and T/L3. The MCCB/ RCM/RCD give overload protection and also prevent damage to the main circuit and the devices that are wired to the main circuit.

Use the information in this section to select the correct MCCB or RCM/RCD and to safely connect the device.

- The capacity of the MCCB or GFCI must be 1.5 to 2 times the rated output current of the drive. Use an MCCB or RCM/RCD as an alternative to overheat protection (150% for one minute at the rated output current) to prevent drive faults.
- When you connect more than one drive to one MCCB or RCM/RCD that is shared between multiple drives or with other equipment, use a magnetic contactor (MC) and set a sequence that de-energizes the drive when it outputs errors.

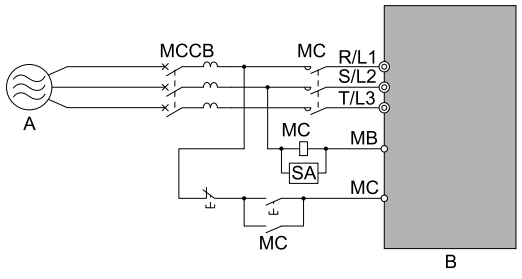

A - Power supply **B - Drive**

Figure 3.28 Connect an MCCB

WARNING! *Electrical Shock Hazard. Use an MCCB, RCM/RCD, or Magnetic Contactor (MC) to de-energize the drive before you wire the main circuit terminal. If the main circuit terminal is energized during wiring, it will cause serious injury or death.*

3.11 Dynamic Braking Option, Motor Protection

◆ Install an Electromagnetic Contactor (MC) at the Input Side of the Drive

You can use an MC as an alternative to a molded case circuit breaker (MCCB) when:

- The protective functions of the drive have been triggered
- An emergency stop occurred, and the sequence de-energizes the drive.

If an MC on the input side of the drive (primary side) stops the drive, regenerative braking will not operate, and the drive will coast to stop.

NOTICE: *When you connect electromagnetic switches or magnetic contactors to the output motor circuits, make sure that you sequence them correctly. If the output motor circuit sequence is incorrect, it can cause damage to the drive.*

NOTICE: *The drive can fail if users frequently turn the drive ON and OFF with the MC on the power source side to Run and Stop the drive. Incorrect operation can decrease the service life of the relay contacts and electrolytic capacitors. If you frequently use the magnetic contactor on the power source side to Run and Stop the drive, it can cause drive failure.*

Note:

- When machinery must not restart after recovery from a momentary power loss that occurred during run, install an MC at the input side of the drive and set a sequence that does not automatically set the Run command to ON after recovery of power.
- When it is necessary to stop momentary power loss, for example to maintain a circuit that has momentary power loss, use a delayed-release MC.
- Use an MC (magnetic contactor) to make sure that you can fully remove power to the drive when necessary. Wire the MC to open when a fault output terminal is triggered.

■ Protect the Braking Resistor/Braking Resistor Unit

Use an MC on the input side (primary side) to prevent damage to the braking resistor/braking resistor unit.

WARNING! *Fire Hazard. When you use a braking unit, use a thermal relay on the braking resistors and set a fault contact output for the braking resistor unit to disconnect drive main power through an input contactor. Incorrect braking circuit protection can cause the resistors to become too hot and cause serious injury or death.*

◆ Install a Thermal Overload Relay on the Drive Output

A thermal overload relay disconnects the power line to the motor during a motor overload condition to prevent damage to the motor. Install a thermal overload relay between the drive and motor in these conditions:

- When operating more than one motor from one drive.
- When operating the motor directly from the power line with a power line bypass.

When operating one motor from one drive, it is not necessary to install a thermal overload relay. The drive has electronic motor overload protection in the drive software.

Note:

- When you install a thermal overload relay, set parameter *L1-01 = 0 [Motor Cool Type for OL1 Calc = Disabled]*.
- Set up a sequence that will trip an external fault (coast to stop) for the contacts of the thermal overload relay.

■ General Precautions When Using Thermal Overload Relays

When you use a motor thermal overload relay on the drive output to prevent nuisance trips and overheating of the motor at low speeds, be sure to think about these application precautions:

- Operation of a low speed motor
- When you operate more than one motor with one drive
- Length of the motor cables
- Nuisance tripping because of high drive carrier frequency

Operation of a Low Speed Motor

Usually, you use thermal overload relays on general-purpose motors (standard motors). When a drive drives a general-purpose motor, the motor current is approximately 5% to 10% more than with a commercial power supply. When a motor with a shaft-driven fan operates at low speeds, the cooling capacity decreases. This can cause the motor to overheat when the load current is in the motor rated value. Enable the electronic thermal protection in the drive when possible to prevent this problem.

The electronic thermal overload function uses the relation between the speed and heat characteristics in the variable speed control range to simulate the cooling ability of general-purpose motors and forced-vented motors to prevent damage to the motor.

When You Operate More than One Motor with One Drive

To disable the overload protection function of the electronic thermal protector of the drive, set *L1-01 = 0 [Motor Cool Type for OL1 Calc = Disabled]*.

Note:

If you operate more than one motor from one drive, you cannot use the electronic thermal protection of the drive.

Length of the Motor Cables

If you use long motor cables with a high carrier frequency, the increased leakage current can cause nuisance tripping of the thermal relay. To prevent this, decrease the carrier frequency or increase the tripping level of the thermal overload relay.

Nuisance Tripping Because of High Drive Carrier Frequency

High carrier frequency PWM drives make current waveforms that can increase the temperature in overload relays. It may be necessary to increase the trip level setting when encountering nuisance triggering of the relay.

WARNING! *Fire Hazard. Before you increase the detection level of the thermal relay, make sure that a secondary problem is not the cause of the overload. Make sure that you know the local codes for electrical wiring, then adjust the electrothermal settings. Incorrect thermal relay adjustment and incorrect wiring can cause serious injury or death.*

3.12 Improve the Power Factor

AC reactors and DC reactors decrease surges in current and improve the power factor on the input side of the drive. Connect an AC reactor or a DC reactor to the input side (primary side) in the these conditions:

- To decrease harmonic current or improve the power factor of the power supply
- When there is switching of phase advancing capacitor
- With a large capacity power supply transformer (600 kVA or more).

Note:

- You can use an AC reactor and DC reactor together.
- When you connect a thyristor converter (for example, a DC drive) to the same power supply system, you should use an AC reactor, regardless of the conditions of the power supply.
- The main circuit terminal block for the drive, and the terminal blocks for the AC and DC reactors come in different shapes. Use caution when you prepare the ends of the wires.

◆ Connect an AC Reactor

Note:

When you connect an AC reactor to the output side (secondary side) of the driver, set *C6-02 = 1 [Carrier Frequency Selection = 2.0 kHz]*.

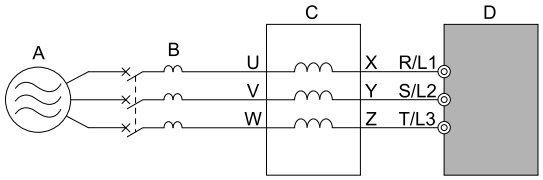

A - Power supply
B - MCCB
C - AC reactor
D - Drive

Figure 3.29 AC Reactor Connection Example

◆ Connect a DC Reactor

When you install a DC reactor, remove the jumper between terminals +1 and +2. If you will not use a DC link choke, do not remove the jumper.

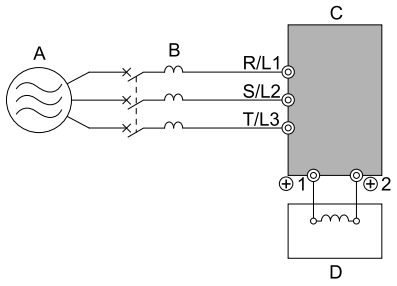

A - Power supply
B - MCCB
C - Drive
D - DC reactor

Figure 3.30 DC Reactor Connection Example

Note:

You cannot connect a DC reactor to drive models B001 to B018.

3.13 Prevent Switching Surge

◆ Connect a Surge Protective Device

A surge protective device decreases the surge voltage that is generated from switching an inductive load near the drive. Inductive loads include:

- Magnetic contactors
- Electromagnetic relays
- Magnetic valves
- Solenoids
- Magnetic brakes.

Always use a surge protective device or diode with inductive loads.

Note:
Do not connect a surge protective device to the drive output side.

3.14 Decrease Noise

Note:

The main circuit terminal block for the drive and the terminal block for the noise filter come in different shapes. Use caution when you prepare the ends of the wires.

◆ Connect a Noise Filter to the Input Side (Primary Side)

High-speed switching makes noise in the drive output. This noise flows from the drive to the power supply, and can possibly have an effect on other equipment. Install a noise filter to the input side of the drive to decrease the quantity of noise that flows to the power supply. A noise filter also prevents noise from entering the drive from the power supply.

- Use a noise filter specially designed for drives.
- Install the noise filter as close as possible to the drive.

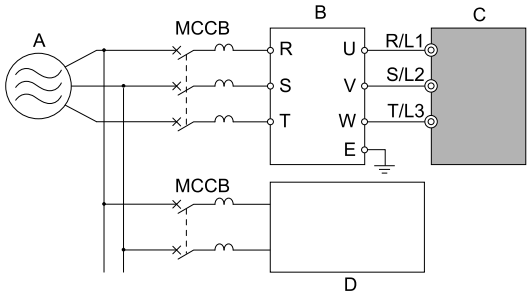

A - Power supply
B - Input side (primary side) noise filter
C - Drive
D - Other controller

Note:

The input side (primary side) noise filter model is LNFD-xx.

Figure 3.31 Example of Connecting the Noise Filter on the Input Side (Primary Side)

◆ Connect a Noise Filter to the Output Side (Secondary Side)

A noise filter on the output side of the drive decreases inductive noise and radio frequency interference.

NOTICE: *Do not connect phase-advancing capacitors, LC/RC noise filters, or leakage breakers (RCM/RCD) to the motor circuit. If you connect these devices to the output circuits, it can cause damage to the drive and connected equipment.*

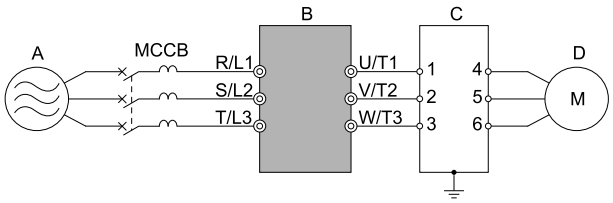

A - Power supply
B - Drive
C - Noise filter on output side (secondary side)
D - Motor

Figure 3.32 Example of Connecting the Noise Filter on the Output Side (Secondary Side)

Note:

Glossary
- Radio frequency interference:
  Electromagnetic waves radiated from the drive and cables make noise through the full radio bandwidth that can have an effect on nearby devices.
- Inductive noise:
  The noise from electromagnetic induction can have an effect on the signal line and can cause the controller to malfunction.

■ Prevent Inductive Noise

In addition to installing a noise filter, you can also run all wiring through a grounded metal conduit to decrease inductive noise occurring at the output side. Put the cables a minimum of 30 cm (11.8 in) away from the signal line to prevent induced noise. Ground the cables to metal conduits.

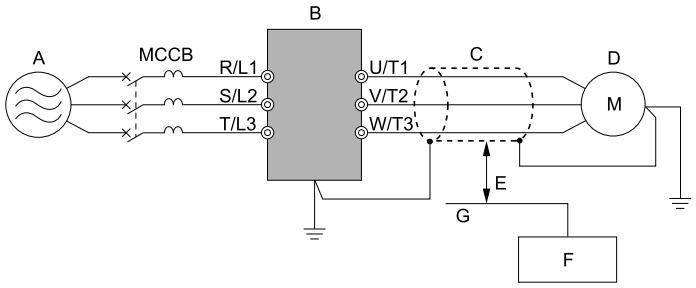

A - Power supply
B - Drive
C - Shielded motor cable
D - Motor
E - Minimum of 30 cm (11.8 in) apart
F - Controller
G - Signal line

Figure 3.33 Prevent Inductive Noise

■ Decrease Radio Frequency Interference

The drive, input lines, and output lines generate radio frequency interference. Use noise filters on input and output sides and install the drive in a steel box to decrease radio frequency interference.

Note:
Keep the cable between the drive and motor as short as possible.

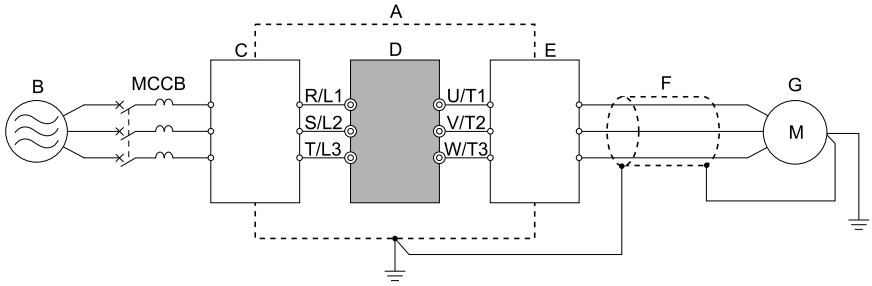

A - Steel box
B - Power supply
C - Noise filter
D - Drive
E - Noise filter
F - Shielded motor cable
G - Motor

Figure 3.34 Decrease Radio Frequency Interference

3.15 Protect the Drive during Failures

◆ Factory-Recommended Branch Circuit Protection for UL Listing

Use branch circuit protection to protect against short circuits and to maintain compliance with UL61800-5-1. The manufacturer recommends connecting semiconductor protection fuses on the input side for branch circuit protection. Refer to *Three-Phase 400 V Class on page 95*, *Single-Phase 200 V Class on page 94*, and *Three-Phase 200 V Class on page 94* for more information.

WARNING! *Electrical Shock Hazard. After the drive blows a fuse or trips an RCM/RCD, do not immediately energize the drive or operate peripheral devices. Wait for the time specified on the warning label at a minimum and make sure that all indicators are OFF. Then check the wiring and peripheral device ratings to find the cause of the problem. If you do not know the cause of the problem, contact the manufacturer before you energize the drive or peripheral devices. If you do not fix the problem before you operate the drive or peripheral devices, it can cause serious injury or death.*

- 200 V class
  Use the fuses specified in this document to prepare the drive for use on a circuit that supplies not more than 31,000 RMS and not more than 240 Vac when there is a short circuit in the power supply.
- 400 V class
  Use the fuses specified in this document to prepare the drive for use on a circuit that supplies not more than 31,000 RMS and not more than 480 Vac when there is a short circuit in the power supply.

The built-in short circuit protection of the drive does not provide branch circuit protection. The user must provide branch circuit protection as specified by the National Electric Code (NEC), the Canadian Electric Code, Part I (CEC), and local codes.

◆ Three-Phase 200 V Class

Table 3.20 Factory-Recommended Branch Circuit Protection: Three-Phase 200 V Class

Drive Model	Maximum Applicable Motor Output kW (HP)		Time Delay Fuse	Semiconductor Protection Fuse Rated Current Manufacturer: EATON/Bussmann	
	ND	HD	Class J, CC, and T Fuse Rated Current A	Model	Input Rated Current A
2001	0.18 (1/6)	0.1 (1/6)	3	FWH-25A14F	25
2002	0.37 (1/4)	0.25 (1/4)	6	FWH-25A14F	25
2004	0.75 (3/4)	0.55 (1/2)	6	FWH-25A14F	25
2006	1.1 (1.5)	0.75 (1)	10	FWH-25A14F	25
2008	1.5 (2)	1.1 (1.5)	15	FWH-70B	70
2010	2.2 (3)	1.5 (2)	20	FWH-70B	70
2012	3.0 (4)	2.2 (3)	25	FWH-70B	70
2018	3.7 (5)	3.0 (4)	30	FWH-90B	90
2021	5.5 (5)	4.0 (5)	40	FWH-90B	90
2030	7.5 (10)	5.5 (7.5)	-	FWH-100B	100
2042	11 (15)	7.5 (10)	-	FWH-150B	150
2056	15 (20)	11 (15)	-	FWH-200B	200
2070	18.5 (25)	15 (20)	-	FWH-200B	200
2082	22 (30)	18.5 (25)	-	FWH-225A	225

◆ Single-Phase 200 V Class

Table 3.21 Factory-Recommended Branch Circuit Protection: Single-Phase 200 V Class

Drive Model	Maximum Applicable Motor Output kW (HP)		Time Delay Fuse	Semiconductor Protection Fuse Rated Current Manufacturer: EATON/Bussmann	
	ND	HD	Class J, T, and CC Fuse Rated Current A	Model	Input Rated Current A
B001	0.18 (1/6)	0.1 (1/6)	3	FWH-25A14F	25
B002	0.37 (1/4)	0.25 (1/4)	6	FWH-25A14F	25

Drive Model	Maximum Applicable Motor Output kW (HP)		Time Delay Fuse	Semiconductor Protection Fuse Rated Current Manufacturer: EATON/Bussmann	
	ND	HD	Class J, T, and CC Fuse Rated Current A	Model	Input Rated Current A
B004	0.75 (3/4)	0.55 (1/2)	10	FWH-60B	60
B006	1.1 (1.5)	1.1 (1)	15	FWH-80B	80
B010	2.2 (3)	1.5 (2)	25	FWH-100B	100
B012	3.0 (3)	2.2 (3)	30	FWH-125B	125
B018	-	4.0 (5)	-	FWH-150B	150

◆ Three-Phase 400 V Class

Table 3.22 Factory-Recommended Branch Circuit Protection: Three-Phase 400 V Class

Drive Model	Maximum Applicable Motor Output kW (HP)		Time Delay Fuse	Semiconductor Protection Fuse Rated Current Manufacturer: EATON/Bussmann	
	ND	HD	Class J, CC, and T Fuse Rated Current A	Model	Input Rated Current A
4001	0.37 (1/2)	0.37 (1/2)	3	FWH-40B	40
4002	0.75 (1)	0.55 (3/4)	6	FWH-40B	40
4004	1.5 (2)	1.1 (2)	10	FWH-50B	50
4005	2.2 (3)	1.5 (3)	10	FWH-70B	70
4007	3.0 (4)	2.2 (3)	15	FWH-70B	70
4009	4.0 (5)	3.0 (4)	20	FWH-90B	90
4012	5.5 (7.5)	4.0 (5)	25	FWH-90B	90
4018	7.5 (10)	5.5 (10)	-	FWH-80B	80
4023	11.0 (15)	7.5 (10)	-	FWH-100B	100
4031	15.0 (20)	11.0 (15)	-	FWH-125B	125
4038	18.5 (25)	15.0 (20)	-	FWH-175B	175
4044	22.0 (30)	18.5 (25)	-	FWH-200B	200
4060	30.0 (40)	22.0 (30)	-	FWH-200B	200

3.16 Wiring Checklist

Wire the drive, examine these items, then do a test run.

Table 3.23 Power Supply Voltage

Checked	No.	Item to Check
	1	The power supply voltage must be in the input voltage specification range of the drive.

Table 3.24 Main Circuit Wiring

Checked	No.	Item to Check
	1	• Put the power supply through a molded-case circuit breaker (MCCB) before it gets to the drive input. • Connect an applicable MCCB.
	2	Correctly wire the power supply to drive terminals R/L1, S/L2, T/L3, L/L1, and N/L2.
	3	Correctly wire the drive and motor together. The motor lines and drive output terminals U/T1, V/T2, and W/T3 must align to make the correct phase order. **Note:** If the phase order is incorrect, the drive will rotate in the opposite direction.
	4	Use 600 V heat resistant indoor PVC wire for the power supply and motor lines. **Note:** Wire gauge recommendations assume use of 600 V class 2 heat-resistant indoor PVC wire.
	5	Use the correct wire gauges for the main circuit. **Note:** • When the wiring distance between the drive and the motor is long, use this formula for the voltage drop in the wire: Motor rated voltage (V) × 0.02 ≥ √3 × wire resistance (Ω/km) × wiring distance (m) × motor rated current (A) × 10^{-3} • When the cable between the drive and motor is longer than 50 m (164 ft), use parameter *C6-02 [Carrier Frequency Selection]* to decrease the carrier frequency.
	6	Correctly ground the drive.
	7	Tighten the main circuit and grounding terminal screws of the drive to a correct tightening torque.
	8	When operating more than one motor from one drive, set up overload protection circuits. 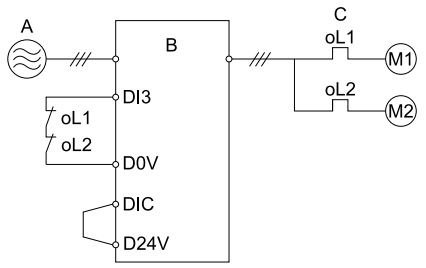 **A - Power supply** **B - Drive** **C - oL1, oL2: Thermal overload relay** **Note:** Set *H1-03 = 25 [DI3 Function Selection = ExF NC-AlCoast]*.
	9	When you use a braking resistor or a braking resistor unit, install an electromagnetic contactor (MC). Correctly install the resistor and make sure that overload protection uses the MC to shut off the power supply.
	10	Make sure you did not install phase advancing capacitors, input noise filters, or ELCBs, GFCIs, RCM/RCDs on the output side of the drive.

Table 3.25 Control Circuit Wiring

Checked	No.	Item to Check
	1	Use twisted-pair cables for all drive control circuit wiring.
	2	Ground the shields of shielded wiring to terminal GND.
	3	For 3-Wire sequence, set parameters for MFDI terminals and wire control circuits.
	4	Correctly install any options.
	5	Examine the drive for other wiring errors. Only use a multimeter to check wiring.
	6	Tighten the control circuit terminal screws of the drive to a correct tightening torque.
	7	Pick up all wire clippings.
	8	Make sure that none of the wires on the terminal block touch other terminals or connections.
	9	Make sure that you isolate the control circuit wiring from main circuit wiring in the control panel or in a duct.

Checked	No.	Item to Check
	10	Make sure that control circuit wiring is not longer than 50 m (164 ft).
	11	Make sure that Safe Disable input wiring is not longer than 30 m (98 ft).

3.17 Motor Application Precautions

◆ Precautions for Existing Standard Motors

■ Low-Speed Range

When a drive operates a standard motor, it will lose more power compared to operating the motor with a commercial power supply. In the low speed range, the temperature of the motor increases quickly because the motor cannot decrease its temperature when the speed decreases. In these conditions, decrease the load torque of the motor in the low-speed range. Figure 3.35 shows the permitted load characteristics for a Yaskawa standard motor. When 100% continuous torque is necessary at low speeds, use a motor designed to operate with a drive.

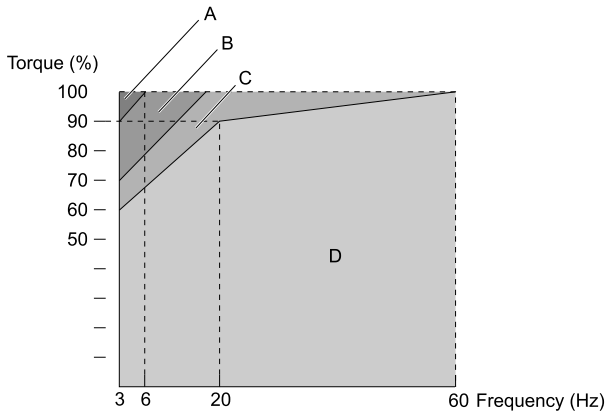

A - 25% ED (or 15 min)
B - 40% ED (or 20 min)
C - 60% ED (or 40 min)
D - Continuous operation

Figure 3.35 Permitted Load Characteristics for a Yaskawa Standard Motors

■ Insulation Withstand Voltage

Consider motor voltage tolerance levels and motor insulation in applications with an input voltage of over 440 V or particularly long wiring distances. Use an insulated drive motor.

NOTICE: *Use an inverter-duty motor or vector-duty motor with reinforced insulation and windings applicable for use with an AC drive. If the motor does not have the correct insulation, it can cause a short circuit or ground fault from insulation deterioration.*

■ High-Speed Operation

If you operate a motor more than its rated speed, you can have problems with the motor bearing durability and dynamic balance of the machine. Contact the motor or machine manufacturer.

■ Torque Characteristics

When you operate a motor with a drive, the torque characteristics are different than when you operate the motor directly from line power. Make sure that you know about the load torque characteristics for your application.

■ Vibration

Vibrations could occur in the these conditions:

- Resonance with the natural frequency of machinery
  Use caution if you add a variable-speed drive to applications that operate the motor from line power at a constant speed. If resonance occurs, install shock-absorbing rubber around the base of the motor and enable the Jump frequency control.
- The motor is not balanced
  Use caution if the motor speed is more than the rated motor speed.
- Subsynchronous resonance
  Subsynchronous resonance can occur with long motor shafts and in applications such as turbines, blowers, and fans with high inertia loads.

■ Audible Noise

The audible noise of the motor changes when the carrier frequency setting changes. When you use a high carrier frequency, audible noise from the motor is equivalent to the motor noise generated when you operate from line power. If you operate at speeds that are more than the rated rotation speed, the unwanted motor noise increases.

◆ Precautions for PM Motors

- Contact the manufacturer or your nearest sales representative to use a PM motor that is not from the drive manufacturer.
- You cannot operate a PM motor from a commercial power supply. If you must operate from a commercial power supply, use an induction motor.
- You cannot operate more than one PM motor from one drive. Use an induction motor and a variable-speed control drive.
- In OLV/PM, the motor can operate in the reverse direction for 1/2 turn (electrical angle) at start up.
- The quantity of generated starting torque changes when the control method and motor type change. Verify the starting torque, permitted load characteristics, impact load tolerance, and speed control range before you set up the motor with the drive. Contact the manufacturer or your nearest sales representative to use a motor that does not meet these specifications.
- In OLV/PM control, braking torque is always 125% or less when operating between 20% and 100% speed. A braking resistor unit will not change the value. Braking torque is 50% or less when operating at 20% speed or less.
- When you use a holding brake in OLV/PM control, release the brake before you start the motor. Failure to set the correct timing can cause a decrease in speed. Do not use these configurations in applications with heavy loads, for example conveyors or elevators.
- To restart a coasting motor that is rotating faster than 120 Hz, first use the Short Circuit Braking function to stop the motor. A special braking resistor unit is necessary for Short Circuit Braking. Contact the manufacturer or your nearest sales representative for more information.
  To restart a coasting motor that is rotating slower than 120 Hz, use the Speed Search function.
  If the motor cable is long, use Short Circuit Braking to stop the motor.

  Note:
  The Short Circuit Braking function uses the drive to forcefully cause a short across the motor wires to stop the motor before it has time to coast to a stop.
- You can also use EZOLV to operate synchronous reluctance motors (SynRM). Contact the manufacturer or your nearest sales representative for more information.
- If *oC [Overcurrent]*, *STPo [Motor Step-Out Detected]*, or *LSo [Low Speed Motor Step-Out]* occur during restart, try Speed Search again and use the Short Circuit Braking function when you start to adjust the motor.

◆ Precautions for Specialized Motors

■ Pole Change Motors

The rated current of pole change motors is different than standard motors. Check the maximum current of the motor before you select a drive. Always stop the motor before you switch between the number of motor poles. If you change the number of poles while the motor is rotating, the overvoltage from regeneration or the overcurrent protection circuitry will make the motor coast to stop.

■ Submersible Motors

The rated current of a submersible motor is more than the rated current of a standard motor. Use a sufficiently large motor cable that will not let voltage drop decrease the maximum torque level.

■ Explosion-Proof Motors

You must test the motor and the drive together for explosion-proof certification. You must also test existing installations of explosion-proof motors. The drive is not designed for explosion-proof areas. Install the drive in a safe location.

The encoder used with pressure-resistant explosion-proof motors is intrinsically safe. When wiring between the drive and encoder, always connect through a specialized pulse coupler.

■ Geared Motors

The continuous speed range is different for different lubricating methods and manufacturers. For oil lubrication, continuous operation in the low-speed range can cause burnout. Contact the manufacturer for more information about applications where operating at more than the rated frequency is necessary.

■ Single-Phase Motors

Variable speed drives are not designed to operate with single-phase motors. The drive is for use with three-phase motors only. If you use capacitors to start the motor, it can cause a high frequency current to flow to the capacitors and can damage the capacitors. A split-phase start or a repulsion start can burn out the starter coils because the internal centrifugal switch is not activated.

■ Motors with Brakes

If you use a drive to operate a motor that has a brake connected to the output side, low voltage levels can cause the brake to possibly not release at start. Use a motor with a brake that has a dedicated source of power for the brake. Connect the brake power supply to the power supply side of the drive. Motors with built-in brakes make noise when operating at low speeds.

◆ Notes on the Power Transmission Mechanism

For power transmission machinery that uses oil to lubricate gearboxes, transmissions, or reduction gears, make sure that you use precaution if you operate the machinery continuously at low speed. Oil does not lubricate the system as well at low speeds. If you operate at frequencies higher than the rated frequency, it can cause problems with the power transmission mechanism. These problems include audible noise, decreased service life, and decreased durability.

4

Startup Procedure and Test Run

4.1 Safety Precautions 102
4.2 Component Names and Functions 103
4.3 Set up the Drive with Manual Setup Mode 106
4.4 Drive Mode and Programming Mode 107
4.5 Start-up Procedures 111
4.6 Items to Check before Starting Up the Drive 115
4.7 Keypad Operation 116
4.8 Automatic Parameter Settings Optimized for Specific Applications (Application Presets) 121
4.9 Auto-Tuning 122
4.10 Test Run 128
4.11 Fine Tuning during Test Runs (Adjust the Control Function) 130
4.12 Test Run Checklist 134

4.1 Safety Precautions

⚠DANGER

Electrical Shock Hazard

Do not examine, connect, or disconnect wiring on an energized drive. Before servicing, disconnect all power to the equipment and wait for the time specified on the warning label at a minimum. The internal capacitor stays charged after the drive is de-energized. The charge indicator LED extinguishes when the DC bus voltage decreases below 50 Vdc. When all indicators are OFF, measure for dangerous voltages to make sure that the drive is safe.

If you do work on the drive when it is energized, it will cause serious injury or death from electrical shock. The drive has internal capacitors that stay charged after you de-energize the drive.

⚠WARNING

Electrical Shock Hazard

Do not operate the drive when covers are missing. Replace covers and shields before you operate the drive. Use the drive only as specified by the instructions.

Some figures in this section include drives without covers or safety shields to more clearly show the inside of the drive. If covers or safety shields are missing from the drive, it can cause serous injury or death.

Do not remove covers or touch circuit boards while the drive is energized.

If you touch the internal components of an energized drive, it can cause serious injury or death.

Sudden Movement Hazard

When you use a mechanical holding brake with the drive in a lifting application, you must close the brake if an input terminal triggers the Baseblock command to stop drive output.

If you enter the baseblock command, the motor will suddenly coast and the load will slip, which can cause serious injury or death.

When you use the drive in a lifting application, you must also install external safety circuitry. The drive does not have protection against accidental load drops in lifting applications. Install electrical and/or mechanical safety circuit mechanisms that are isolated from the drive circuitry.

If you do not use external safety circuitry, the drive could drop the load and cause serious injury or death.

4.2 Component Names and Functions

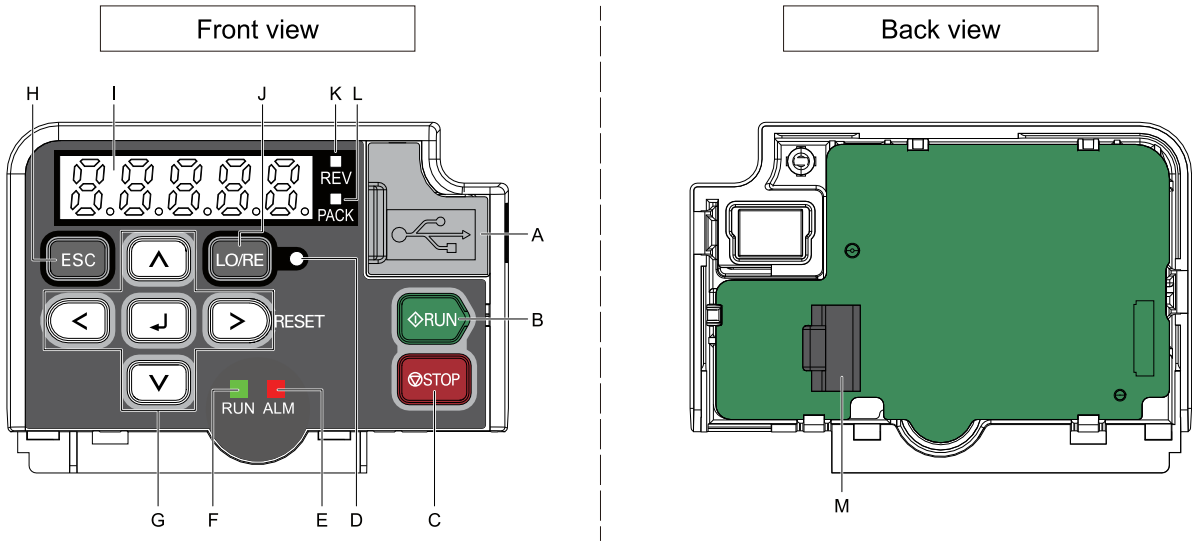

Figure 4.1 Keypad

Table 4.1 Keypad: Names and Functions

Symbol	Name	Function
A	USB Terminal	Insertion point for a USB cable. Uses a USB cable (USB standard 2.0, type A - mini-B) to connect the keypad to a PC.
B	RUN Key	Starts the drive in LOCAL Mode. Starts the operation in Auto-Tuning Mode. **Note:** Before you use the keypad to operate the motor, push on the keypad to set the drive to LOCAL Mode.
C	STOP Key	Stops drive operation. **Note:** Uses a stop-priority circuit. Push to stop the motor. This will also stop the motor when a Run command is active at an external Run command source (REMOTE Mode). To disable priority, set *o2-02 = 0 [STOP Key Selection of Function = Disabled]*.
D	LO/RE LED	Illuminated: The keypad controls the Run command (LOCAL Mode). OFF: The control circuit terminal or serial transmission device controls the Run command (REMOTE Mode). **Note:** • LOCAL: Operated using the keypad. Use the keypad to enter Run/Stop commands and the frequency reference command. • REMOTE: Operated from the control circuit terminal or serial transmission. Use the frequency reference source entered in *b1-01* and the Run command source selected in *b1-02*.
E	ALM/ERR LED	Illuminated: The drive detects a fault. OFF: There are no drive faults or alarms. Flashing: • An alarm • Operation Errors • An Auto-Tuning error **Note:** The LED will illuminate to identify a fault if the drive detects a fault and an alarm at the same time.
F	RUN LED	Illuminated: The drive is in regular operation. OFF: The drive is stopped. Flashing: • The drive is decelerating to stop. • The drive received a Run command, but the frequency reference is 0 Hz. Flashing quickly: • The drive received a Run command from the MFDI terminals and is switching to REMOTE Mode while the drive is in LOCAL Mode. • The drive received a Run command from the MFDI terminals when the drive is not in Drive Mode. • The drive received a Fast Stop command. • The safety function shuts off the drive output. • The user pushed on the keypad while the drive is operating in REMOTE Mode. • The drive is energized with an active Run command and *b1-17 = 1 [RUN@PowerUp Selection = Disregard RUN]*.

Symbol	Name	Function
G	Left Arrow Key	Moves the cursor to the left.
	Up Arrow Key/ Down Arrow Key	• Moves to a different screen. • Selects parameter numbers and increments or decrements setting values.
	Right Arrow Key (RESET)	• Moves the cursor to the right. • Restarts the drive to clear a fault.
	ENTER Key	• Enters parameter values and settings. • Selects each mode, parameter, and set value.
H	ESC Key	• Goes back to the previous screen. • Push and hold to go back to the frequency reference screen (the initial screen).
I	LED Display	Shows parameters, errors, and other data.
J	LO/RE Selection Key	Switches drive control for the Run command and frequency reference between the keypad (LOCAL) and an external source (REMOTE). **Note:** • The LOCAL/REMOTE Selection Key continuously stays enabled after the drive stops in Drive Mode. If the application must not switch from REMOTE to LOCAL because it will have a negative effect on system performance, set *o2-01 = 0 [LO/RE Key Selection of Function = Disabled]* to disable LO/RE. • The drive will not switch between LOCAL and REMOTE when it is receiving a Run command from an external source.
K	REV LED	Illuminated: The drive received a Reverse run command.
L	PACK LED	Illuminated: The drive is In Q2pack operation.
M	RJ-45 Connector	Connects to the drive. Use an RJ-45 8-pin straight through UTP CAT5e extension cable to install the keypad in a different location than the drive.

WARNING! *Sudden Movement Hazard. If you change the control source when b1-07 = 2 [LO/RE Run Selection = Accept RUN], the drive can start suddenly. Before you change the control source, remove all personnel from the area around the drive, motor, and load. Sudden starts can cause serious injury or death.*

◆ LED Flashing Statuses

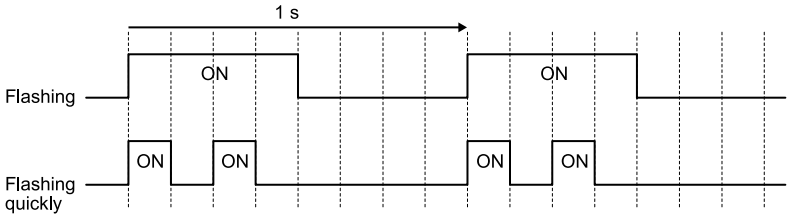

Figure 4.2 About indicator flashing statuses

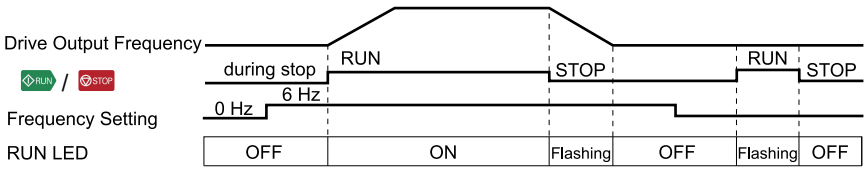

Figure 4.3 Relation between RUN indicator and Drive Operation

◆ Keypad Mode and Menu Displays

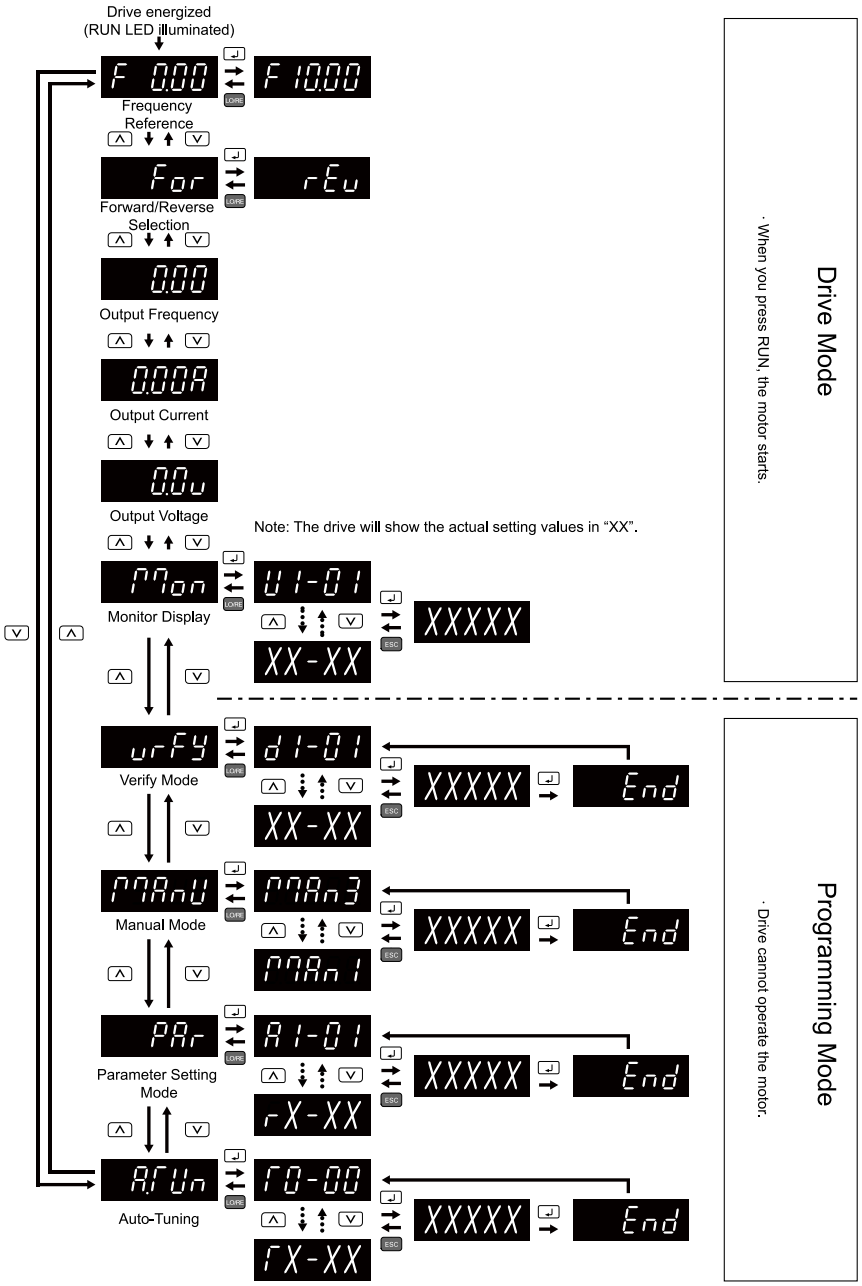

4.3 Set up the Drive with Manual Setup Mode

Drive parameters are in letter groups from A to U. Manual Setup Mode contains only the most frequently used parameters to help you set up the drive more easily.

To access parameters not shown in the Setup Mode, use the PAr menu.

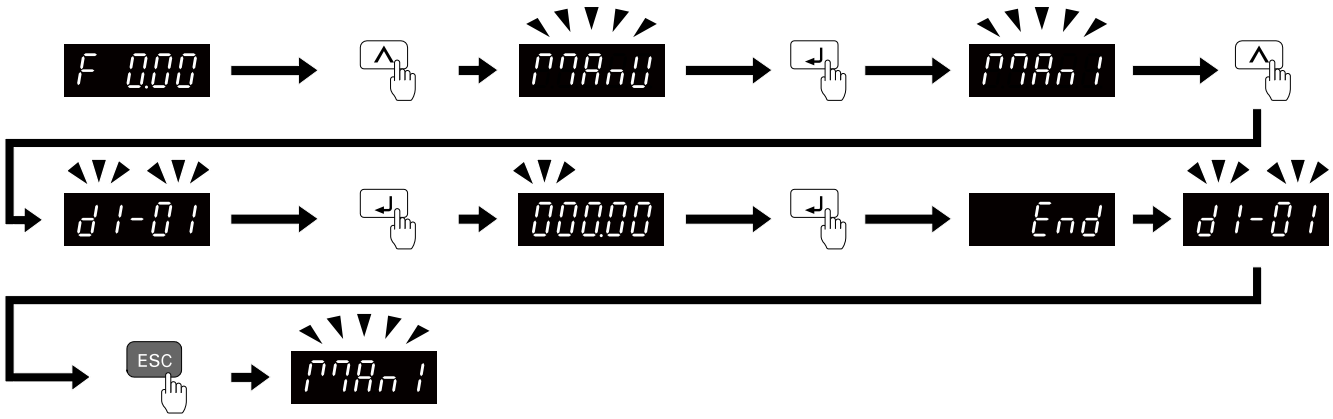

Figure 4.4 Parameters in Manual Setup Mode

Table 4.2 Parameters in Manual Setup Mode

User Parameters	Parameter	Name
A2-01	d1-01	Reference 1
A2-02	C1-01	Accel Time 1
A2-03	C1-02	Decel Time 1
A2-04	U1-01	Frequency Reference
A2-05	U1-02	Output Frequency
A2-06	U1-03	Output Current
A2-07	d1-17	Jog Reference
A2-08	b1-01	Freq. Ref. Sel. 1
A2-09	b1-02	Run Comm. Sel 1
A2-10	b1-03	Stopping Method Selection
A2-11	E2-11	Motor Rated Power (kW)
A2-12	E2-01	Mot Rated Current (FLA)
A2-13	E2-04	Motor Pole Count
A2-14	E1-04	Max Output Frequency
A2-15	—	not used
A2-16	—	not used

User Parameters	Parameter	Name
A2-17	—	not used
A2-18	—	not used
A2-19	U1-16	SFS Output Frequency
A2-20	U1-05	Motor Speed
A2-21	b5-02	Proportional Gain (P)
A2-22	b5-03	Integral Time (I)
A2-23	b5-05	Derivative Time (D)
A2-24	U5-04	PID Setpoint
A2-25	U5-01	PID Feedback
A2-26	b5-01	PID Enable
A2-27	b5-18	b5-19 PID SP Selection
A2-28	b5-06	PID Output Limit
A2-29	b5-70	PID MainRefMode
A2-30	b5-10	PID Output Gain Setting
A2-31	b5-11	PID Output Reverse Selection
A2-32	b5-17	PID Accel/Decel Time

Note:
• When you change *A1-02 [Control Method]*, the settings of some parameters automatically change.

4.4 Drive Mode and Programming Mode

The keypad display of this drive has two modes: Drive Mode and Programming Mode.

- Drive Mode
  Use this mode to operate the drive. These operations are available:
  - Monitor operation statuses (for example, output frequency, output current, and output voltage)
  - Set parameters that you can set while the drive is operating (for example, d1-01 to d1-17). Refer to *Parameter Details on page 431* for more information.
- Programming Mode
  Use this mode to set parameters. These operations are available:
  - Examine and set the parameters that are not at default settings (Verify Mode)
  - See and set all parameters (Parameter Setting Mode)
  - Automatically set motor parameters (Auto-Tuning Mode)

The following tables give information about the functions you can access when you push [∧] / [∨].

Note:

You can use *b1-08 [RUN@PRG Mode Selection]* to set the drive to accept Run commands from an external source while in Programming Mode.

- Set *b1-08 = 1 [NoRUN@Program]* to reject the Run command from an external source while in Programming Mode.
- Set *b1-08 = 2 [RUN@Program]* to accept the Run command from an external source while in Programming Mode.
- Set *b1-08 = 3 [Program@Stop only]* to prevent changes from Drive Mode to Programming Mode.

◆ Drive Mode (Operation of the motor and monitoring of operation status)

Table 4.3 Overview of the Modes

LED Display	Description	Description	Ref.
	Frequency reference display	You can set and monitor frequency references. **Note:** You can change what is shown on the keypad when you energize the drive. Use o1-02 [Monitor Selection at Power-up] to set the items. When *A1-02 = 6 [Control Method = PM AOLVector]*, the display unit is %. 100% = Maximum Output Frequency	-
	Monitor display	The keypad shows *Ux-xx [Monitor]*.	-
	Output voltage display	You can monitor the output voltage reference. Use *o1-01 [User Monitor Selection]* to change the items shown on this display.	313
	Output current display	You can monitor the output current.	-
	Output frequency indicator	You can monitor the frequency output from the drive.	-
	Forward/reverse selection	: Motor rotates in forward direction : Motor rotates in reverse direction **Note:** For applications where the motor must not rotate in reverse direction (for example, for fans and pumps), you can use *b1-04 [Reverse Operation Selection]* to prevent reverse rotation. How to set reverse operation 	-

◆ Programming Mode (Parameter Settings)

Table 4.4 Overview of the Modes

LED Display	Description	Description	Ref.
	Auto-Tuning Mode	The drive automatically calculates and sets the motor parameters.	122 123 124
	Parameter Setting Mode	You can see and set all parameters.	108
	Verify Menu	You can examine and set the parameters that are not at default settings.	109

◆ Drive Mode

These operations are available in Drive Mode:

- Operate and stop the drive
- Show the drive status monitors (for example, frequency reference, output frequency, output current, and output voltage)
- Show the alarm content
- Show the alarm history

Note:

To operate the drive, select Drive Mode. You can switch to other modes when the drive stops, but the drive must be in Drive Mode to start operation.

These steps show how to set the frequency reference source to LOCAL (keypad) and change the frequency reference from 0 Hz to 6 Hz.

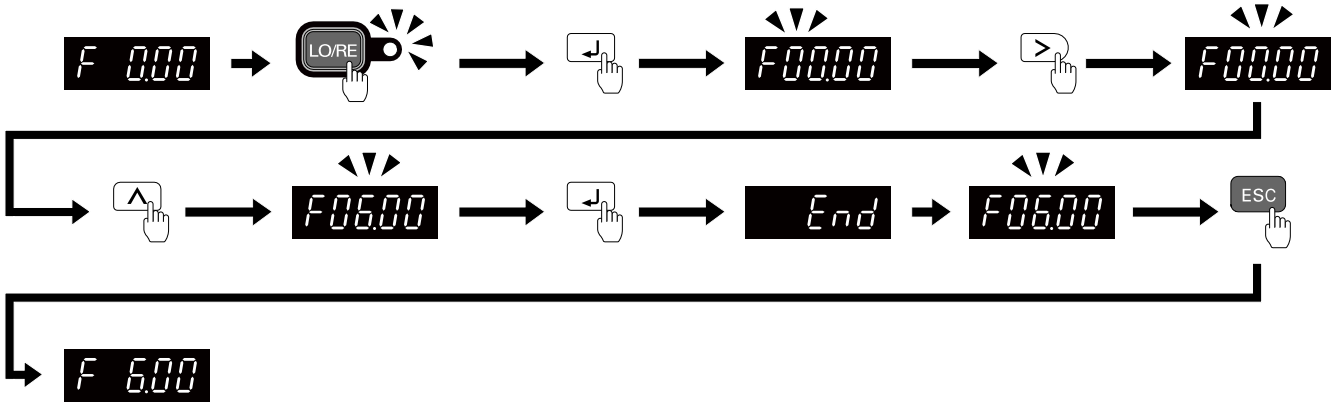

Figure 4.5 Frequency Reference Setting in Drive Mode

Note:

To prevent an incorrect setting, after you enter the frequency reference, you must push the ENTER key to change the frequency reference. Set *o2-05 = 1 [LCD FreqRef Mode@Home Screen = Enabled]* to change the frequency reference value without pushing the ENTER key.

◆ Programming Mode

In Programming Mode, you can set parameters or do Auto-Tuning. This mode has 4 sub-modes for different programming requirements:

- Verify Menu: Use this mode to examine and set the parameters that are not at default settings.
- Setup Mode: Use this mode to see and set the minimum parameters necessary for drive operation. Refer to *Verify and Set the Changed Parameters (Verify Menu) on page 109* for more information.
- Parameter Setting Mode: Use this mode to see and set all parameters.
- Auto-Tuning Mode: Use this mode to automatically set the motor parameters necessary for each control method.

◆ Change Parameter Settings

Show the frequency reference screen in advance.

Note:

Push and hold ESC to go back to the frequency reference screen from any screen.

Use these steps to change *C1-01 [Accel Time 1]* from 1.0 s (default) to 2.0 s.

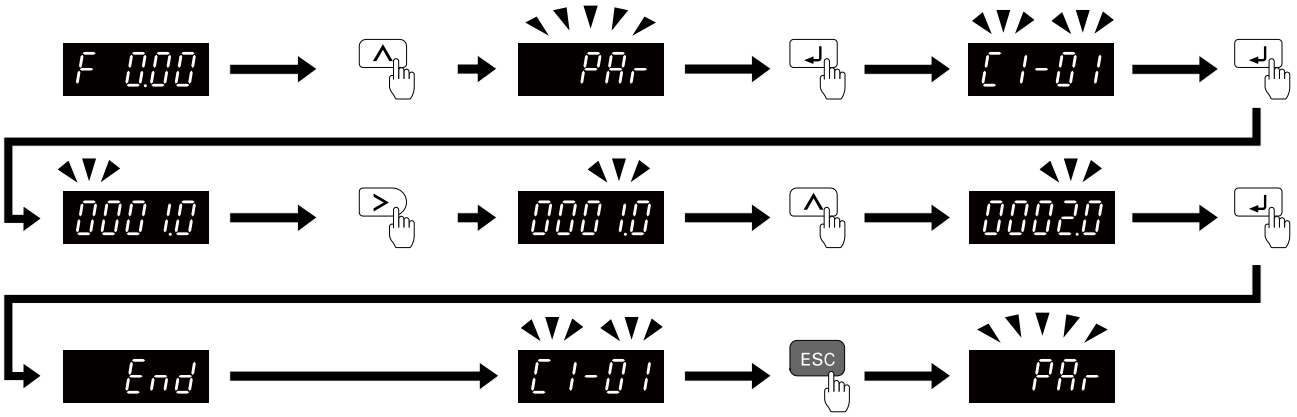

Figure 4.6 Key Operation Examples for Parameter Settings

◆ Verify and Set the Changed Parameters (Verify Menu)

Show the frequency reference screen in advance.

Note:

Push and hold ESC to go back to the frequency reference screen from any screen.

Use Verify mode to view all parameters that are not at default settings. This is very useful when you replace a drive. When there are no changes to parameter settings, the display shows nonE. This lets you quickly access and re-edit changed parameters.

Note:

The drive will only display *A1-02 [Control Method]*, *A1-xx*, *A2-01 to A2-32 [MAN1 Param1 to MAN3 Param12]*, and *E5-01 [PM Mot Code Selection]*.

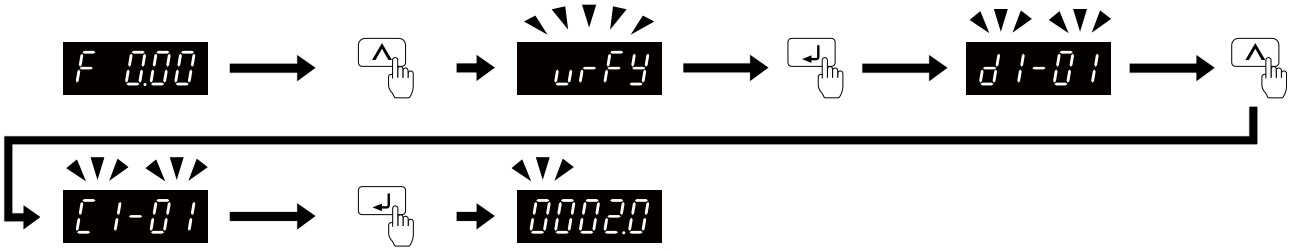

Figure 4.7 Verify and Set the Changed Parameters

◆ How to Switch between LOCAL and REMOTE

LOCAL mode lets you use the keypad to input Run commands. REMOTE mode lets you use other sources than the keypad to input Run commands.

WARNING! *Sudden Movement Hazard. If you change the control source when b1-07 = 2 [LO/RE Run Selection = Accept RUN], the drive can start suddenly. Before you change the control source, remove all personnel from the area around the drive, motor, and load. Sudden starts can cause serious injury or death.*

You can use LO/RE or MFDI functions (LOCAL/REMOTE Selection) to switch between LOCAL and REMOTE.

Note:

1. LO/RE illuminates while the drive is in LOCAL Mode.
2. While you are entering a Run command, you cannot switch between LOCAL and REMOTE.

■ Use the LO/RE Selection Key on the Keypad to Switch between LOCAL and REMOTE

Each time you push

, the mode switches between LOCAL and REMOTE. The LED illuminates in LOCAL Mode.

Figure 4.8 Use the LO/RE Selection Key to Switch between LOCAL and REMOTE

■ Use MFDI Terminals (DI1 to DI7) to Switch between LOCAL and REMOTE

When you set *H1-xx = 11 [MFDI Function Select = LOC/REM Sel.]*, you can activate/deactivate the terminal to switch between LOCAL and REMOTE. Set *H1-xx = 11* to disable the LO/RE key on the keypad.

4.5 Start-up Procedures

This section gives the basic steps necessary to start up the drive.

Use the flowcharts in this section to find the most applicable start-up method for your application.

This section gives information about only the most basic settings.

◆ Flowchart A: Connect and Run the Motor with Minimal Setting Changes

Flowchart A shows a basic start-up sequence to connect and run a motor with a minimum of setting changes. Settings can change when the application changes.

Use the drive default parameter settings for basic applications where high precision is not necessary.

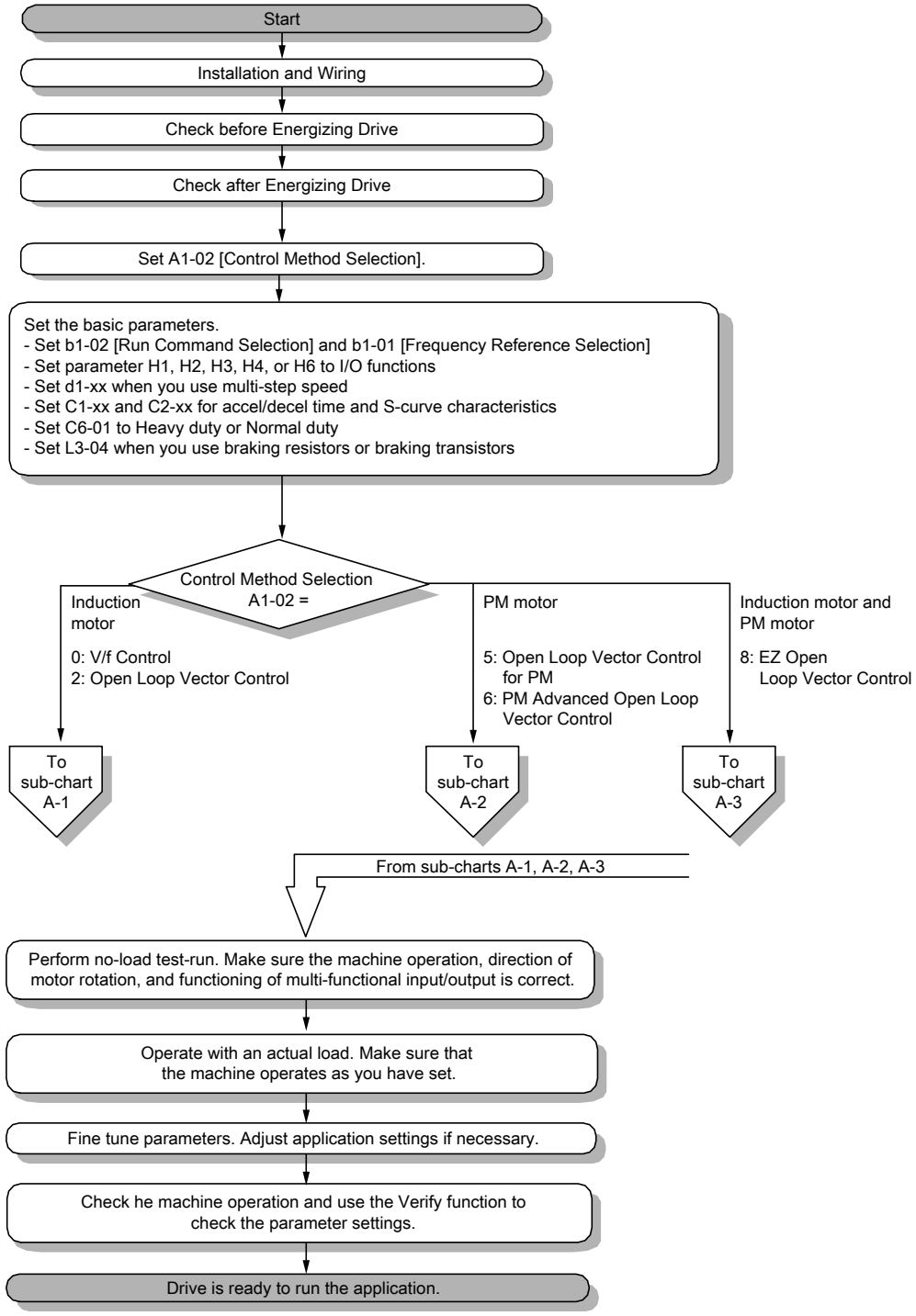

Figure 4.9 Basic Steps before Startup

◆ Sub-Chart A-1: Induction Motor Auto-Tuning and Test Run Procedure

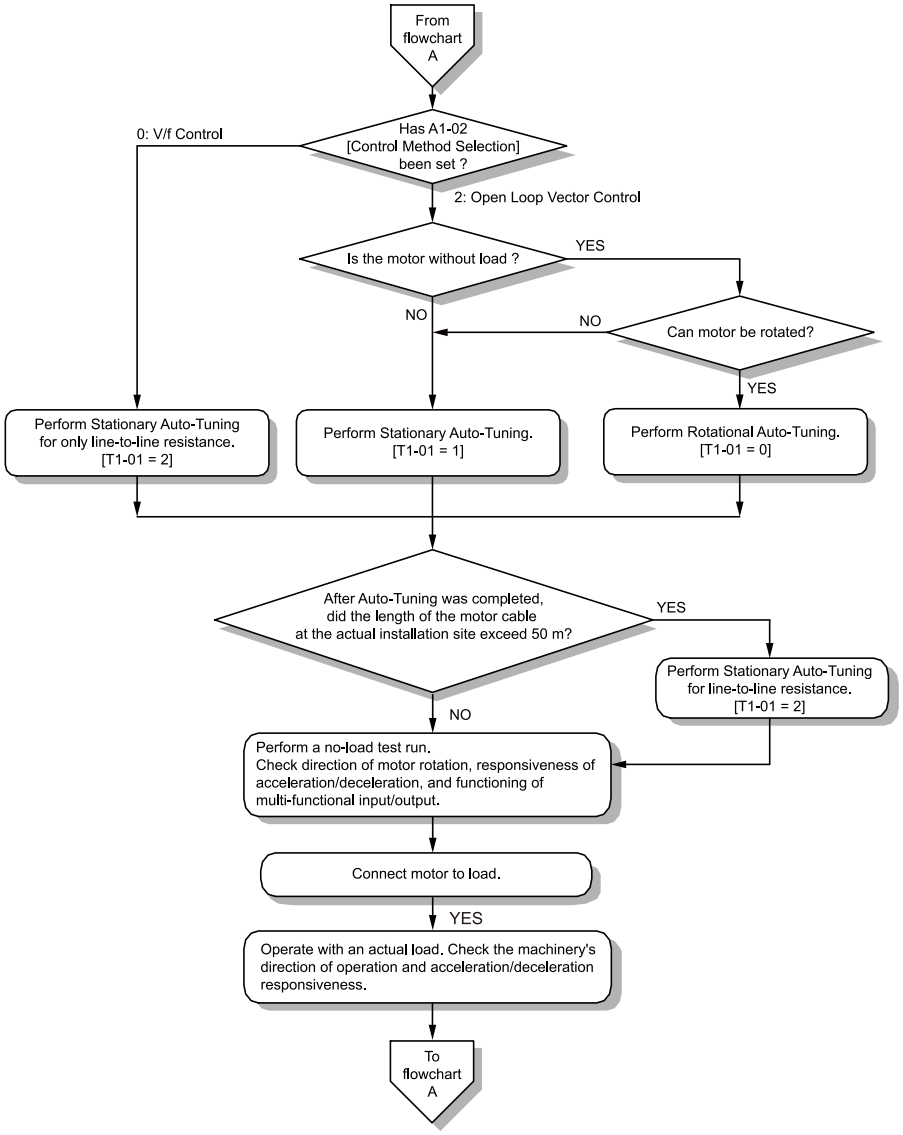

Figure 4.10 Induction Motor Auto-Tuning and Test Run Procedure

◆ Sub-Chart A-2: PM Motor Auto-Tuning and Test Run Procedure

Sub-Chart A-2 gives the basic steps to start up the drive for a PM motor.

WARNING! *Crush Hazard. Test the system to make sure that the drive operates safely after you wire the drive and set parameters. If you do not test the system, it can cause damage to equipment or serious injury or death.*

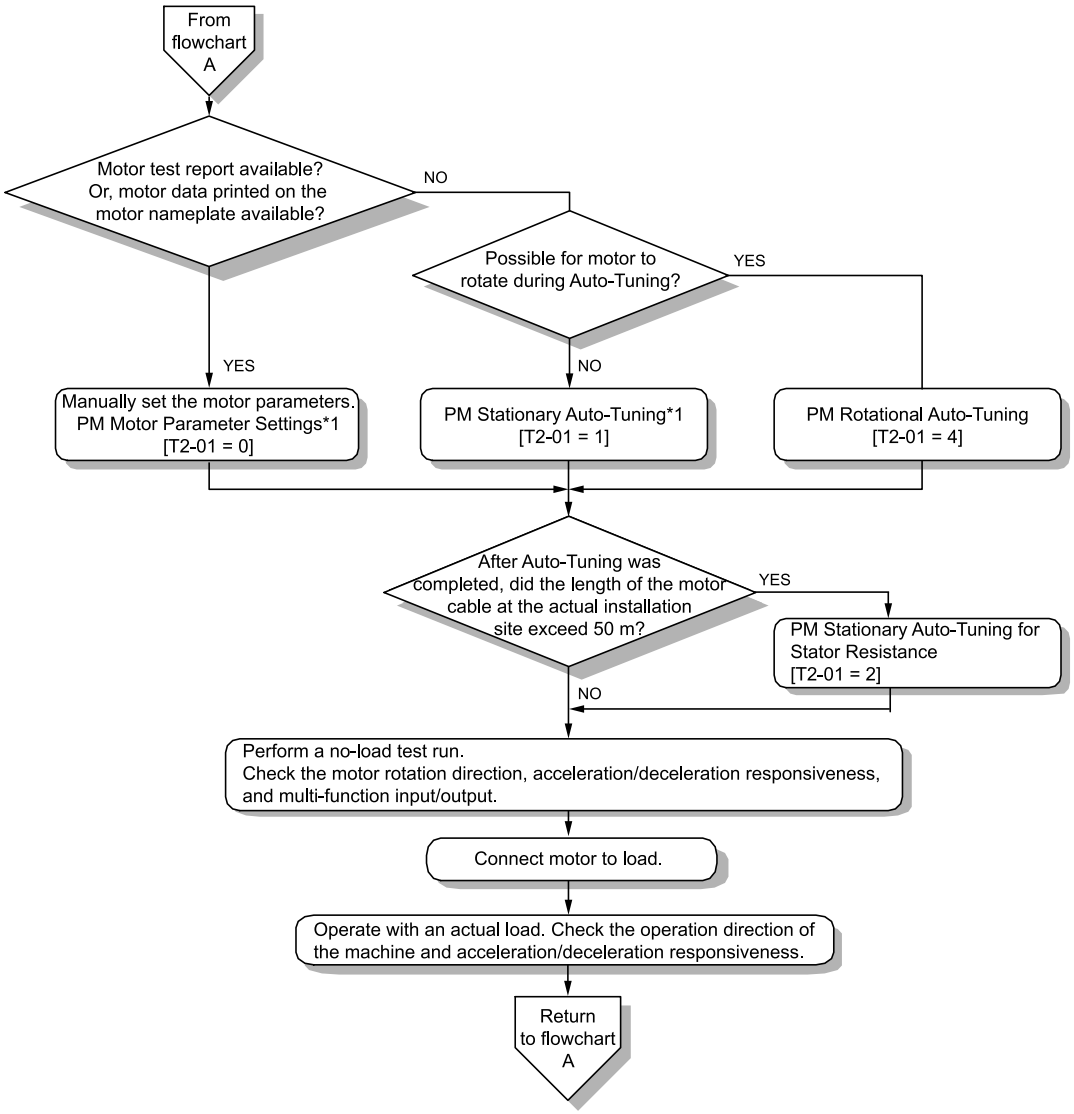

Figure 4.11 PM Motor Auto-Tuning and Test Run Procedure

*1 For Yaskawa PM motors (SMRD, SMRA-series, or SSR1-series), set *E5-01 [PM Mot Code Selection]*. For PM motors from a different manufacturer, set *E5-01 = FFFF*.

◆ Sub-Chart A-3: EZ Open Loop Vector Control Test Run Procedure

Sub-chart A-3 gives the setup procedure to run a PM motor in EZ Open Loop Vector Control.

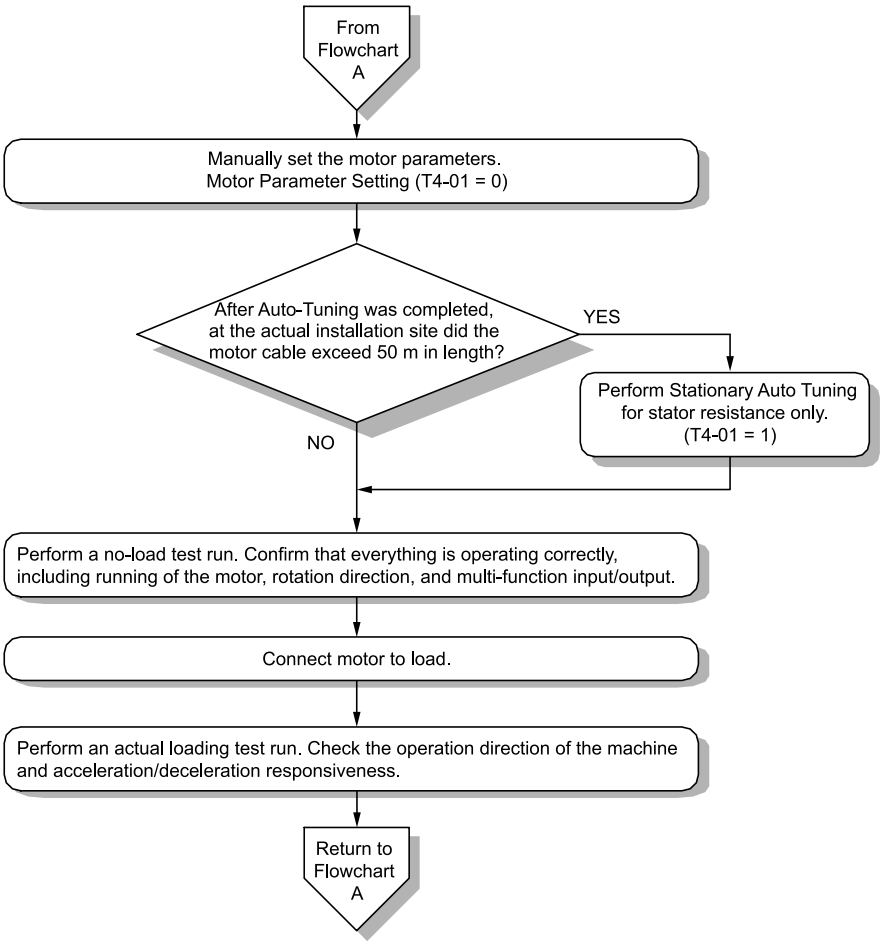

Figure 4.12 Procedure for Test Run of EZ Open Loop Vector Control Method

4.6 Items to Check before Starting Up the Drive

◆ Check before You Energize the Drive

Check the following items before you energize the drive.

Table 4.5 Items to Check before You Energize the Drive

Items to Check	Description
Input Power Supply Voltage	The voltage of the input power supply must be: Three-phase 200 V class: three-phase 200 Vac to 240 Vac 50/60 Hz, 270 Vdc to 340 Vdc Single-phase 200 V class: single-phase 200 Vac to 240 Vac 50/60 Hz, 270 Vdc to 340 Vdc Three-phase 400 V class: three-phase 380 Vac to 480 Vac 50/60 Hz, 513 Vdc to 679 Vdc
	Correctly wire power supply input terminals R/L1, S/L2, and T/L3, or L and N.
	Correctly ground the drive and motor.
Connection between Drive Output Terminals and Motor Terminals	Make sure that you connected drive output terminals U/T1, V/T2, and W/T3 in the correct sequence to align with motor terminals U, V, and W and tighten the screws to a correct tightening torque.
Control Circuit Terminal Wiring	Make sure that you connected the drive control circuit terminals in the correct sequence to align with devices and switches and tighten the screws to a correct tightening torque.
Control Circuit Terminal Status	Turn OFF the inputs from all devices and switches connected to the drive control circuit terminals.
Connection between Machinery and Motor	Disengage all couplings and belts that connect the motor and machinery.

◆ Check after You Energize the Drive

Check the following items after you energize the drive. The keypad display is different depending on drive status.

Table 4.6 Display Status after You Energize the Drive

Status	Display	Description
During Usual Operation		The LED display shows the frequency reference.
When the Drive Detects a Fault		The display is different for different faults. Refer to “213” to remove the cause of the fault. The ALM LED will illuminate/blink.

4.7 Keypad Operation

◆ Digital Character Mapping Table

The LED keypad shows the digital characters as follows.

Characters	LED Display	Characters	LED Display	Characters	LED Display	Characters	LED Display
0	0	9	9	I	ı	R	r
1	1	A	A	J	J	S	5
2	2	B	b	K	t	T	T
3	3	C	C	L	L	U	U
4	4	D	d	M	M *1	V	u
5	5	E	E	N	n	W	W *1
6	6	F	F	O	o	X	No indication
7	7	G	G	P	P	Y	y
8	8	H	H	Q	q	Z	No indication

*1 Shown across two digits.

◆ Show the Monitor

Show the frequency reference screen in advance.

Note:

Push and hold ESC to go back to the frequency reference screen from any screen.

Use these steps to monitor parameter settings.

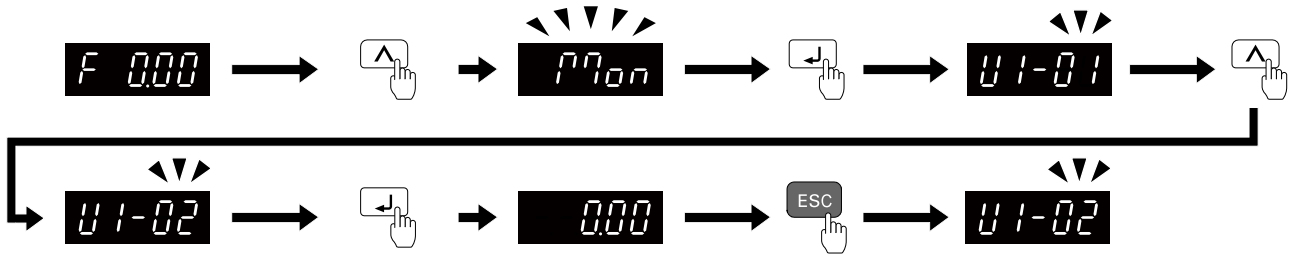

Figure 4.13 How to Monitor the Parameter Setting Values

◆ Check Modified Parameters

Show the frequency reference screen in advance.

Note:

Push and hold ESC to go back to the frequency reference screen from any screen.

Use Verify mode to view all parameters that are not at default settings. This is very useful when you replace a drive. This lets you quickly access and re-edit changed parameters.

Note:

The drive will only display *A1-02 [Control Method]*, *A1-xx*, *A2-01 to A2-32 [MAN1 Param1 to MAN3 Param12]*, and *E5-01 [PM Mot Code Selection]*.

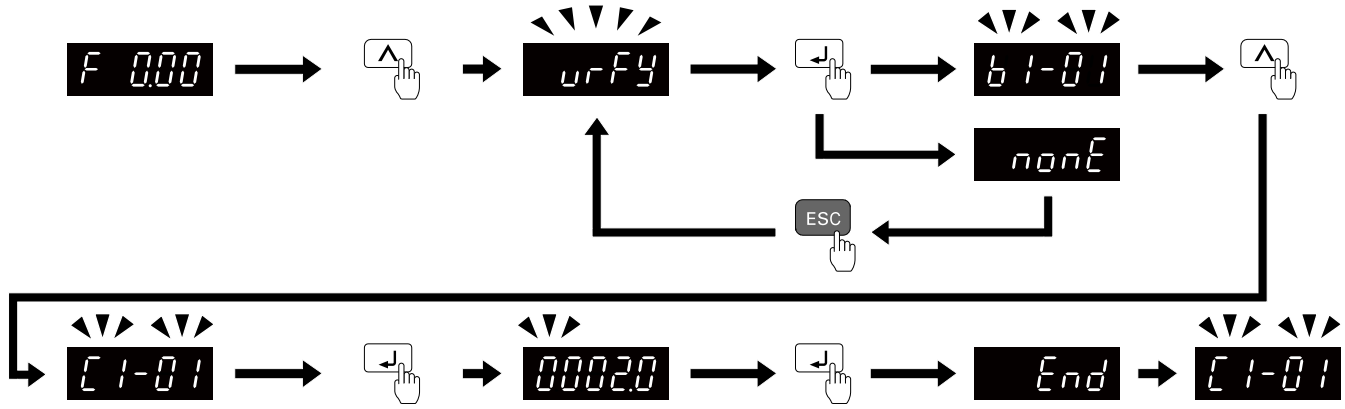

Figure 4.14 How to Examine the Changed Parameters

◆ Set and View Necessary Parameters

Show the frequency reference screen.

Note:

Press and hold ESC to return to frequency reference screen from any screen.

The Manual Setup mode shows the parameters and monitors set in *A2-01 to A2-32 [MAN1 Param1 to MAN3 Param12]*. This lets you quickly access and view and change these parameters and monitors.

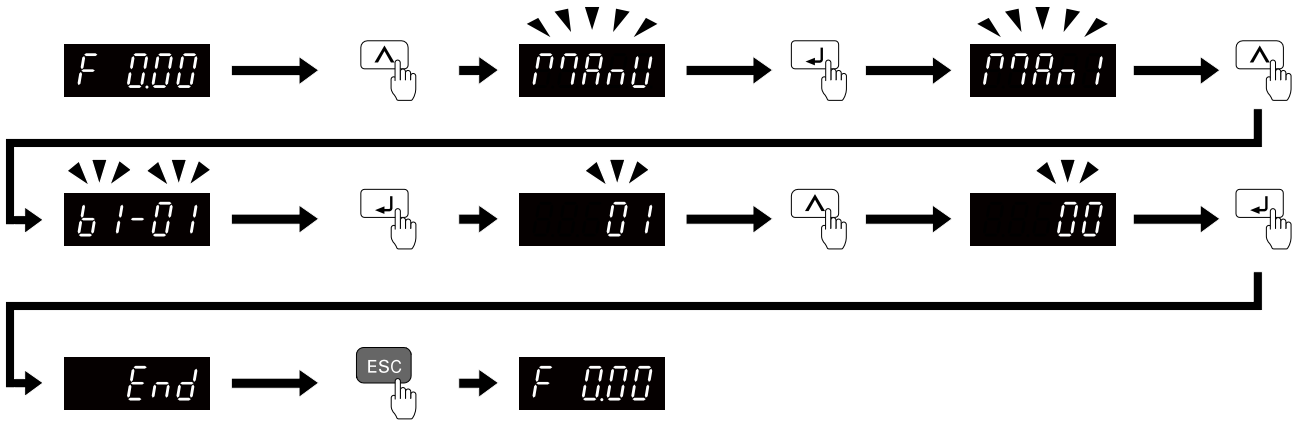

Figure 4.15 View and Set the Necessary Parameters

Continue to change the parameters or press and hold ESC to go back to the frequency reference screen.

◆ Change Parameter Settings

Show the frequency reference screen in advance.

Note:

Push and hold ESC to go back to the frequency reference screen from any screen.

This example shows how to change *C1-01 [Accel Time 1]*. Set the parameter to the necessary value.

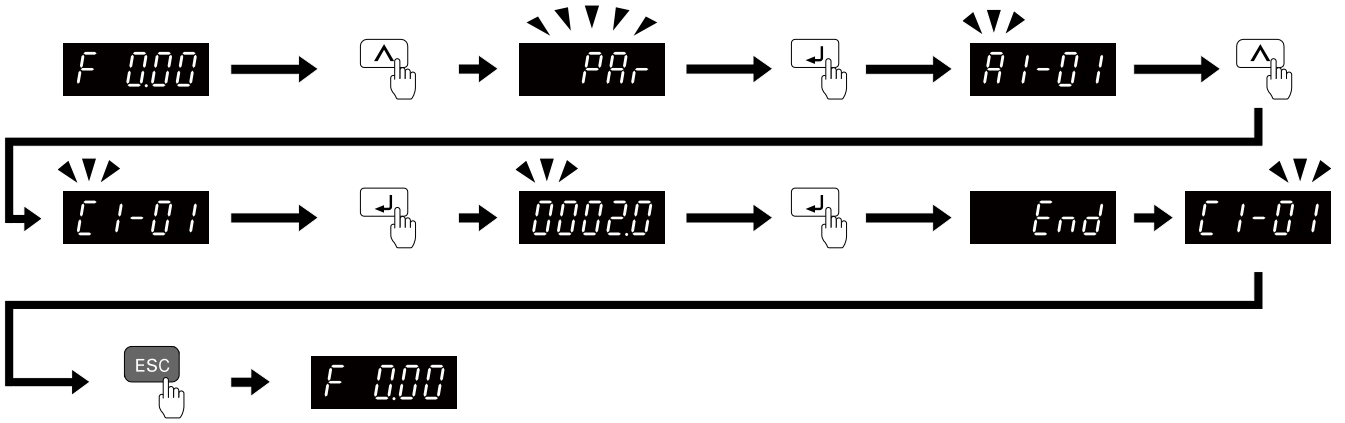

Figure 4.16 How to Change the Parameter Setting

Continue to change parameters or push and hold ESC to go back to the frequency reference screen.

◆ Save a Backup of Parameters

Show the frequency reference screen in advance.

Note:

Push and hold ESC to go back to the frequency reference screen from any screen.

Use these steps to save a backup of the drive parameters to the keypad.

Making backups of the parameter settings can save time when setting parameters after replacing a drive. If you set up more than one drive, you can copy the parameter settings from a drive that completed a test run to the other drives.

Note:

- Make sure that you stop the motor before you back up parameters.
- The drive does not accept Run commands while it is making a backup.
- Set *o3-02 = 0 [COPY Allow Selection = Disabled]* to protect the parameters saved in the keypad.

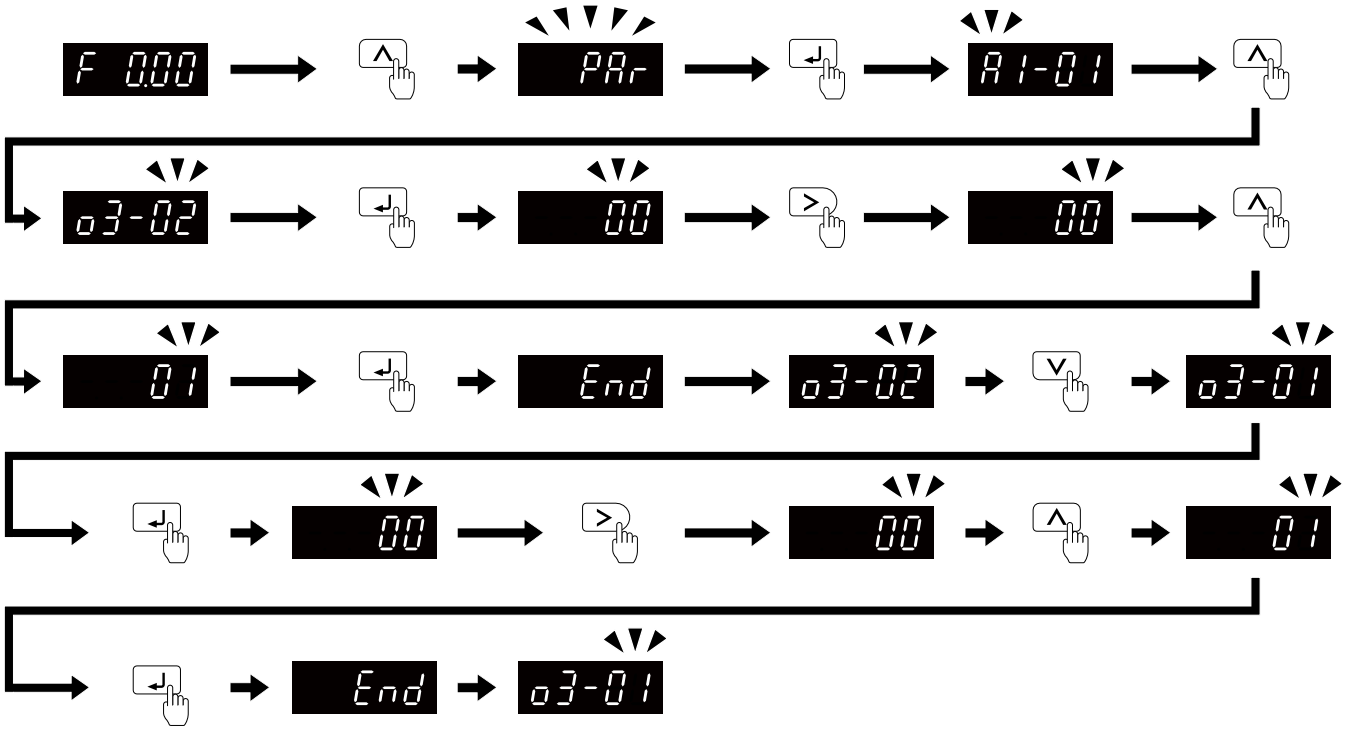

Figure 4.17 How to Save Backed-up Parameters

Push and hold ESC to go back to the frequency reference screen.

◆ Write Backed-up Parameters to the Drive

Show the frequency reference screen in advance.

Note:

Push and hold ESC to go back to the frequency reference screen from any screen.

Use these steps to write the parameters backed up in the keypad into a different drive.

Note:
- Make sure that you stop the drive before you restore the backed-up parameters.
- The drive does not accept Run commands while it is restoring parameters.

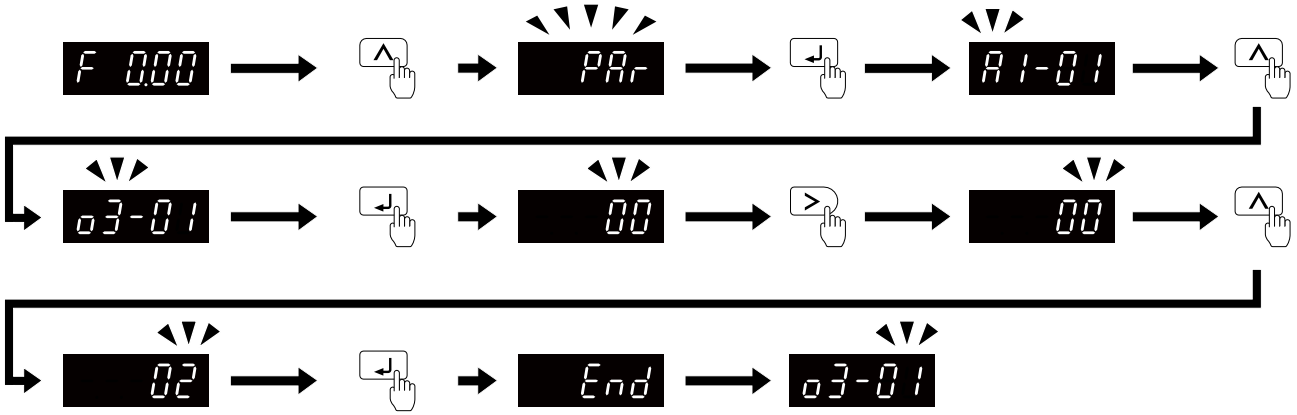

Figure 4.18 Writing backed up parameters

Push and hold ESC to go back to the frequency reference screen.

◆ Verify Keypad Parameters and Drive Parameters

Show the frequency reference screen in advance.

Note:

Push and hold ESC to go back to the frequency reference screen from any screen.

This procedure verifies that the parameter setting values that were backed up in the keypad agree with the parameter setting values in the drive.

Note:
- Make sure that you stop the drive before you examine parameters.
- The drive does not accept Run commands while it is restoring parameters.

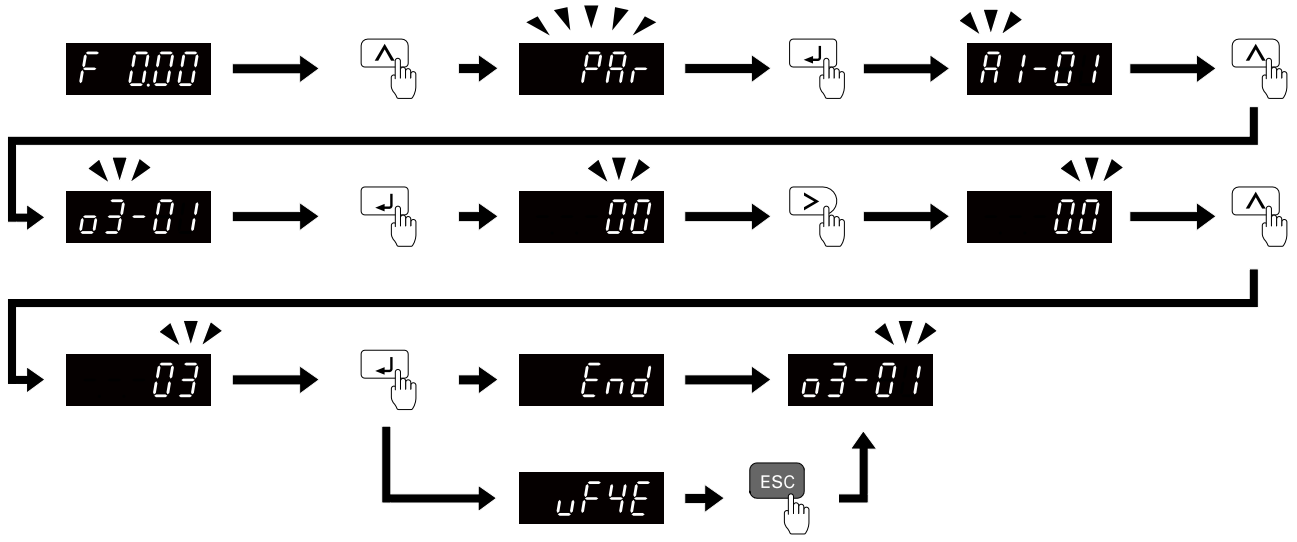

Figure 4.19 Verify Keypad Parameters and Drive Parameters

Push and hold ESC to go back to the frequency reference screen.

◆ Delete Parameters Backed Up to the Keypad

Show the frequency reference screen in advance.

Note:

Push and hold ESC to go back to the frequency reference screen from any screen.

Use these steps to erase the parameters backed up in the keypad.

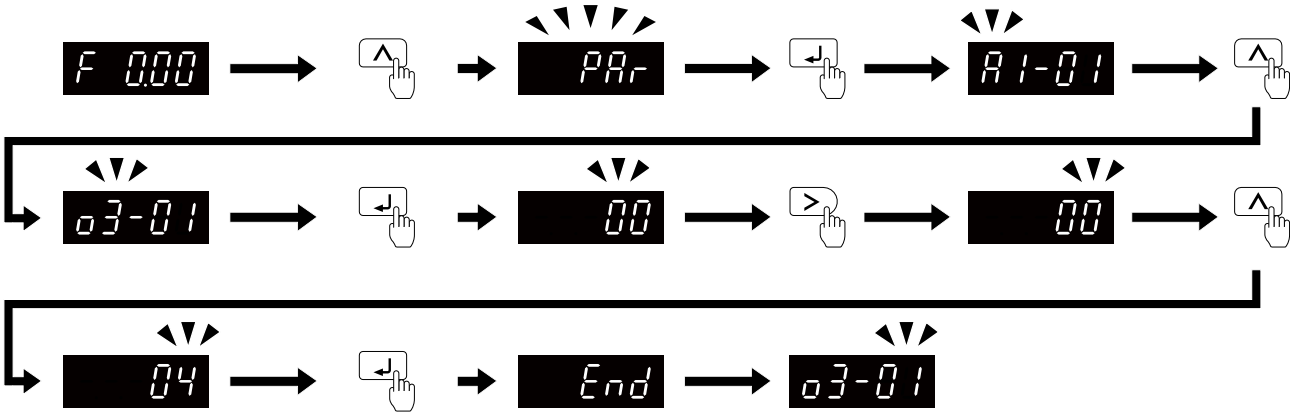

Figure 4.20 How to Erase the Backed-up Parameters

Push and hold ESC to go back to the frequency reference screen.

4.8 Automatic Parameter Settings Optimized for Specific Applications (Application Presets)

Show the frequency reference screen.

Note:

Press and hold a ESC to return to frequency reference screen from any screen.

Use this procedure to set an application preset.

The drive has application presets to set the necessary parameters for different applications to their best values. Use urFY to find parameters that were changed automatically by the application preset function in *A1-06*.

Note:

Before you set *A1-06*, make sure that you set *A1-03 = 2220, 3330 [Init Parameters = 2-Wire Initialization, 3-Wire Initialization]* to initialize parameters.

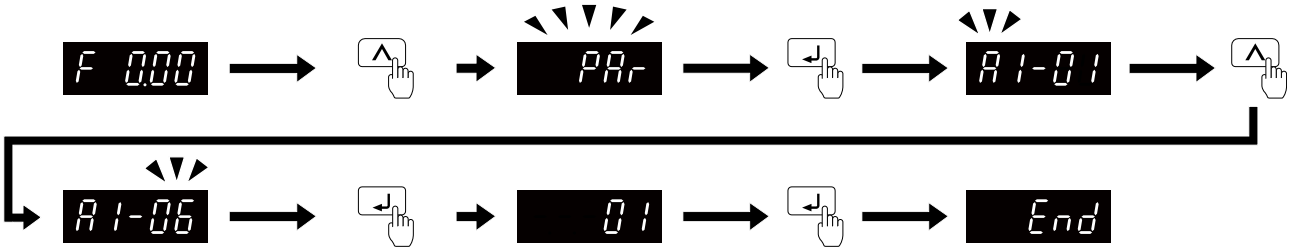

Figure 4.21 Automatic Parameter Settings

Press and hold ESC to go back to the frequency reference screen.

Note:

- Make sure that you do Auto-Tuning after you set *A1-06* for a hoist application.
- It is not possible to change the *A1-06* value. To set an application preset, first set *A1-03 = 2220* to initialize parameters, then set this parameter. If initializing all parameters will cause a problem, do not change the settings.
- When the drive changes to the *A1-06* setting, it will also reset the parameters automatically registered to *A2-17 to A2-32 [MAN2 Param7 to MAN3 Param12]* when *A2-33 = 1 [Manual Autoset Parameters = Auto Save]*.

4.9 Auto-Tuning

Auto-Tuning uses motor characteristics to automatically set drive parameters for vector control. Think about the type of motor, drive control method, and the motor installation environment and select the best Auto-Tuning method.

WARNING! *Crush Hazard. Rotational Auto-Tuning rotates the motor at 50% or more of the motor rated frequency. Make sure that there are no issues related to safety in the area around the drive and motor. Increased motor frequency can cause serious injury or death.*

◆ Auto-Tuning for Induction Motors

This section gives information about Auto-Tuning for induction motors. Set motor parameters *E1-xx and E2-xx* (or, for motor 2, *E3-xx and E4-xx*) for Auto-Tuning.

Note:

Do Stationary Auto-Tuning if you cannot do Rotational Auto-Tuning. There can be large differences between the measured results and the motor characteristics when Auto-Tuning is complete. Examine the parameters for the measured motor characteristics after you do Stationary Auto-Tuning.

Table 4.7 Auto-Tuning Mode Selection

Method	Parameter Settings	Application Conditions and Benefits	Applicable Control Method (A1-02 Setting)	
			V/f Control (0)	OLVector (2)
Rotational Auto-Tuning	T1-01 = 0	• When you can decouple the motor and load the motor can rotate freely while Auto-Tuning. • When operating motors that have fixed output characteristics. • When it is necessary to use motors that have high-precision control. • When you cannot decouple the motor and load, but the motor load is less than 30%.	x	x
Stationary Auto-Tuning 1	T1-01 = 1	• When you cannot decouple the motor and load. • When the motor load is more than 30%. • When the information from the motor test report or motor nameplate is not available. With Stationary Auto-Tuning, the energized drive stays stopped for approximately 1 minute. During this time, the drive automatically measures the necessary motor parameters. • When operating the motor with a less than 30% light load after Auto-Tuning. Set *T1-12 = 1 [Test Mode Selection = Yes]* to do a test run after Auto-Tuning.	-	x
Stationary Line-Line Resistance	T1-01 = 2	• After Auto-Tuning, the wiring distance between the drive and motor changed by 50 m or more. • When the wiring distance is 50 m or more in the V/f Control mode. • When the motor output and drive capacity are different.	x	x

■ Input Data for Induction Motor Auto-Tuning

To do Auto-Tuning, input data for the items that have an "x" in the table below. Before starting Auto-Tuning, prepare the motor test report or record the information on the motor nameplate as a reference.

Table 4.8 Input Data for Induction Motor Auto-Tuning

Input Data	Parameter	Unit	Auto-Tuning Mode (T1-01 Setting)		
			Rotational Auto-Tuning (0)	Stationary Auto-Tuning 1 (1)	Stationary Line-Line Resistance (2)
Motor Rated Power	T1-02	kW	x	x	x
Motor Rated Voltage	T1-03	V	x	x	-
Motor Rated Current	T1-04	A	x	x	x
Motor Base Frequency	T1-05	Hz	x	x	-
Motor Poles Number	T1-06	-	x	x	-
Motor Base Speed	T1-07	min^{-1}	x	x	-
Motor NoLoad Current	T1-09	A	-	x	-
Motor Rated Slip Frequency	T1-10	Hz	-	x *1	-
Motor Iron Loss	T1-11	W	x *2	-	-

Input Data	Parameter	Unit	Auto-Tuning Mode (T1-01 Setting)		
			Rotational Auto-Tuning (0)	Stationary Auto-Tuning 1 (1)	Stationary Line-Line Resistance (2)
Test Mode Selection *3	T1-12	-	-	x *4	-
No-load Voltage	T1-13	V	x	x	-

*1 Shows 0 Hz as the default value. If you do not know the Motor Rated Slip Frequency, keep the setting at 0 Hz.
*2 Input this value when *A1-02 = 0 [Control Method = V/f Control]*.
*3 If *T1-12 = 1 [Test Mode Selection = Yes]*, when you run the motor in Drive Mode for the first time after Auto-Tuning, the drive will automatically set *E2-02 [Mot Rated Slip]* and *E2-03 [Mot No-Load Current]*.
*4 Input this value when *T1-10 [Motor Rated Slip Frequency] = 0 Hz*.

◆ Auto-Tuning for PM Motors

This section gives information about Auto-Tuning for PM motors. Auto-Tuning sets motor parameters *E1-xx and E5-xx*.

Table 4.9 Auto-Tuning for PM Motors

Mode	Parameter Settings	Application Conditions and Benefits	Applicable Control Method (A1-02 Setting)	
			PM OLVector (5)	PM AOLVector (6)
Manual Entry w/ Motor Data Sheet	T2-01 = 0	• When the information from the motor test report or motor nameplate is available. • Rotational/Stationary Auto-Tuning that energizes the motor is not done. Manually input the necessary motor parameters.	x	x
PM Stationary Auto-Tuning	T2-01 = 1	• When the information from the motor test report or motor nameplate is not available. **Note:** With Stationary Auto-Tuning, the energized drive stays stopped for approximately 1 minute. During this time, the drive automatically measures the necessary motor parameters.	x	x
PM Stationary Auto-Tuning for Stator Resistance	T2-01 = 2	• After Auto-Tuning, the wiring distance between the drive and motor changed by 50 m (164 ft) or more. • When the motor output and drive capacity are different.	x	x
PM Motor Code Selection	T2-01 = 4	• When the information from the motor test report or motor nameplate is not available. • When you can decouple the motor and load and the motor can rotate freely while Auto-Tuning. • The drive will automatically set the values measured during Auto-Tuning to the motor parameters.	x	x
High Frequency Injection	T2-01 = 5	• Automatically sets the control parameters that are necessary to set *n8-35 = 2 [InitRotorPos Selection =]* or *n8-57 = 1 [High-Freq Injection = Enabled]*. • Applicable to IPM motors only. • Do Auto-Tuning with the motor connected to the drive. **Note:** When you set *n8-35 = 1* or *n8-57 = 1*, do High Frequency Injection Auto-Tuning. Set the data on the motor nameplate to the drive before you do High Frequency Injection Auto-Tuning. In High Frequency Injection Auto-Tuning, the drive energizes the stopped motor and automatically adjusts the parameters.	x	x

■ Input Data for PM Motor Auto-Tuning

To do Auto-Tuning, input data for these items that have an "x". Before starting Auto-Tuning, prepare the motor test report or record the information on the motor nameplate as a reference.

Table 4.10 Input Data for PM Motor Auto-Tuning

Input Data	Parameter	Unit	Auto-Tuning Mode (T2-01 Setting)					
			PM Motor Parameter Settings (0)			PM Static Full AutoTune (1)		PM Static R Autotune (2)
Control Method Selection	**A1-02**	**-**	**5, 6**	**5**	**6**	**5**	**6**	**5, 6**
PM Motor Code Selection	**T2-02**	**-**	**Motor code of Yaskawa motor *1**	**FFFF *2**	**FFFF *2**	**-**	**-**	**-**
PM Motor Type	T2-03	-	-	-	-	x	x	-
PM Motor Rated Power	T2-04	kW	-	x	x	x	x	-
PM Motor Rated Voltage	T2-05	V	-	x	x	x	x	-
PM Motor Rated Current	T2-06	A	-	x	x	x	x	x

Input Data	Parameter	Unit	Auto-Tuning Mode (T2-01 Setting)					
			PM Motor Parameter Settings (0)			PM Static Full AutoTune (1)		PM Static R Autotune (2)
Control Method Selection	**A1-02**	**-**	**5, 6**	**5**	**6**	**5**	**6**	**5, 6**
PM Motor Code Selection	**T2-02**	**-**	**Motor code of Yaskawa motor *1**	**FFFF *2**	**FFFF *2**	**-**	**-**	**-**
PM Motor Base Frequency	T2-07	Hz	-	x	-	x	-	-
Number of PM Motor Poles	T2-08	-	-	x	x	x	x	-
PM Motor Base Speed	T2-09	min^{-1}	-	-	x	-	x	-
PM Motor Stator Resistance	T2-10	Ω	x	x	x	-	-	-
PM Motor d-Axis Inductance	T2-11	mH	x	x	x	-	-	-
PM Motor q-Axis Inductance	T2-12	mH	x	x	x	-	-	-
Back-EMF Units Selection	T2-13	-	x	x	x	-	-	-
Back-EMF Voltage Constant (Ke)	T2-14	*3	x	x	x	-	-	-
Pull-In Current Level	T2-15	%	-	-	-	x	x	-

*1 Set the motor code for a Yaskawa PM motor.
*2 Set the motor code to FFFF for a PM motor from a different manufacturer.
*3 Changes when the value set in *T2-13* changes.

Table 4.11 Input Data for PM Motor Auto-Tuning

Input Data	Parameter	Unit	Auto-Tuning Mode (T2-01 Setting)		
			PM Rotary Autotune (4)		High Frequency Injection (5)
Control Method Selection	**A1-02**	**-**	**5**	**6**	**5, 6**
PM Motor Code Selection	**T2-02**	**-**	**-**	**-**	**-**
PM Motor Type	T2-03	-	x	x	-
PM Motor Rated Power	T2-04	kW	x	x	-
PM Motor Rated Voltage	T2-05	V	x	x	-
PM Motor Rated Current	T2-06	A	x	x	-
PM Motor Base Frequency	T2-07	Hz	x	-	-
Number of PM Motor Poles	T2-08	-	x	x	-
PM Motor Base Speed	T2-09	min^{-1}	-	x	-
Pull-In Current Level	T2-15	%	x	x	-

◆ Auto-Tuning in EZ Open Loop Vector Control Method

This section gives information about the Auto-Tuning mode for EZ Open Loop Vector Control. Auto-Tuning will set the *E9-xx* parameters.

Table 4.12 EZ Tuning Mode Selection

Mode	Parameter Settings	Application Conditions and Benefits	Applicable Control Method (A1-02 Setting)
Motor Parameter Setting	T4-01 = 0	• Applicable when driving an induction motor or a PM motor • Suitable for derating torque applications, for example fans and pumps.	EZ Vector (8)
Line-to-Line Resistance	T4-01 = 1	• After Auto-Tuning, the wiring distance between the drive and motor changed by 50 m or more. • When the motor output and drive capacity are different.	EZ Vector (8)

■ Auto-Tuning Input Data in EZ Open Loop Vector Control Method

To do Auto-Tuning, input data for the items that have an "x". Before starting Auto-Tuning, prepare the motor test report or record the information on the motor nameplate as a reference.

Table 4.13 Auto-Tuning Input Data in EZ Open Loop Vector Control Method

Input Data	Parameter	Unit	Auto-Tuning Mode (T4-01 Setting)	
			Motor Constant (0)	Static R Autotune (1)
Motor Type Selection	T4-02	-	x	-
Motor Max Revolutions	T4-03	min^{-1}	x	-
Motor Rated Revolutions	T4-04	min^{-1}	x	-
Motor Rated Frequency	T4-05	Hz	x	-
Motor Rated Voltage	T4-06	V	x	-
PM Motor Rated Current (FLA)	T4-07	A	x	x
PM Motor Rated Power (kW)	T4-08	kW	x	-
Number of Motor Poles	T4-09	-	x	-

◆ ASR and Inertia Tuning

To increase drive responsiveness and prevent hunting, use Auto-Tuning to automatically adjust the control-related parameters. These types of Auto-Tuning are available for the control system:

- Deceleration Rate Tuning
- KEB Tuning

Note:

If you do Control Tuning, you cannot set *H1-xx = 61 [Motor 2 Select]*. Do not do Control Tuning for applications that switch between motor 1 and motor 2.

Table 4.14 Control Loop Tuning Selection

Mode	Parameter Settings	Application Conditions and Benefits	Applicable Control Methods (A1-02 Settings)				
			V/f Control (0)	OLVector (2)	PM OLVector (5)	PM AOLVector (6)	EZ Vector (8)
Deceleration Rate Tuning	T3-00 = 2	To automatically adjust the deceleration rate to prevent an *ov [Overvoltage]* fault.	x	x	x	x	x
KEB Tuning	T3-00 = 3	• To automatically adjust parameter settings to prevent an *ov [Overvoltage]* fault with the KEB Ride-Thru function. • When *L3-11 = 1 [Overvolt Supression Select = Enabled]*.	x	x	x	x	x

■ Deceleration Rate Tuning

Deceleration Rate Tuning automatically sets the deceleration rate to prevent an *ov [Overvoltage]* fault during motor deceleration. Set *C1-11 [Accel/Decel Time Switchover Freq]* first to automatically set parameters *C1-02 [Decel Time 1]* (high speed range) and *C1-08 [Decel Time 4]* (low speed range).

■ KEB Tuning

KEB Tuning automatically sets parameters used for the KEB Ride-Thru function and for the overvoltage suppression function.

Control Tuning automatically sets these parameters in to the best values.

Table 4.15 Parameters set in Control Tuning

Parameters Automatically Set	Deceleration Rate Tuning	KEB Tuning
C1-02 [Decel Time 1]	x	-
C1-08 [Decel Time 4]	x *1	-
C1-09 [Fast Stop Time]	-	x *2
L2-06 [KEB Decel Time]	-	x *3
L3-25 [Load Inertia Ratio]	-	x

*1 The drive automatically sets *C1-08 [Decel Time 4]* only when *C1-11 [Ac/Dec Switch Frequency] ≠ 0*.

*2 When *L2-29 = 1 [KEB Method = Single KEB1 Ride-Thru]*, the drive will automatically adjust *C1-09 [Fast Stop Time]* and will not adjust *L2-06 [KEB Decel Time]*. If you must not change the Fast Stop time, do not do KEB Tuning.

*3 When *L2-29 = 2, 3, or 4 [KEB Method = Single KEB2 Ride-Thru, System KEB1 Ride-Thru, or System KEB2 Ride-Thru]*, the drive will automatically adjust *L2-06 [KEB Decel Time]*.

◆ Precautions before Auto-Tuning

Examine the topics in this section before you start Auto-Tuning.

■ Prepare for Basic Auto-Tuning

- You must input data from the motor nameplate or motor test report to do Auto-Tuning. Make sure that this data is available before you do Auto-Tuning.
- For best performance, make sure that the drive input supply voltage is equal to or more than the motor rated voltage.

Note:

Better performance is possible when you use a motor with a rated voltage that is less than the input supply voltage (by 20 V for 200 V class models or by 40 V for 400 V class models). This is very important when you operate the motor at more than 90% of base speed, where high torque precision is necessary. If the input power supply is equal to the motor rated voltage, the drive output voltage will not be sufficient and performance will decrease.

- Push STOP on the keypad to cancel Auto-Tuning.
- If a Safe Disable input signal is input to the drive during Auto-Tuning, Auto-Tuning measurements will not complete successfully. If this occurs, cancel the Auto-Tuning, then do it again.

Table 4.16 Status of Input/Output Terminals during Auto-Tuning

Auto-Tuning Type	Mode		Parameter	Multi-Function Input	Multi-Function Output *1
Induction Motor Auto-Tuning	Rotational	Rotational Auto-Tuning	T1-01 = 0	Disabled	Functions the same as during usual operation.
	Stationary	Stationary Auto-Tuning 1	T1-01 = 1	Disabled	Keeps the status at the start of Auto-Tuning.
		Line-to-Line Resistance	T1-01 = 2	Disabled	Keeps the status at the start of Auto-Tuning.
PM Motor Auto-Tuning	Rotational	PM Motor Code Selection	T2-01 = 4	Disabled	Functions the same as during usual operation.
	Stationary	Manual Entry w/ Motor Data Sheet	T2-01 = 0	Disabled	Disabled
		PM Stationary Auto-Tuning	T2-01 = 1	Disabled	Keeps the status at the start of Auto-Tuning.
		PM Stationary Auto-Tuning for Stator Resistance	T2-01 = 2	Disabled	Keeps the status at the start of Auto-Tuning.
		High Frequency Injection	T2-01 = 5	Disabled	Keeps the status at the start of Auto-Tuning.
EZ Tuning	Stationary	Motor Parameter Setting	T4-01 = 0	Disabled	Disabled
		Line-to-Line Resistance	T4-01 = 1	Disabled	Keeps the status at the start of Auto-Tuning.
ASR and Inertia Tuning	Rotational	Deceleration Rate Tuning	T3-00 = 2	Disabled	Functions the same as during usual operation.
		KEB Tuning	T3-00 = 3	Disabled	Functions the same as during usual operation.

*1 When you set a terminal to *H2-xx = 3 [MFDO Function Selection = Fault]*, it will function the same as during usual operation.

WARNING! *Crush Hazard. Wire a sequence that will not let a multi-function output terminal open the holding brake during Stationary Auto-Tuning. If the holding brake is open during Stationary Auto-Tuning, it can cause serious injury or death.*

WARNING! *Sudden Movement Hazard.. Before you do Rotational Auto-Tuning, disconnect the load from the motor. The load can move suddenly and cause serious injury or death.*

WARNING! *Crush Hazard. Rotational Auto-Tuning rotates the motor at 50% or more of the motor rated frequency. Make sure that there are no issues related to safety in the area around the drive and motor. Increased motor frequency can cause serious injury or death.*

WARNING! *Electrical Shock Hazard. During Auto-Tuning, the motor will receive high voltage when the motor is stopped. Do not touch the motor until Auto-Tuning is complete. If you touch a motor that is energized, it can cause serious injury or death.*

■ Precautions before Rotational Auto-Tuning

WARNING! *Electrical Shock Hazard. During Auto-Tuning, the motor will receive high voltage when the motor is stopped. Do not touch the motor until Auto-Tuning is complete. If you touch a motor that is energized, it can cause serious injury or death.*

- Uncouple the drive from the motor before Rotational Auto-Tuning to prevent drive malfunction. If you do Rotational Auto-Tuning with the motor connected to a load that is more than 30% of the motor duty rating, the drive will not correctly calculate the motor parameters and the motor can operate incorrectly.
- When the load is 30% or less of the motor duty rating, you can do Auto-Tuning with the motor connected to a load.
- Make sure that the motor magnetic brake is released.
- Make sure that external force from the machine will not cause the motor to rotate.

■ Precautions before Stationary Auto-Tuning

- Make sure that the motor magnetic brake is not open.
- Make sure that external force from the machine will not cause the motor to rotate.

WARNING! *Electrical Shock Hazard. During Auto-Tuning, the motor will receive high voltage when the motor is stopped. Do not touch the motor until Auto-Tuning is complete. If you touch a motor that is energized, it can cause serious injury or death.*

■ Automatically Set E2-02 [Mot Rated Slip] and E2-03 [Mot No-Load Current]

If *T1-12 = 1 [Test Mode Selection = Yes]* when selecting Stationary Auto-Tuning, the drive will automatically set motor parameters *E2-02 [Mot Rated Slip]* and *E2-03 [Mot No-Load Current]* after Auto-Tuning is complete when you use the motor for the first time in Drive Mode.

After Stationary Auto-Tuning is complete, use this procedure to do the operation in test mode:

1. Check the *E2-02* and *E2-03* values on the "Modified Parameters/Fault Log" screen or the "Parameters" screen.
2. Operate the motor in Drive Mode with these conditions:
   - Make sure that you connect all wiring between the drive and motor
   - Make sure that a mechanical brake on the motor shaft is not locked
   - The maximum motor load must be 30% of the rated load.
   - Keep a constant speed of 30% of *E1-06 [Base Frequency]* (default value = maximum frequency) or more for 1 second or longer.
3. After the motor stops, examine the values of *E2-02* and *E2-03* again in the Verify Menu or Parameter Setting Mode.
4. Make sure that the input data is correct.
   When the settings in *E2-02* and *E2-03* are different than in step 1, the drive set the values automatically.

■ Precautions before Stationary Auto-Tuning for Line-to-Line Resistance and Stator Resistance Auto-Tuning

In V/f control, when the motor cable is 50 meters (164 feet) or longer, do Stationary Auto-Tuning for Line-to-Line Resistance.

WARNING! *Electrical Shock Hazard. During Auto-Tuning, the motor will receive high voltage when the motor is stopped. Do not touch the motor until Auto-Tuning is complete. If you touch a motor that is energized, it can cause serious injury or death.*

■ Precautions before Using Deceleration Rate Tuning and KEB Tuning

Before Deceleration Rate Tuning or KEB Tuning, check these items:

- Do not do Deceleration Rate Tuning if you use a braking resistor unit or a regenerative converter.
- Do Deceleration Rate Tuning and KEB Tuning with the load attached to the motor.
- Do not do Deceleration Rate Tuning or KEB Tuning for these applications:
  In Deceleration Rate Tuning and KEB Tuning, the drive will automatically rotate the motor forward and accelerate and decelerate the motor again and again.
  - On a machine that does not let the motor rotate forward
  - In applications with a small range of operation (trolleys and other such applications that can only move linearly)
  - In elevator applications
  - Applications where sudden acceleration and sudden deceleration are not applicable.
- To do KEB Tuning with the external main circuit capacitors connected to the drive, set *L3-26 [DC Bus Capacitors Extension]* then do KEB Tuning.
- Do not do KEB Tuning or Deceleration Rate Tuning if the drive is set to use *H1-xx = 61 [MFDI Function Select = Motor 2 Select]*. Failure to obey can cause an *ov [Overvoltage]* fault.

4.10 Test Run

After you set the basic parameters and do Auto-Tuning, do a test run.

WARNING! *Crush Hazard. Test the system to make sure that the drive operates safely after you wire the drive and set parameters. If you do not test the system, it can cause damage to equipment or serious injury or death.*

◆ No-Load Test Run

Before connecting the motor to the machine, make sure that you check the operation status of the motor.

■ Precautions before Operation

Before rotating the motor, check these items:

- Check for safety issues near the drive, motor, and machine.
- Make sure that all emergency stop circuits and machine safety mechanisms are operating correctly.

■ Items to Check before Operation

Check these items before operation:

- Is the motor rotating in the forward direction?
- Is the motor rotating smoothly (no unusual sounds or unusual vibrations)?
- Does the motor accelerate/decelerate smoothly?

◆ Do a No-Load Test Run

Do these steps for a no-load test run:

1. Energize the drive, or push ESC to show the frequency reference screen.
2. Push LO/RE to illuminate the LOCAL/REMOTE LED.
3. Use ∧ / ∨ / < / > to set *d1-01 = 6.00 [Reference 1 = 6.00 Hz]*, then push ↵.
4. Push RUN.
   The RUN indicator illuminates, and the motor runs at 6.00 Hz in the forward direction.
5. Make sure that the motor is rotating in the correct direction and that the drive does not show a fault.
   If the drive detects a fault, remove the cause.

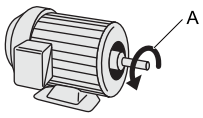

A - Forward Rotation of Motor (Counter Clockwise Direction as Seen from Load Shaft)

6. Push ∧ to increase the frequency reference value.
   Change the setting value in increments of 10 Hz if necessary and examine the response.
   Ex.: 6 Hz → 20 Hz → 30 Hz → 40 Hz → 50 Hz → 60 Hz
7. Each time you increase the setting value, use *U1-03 [Output Current]* to check the drive output current.
   When the output current of the drive is not more than the motor rated current, the status is correct.
8. Make sure that the motor rotates correctly, then push STOP.
   The RUN LED flashes and goes off when the motor stops completely.

◆ Actual-Load Test Run

Test the operation without a load, then connect the motor and machine to do a test run.

■ Precautions before Operation

Before rotating the motor, check these items:

- Check for safety issues near the drive, motor, and machine.
- Make sure that all emergency stop circuits and machine safety mechanisms are operating correctly.

- Make sure that the motor is fully stopped.
- Connect the motor with the machine.
  Make sure that there are no loose installation screws and that the motor load shafts and machine junctions are correctly secured.
- Keep the keypad near you to push STOP immediately if there is unusual or incorrect operation.

■ Items to Check before Operation

- Make sure that the direction of the machine operation is correct (The motor must rotate in the correct direction).
- Make sure that the motor accelerates and decelerates smoothly.

◆ Do an Actual-Load Test Run

Before a test run, make sure that *U1-03 [Output Current]* is not too high.

Connect the motor and machine, then do the test run with the same procedure that you used for the no-load test run.

1. Energize the drive, or push ESC to show the frequency reference screen.
2. Use ∧ / ∨ / < / > to set *d1-01 = 6.00 [Reference 1 = 6.00 Hz]*, then push ↵.
3. Push LO/RE to illuminate the LOCAL/REMOTE LED.
4. Push RUN.
   The RUN indicator illuminates, and the motor runs at 6.00 Hz in the forward direction.
5. Make sure that the motor is rotating in the correct direction and that the drive does not show a fault.
   If the drive detects a fault, remove the cause.
6. Push ∧ to increase the frequency reference value.
   Change the setting value in increments of 10 Hz if necessary and examine the response.
   Ex.: 6 Hz → 20 Hz → 30 Hz → 40 Hz → 50 Hz → 60 Hz
7. Each time you increase the setting value, use *U1-03 [Output Current]* to check the drive output current.
   When the output current of the drive is not more than the motor rated current, the status is correct.
8. Make sure that the motor rotates correctly, then push STOP.
   The RUN LED flashes and goes off when the motor stops completely.
9. Change the frequency reference and direction of motor rotation, and make sure that there are no unusual sounds or vibrations.
10. If the control function causes hunting or oscillation errors, adjust the settings to stop the errors.

4.11 Fine Tuning during Test Runs (Adjust the Control Function)

This section gives information about the adjustment procedures to stop hunting or oscillation errors caused by the control function during a test run. Adjust the applicable parameters as specified by your control method and drive status.

Note:

This section only lists frequently adjusted parameters. If you must adjust parameters that have a higher degree of precision, contact the manufacturer.

◆ V/f Control

Table 4.17 Parameters for Fine Tuning the Drive (*A1-02 = 0 [V/f Control]*)

Issue	Parameter Number	Possible Solutions	Default	Recommended Setting
Hunting or oscillation at mid-range speeds (10 Hz to 40 Hz)	n1-02 [HuntPrev Gain Setting]	• If torque is not sufficient with heavy loads, decrease the setting value. • If hunting or oscillation occur with light loads, increase the setting value. • If hunting occurs with a low-inductance motor, for example a motor with a larger frame size or a high-frequency motor, lower the setting value. Set *n1-01 = 1 [HuntPrev Selection = Enabled]*.	1.00	0.10 - 2.00
• The volume of the motor excitation sound is too high. • Hunting or oscillation at low speeds (10 Hz or lower), or at mid-range speeds (10 Hz to 40 Hz)	C6-02 [Carrier Frequency Selection]	• If the volume of the motor excitation sound is too high, increase the carrier frequency. • If hunting or oscillation occur at low or mid-range speeds, decrease the carrier frequency.	1 (2 kHz) *1	1 to upper limit value
• Unsatisfactory motor torque and speed response • Hunting or oscillation	C4-02 [Trq Comp Delay Time]	• If torque or speed response are slow, decrease the setting value. • If hunting or oscillation occur, increase the setting value.	200 ms *2	100 ms to 1000 ms
• Torque at low speeds (10 Hz or lower) is not sufficient. • Hunting or oscillation	C4-01 [Trq Comp Gain]	• If torque at low speeds (10 Hz or lower) is not sufficient, increase the setting value. • If hunting or oscillation occur with light loads, decrease the setting value.	1.00	0.50 - 1.50
• If you use the drive with an IE3 high efficiency motor, the current that is more than the motor rated current will flow and trip at overload. Hunting or oscillation.	C4-01 [Trq Comp Gain]	Decrease the setting value in these conditions: • Drive trips at overload. • Hunting or oscillation.	1.00	0.00 - 1.00
• Torque at low speeds (10 Hz or lower) is not sufficient. • Large initial vibration at start up.	• E1-08 [Mid A Voltage] • E1-10 [Min Output Voltage]	• If torque at low speeds (10 Hz or lower) is not sufficient, increase the setting value. • If there is large initial vibration at start up, decrease the setting value	• E1-08: 16.0 V *3 • E1-10: 12.0 V *3	Default setting +/- 5 V *4
Speed precision is unsatisfactory.	C3-01 [Slip Comp Gain]	Set *E2-01 [Mot Rated Current (FLA)]*, *E2-02 [Mot Rated Slip]*, *and E2-03 [Mot No-Load Current]*, then adjust *C3-01*.	0.0 (no slip compensation)	0.5 - 1.5

*1 The default setting changes when the settings for *C6-01 [ND/HD Duty Selection] and o2-04 [Drive KVA Selection]* change.
*2 The default setting changes when the settings for *A1-02 [Control Method] and o2-04* change.
*3 The default setting changes when the settings for *A1-02 and E1-03 [V/f Pattern Selection]* change.
*4 Recommended settings are for 200 V class drives. Multiply the voltage by 2 for 400 V class drives.

◆ Open Loop Vector Control Method

In Open Loop Vector Control, keep *C4-01 [Trq Comp Gain]* at its default setting (1.00).

If you cannot get speed precision during regeneration in Open Loop Vector Control, set *C3-04 = 1 [Slip Comp@Regen = Enable>6 Hz]*.

Table 4.18 Parameters for Fine Tuning the Drive (*A1-02 = 2 [OLVector]*)

Issue	Parameter Number	Possible Solutions	Default	Recommended Setting
• Unsatisfactory motor torque and speed response • Hunting or oscillation at mid-range speeds (10 Hz to 40 Hz)	n2-01 [AFR Gain]	• To increase the speed of torque or speed response, decrease the setting value in increments of 0.05. • If hunting or oscillation occur, decrease the setting value in increments of 0.05.	1.00	0.50 - 2.00
	n2-02 [AFR Time 1]	• To increase the speed of torque or speed response, decrease the setting value in increments of 10 ms and examine the response. • If hunting or oscillation occur or if the load inertia is too much, increase the setting value in increments of 50 ms and examine the response. **Note:** Make sure that this parameter setting is: *n2-02 ≤ n2-03 [AFR Time 2]* holds true. When you adjust *n2-02*, you must also increase the *C4-02 [Trq Comp Delay Time]* value by the same ratio.	50 ms	50 ms to 2000 ms
ov [overvoltage] occurs when the drive stops accelerating, starts to decelerate, or when there are large changes in the load.	n2-03 [AFR Time 2]	• If *ov* occurs, increase the setting value in increments of 50 ms and examine the response. • If the response is not sufficient, decrease the setting value in increments of 10 ms and examine the response. **Note:** Make sure that this parameter setting is: *n2-02 [AFR Time 1] ≤ n2-03*. When you adjust *n2-03*, you must also increase the *C4-06 [M2 Trq Comp Delay Time]* value by the same ratio.	750 ms	750 ms to 2000 ms
	C4-06 [M2 Trq Comp Delay Time]	• If *ov* occurs, increase the setting value in increments of 10 ms and examine the response. • If the response is not sufficient, decrease the setting value in increments of 2 ms and examine the response. **Note:** Make sure that this parameter setting is: *C4-02 [Trq Comp Delay Time] ≤ C4-06*. When you adjust *C4-06*, you must also increase the *n2-03 [AFR Time 2]* value by the same ratio.	150 ms	150 ms to 750 ms
• Unsatisfactory motor torque and speed response • Hunting or oscillation	C4-02 [Trq Comp Delay Time]	• If torque or speed response are slow, decrease the setting value in increments of 2 ms. • If hunting or oscillation occur, increase the setting value in increments of 10 ms. **Note:** Make sure that this parameter setting is: *C4-02 ≤ C4-06 [M2 Trq Comp Delay Time]*. When you adjust *C4-02*, you must also increase the *n2-02 [AFR Time 1]* value by the same ratio.	20 ms **1*	20 ms - 100 ms **1*
• Speed response is slow. • Speed is not stable.	C3-02 [Slip Comp Delay Time]	• If speed response is slow, decrease the setting value in increments of 10 ms. • If speed is not stable, increase the value in increments of 10 ms.	200 ms **1*	100 ms to 500 ms
Speed precision is unsatisfactory.	C3-01 [Slip Comp Gain]	• If speed is too slow, increase the setting value in increments of 0.1. • If speed is too fast, decrease the setting value in increments of 0.1.	1.0 **2*	0.5 - 1.5
• The volume of the motor excitation sound is too high. • Hunting or oscillation at low speeds (10 Hz or lower)	C6-02 [Carrier Frequency Selection]	• If the volume of the motor excitation sound is too high, increase the carrier frequency. • If hunting or oscillation occur at low speeds, decrease the carrier frequency.	7(Swing PWM1) **3*	0 to upper limit value
• Torque at low speeds (10 Hz or lower) is not sufficient. speed response is slow. • Speed response is slow. • Large initial vibration at start up.	• E1-08 [Mid A Voltage] • E1-10 [Min Output Voltage]	• If torque or speed response are slow, increase the setting value. • If there is large initial vibration at start up, decrease the setting value **Note:** If you set the value too high, the drive can output a large torque reference although the load is light.	• E1-08: 12.0 V **2* • E1-10: 2.5 V **2*	Default setting +/- 2 V **4*

*1 The default setting changes when the settings for *A1-02 [Control Method]* and *o2-04 [Drive KVA Selection]* change.
*2 The default setting changes when the settings for *A1-02 [Control Method]* and *E1-03 [V/f Pattern Selection]* change.
*3 The default setting changes when the settings for *C6-01 [Normal / Heavy Duty Selection]* and *o2-04* change.
*4 Recommended settings are for 200 V class drives. Multiply the voltage by 2 for 400 V class drives.

◆ Fine-Tuning Open Loop Vector Control for PM Motors

Table 4.19 Parameters for Fine Tuning the Drive (*A1-02 = 5 [PM OLVector]*)

Issue	Parameter Number	Possible Solutions	Default	Recommended Setting
Unsatisfactory motor performance	E1-xx parameters, E5-xx parameters	• Check the settings for *E1-06, E1-04 [Base Frequency, Max Output Frequency]*. • Check the *E5-xx* and make sure that all motor data has been set correctly. **Note:** Do not set *E5-05 [PM Mot Resistance (Ohms/Phase)]* to a line-to-line resistance value. • Do Auto-Tuning.	-	-
Unsatisfactory motor torque and speed response	n8-55 [Load Inertia]	Adjust to match the load inertia ratio of the motor and machine.	0	Near the actual load inertia ratio.
	n8-45 [SpdFbck Det.Gain]	Decrease the setting value in increments of 0.05.	0.80	-
	C4-01 [Trq Comp Gain]	Adjust the setting value. **Note:** Setting this value too high can cause overcompensation and motor oscillation.	0.00	1.00
• Oscillation when the motor starts. • Motor stalls.	n8-51 [Ac/Dec Pull-In Current]	Increase the setting value in increments of 5%.	50%	-
	• b2-02 [DCI Braking Current] • b2-03 [DCInj Time@Start]	Use DC Injection Braking at start. **Note:** This can cause the motor to rotate in reverse for approximately 1/8 of a turn at start.	• b2-02: 50% • b2-03: 0.00 s	• b2-02: Adjust as necessary. • b2-03: 0.5 s
	n8-55 [Load Inertia]	Increase the setting value. **Note:** When operating a single motor or with a minimum amount of inertia, setting this value too high can cause motor oscillation.	0	Near the actual load inertia ratio.
There is too much current during deceleration.	n8-79 [Pull-In Curr@Deceleration]	Set *n8-79* < *n8-51*.	50% **Note:** When *n8-79* = *0*, the drive will apply the *n8-51* setting to the pull-in current during deceleration.	Decrease in increments of 5%.
Stalling or oscillation occurs when load is applied during constant speed	n8-47 [Pull-In Comp.Time Constant]	Decrease the setting value in increments of 0.2 s.	5.0 s	-
	n8-48 [Pull-In Current (for PM Motors)]	Increase the setting value in increments of 5%.	30%	-
	n8-55 [Load Inertia]	Increase the setting value. **Note:** When operating a single motor or with a minimum amount of inertia, setting this value too high can cause motor oscillation.	0	Near the actual load inertia ratio.
Hunting or oscillation	n8-45 [SpdFbck Det.Gain]	Increase the setting value in increments of 0.05.	0.80	-
The drive detects *STPo [Motor Step-Out Detected]* fault when the load is not too high.	• E5-09 [PM BackEMF Vpeak (mV/(rad/ s))] • E5-24 [PM BackEMF L-L Vrms (mV/rpm)]	• Adjust the setting value. • Examine the motor code on the motor nameplate or the data sheet, then set correct values for *E5-09* or *E5-24*.	**1*	• Yaskawa motor Set the motor code from the motor nameplate. • Motor from another manufacturer Set the values from the test report.
The drive detected stalling or *STPo [Motor Step-Out Detected]* at high speed and maximum output voltage.	n8-62 [Output Volt Limit Level]	Set to a value lower than the actual input voltage.	• 200.0 V • 400.0 V	-

*1 The default setting changes when the settings for *E5-01 [PM Mot Code Selection]* and *o2-04 [Drive KVA Selection]* change.

◆ Advanced Open Loop Vector Control Method for PM

Table 4.20 Parameters for Fine Tuning the Drive (*A1-02 = 6 [PM AOLVector]*)

Issue	Parameter Number	Possible Solutions	Default	Recommended Setting
• Unsatisfactory motor torque and speed response • Hunting or oscillation	• High speed C5-01 [ASR PGain 1] • Low speed C5-03 [ASR PGain 2]	• If torque or speed response are slow, increase the setting value in increments of 5.00. • If hunting or oscillation occur, decrease the setting value.	10.00	5.00 to 30.00 *1
	• High speed C5-02 [ASR ITime 1] • Low speed C5-04 [ASR ITime 2]	• If torque or speed response are slow, decrease the setting value. • If hunting or oscillation occur, increase the setting value.	0.500 s	0.300 s to 1.000 s *1
The drive cannot find ASR proportional gain or integral time for low speed or high speed.	C5-07 [ASR Gain Switch Frequency]	Change the ASR proportional gain and ASR integral time to conform to the output frequency.	0.0%	0.0% to maximum rotation speed
Hunting or oscillation	C5-06 [ASR Delay Time]	If the rigidity of the machine is unsatisfactory and vibration is possible, increase the setting value in increments of 0.010.	0.016 s	0.016 s to 0.035 s *1
Step-out	E1-xx parameters, E5-xx parameters	Refer to the motor nameplate or test report and set *E1-xx* or *E5-xx* correctly.	-	-

*1 The best values for a no-load operation are different than the best values for actual loading operation.

◆ EZ Open Loop Vector Control Method

Table 4.21 Parameters for Fine Tuning the Drive (*A1-02 = 8 [EZ Vector]*)

Issue	Parameter Number	Possible Solutions	Default	Recommended Setting
• Unsatisfactory motor torque and speed response • Hunting or oscillation	• High speed C5-01 [ASR PGain 1] • Low speed C5-03 [ASR PGain 2]	• If torque or speed response are slow, increase the setting value in increments of 5.00. • If hunting or oscillation occur, decrease the setting value.	10.00	10.00 to 50.00 *1
	• High speed C5-02 [ASR ITime 1] • Low speed C5-04 [ASR ITime 2]	• If torque or speed response are slow, decrease the setting value. • If hunting or oscillation occur, increase the setting value.	0.500 s	0.300 s to 1.000 s *1
The drive cannot find ASR proportional gain or integral time for low speed or high speed.	C5-07 [ASR Gain Switch Frequency]	Change the ASR proportional gain and ASR integral time to conform to the output frequency.	0.0%	0.0% to maximum rotation speed
Hunting or oscillation	C5-06 [ASR Delay Time]	If the rigidity of the machine is unsatisfactory and vibration is possible, increase the setting value in increments of 0.010.	0.004 s	0.004 s to 0.020 s *1
Step-out	E9-xx parameters	Refer to the motor nameplate or test report and set *E9-xx* correctly.	-	-
Oscillation when the motor starts.	n8-51 [Ac/Dec Pull-In Current]	Increase the setting value.	80%	Increase in increments of 5%.
Motor stalls.	L7-01 to L7-04 [FW Torque Limit to RV Reg. TrqLimit]	Increase the setting value.	200%	Increase in increments of 10%.

*1 The best values for a no-load operation are different than the best values for actual loading operation.

4.12 Test Run Checklist

Examine the items in this checklist and check each item before a test run.

Checked	No.	Description
	1	Correctly install and wire the drive as specified by this manual.
	2	Energize the drive.
	3	Set the voltage for the power supply in *E1-01 [Input AC Supply Voltage]*.

Check the applicable items as specified by your control method.

WARNING! *Sudden Movement Hazard. Correctly wire the start/stop and safety circuits before you energize the drive. If you momentarily close a digital input terminal, it can start a drive that is programmed for 3-Wire control and cause serious injury or death from moving equipment.*

Table 4.22 V/f [A1-02 = 0]

Checked	No.	Description
	4	Select the best V/f pattern for your application and motor characteristics. Example: For a motor with a rated frequency of 60 Hz, set *E1-03 = 1 [V/f Pattern Selection = CT_60-60Hzmax]* as a standard V/f pattern.

Table 4.23 OLV [A1-02 = 2]

Checked	No.	Description
	5	Decouple motor shafts and machines.
	6	Refer to the information on the motor nameplate and set this data correctly: • Motor rated power (kW) to *T1-02* • Motor rated voltage (V) to *T1-03* • Motor rated current (A) to *T1-04* • Motor base frequency (Hz) to *T1-05* • Number of motor poles to *T1-06* • Motor base speed (min^{-1}) to *T1-07*
	7	Do Rotational Auto-Tuning.

Table 4.24 OLV/PM [A1-02 = 5]

Checked	No.	Description
	8	Set *E5-01 through E5-24 [PM Motor Settings]*.

Table 4.25 AOLV/PM [A1-02 = 6]

Checked	No.	Description
	9	Set *E5-01 through E5-24 [PM Motor Settings]*.
	10	Set *C5-01 [ASR PGain 1] and C5-02 [ASR ITime 1]*.

Checked	No.	Description
	11	Make sure that the keypad shows READY LED before you start to operate the motor.
	12	To give the Run command and frequency reference from the keypad, push LO/RE to set to LOCAL Mode (when in LOCAL Mode, the LO/RE LED illuminates).
	13	If the motor rotates in the opposite direction during test run, switch two of the motor cables (U/T1, V/T2, W/T3).
	14	Set Heavy Duty or Normal Duty Mode with *C6-01 [ND/HD Duty Selection]* to conform to the load condition.
	15	Set *E2-01 [Mot Rated Current (FLA)] and L1-01 [Motor Cool Type for OL1 Calc]* correctly for motor thermal protection.
	16	Set the drive for REMOTE Mode when the control circuit terminals supply the Run command and frequency reference (in REMOTE Mode, the LO/RE LED turns OFF).
	17	When you use terminal AI1 for the frequency reference: • Set *H3-01 = 0, 1 [AI1 Signal Level Select = 0 to 10V (Lower Limit at 0), 0 to +10 V (Without Lower Limit)]*. • Set *H3-02 = 4 [AI1 Function Selection = Freq Ref/BIAS]*.

Checked	No.	Description
	18	When you use terminal AI2 for the frequency reference: • Voltage input – Set DIP Switch S1 on the drive to “V”. – Set *H3-09 = 0, 1 [AI2 Signal Level Select = 0 to 10V (Lower Limit at 0), 0 to +10V (Without Lower Limit)]*. – Set *H3-10 = 4 [AI2 Function Selection = Freq Ref/BIAS]*. • Current input – Set DIP Switch S1 on the drive to “I”. – Set *H3-09 = 2, 3 [AI2 Signal Level Select = 4 to 20 mA, 0 to 20 mA]*. – Set *H3-10 = 4 [AI2 Function Selection = Freq Ref/BIAS]*.
	19	Make sure that the frequency reference gets to the necessary minimum and maximum values. If drive operation is incorrect, make these adjustments: • Gain Adjustment Set the maximum voltage and current values, then adjust the analog input gain until the frequency reference is at the necessary value. – For terminal AI1 input: *H3-03* – For terminal AI2 input: *H3-11* • Bias adjustment Set the maximum voltage and current values, then adjust the analog input gain until the frequency reference is at the necessary value. – For terminal AI1 input: *H3-04* – For terminal AI2 input: *H3-12*

5

Standards Compliance

5.1 Safety Precautions 138
5.2 European Standards 140
5.3 UL Standards 165
5.4 对应中国RoHS指令 177
5.5 China RoHS Compliance 178
5.6 Safe Disable Input 179

5.1 Safety Precautions

⚠DANGER

Electrical Shock Hazard

Do not examine, connect, or disconnect wiring on an energized drive. Before servicing, disconnect all power to the equipment and wait for the time specified on the warning label at a minimum. The internal capacitor stays charged after the drive is de-energized. The charge indicator LED extinguishes when the DC bus voltage decreases below 50 Vdc. When all indicators are OFF, measure for dangerous voltages to make sure that the drive is safe.

If you do work on the drive when it is energized, it will cause serious injury or death from electrical shock. The drive has internal capacitors that stay charged after you de-energize the drive.

⚠WARNING

Electrical Shock Hazard

Do not operate the drive when covers are missing. Replace covers and shields before you operate the drive. Use the drive only as specified by the instructions.

Some figures in this section include drives without covers or safety shields to more clearly show the inside of the drive. If covers or safety shields are missing from the drive, it can cause serous injury or death.

Always ground the motor-side grounding terminal.

If you do not ground the equipment correctly, it can cause serious injury or death if you touch the motor case.

Do not remove covers or touch circuit boards while the drive is energized.

If you touch the internal components of an energized drive, it can cause serious injury or death.

Only let approved personnel install, wire, maintain, examine, replace parts, and repair the drive.

If personnel are not approved, it can cause serious injury or death.

Do not wear loose clothing or jewelry when you do work on the drive. Tighten loose clothing and remove all metal objects, for example watches or rings.

Loose clothing can catch on the drive and jewelry can conduct electricity and cause serious injury or death.

Do not modify the drive body or drive circuitry.

Modifications to drive body and circuitry can cause serious injury or death, will cause damage to the drive, and will void the warranty. The manufacturer is not responsible for modifications of the product made by the user.

Fire Hazard

Tighten all terminal screws to the correct tightening torque.

Connections that are too loose or too tight can cause incorrect operation and damage to the drive. Incorrect connections can also cause death or serious injury from fire.

Tighten screws at an angle in the specified range shown in this manual.

If you tighten the screws at an angle not in the specified range, you can have loose connections that can cause damage to the terminal block or start a fire and cause serious injury or death.

Do not use the main circuit power supply (Overvoltage Category III) at incorrect voltages. Operate the drive in the specification range of the input voltage on the drive nameplate.

Voltages that are higher than the permitted nameplate tolerance can cause damage to the drive.

Do not put flammable or combustible materials on top of the drive and do not install the drive near flammable or combustible materials. Attach the drive to metal or other noncombustible material.

Flammable and combustible materials can start a fire and cause serious injury or death.

⚠WARNING

Crush Hazard

Wear eye protection when you do work on the drive.

If you do not use correct safety equipment, it can cause serious injury or death.

Electrical Shock Hazard

After the drive blows a fuse or trips an RCM/RCD, do not immediately energize the drive or operate peripheral devices. Wait for the time specified on the warning label at a minimum and make sure that all indicators are OFF. Then check the wiring and peripheral device ratings to find the cause of the problem. If you do not know the cause of the problem, contact the manufacturer before you energize the drive or peripheral devices.

If you do not fix the problem before you operate the drive or peripheral devices, it can cause serious injury or death.

NOTICE

When you touch the drive and circuit boards, make sure that you observe correct electrostatic discharge (ESD) procedures.

If you do not follow procedures, it can cause ESD damage to the drive circuitry.

Do not break the electrical connection between the drive and the motor when the drive is outputting voltage.

Incorrect equipment sequencing can cause damage to the drive.

Before you connect a dynamic braking option to the drive, make sure that qualified personnel read and obey the Braking Unit and Braking Resistor Unit Installation Manual (TOBPC72060001).

If you do not read and obey the manual or if personnel are not qualified it can cause damage to the drive and braking circuit.

Make sure that all connections are correct after you install the drive and connect peripheral devices.

Incorrect connections can cause damage to the drive.

Note:

Do not use unshielded cable for control wiring. Use shielded, twisted-pair wires and ground the shield to the ground terminal of the drive. Unshielded wire can cause electrical interference and unsatisfactory system performance.

5.2 European Standards

Figure 5.1 CE Mark

The CE Mark identifies that the product meets environmental and safety standards in the European Union. Products manufactured, sold, or imported in the European Union must display the CE Mark.

European Union standards include standards for electrical appliances (Low Voltage Directive), standards for electrical noise (EMC Directive), and standards for machinery (Machinery Directive).

This product displays the CE Mark in accordance with the Low Voltage Directive, the EMC Directive, and the Machinery Directive.

Table 5.1 Harmonized Standard

European Directive	Harmonized Standard
CE Low Voltage Directive Compliance 2014/35/EU	EN 61800-5-1:2007
EMC Directive 2014/30/EU	EN 61800-3:2004/A1:2012
Machinery Directive 2006/42/EC	• EN ISO 13849-1:2015 (Cat.3, PL e) • EN 62061:2005/A2:2015 (SILCL3) • EN 61800-5-2:2007

◆ EU Declaration of Conformity

EU Declaration of Conformity

Original

YASKAWA

Ref.No. EU-DoC-Q2V<1>

YASKAWA Europe GmbH
Hauptstraße 185
65760 Eschborn

declares under sole responsibility conformity of the following products

Q2V AC Drives Series
Model: CIPR-GA50□□□□□□□□□□-□□□□□□
Q2V□□□□□-□□□

Directive of the European Parliament and Council

Low Voltage Directive (LVD):	**2014/35/EU**
Electromagnetic Compatibility Directive (EMC):	**2014/30/EU**
Machinery Directive (MD)	**2006/42/EC**
Restriction of the use of certain Hazardous Substances (RoHS):	**2011/65/EU**
EU ErP Directive: YASKAWA Q2V Series meets the requirements for IE2 efficiency according to the European regulation 2019/1781. The losses and the efficiency class were determined in accordance with EN 61800-9-2:2017.	**2009/125/EC**

Applied Harmonized Standards

EN 61800-5-1:2007 EN 61800-3:2004/A1:2012
EN ISO 13849-1:2015 (Cat.3, PL e)
EN 62061:2005/A2:2015 (SILCL3) EN 61800-5-2:2007 (SIL3)
EN IEC 63000:2018

9 Jun 2021

YASKAWA Europe GmbH
Hauptstraße 185
65760 Eschborn, Germany

Tobias Unger
General Manager
European Technology Center
Drives and Motion Division

EU Declaration of Conformity

Translation – German | French | Italian | Spanish | Portugese

YASKAWA

Ref.No. EUDoC-Q2V<13

EG-Konformitätserklärung | Déclaratione de conformiteé CE | Dichiarazione di conformità CE | Declaración de Conformidad de la CE | Declaração de Conformidade CE

YASKAWA Europe GmbH
Hauptstraße 185
65760 Eschborn

declares under sole responsibility conformity of the following products
erklärt in alleiniger Verantwortung die Konformität für folgende Produkte
déclare, sous sa seule responsabilité, que-les produits
dichiara sotto la propria esclusiva responsabilità la conformità dei seguenti prodotti
bajo su exclusiva responsabilidad la conformidad para los siguientes productos
declara, sob a sua exclusiva responsabilidade, a conformidade dos seguintes produtos

Q2V AC Drives Series
Model: CIPR-GA50□□□□□□□□□-□□□□□□
Q2V□□□□□-□□□

Directive of the European Parliament and Council
Richtlinie des Europäischen Parlamentes und Rates / Directive du Parlement européen et du Conseil / Direttiva del Parlamento europeo e del Consiglio / Directiva del Parlamento Europeo y del Consejo / Diretiva do Parlamento Europeu e do Conselho

Low Voltage Directive (LVD): **2014/35/EU**
Niederspannungsrichtlinie / Directive Basse Tension / Direttiva sulla bassa tensione / Directiva de Baja Tensión / Diretiva "Baixa Tensão"

Electromagnetic Compatibility Directive (EMC): **2014/30/EU**
EMV-Richtlinie / Directive CEM / Direttiva EMC / Directiva sobre Compatibilidad Electromagnética / Diretiva CEM

Machinery Directive (MD) **2006/42/EC**
Maschinenrichtlinie / Directive machines / Direttiva Macchine / Directiva de Máquinas / Directiva de máquinas

Restriction of the use of certain Hazardous Substances (RoHS): **2011/65/EU**
Beschränkung der Verwendung bestimmter gefährlicher Stoffe in Elektro- und Elektronikgeräten. / Relative à la limitation de l'utilisation de certaines substances dangereuses dans les équipements électriques et électroniques. / Sulla restrizione dell'uso di determinate sostanze pericolose nelle apparecchiature elettriche ed elettroniche. / Sobre restricciones a la utilización de determinadas sustancias peligrosas en aparatos eléctricos y electrónicos. / Relativa à restrição do uso de determinadas substâncias perigosas em equipamentos eléctricos e electrónicos.

EU ErP Directive: **2009/125/EC**
YASKAWA Q2V Series meets the requirements for IE2 efficiency according to the European regulation 2019/1781. The losses and the efficiency class were determined in accordance with EN 61800-9-2:2017.
EU ErP-Richtlinie
Die YASKAWA Q2V-Serie erfüllt die Anforderungen an den Wirkungsgrad IE2 gemäß der europäischen Verordnung 2019/1781. Die Verluste und die Wirkungsgradklasse wurden gemäß EN 61800-9-2:2017 ermittelt.
Directive européenne ErP
La série Q2V de YASKAWA répond aux exigences d'efficacité IE2 selon le règlement européen 2019/1781. Les pertes et la classe d'efficacité ont été déterminées conformément à la norme EN 61800-9-2:2017.
Direttiva europea ErP
La serie YASKAWA Q2V soddisfa i requisiti di efficienza IE2 secondo il regolamento europeo 2019/1781. Le perdite e la classe di efficienza sono state determinate secondo la norma EN 61800-9-2:2017.
Directiva ErP de la UE
La serie Q2V de YASKAWA cumple los requisitos de eficiencia IE2 según la normativa europea 2019/1781. Las pérdidas y la clase de eficiencia se determinaron de acuerdo con la norma EN 61800-9-2:2017.
Directiva ErP da UE
YASKAWA Q2V Series cumpre os requisitos de eficiência do IE2 de acordo com o regulamento europeu 2019/1781. As perdas e a classe de eficiência foram determinadas de acordo com a norma EN 61800-9-2:2017.

Applied Harmonized Standards
Angewandte harmonisierte Norm: / Normes harmonisées appliquées : / Norma armonizzata applicate: / Norma armonizada aplicada: / Normas harmonizadas aplicadas:

EN 61800-5-1:2007 EN 61800-3:2004/A1:2012
EN ISO 13849-1:2015 (Cat.3, PL e)
EN 62061:2005/A2:2015 (SILCL3) EN 61800-5-2:2007 (SIL3)
EN IEC 63000:2018

9 Jun 2021

YASKAWA Europe GmbH
Hauptstraße 185
65760 Eschborn, Germany

i.V. Tobias Unger

Tobias Unger
General Manager
European Technology Center
Drives and Motion Division

EU Declaration of Conformity

Translation – Dutch | Irish | Greek | Bulgarian | Romanian

YASKAWA

Ref.No. EU-DoC-Q2V<1>

EG-conformiteitsverklaring | Dearbhú Comhréireachta AE | Δήλωση Συμμόρφωσης ΕΚ | ЕО-Декларация за съответствие | Declarație de conformitate CE

YASKAWA Europe GmbH
Hauptstraße 185
65760 Eschborn

declares under sole responsibility conformity of the following products
verklaart onder eigen verantwoordelijkheid de conformiteit van de volgende producten / a dhearbhaíonn faoi fhreagracht aonair comhréireacht na dtáirgí seo a leanas / επιβεβαιώνει, με αποκλειστική του ευθύνη, τη συμμόρφωση των ακόλουθων προϊόντων / декларира на собствена отговорност съответствието на следния продукт / declară pe răspunderea sa exclusivă conformitatea următoarelor produse

Q2V AC Drives Series
Model: CIPR-GA50□□□□□□□□□-□□□□□□
Q2V□□□□□-□□□

Directive of the European Parliament and Council
Richtlijn van het Europese Parlement en de Europese Raad / Treoir ó Pharlaimint na hEorpa agus ón gComhairle / Οδηγία του Ευρωπαϊκού Κοινοβουλίου και του Συμβουλίου / Директива на Европейския парламент и Съвета / Directiva Parlamentului European și a Consiliului

Low Voltage Directive (LVD): **2014/35/EU**
Laagspanningsrichtlijn / Treoir maidir le hÍseálvoltas / Οδηγία για τη χαμηλή τάση / Директивата за ниско напрежение / Directive voltaj scăzut

Electromagnetic Compatibility Directive (EMC): **2014/30/EU**
EMC-richtlijn / Treoir maidir le Comhoiriúnacht Leictreamaighnéadach / Οδηγία ηλεκτρομαγνητικής συμβατότητας (EMC) / Директива за електромагнитна съвместимост / Directive CEM

Machinery Directive (MD) **2006/42/EC**
Machinerichtlijn / Treoir maidir le hInnill (MD) / Οδηγία για τα μηχανήματα / Директива Машини (ДМ) / Directive mașinărie

Restriction of the use of certain Hazardous Substances (RoHS): **2011/65/EU**
Betreffende beperking van het gebruik van bepaalde gevaarlijke stoffen in elektrische en elektronische apparatuur. / για τον περιορισμό της χρήσης ορισμένων επικίνδυνων ουσιών σε ηλεκτρικό και ηλεκτρονικό εξοπλισμό. / относно ограничението за употребата на определени опасни вещества в електрическото и електронното оборудване. / Privind restricțiile de utilizare a anumitor substanțe periculoase în echipamentele electrice și electronice.

EU ErP Directive: **2009/125/EC**
YASKAWA Q2V Series meets the requirements for IE2 efficiency according to the European regulation 2019/1781. The losses and the efficiency class were determined in accordance with EN 61800-9-2:2017.
EU ErP-richtlijn
De YASKAWA Q2V-serie voldoet aan de eisen voor IE2-efficiëntie volgens de Europese verordening 2019/1781. De verliezen en de efficiëntieklasse werden bepaald in overeenstemming met EN 61800-9-2:2017.
Treoir ErP an AE
Comhlíonann Sraith YASKAWA Q2V na ceanglais maidir le héifeachtúlacht IE2 de réir rialachán Eorpach 2019/1781. Socraíodh na cailliteanais agus an aicme éifeachtúlachta de réir EN 61800-9-2: 2017.
Οδηγία ErP της ΕΕ
Η σειρά Q2V της YASKAWA πληροί τις απαιτήσεις για την απόδοση IE2 σύμφωνα με τον ευρωπαϊκό κανονισμό 2019/1781. Οι απώλειες και η κλάση απόδοσης προσδιορίστηκαν σύμφωνα με το πρότυπο EN 61800-9-2:2017.
Директива ErP на ЕС
Серията YASKAWA Q2V отговаря на изискванията за ефективност IE2 съгласно европейския регламент 2019/1781. Загубите и класът на ефективност са определени в съответствие с EN 61800-9-2:2017.
Directiva UE ErP
Seria YASKAWA Q2V îndeplinește cerințele de eficiență IE2 în conformitate cu regulamentul european 2019/1781. Pierderile și clasa de eficiență au fost determinate în conformitate cu EN 61800-9-2:2017.

Applied Harmonized Standards
Toegepaste harmonisatienorm: / Caighdeáin chomhchuibhithe i bhfeidhm: / Εφαρμοζόμενο εναρμονισμένο πρότυπο: / Приложени хармонизирани норми: / Standard armonizat aplicat:

EN 61800-5-1:2007 EN 61800-3:2004/A1:2012
EN ISO 13849-1:2015 (Cat.3, PL e)
EN 62061:2005/A2:2015 (SILCL3) EN 61800-5-2:2007 (SIL3)
EN IEC 63000:2018

9 Jun 2021

YASKAWA Europe GmbH
Hauptstraße 185
65760 Eschborn, Germany

i.V. Tobias Unger

Tobias Unger
General Manager
European Technology Center
Drives and Motion Division

EU Declaration of Conformity

Translation – Polish | Lithuanian | Czech | Slovak | Hungarian

YASKAWA

Ref No. EU-DoC-Q2V<1>

Deklaracja zgodności WE | EB atitikties deklaracija | ES Prohlášení o shodě | Vyhlásenie o zhode ES | EK megfelelőségi nyilatkozat

YASKAWA Europe GmbH
Hauptstraße 185
65760 Eschborn

declares under sole responsibility conformity of the following products
oświadcza z wyłączną odpowiedzialnością, że niżej wymienione wyroby są zgodne z odpowiednimi przepisami unijnymi / prisiimdama atsakomybę patvirtina toliau nurodytų gaminių atitiktį / Prohlašuje na svou výhradní odpovědnost shodu níže uvedených výrobků / potvrdzuje výlučnú zodpovednosť za zhodu pre nasledujúce výrobky / saját kizárólagos felelősségére kijelenti, hogy a következő termékek megfelelnek az alábbiakban megfogalmazott követelményeknek

Q2V AC Drives Series
Model: CIPR-GA50□□□□□□□□□-□□□□□□
Q2V□□□□□-□□□

Directive of the European Parliament and Council
Dyrektywa Parlamentu Europejskiego i Rady / Europos Parlamento ir Tarybos direktyva / Směrnice Evropského parlamentu a Rady / Smernice Európskeho parlamentu a Rady / Az Európai Parlament és az Európai Tanács irányelve

Low Voltage Directive (LVD): **2014/35/EU**
Dyrektywa dot. niskich napięć / Žemos įtampos direktyva / Směrnice o zařízeních nízkého napětí / Smernica o nízkom napätí / Kisfeszültségről szóló irányelv

Electromagnetic Compatibility Directive (EMC): **2014/30/EU**
Dyrektywa EMC / EMS direktyva / Směrnice o elektromagnetické kompatibilitě / Smernica EMC / Elektromágneses összeférhetőségről szóló irányelv

Machinery Directive (MD) **2006/42/EC**
Dyrektywa w sprawie maszyn / Direktyva dėl mašinų / Směrnice o strojních zařízeních / Smernica o strojových zariadeniach / Gépekről szóló irányelv

Restriction of the use of certain Hazardous Substances (RoHS): **2011/65/EU**
W sprawie ograniczenia stosowania niektórych niebezpiecznych substancji w sprzęcie elektrycznym i elektronicznym. / Dėl tam tikrų pavojingų medžiagų naudojimo elektros ir elektroninėje įrangoje apribojimo. / O omezení používání některých nebezpečných látek v elektrických a elektronických zařízeních. / O obmedzení používania určitých nebezpečných látok v elektrických a elektronických zariadeniach. / Egyes veszélyes anyagok elektromos és elektronikus berendezésekben való alkalmazásának korlátozásáról.

EU ErP Directive: **2009/125/EC**
YASKAWA Q2V Series meets the requirements for IE2 efficiency according to the European regulation 2019/1781. The losses and the efficiency class were determined in accordance with EN 61800-9-2:2017.
Dyrektywa ErP UE
Seria YASKAWA Q2V spełnia wymagania dla sprawności IE2 zgodnie z europejską regulacją 2019/1781. Straty i klasa sprawności zostały określone zgodnie z normą EN 61800-9-2:2017.
ES ErP direktyva
YASKAWA Q2V serija atitinka IE2 efektyvumo reikalavimus pagal Europos reglamentą 2019/1781. Nuostoliai ir efektyvumo klasė buvo nustatyti pagal standartą EN 61800-9-2:2017.
Směrnice EU ErP
Řada YASKAWA Q2V splňuje požadavky na účinnost IE2 podle evropského nařízení 2019/1781. Ztráty a třída účinnosti byly stanoveny v souladu s normou EN 61800-9-2:2017.
Smernica EÚ o ErP
Séria YASKAWA Q2V spĺňa požiadavky na účinnosť IE2 podľa európskeho nariadenia 2019/1781. Straty a trieda účinnosti boli stanovené v súlade s normou EN 61800-9-2:2017.
EU ErP-irányelv
A YASKAWA Q2V sorozat megfelel a 2019/1781 európai rendelet szerinti IE2 hatékonysági követelményeknek. A veszteségeket és a hatékonysági osztályt az EN 61800-9-2:2017 szabvány szerint határozták meg.

Applied Harmonized Standards
Zastosowane zharmonizowane normy: / Taikomi darnieji standartai: / Použité harmonizované normy: / Aplikovaná harmonizovaná norma: / Alkalmazott harmonizált szabványok:

EN 61800-5-1:2007 EN 61800-3:2004/A1:2012
EN ISO 13849-1:2015 (Cat.3, PL e)
EN 62061:2005/A2:2015 (SILCL3) EN 61800-5-2:2007 (SIL3)
EN IEC 63000:2018

9 Jun 2021

YASKAWA Europe GmbH
Hauptstraße 185
65760 Eschborn, Germany

i.V. Tobias Unger

Tobias Unger
General Manager
European Technology Center
Drives and Motion Division

EU Declaration of Conformity

Translation – Danish | Swedish | Finnish | Latvian | Estonian

YASKAWA

Ref.No. EU-DoC-Q2V<1>

EF-overensstemmelseserklæring | EG-försäkran om överensstämmelse | EY-vaatimustenmukaisuusvakuutus | EK atbilstības deklarācija | EÜ vastavusdeklaratsioon

YASKAWA Europe GmbH
Hauptstraße 185
65760 Eschborn

declares under sole responsibility conformity of the following products
erklærer som eneste ansvarlig overensstemmelsen for følgende produkter / försäkrar på eget ansvar att följande produkter uppfyller kraven på överensstämmelse / vakuuttaa yksinomaisella vastuullaan seuraavien tuotteiden vaatimustenmukaisuuden / uz savu atbildību paziņo par tālāk minēto izstrādājumu atbilstību / deklareerib ainuvastutusel järgmiste toodete vastavust

Q2V AC Drives Series
Model: CIPR-GA50□□□□□□□□□-□□□□□□
Q2V□□□□□-□□□

Directive of the European Parliament and Council
Europa-Parlamentets og Rådets direktiv / EU-direktiv / Euroopan parlamentin ja neuvoston direktiivi / Eiropas Parlamenta un Padomes Direktīva / Euroopa Parlamendi ja nõukogu direktiiv

Low Voltage Directive (LVD): **2014/35/EU**
Lavspændingsdirektivet / Lågspänningsdirektivet / Pienjännitedirektiivi / Zemsprieguma direktīva / Madalpingedirektiiv

Electromagnetic Compatibility Directive (EMC): **2014/30/EU**
EMC-direktivet / EMC-direktivet / EMC-direktiivi / EMS direktīva / Elektromagnetilise ühilduvuse direktiiv

Machinery Directive (MD) **2006/42/EC**
Maskindirektivet / Maskindirektivet / Konedirektiivi / Mašīnu direktīva / Masinadirektiiv

Restriction of the use of certain Hazardous Substances (RoHS): **2011/65/EU**
Om begrænsning af anvendelsen af visse farlige stoffer i elektrisk og elektronisk udstyr. / Om begränsning av användning av vissa farliga ämnen i elektrisk och elektronisk utrustning. / Tiettyjen vaarallisten aineiden käytön rajoittamisesta sähkö- ja elektroniikkalaitteissa. / Par dažu bīstamu vielu izmantošanas ierobežošanu elektriskās un elektroniskās iekārtās. / Dėl tam tikrų pavojingų medžiagų naudojimo elektros ir elektroninėje įrangoje apribojimo.

EU ErP Directive: **2009/125/EC**
YASKAWA Q2V Series meets the requirements for IE2 efficiency according to the European regulation 2019/1781. The losses and the efficiency class were determined in accordance with EN 61800-9-2:2017.
EU ErP-direktivet
YASKAWA Q2V-serien opfylder kravene til IE2-effektivitet i henhold til den europæiske forordning 2019/1781. Tabene og effektivitetsklassen blev bestemt i overensstemmelse med EN 61800-9-2:2017.
EU Ekodesign Direktiv
YASKAWA Q2V-serien uppfyller kraven för IE2-effektivitet enligt EU-förordningen 2019/1781. Verkningsgraden har fastställts i enlighet med EN 61800-9-2:2017.
EU:n ErP-direktiivi
YASKAWA Q2V-sarja täyttää IE2-tehokkuusvaatimukset eurooppalaisen asetuksen 2019/1781 mukaisesti. Häviöt ja hyötysuhdeluokka määritettiin standardin EN 61800-9-2:2017 mukaisesti.
ES ErP direktīva
YASKAWA Q2V sērija atbilst IE2 efektivitātes prasībām saskaņā ar Eiropas regulu 2019/1781. Zaudējumi un efektivitātes klase tika noteikta saskaņā ar EN 61800-9-2:2017.
ELi ErP direktiiv
YASKAWA Q2V seeria vastab IE2 tõhususe nõuetele vastavalt Euroopa määrusele 2019/1781. Kaod ja kasuteguriklass määrati vastavalt standardile EN 61800-9-2:2017.

Applied Harmonized Standards
Anvendt harmoniseret standard: / Tillämpad harmoniserad standard: / Sovellettu harmonisoitu standardi: / Piemērotais saskaņotais standarts: / Rakendatud ühtlustatud standardid:

EN 61800-5-1:2007 EN 61800-3:2004/A1:2012
EN ISO 13849-1:2015 (Cat.3, PL e)
EN 62061:2005/A2:2015 (SILCL3) EN 61800-5-2:2007 (SIL3)
EN IEC 63000:2018

9 Jun 2021

YASKAWA Europe GmbH
Hauptstraße 185
65760 Eschborn, Germany

i.V. Tobias Unger

Tobias Unger
General Manager
European Technology Center
Drives and Motion Division

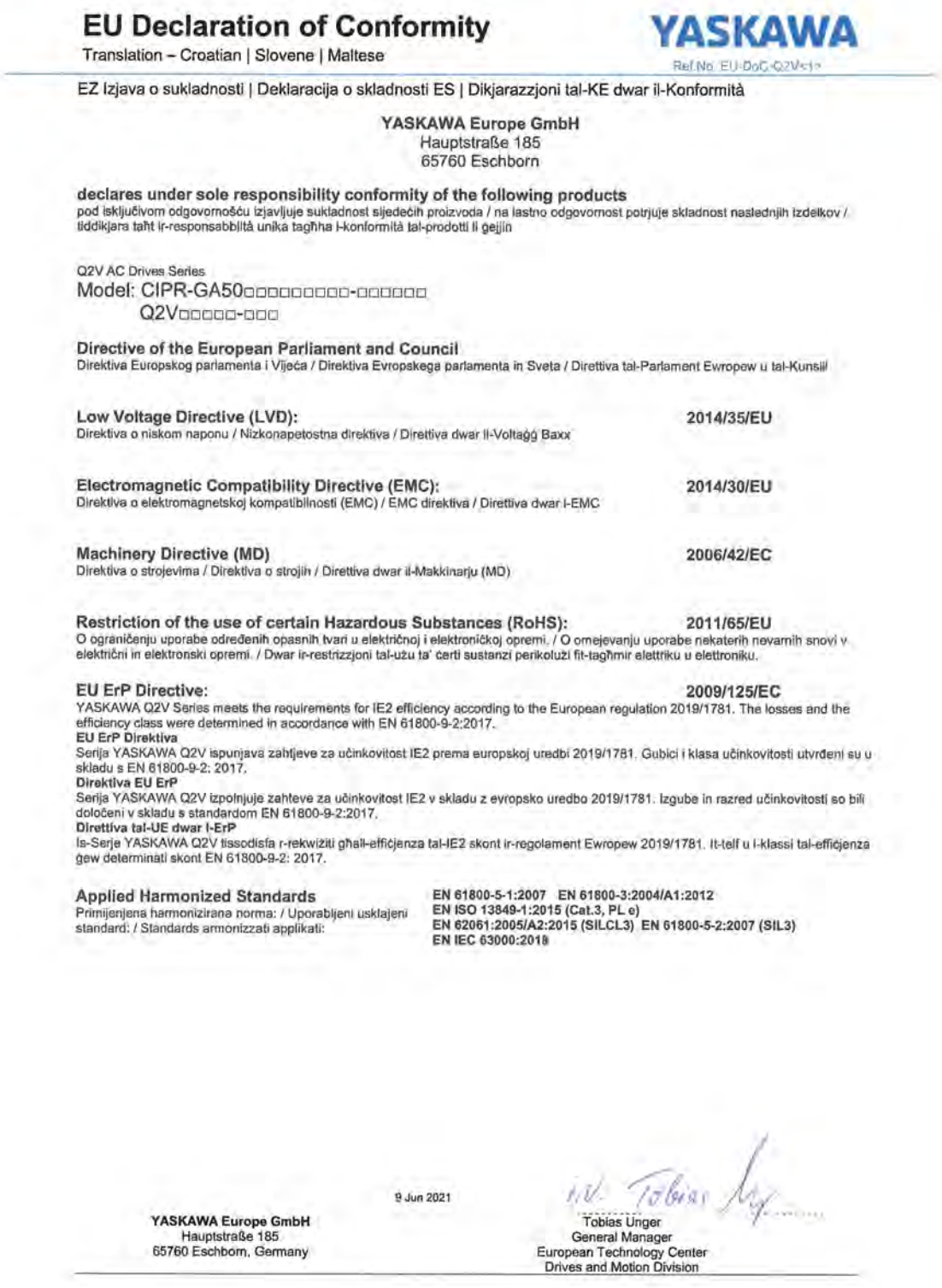

EU Declaration of Conformity

YASKAWA

Translation – Croatian | Slovene | Maltese

Ref.No. EU-DoC-Q2V<1>

EZ Izjava o sukladnosti | Deklaracija o skladnosti ES | Dikjarazzjoni tal-KE dwar il-Konformità

YASKAWA Europe GmbH
Hauptstraße 185
65760 Eschborn

declares under sole responsibility conformity of the following products
pod isključivom odgovornošću izjavljuje sukladnost sljedećih proizvoda / na lastno odgovornost potrjuje skladnost naslednjih izdelkov / tiddikjara taħt ir-responsabbiltà unika tagħha l-konformità tal-prodotti li ġejjin

Q2V AC Drives Series
Model: CIPR-GA50□□□□□□□□□-□□□□□□
Q2V□□□□□-□□□

Directive of the European Parliament and Council
Direktiva Europskog parlamenta i Vijeća / Direktiva Evropskega parlamenta in Sveta / Direttiva tal-Parlament Ewropew u tal-Kunsill

Low Voltage Directive (LVD): **2014/35/EU**
Direktiva o niskom naponu / Nizkonapetostna direktiva / Direttiva dwar il-Voltaġġ Baxx

Electromagnetic Compatibility Directive (EMC): **2014/30/EU**
Direktiva o elektromagnetskoj kompatibilnosti (EMC) / EMC direktiva / Direttiva dwar l-EMC

Machinery Directive (MD) **2006/42/EC**
Direktiva o strojevima / Direktiva o strojih / Direttiva dwar il-Makkinarju (MD)

Restriction of the use of certain Hazardous Substances (RoHS): **2011/65/EU**
O ograničenju uporabe određenih opasnih tvari u električnoj i elektroničkoj opremi. / O omejevanju uporabe nekaterih nevarnih snovi v električni in elektronski opremi. / Dwar ir-restrizzjoni tal-użu ta' ċerti sustanzi perikolużi fit-tagħmir elettriku u elettroniku.

EU ErP Directive: **2009/125/EC**
YASKAWA Q2V Series meets the requirements for IE2 efficiency according to the European regulation 2019/1781. The losses and the efficiency class were determined in accordance with EN 61800-9-2:2017.
EU ErP Direktiva
Serija YASKAWA Q2V ispunjava zahtjeve za učinkovitost IE2 prema europskoj uredbi 2019/1781. Gubici i klasa učinkovitosti utvrđeni su u skladu s EN 61800-9-2: 2017.
Direktiva EU ErP
Serija YASKAWA Q2V izpolnjuje zahteve za učinkovitost IE2 v skladu z evropsko uredbo 2019/1781. Izgube in razred učinkovitosti so bili določeni v skladu s standardom EN 61800-9-2:2017.
Direttiva tal-UE dwar l-ErP
Is-Serje YASKAWA Q2V tissodisfa r-rekwiżiti għall-effiċjenza tal-IE2 skont ir-regolament Ewropew 2019/1781. It-telf u l-klassi tal-effiċjenza ġew determinati skont EN 61800-9-2: 2017.

Applied Harmonized Standards
Primijenjena harmonizirana norma: / Uporabljeni usklajeni standard: / Standards armonizzati applikati:

EN 61800-5-1:2007 EN 61800-3:2004/A1:2012
EN ISO 13849-1:2015 (Cat.3, PL e)
EN 62061:2005/A2:2015 (SILCL3) EN 61800-5-2:2007 (SIL3)
EN IEC 63000:2018

9 Jun 2021

YASKAWA Europe GmbH
Hauptstraße 185
65760 Eschborn, Germany

i.V. Tobias Unger

Tobias Unger
General Manager
European Technology Center
Drives and Motion Division

◆ CE Low Voltage Directive Compliance

This product is tested according to IEC/EN 61800-5-1:2007 and complies with the CE Low Voltage Directive.

The following conditions must be satisfied for machines and devices incorporating this product to comply with the CE Low Voltage Directive.

■ Area of Use

Install this product in a location with Overvoltage Category III and pollution degree 2 or less as specified in IEC/CE 60664.

■ Guarding Against Debris

When you install IP20/UL Open type drives, use an enclosure that does not let unwanted material enter the drive from above or below.

■ Wiring Diagram

Example of a drive that is wired to comply with the CE Low Voltage Directive.

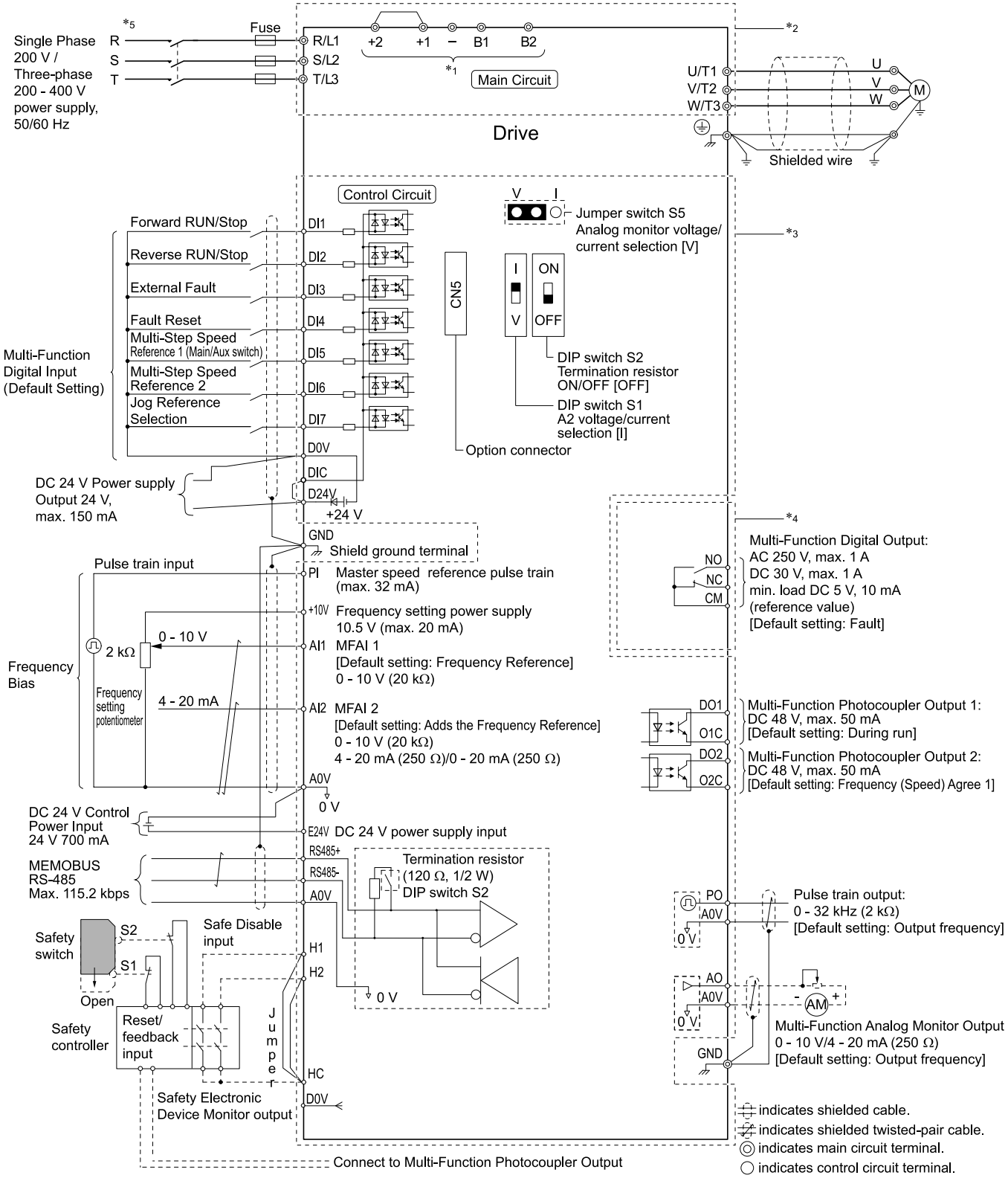

Figure 5.2 Wiring Diagram for CE Low Voltage Directive Compliance

*1 Use terminals -, +1, +2, B1, and B2 to connect options to the drive.

WARNING! *Fire Hazard. Only connect factory-recommended devices or circuits to drive terminals B1, B2, -, +1, +2, and +3 terminals. Do not connect AC power to these terminals. Incorrect wiring can cause damage to the drive and serious injury or death from fire.*

*2 For circuit protection, the main circuit is separated from the surface case that can touch the main circuit.

*3 The control circuit is a Safety Extra-Low Voltage circuit. Separate this circuit from other circuits with reinforced insulation. Make sure that the Safety Extra-Low Voltage circuit is connected as specified.

*4 Reinforced insulation separates the output terminals from other circuits. Users can also connect circuits that are not Safety Extra-Low Voltage circuits if the drive output is 250 Vac 1 A maximum or 30 Vdc 1 A maximum.

*5 Set *L8-05 = 1 [In PhaseLoss Selection = Enabled]* or set the wiring sequence to prevent input phase loss.

■ Main Circuit Wire Gauges and Tightening Torques (CE-compliance)

WARNING! *Electrical Shock Hazard. Make sure that the protective ground wire complies with technical standards and local safety regulations. The EN 61800-5-1: 2007 standard specifies that users must wire the power supply to automatically turn off when the protective ground wire disconnects. If you turn on the internal EMC filter, the leakage current of the drive will be more than 3.5 mA. You can also connect a protective ground wire that has a minimum cross-sectional area of 10 mm ^{2} (copper wire). If you do not obey the standards and regulations, it can cause serious injury or death.*

WARNING! *Electrical Shock Hazard. Only connect peripheral options, for example a DC reactor or braking resistor, to terminals +1, +2, -, B1, and B2. Failure to obey can cause serious injury or death.*

Note:

- The recommended wire gauges are based on drive continuous current ratings with 75 °C (167 °F) 600 V class 2 heat-resistant indoor PVC wire. Assume these conditions:
  - Ambient temperature: 40 °C (104 °F) maximum
  - Wiring distance: 100 m (3281 ft) maximum
  - Normal Duty rated current value
- Refer to the instruction manual for each device for recommended wire gauges to connect peripheral devices or options to terminals +1, +2, -, B1, and B2. Contact the manufacturer or your nearest sales representative if the recommended wire gauges for the peripheral devices or options are out of the range of the applicable gauges for the drive.

Three-Phase 200 V Class (CE-compliance)

Model	Terminal	Recommended Gauge mm^2	Applicable Gauge mm^2	Wire Stripping Length *1 mm	Terminal Screw	Tightening Torque N·m (in·lb)
2001	R/L1, S/L2, T/L3	2.5	2.5	6.5	M3 ⊖	0.5 - 0.6 (4.4 - 5.3)
	U/T1, V/T2, W/T3	2.5	2.5	6.5	M3 ⊖	0.5 - 0.6 (4.4 - 5.3)
	-, +1, +2	2.5	2.5	6.5	M3 ⊖	0.5 - 0.6 (4.4 - 5.3)
	B1, B2	2.5	2.5	6.5	M3 ⊖	0.5 - 0.6 (4.4 - 5.3)
	⏚	2.5 *2	2.5 *2	-	M3.5 ⊕	0.8 - 1.0 (7.1 - 8.9)
2002	R/L1, S/L2, T/L3	2.5	2.5	6.5	M3 ⊖	0.5 - 0.6 (4.4 - 5.3)
	U/T1, V/T2, W/T3	2.5	2.5	6.5	M3 ⊖	0.5 - 0.6 (4.4 - 5.3)
	-, +1, +2	2.5	2.5	6.5	M3 ⊖	0.5 - 0.6 (4.4 - 5.3)
	B1, B2	2.5	2.5	6.5	M3 ⊖	0.5 - 0.6 (4.4 - 5.3)
	⏚	2.5 *2	2.5 *2	-	M3.5 ⊕	0.8 - 1.0 (7.1 - 8.9)
2004	R/L1, S/L2, T/L3	2.5	2.5	6.5	M3 ⊖	0.5 - 0.6 (4.4 - 5.3)
	U/T1, V/T2, W/T3	2.5	2.5	6.5	M3 ⊖	0.5 - 0.6 (4.4 - 5.3)
	-, +1, +2	2.5	2.5	6.5	M3 ⊖	0.5 - 0.6 (4.4 - 5.3)
	B1, B2	2.5	2.5	6.5	M3 ⊖	0.5 - 0.6 (4.4 - 5.3)
	⏚	2.5 *2	2.5 *2	-	M3.5 ⊕	0.8 - 1.0 (7.1 - 8.9)

Model	Terminal	Recommended Gauge mm²	Applicable Gauge mm²	Wire Stripping Length *1 mm	Terminal Screw	Tightening Torque N·m (in·lb)
2006	R/L1, S/L2, T/L3	2.5	2.5	6.5	M3 ⊖	0.5 - 0.6 (4.4 - 5.3)
	U/T1, V/T2, W/T3	2.5	2.5	6.5	M3 ⊖	0.5 - 0.6 (4.4 - 5.3)
	-, +1, +2	2.5	2.5	6.5	M3 ⊖	0.5 - 0.6 (4.4 - 5.3)
	B1, B2	2.5	2.5	6.5	M3 ⊖	0.5 - 0.6 (4.4 - 5.3)
	⏚	2.5 *2	2.5 *2	-	M3.5 ⊕	0.8 - 1.0 (7.1 - 8.9)
2008	R/L1, S/L2, T/L3	2.5	2.5 - 4	8	M3 ⊖	0.5 - 0.6 (4.4 - 5.3)
	U/T1, V/T2, W/T3	2.5	2.5 - 4	8	M3 ⊖	0.5 - 0.6 (4.4 - 5.3)
	-, +1, +2	2.5	2.5 - 4	8	M3 ⊖	0.5 - 0.6 (4.4 - 5.3)
	B1, B2	2.5	2.5 - 4	8	M3 ⊖	0.5 - 0.6 (4.4 - 5.3)
	⏚	4 *2	2.5 - 6 *2	-	M4 ⊕	1.2 - 1.5 (10.6 - 13.3)
2010	R/L1, S/L2, T/L3	2.5	2.5 - 4	8	M3 ⊖	0.5 - 0.6 (4.4 - 5.3)
	U/T1, V/T2, W/T3	2.5	2.5 - 4	8	M3 ⊖	0.5 - 0.6 (4.4 - 5.3)
	-, +1, +2	2.5	2.5 - 4	8	M3 ⊖	0.5 - 0.6 (4.4 - 5.3)
	B1, B2	2.5	2.5 - 4	8	M3 ⊖	0.5 - 0.6 (4.4 - 5.3)
	⏚	4 *2	2.5 - 6 *2	-	M4 ⊕	1.2 - 1.5 (10.6 - 13.3)
2012	R/L1, S/L2, T/L3	2.5	2.5 - 4	8	M3 ⊖	0.5 - 0.6 (4.4 - 5.3)
	U/T1, V/T2, W/T3	2.5	2.5 - 4	8	M3 ⊖	0.5 - 0.6 (4.4 - 5.3)
	-, +1, +2	2.5	2.5 - 4	8	M3 ⊖	0.5 - 0.6 (4.4 - 5.3)
	B1, B2	2.5	2.5 - 4	8	M3 ⊖	0.5 - 0.6 (4.4 - 5.3)
	⏚	4 *2	2.5 - 6 *2	-	M4 ⊕	1.2 - 1.5 (10.6 - 13.3)
2018	R/L1, S/L2, T/L3	2.5	2.5 - 4	10	M4 ⊖	1.5 - 1.7 (13.5 - 15)
	U/T1, V/T2, W/T3	2.5	2.5 - 4	10	M4 ⊖	1.5 - 1.7 (13.5 - 15)
	-, +1, +2	4	2.5 - 6	10	M4 ⊖	1.5 - 1.7 (13.5 - 15)
	B1, B2	2.5	2.5 - 4	10	M4 ⊖	1.5 - 1.7 (13.5 - 15)
	⏚	6 *2	2.5 - 6 *2	-	M4 ⊕	1.2 - 1.5 (10.6 - 13.3)

Model	Terminal	Recommended Gauge mm²	Applicable Gauge mm²	Wire Stripping Length *1 mm	Terminal Screw	Tightening Torque N·m (in·lb)
2021	R/L1, S/L2, T/L3	4	2.5 - 6	10	M4 ⊖	1.5 - 1.7 (13.5 - 15)
	U/T1, V/T2, W/T3	2.5	2.5 - 4	10	M4 ⊖	1.5 - 1.7 (13.5 - 15)
	-, +1, +2	6	4 - 10	10	M4 ⊖	1.5 - 1.7 (13.5 - 15)
	B1, B2	2.5	2.5 - 4	10	M4 ⊖	1.5 - 1.7 (13.5 - 15)
	⏚	6 *2	2.5 - 6 *2	-	M4 ⊕	1.2 - 1.5 (10.6 - 13.3)
2030	R/L1, S/L2, T/L3	6	4 - 10	10	M4 ⊖	1.5 - 1.7 (13.5 - 15)
	U/T1, V/T2, W/T3	6	4 - 10	10	M4 ⊖	1.5 - 1.7 (13.5 - 15)
	-, +1, +2	10	2.5 - 16	10	M4 ⊖	1.5 - 1.7 (13.5 - 15)
	B1, B2	2.5	2.5 - 4	10	M4 ⊖	1.5 - 1.7 (13.5 - 15)
	⏚	6 *2	6 - 16	-	M5 ⊕	2.0 - 2.5 (17.7 - 22.1)
2042	R/L1, S/L2, T/L3	10	2.5 - 16	10	M4 ⊖	1.5 - 1.7 (13.5 - 15)
	U/T1, V/T2, W/T3	10	2.5 - 16	10	M4 ⊖	1.5 - 1.7 (13.5 - 15)
	-, +1, +2	16	4 - 25	18	M5 ⊖	2.3 - 2.5 (19.8 - 22)
	B1, B2	4	2.5 - 6	10	M4 ⊖	1.5 - 1.7 (13.5 - 15)
	⏚	10	6 - 16	-	M5 ⊕	2.0 - 2.5 (17.7 - 22.1)
2056	R/L1, S/L2, T/L3	16	4 - 25	18	M5 ⊖	2.3 - 2.5 (19.8 - 22)
	U/T1, V/T2, W/T3	16	4 - 25	18	M5 ⊖	2.3 - 2.5 (19.8 - 22)
	-, +1, +2	25	6 - 35	18	M5 ⊖	• ≤ 25 mm² 2.3 - 2.5 (19.8 - 22) • 35 mm² ≤ 4.1 - 4.5 (36 - 40)
	B1, B2	10	4 - 16	10	M4 ⊖	1.5 - 1.7 (13.5 - 15)
	⏚	10	10 - 25	-	M6 ⊕	5.4 - 6.0 (47.8 - 53.1)
2070	R/L1, S/L2, T/L3	25	6 - 35	20	M6 ⑤	5 - 5.5 (45 - 49)
	U/T1, V/T2, W/T3	16	6 - 25	20	M6 ⑤	5 - 5.5 (45 - 49)
	-, +1, +2	35	10 - 50	20	M6 ⑤	5 - 5.5 (45 - 49)
	B1, B2	10	4 - 16	10	M4 ⊖	1.5 - 1.7 (13.5 - 15)
	⏚	16	10 - 25	-	M6 ⊕	5.4 - 6.0 (47.8 - 53.1)

Model	Terminal	Recommended Gauge mm²	Applicable Gauge mm²	Wire Stripping Length *1 mm	Terminal Screw	Tightening Torque N·m (in·lb)
2082	R/L1, S/L2, T/L3	35	10 - 50	20	M6 ⑤	5 - 5.5 (45 - 49)
	U/T1, V/T2, W/T3	25	10 - 35	20	M6 ⑤	5 - 5.5 (45 - 49)
	-, +1, +2	50	16 - 70	20	M6 ⑤	5 - 5.5 (45 - 49)
	B1, B2	16	4 - 16	10	M4 ⊖	1.5 - 1.7 (13.5 - 15)
	⏚	16	10 - 25	-	M6 ⊕	5.4 - 6.0 (47.8 - 53.1)

*1 Remove insulation from the ends of wires to expose the length of wire shown.

*2 If you turn on the internal EMC filter, the leakage current of the drive will be more than 3.5 mA. Use these closed-loop crimp terminals or equivalent to connect a protective ground wire that has a minimum cross-sectional area of 10 mm² (copper wire).

- 8-4NS from JST Mfg. Co., Ltd.
- R8-4S from NICHIFU Co.,Ltd.

Single-Phase 200 V Class (CE-compliance)

Model	Terminal	Recommended Gauge mm²	Applicable Gauge mm²	Wire Stripping Length *1 mm	Terminal Screw	Tightening Torque N·m (in·lb)
B001	L/L1, N/L2	2.5	2.5	6.5	M3 ⊖	0.5 - 0.6 (4.4 - 5.3)
	U/T1, V/T2, W/T3	2.5	2.5	6.5	M3 ⊖	0.5 - 0.6 (4.4 - 5.3)
	-, +1	2.5	2.5	6.5	M3 ⊖	0.5 - 0.6 (4.4 - 5.3)
	B1, B2	2.5	2.5	6.5	M3 ⊖	0.5 - 0.6 (4.4 - 5.3)
	⏚	2.5 *2	2.5 *2	-	M3.5 ⊕	0.8 - 1.0 (7.1 - 8.9)
B002	L/L1, N/L2	2.5	2.5	6.5	M3 ⊖	0.5 - 0.6 (4.4 - 5.3)
	U/T1, V/T2, W/T3	2.5	2.5	6.5	M3 ⊖	0.5 - 0.6 (4.4 - 5.3)
	-, +1	2.5	2.5	6.5	M3 ⊖	0.5 - 0.6 (4.4 - 5.3)
	B1, B2	2.5	2.5	6.5	M3 ⊖	0.5 - 0.6 (4.4 - 5.3)
	⏚	2.5 *2	2.5 *2	-	M3.5 ⊕	0.8 - 1.0 (7.1 - 8.9)
B004	L/L1, N/L2	2.5	2.5	6.5	M3 ⊖	0.5 - 0.6 (4.4 - 5.3)
	U/T1, V/T2, W/T3	2.5	2.5	6.5	M3 ⊖	0.5 - 0.6 (4.4 - 5.3)
	-, +1	2.5	2.5	6.5	M3 ⊖	0.5 - 0.6 (4.4 - 5.3)
	B1, B2	2.5	2.5	6.5	M3 ⊖	0.5 - 0.6 (4.4 - 5.3)
	⏚	2.5 *2	2.5 *2	-	M3.5 ⊕	0.8 - 1.0 (7.1 - 8.9)

Model	Terminal	Recommended Gauge mm²	Applicable Gauge mm²	Wire Stripping Length *1 mm	Terminal Screw	Tightening Torque N·m (in·lb)
B006	L/L1, N/L2	2.5	2.5 - 4	8	M3 ⊖	0.5 - 0.6 (4.4 - 5.3)
	U/T1, V/T2, W/T3	2.5	2.5 - 4	8	M3 ⊖	0.5 - 0.6 (4.4 - 5.3)
	-, +1	2.5	2.5 - 4	8	M3 ⊖	0.5 - 0.6 (4.4 - 5.3)
	B1, B2	2.5	2.5 - 4	8	M3 ⊖	0.5 - 0.6 (4.4 - 5.3)
	⏚	2.5 *2	2.5 - 6 *2	-	M4 ⊕	1.2 - 1.5 (10.6 - 13.3)
B010	L/L1, N/L2	2.5	2.5 - 4	8	M3 ⊖	0.5 - 0.6 (4.4 - 5.3)
	U/T1, V/T2, W/T3	2.5	2.5 - 4	8	M3 ⊖	0.5 - 0.6 (4.4 - 5.3)
	-, +1	2.5	2.5 - 4	8	M3 ⊖	0.5 - 0.6 (4.4 - 5.3)
	B1, B2	2.5	2.5 - 4	8	M3 ⊖	0.5 - 0.6 (4.4 - 5.3)
	⏚	2.5 *2	2.5 - 6 *2	-	M4 ⊕	1.2 - 1.5 (10.6 - 13.3)
B012	L/L1, N/L2	4	2.5 - 6	10	M4 ⊖	1.5 - 1.7 (13.5 - 15)
	U/T1, V/T2, W/T3	2.5	2.5 - 4	10	M4 ⊖	1.5 - 1.7 (13.5 - 15)
	-, +1	4	2.5 - 6	10	M4 ⊖	1.5 - 1.7 (13.5 - 15)
	B1, B2	2.5	2.5 - 4	10	M4 ⊖	1.5 - 1.7 (13.5 - 15)
	⏚	4 *2	2.5 - 6 *2	-	M4 ⊕	1.2 - 1.5 (10.6 - 13.3)
B018	L/L1, N/L2	6	2.5 - 10	10	M4 ⊖	1.5 - 1.7 (13.5 - 15)
	U/T1, V/T2, W/T3	2.5	2.5 - 4	10	M4 ⊖	1.5 - 1.7 (13.5 - 15)
	-, +1	6	2.5 - 10	10	M4 ⊖	1.5 - 1.7 (13.5 - 15)
	B1, B2	2.5	2.5 - 4	10	M4 ⊖	1.5 - 1.7 (13.5 - 15)
	⏚	6 *2	4 - 10 *2	-	M5 ⊕	2.0 - 2.5 (17.7 - 22.1)

*1 Remove insulation from the ends of wires to expose the length of wire shown.

*2 If you turn on the internal EMC filter, the leakage current of the drive will be more than 3.5 mA. Use these closed-loop crimp terminals or equivalent to connect a protective ground wire that has a minimum cross-sectional area of 10 mm² (copper wire).

- 8-4NS from JST Mfg. Co., Ltd.
- R8-4S from NICHIFU Co.,Ltd.

Three-Phase 400 V Class (CE-compliance)

Model	Terminal	Recommended Gauge mm²	Applicable Gauge mm²	Wire Stripping Length *1 mm	Terminal Screw	Tightening Torque N·m (in·lb)
4001	R/L1, S/L2, T/L3	2.5	2.5 - 4	8	M3 ⊖	0.5 - 0.6 (4.4 - 5.3)
	U/T1, V/T2, W/T3	2.5	2.5 - 4	8	M3 ⊖	0.5 - 0.6 (4.4 - 5.3)
	-, +1, +2	2.5	2.5 - 4	8	M3 ⊖	0.5 - 0.6 (4.4 - 5.3)
	B1, B2	2.5	2.5 - 4	8	M3 ⊖	0.5 - 0.6 (4.4 - 5.3)
	⏚	2.5 *2	2.5 - 6 *2	-	M4 ⊕	1.2 - 1.5 (10.6 - 13.3)
4002	R/L1, S/L2, T/L3	2.5	2.5 - 4	8	M3 ⊖	0.5 - 0.6 (4.4 - 5.3)
	U/T1, V/T2, W/T3	2.5	2.5 - 4	8	M3 ⊖	0.5 - 0.6 (4.4 - 5.3)
	-, +1, +2	2.5	2.5 - 4	8	M3 ⊖	0.5 - 0.6 (4.4 - 5.3)
	B1, B2	2.5	2.5 - 4	8	M3 ⊖	0.5 - 0.6 (4.4 - 5.3)
	⏚	2.5 *2	2.5 - 6 *2	-	M4 ⊕	1.2 - 1.5 (10.6 - 13.3)
4004	R/L1, S/L2, T/L3	2.5	2.5 - 4	8	M3 ⊖	0.5 - 0.6 (4.4 - 5.3)
	U/T1, V/T2, W/T3	2.5	2.5 - 4	8	M3 ⊖	0.5 - 0.6 (4.4 - 5.3)
	-, +1, +2	2.5	2.5 - 4	8	M3 ⊖	0.5 - 0.6 (4.4 - 5.3)
	B1, B2	2.5	2.5 - 4	8	M3 ⊖	0.5 - 0.6 (4.4 - 5.3)
	⏚	4 *2	2.5 - 6 *2	-	M4 ⊕	1.2 - 1.5 (10.6 - 13.3)
4005	R/L1, S/L2, T/L3	2.5	2.5 - 4	8	M3 ⊖	0.5 - 0.6 (4.4 - 5.3)
	U/T1, V/T2, W/T3	2.5	2.5 - 4	8	M3 ⊖	0.5 - 0.6 (4.4 - 5.3)
	-, +1, +2	2.5	2.5 - 4	8	M3 ⊖	0.5 - 0.6 (4.4 - 5.3)
	B1, B2	2.5	2.5 - 4	8	M3 ⊖	0.5 - 0.6 (4.4 - 5.3)
	⏚	4 *2	2.5 - 6 *2	-	M4 ⊕	1.2 - 1.5 (10.6 - 13.3)
4007	R/L1, S/L2, T/L3	2.5	2.5 - 4	8	M3 ⊖	0.5 - 0.6 (4.4 - 5.3)
	U/T1, V/T2, W/T3	2.5	2.5 - 4	8	M3 ⊖	0.5 - 0.6 (4.4 - 5.3)
	-, +1, +2	2.5	2.5 - 4	8	M3 ⊖	0.5 - 0.6 (4.4 - 5.3)
	B1, B2	2.5	2.5 - 4	8	M3 ⊖	0.5 - 0.6 (4.4 - 5.3)
	⏚	4 *2	2.5 - 6 *2	-	M4 ⊕	1.2 - 1.5 (10.6 - 13.3)

Model	Terminal	Recommended Gauge mm²	Applicable Gauge mm²	Wire Stripping Length *1 mm	Terminal Screw	Tightening Torque N·m (in·lb)
4009	R/L1, S/L2, T/L3	2.5	2.5 - 4	8	M3 ⊖	0.5 - 0.6 (4.4 - 5.3)
	U/T1, V/T2, W/T3	2.5	2.5 - 4	8	M3 ⊖	0.5 - 0.6 (4.4 - 5.3)
	-, +1, +2	2.5	2.5 - 4	8	M3 ⊖	0.5 - 0.6 (4.4 - 5.3)
	B1, B2	2.5	2.5 - 4	8	M3 ⊖	0.5 - 0.6 (4.4 - 5.3)
	⏚	4 *2	2.5 - 6 *2	-	M4 ⊕	1.2 - 1.5 (10.6 - 13.3)
4012	R/L1, S/L2, T/L3	2.5	2.5 - 4	10	M4 ⊖	1.5 - 1.7 (13.5 - 15)
	U/T1, V/T2, W/T3	2.5	2.5 - 4	10	M4 ⊖	1.5 - 1.7 (13.5 - 15)
	-, +1, +2	2.5	2.5 - 4	10	M4 ⊖	1.5 - 1.7 (13.5 - 15)
	B1, B2	2.5	2.5 - 4	10	M4 ⊖	1.5 - 1.7 (13.5 - 15)
	⏚	4 *2	2.5 - 6 *2	-	M4 ⊕	1.2 - 1.5 (10.6 - 13.3)
4018	R/L1, S/L2, T/L3	2.5	2.5 - 4	10	M4 ⊖	1.5 - 1.7 (13.5 - 15)
	U/T1, V/T2, W/T3	2.5	2.5 - 4	10	M4 ⊖	1.5 - 1.7 (13.5 - 15)
	-, +1, +2	4	2.5 - 6	10	M4 ⊖	1.5 - 1.7 (13.5 - 15)
	B1, B2	2.5	2.5 - 4	10	M4 ⊖	1.5 - 1.7 (13.5 - 15)
	⏚	4 *2	2.5 - 16	-	M5 ⊕	2.0 - 2.5 (17.7 - 22.1)
4023	R/L1, S/L2, T/L3	4	2.5 - 6	10	M4 ⊖	1.5 - 1.7 (13.5 - 15)
	U/T1, V/T2, W/T3	4	2.5 - 6	10	M4 ⊖	1.5 - 1.7 (13.5 - 15)
	-, +1, +2	4	4 - 6	10	M4 ⊖	1.5 - 1.7 (13.5 - 15)
	B1, B2	2.5	2.5 - 4	10	M4 ⊖	1.5 - 1.7 (13.5 - 15)
	⏚	4 *2	4 - 16	-	M5 ⊕	2.0 - 2.5 (17.7 - 22.1)
4031	R/L1, S/L2, T/L3	6	4 - 10	10	M4 ⊖	1.5 - 1.7 (13.5 - 15)
	U/T1, V/T2, W/T3	6	4 - 10	10	M4 ⊖	1.5 - 1.7 (13.5 - 15)
	-, +1, +2	10	2.5 - 16	18	M5 ⊖	2.3 - 2.5 (19.8 - 22)
	B1, B2	2.5	2.5 - 4	10	M4 ⊖	1.5 - 1.7 (13.5 - 15)
	⏚	6 *2	6 - 16 *2	-	M6 ⊕	5.4 - 6.0 (47.8 - 53.1)

Model	Terminal	Recommended Gauge mm²	Applicable Gauge mm²	Wire Stripping Length *1 mm	Terminal Screw	Tightening Torque N·m (in·lb)
4038	R/L1, S/L2, T/L3	10	4 - 16	10	M4 ⊖	1.5 - 1.7 (13.5 - 15)
	U/T1, V/T2, W/T3	6	2.5 - 10	10	M4 ⊖	1.5 - 1.7 (13.5 - 15)
	-, +1, +2	16	4 - 25	18	M5 ⊖	2.3 - 2.5 (19.8 - 22)
	B1, B2	4	2.5 - 6	10	M4 ⊖	1.5 - 1.7 (13.5 - 15)
	⏚	10	6 - 16	-	M6 ⊕	5.4 - 6.0 (47.8 - 53.1)
4044	R/L1, S/L2, T/L3	16	4 - 25	18	M5 ⊖	2.3 - 2.5 (19.8 - 22)
	U/T1, V/T2, W/T3	10	4 - 16	18	M5 ⊖	2.3 - 2.5 (19.8 - 22)
	-, +1, +2	16	6 - 25	18	M5 ⊖	2.3 - 2.5 (19.8 - 22)
	B1, B2	6	4 - 10	10	M4 ⊖	1.5 - 1.7 (13.5 - 15)
	⏚	10	6 - 16	-	M6 ⊕	5.4 - 6.0 (47.8 - 53.1)
4060	R/L1, S/L2, T/L3	25	6 - 35	18	M5 ⊖	• ≤ 25 mm² 2.3 - 2.5 (19.8 - 22) • 35 mm² ≤ 4.1 - 4.5 (36 - 40)
	U/T1, V/T2, W/T3	16	4 - 25	18	M5 ⊖	2.3 - 2.5 (19.8 - 22)
	-, +1, +2	25	6 - 35	18	M5 ⊖	• ≤ 25 mm² 2.3 - 2.5 (19.8 - 22) • 35 mm² ≤ 4.1 - 4.5 (36 - 40)
	B1, B2	10	2.5 - 16	10	M4 ⊖	1.5 - 1.7 (13.5 - 15)
	⏚	10	6 - 16	-	M6 ⊕	5.4 - 6.0 (47.8 - 53.1)

*1 Remove insulation from the ends of wires to expose the length of wire shown.

*2 If you turn on the internal EMC filter, the leakage current of the drive will be more than 3.5 mA. Use these closed-loop crimp terminals or equivalent to connect a protective ground wire that has a minimum cross-sectional area of 10 mm² (copper wire).

- 8-4NS from JST Mfg. Co., Ltd.
- R8-4S from NICHIFU Co.,Ltd.

■ Connect a Fuse to the Input Side (Primary Side)

The drive circuit protection must comply with EN 61800-5-1:2007 for protection against a short circuit in the internal circuitry. Connect semiconductor protection fuses on the input side for branch circuit protection.

WARNING! *Electrical Shock Hazard. After the drive blows a fuse or trips an RCM/RCD, do not immediately energize the drive or operate peripheral devices. Wait for the time specified on the warning label at a minimum and make sure that all indicators are OFF. Then check the wiring and peripheral device ratings to find the cause of the problem. If you do not know the cause of the problem, contact the manufacturer before you energize the drive or peripheral devices. If you do not fix the problem before you operate the drive or peripheral devices, it can cause serious injury or death.*

Three-Phase 200 V Class

Table 5.2 Factory-Recommended Branch Circuit Protection: Three-Phase 200 V Class

Drive Model	Semiconductor Protection Fuse Rated Current Manufacturer: EATON/Bussmann
2001	FWH-25A14F
2002	FWH-25A14F
2004	FWH-25A14F

Drive Model	Semiconductor Protection Fuse Rated Current Manufacturer: EATON/Bussmann
2006	FWH-25A14F
2008	FWH-70B
2010	FWH-70B

Drive Model	Semiconductor Protection Fuse Rated Current Manufacturer: EATON/Bussmann
2012	FWH-70B
2018	FWH-90B
2021	FWH-90B
2030	FWH-100B

Drive Model	Semiconductor Protection Fuse Rated Current Manufacturer: EATON/Bussmann
2042	FWH-150B
2056	FWH-200B
2070	FWH-200B
2082	FWH-225A

Single-Phase 200 V Class

Table 5.3 Factory-Recommended Branch Circuit Protection: Single-Phase 200 V Class

Drive Model	Semiconductor Protection Fuse Rated Current Manufacturer: EATON/Bussmann
B001	FWH-25A14F
B002	FWH-25A14F
B004	FWH-60B
B006	FWH-80B

Drive Model	Semiconductor Protection Fuse Rated Current Manufacturer: EATON/Bussmann
B010	FWH-100B
B012	FWH-125B
B018	FWH-150B

Three-Phase 400 V Class

Table 5.4 Factory-Recommended Branch Circuit Protection: Three-Phase 400 V Class

Drive Model	Semiconductor Protection Fuse Rated Current Manufacturer: EATON/Bussmann
4001	FWH-40B
4002	FWH-40B
4004	FWH-50B
4005	FWH-70B
4007	FWH-70B
4009	FWH-90B
4012	FWH-90B

Drive Model	Semiconductor Protection Fuse Rated Current Manufacturer: EATON/Bussmann
4018	FWH-80B
4023	FWH-100B
4031	FWH-125B
4038	FWH-175B
4044	FWH-200B
4060	FWH-200B

■ CE Standards Compliance for DC Power Supply Input

To comply with CE Standards, install a fuse for the DC power supply input.

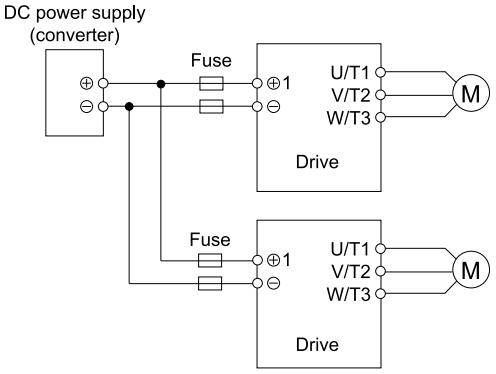

Two drives are connected in parallel.

Figure 5.3 Wiring Example for DC Power Supply Input

WARNING! *Electrical Shock Hazard. Do not ground the main circuit bus. Incorrect wiring can cause serious injury or death.*

Note:
- Install a fuse for each drive when operating more than one drive. If one fuse blows, replace all fuses.
- Install the external filter (system) to comply with the EMC Directive.

Table 5.5 Recommended Fuse: Three-Phase 200 V Class

Drive Model	Fuse Manufacturer: Bussmann
2001	FWH-25A14F
2002	FWH-25A14F

Drive Model	Fuse Manufacturer: Bussmann
2004	FWH-25A14F
2006	FWH-25A14F

Drive Model	Fuse Manufacturer: Bussmann
2008	FWH-70B
2010	FWH-70B
2012	FWH-70B
2018	FWH-90B
2021	FWH-90B

Drive Model	Fuse Manufacturer: Bussmann
2030	FWH-100B
2042	FWH-150B
2056	FWH-200B
2070	FWH-200B
2082	FWH-225A

Table 5.6 Recommended Fuse: Single-Phase 200 V Class

Drive Model	Fuse Manufacturer: Bussmann
B001	FWH-25A14F
B002	FWH-25A14F
B004	FWH-60B
B006	FWH-80B

Drive Model	Fuse Manufacturer: Bussmann
B010	FWH-100B
B012	FWH-125B
B018	FWH-150B

Table 5.7 Recommended Fuse: Three-Phase 400 V Class

Drive Model	Fuse Manufacturer: Bussmann
4001	FWH-40B
4002	FWH-40B
4004	FWH-50B
4005	FWH-70B
4007	FWH-70B
4009	FWH-90B
4012	FWH-90B

Drive Model	Fuse Manufacturer: Bussmann
4018	FWH-80B
4023	FWH-100B
4031	FWH-125B
4038	FWH-175B
4044	FWH-200B
4060	FWH-200B

◆ EMC Directive

Use drives with built-in EMC filters or install external EMC filters to the drive input side to comply with the EMC Directive. Drives with built-in EMC filters were tested in accordance with European standard EN 61800-3:2004/A1:2012, and comply with the EMC Directive.

■ Install a Drive to Conform to the EMC Directive

Install the drives with this procedure to comply with the EMC Directive when the drive is a single unit or installed in a larger device.

1. Install the drive on a grounded metal plate.
2. Wire the drive and motor.
3. Ground the wire shielding on the drive side and motor side.

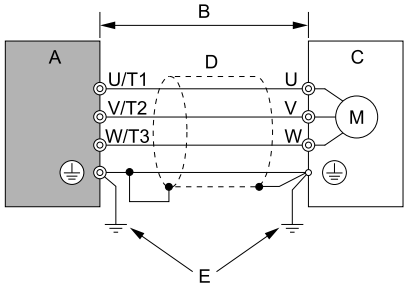

A - Drive
B - Maximum wiring length *1
C - Motor
D - Metal conduit
E - Grounding wire

Figure 5.4 Wiring the Drive and Motor

*1 Keep the wire as short as possible. The maximum wiring length between drive and motor is:
- Q2V-A4xxx-Axx: 20 m (65.6 ft.) maximum, Class C2
- Q2V-A2xxx-Axx: 20 m (65.6 ft.) maximum, Class C3
- Q2V-ABxxx-Axx: 10 m (32.8 ft.) maximum, Class C1

Note:
Use a braided shield cable for the drive and motor wiring or put the wires through a metal conduit.

4. Use a cable clamp to ground the motor cable to the metal plate.

Note:
Make sure that the protective ground wire complies with technical specifications or local safety standards.

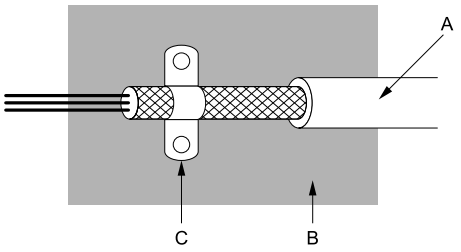

A - Braided shield cable
B - Metal plate
C - Cable clamp (conductive)

Figure 5.5 Ground the shield

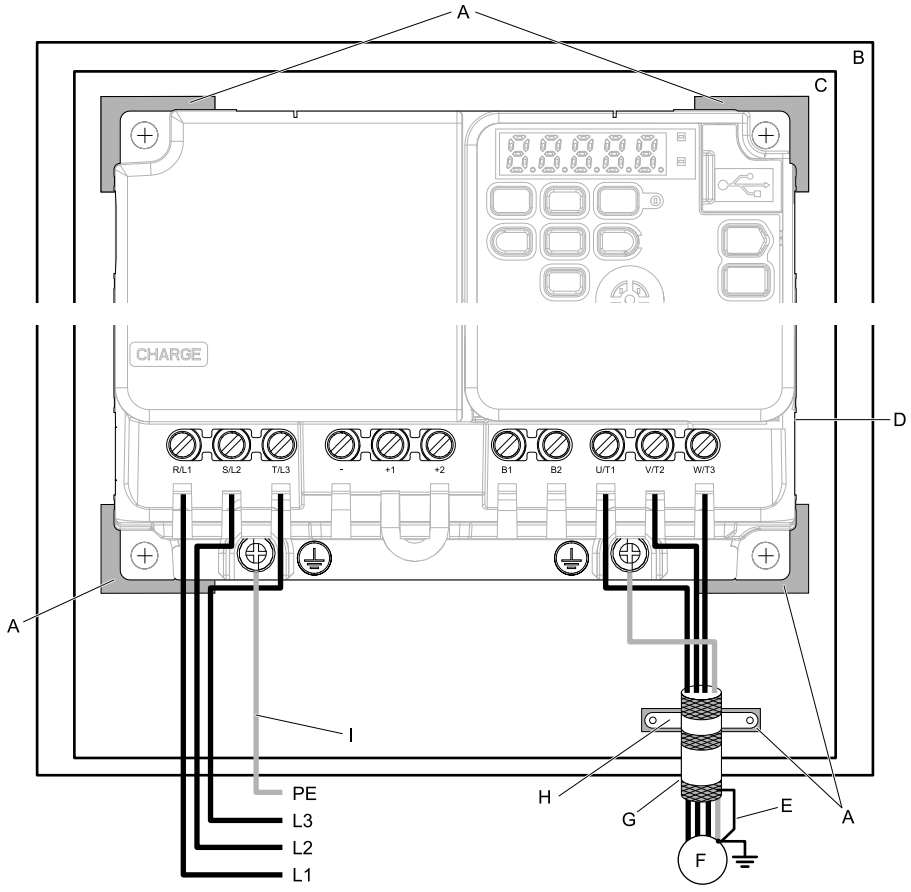

A - Grounding surface (Remove any paint or sealant.)
B - Enclosure panel
C - Metal plate
D - Drive
E - Shielded wire
F - Motor
G - Motor cable
H - Cable clamp
I - Grounding wire

Figure 5.6 Install a Drive with a Built-in EMC Filter

5. Connect an AC reactor or DC reactor to decrease harmonic distortion. Refer to *DC Reactor Selection on page 164* to select a DC reactor.

Note:
• To maintain compliance with EN 61000-3-2 on drive models 2001 to 2006, and 4001 to 4004, install a DC reactor.

Ground Wiring

WARNING! *Electrical Shock Hazard. Do not remove covers or touch circuit boards while the drive is energized. If you touch the internal components of an energized drive, it can cause serious injury or death.*

WARNING! *Electrical Shock Hazard. Ground the neutral point on the power supply of drive models 2xxxE, BxxxE, and 4xxxE to comply with the EMC Directive before you turn on the EMC filter or if there is high resistance grounding. If the EMC filter is switched ON without the neutral point being grounded or if there is high resistance grounding, it can cause death or serious injury.*

Enable the Internal EMC Filter

On drive models 2xxxE, BxxxE, and 4xxxE, move the screw or screws to turn ON and OFF (enable and disable) the EMC filter.

Make sure that the symmetric grounding network is applied, and install the screw or screws in the ON position to enable the built-in EMC filter in compliance with the EMC Directive. The EMC filter switch screw or screws are installed in the OFF position by default.

WARNING! *Electrical Shock Hazard. Disconnect all power to the drive, wait for the time specified on the warning label, and check the drive for dangerous voltages before you remove covers or touch EMC filter screws. If you touch the screws when there are dangerous voltages, it will cause serious injury or death.*

WARNING! *Electrical Shock Hazard. Do not remove covers or touch circuit boards while the drive is energized. If you touch the internal components of an energized drive, it can cause serious injury or death.*

WARNING! *Electrical Shock Hazard. Ground the neutral point on the power supply of drive models 2xxxE, BxxxE, and 4xxxE to comply with the EMC Directive before you turn on the EMC filter or if there is high resistance grounding. If the EMC filter is switched ON without the neutral point being grounded or if there is high resistance grounding, it can cause death or serious injury.*

WARNING! *Electrical Shock Hazard. Connect the ground cable correctly. If you touch electrical equipment that is not grounded, it can cause serious injury or death.*

NOTICE: *To disable the internal EMC filter, move the screws from ON to OFF and then tighten to the specified torque. If you fully remove the screws or tighten the screws to an incorrect torque, it can cause drive failure.*

NOTICE: *Move the EMC switch screw or screws to the OFF position for networks that are not symmetrically grounded. If the screws are not in the correct position, it can cause damage to the drive.*

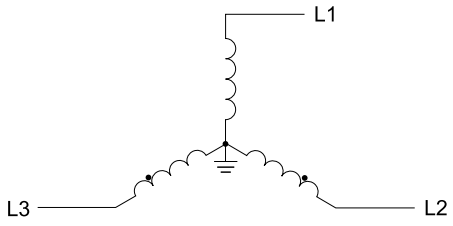

Figure 5.7 Symmetric Grounding

NOTICE: *When you use the drive with a non-grounding, high-resistance grounding, or asymmetric-grounding network, put the EMC Filter screw or screws in the OFF position to disable the built-in EMC filter. Failure to obey the instructions can damage the drive.*

Table 5.8 Asymmetric Grounding Networks

Type of Grounding	Diagram
Grounded at the corner of the delta connection	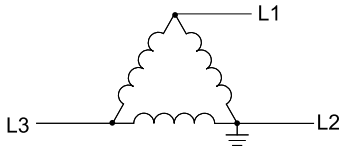
Grounded at the middle of the side	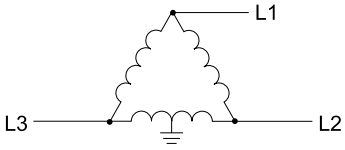

Type of Grounding	Diagram
Single-phase, grounded at the end point	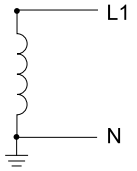
Three-phase variable transformer without solidly grounded neutral	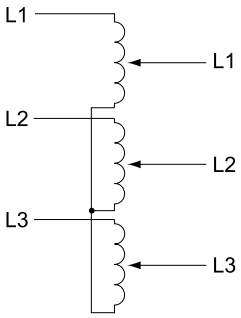

EMC Filter Switch Location

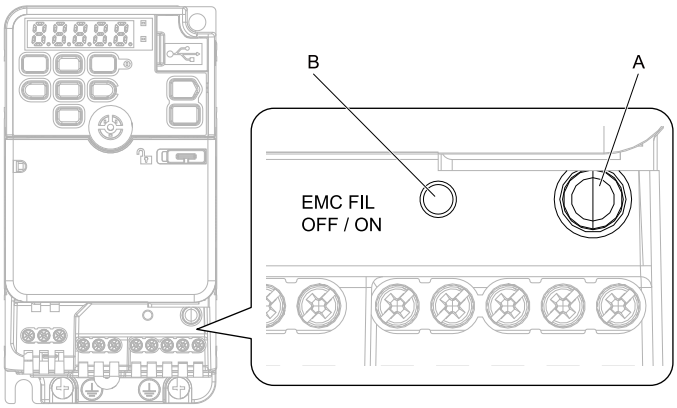

A - SW (ON) **B - SW (OFF)**

Figure 5.8 EMC Filter Switch Location (Models 2001E - 2006E, B001E - B004E)

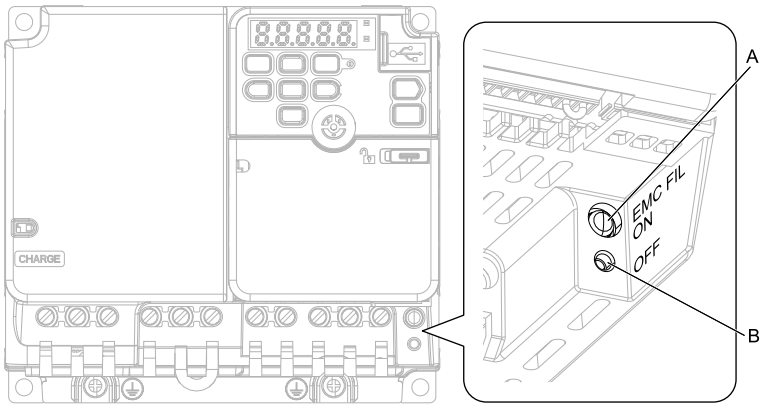

A - SW (ON) **B - SW (OFF)**

Figure 5.9 EMC Filter Switch Location (Models 2010E - 2021E, B006E - B012E, 4001E - 4012E)

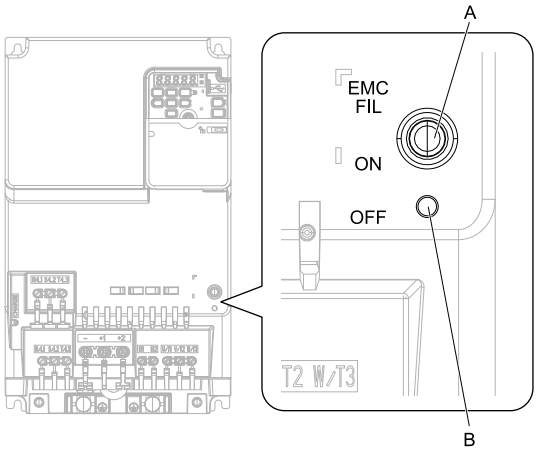

A - SW (ON) **B - SW (OFF)**

Figure 5.10 EMC Filter Switch Location (Models 2030E - 2082E, 4018E - 4060E)

NOTICE: *Only use the screws specified in this manual. If you use screws that are not approved, it can cause damage to the drive.*

EMC Filter Switch Screws

If you lose an EMC filter switch screw, use this information to find the correct replacement screw and install the new screw with the correct tightening torque.

Table 5.9 Screw Sizes and Tightening Torques

Model	Screw Size	Tightening Torque N·m (in·lb)
2001 - 2006 B001 - B004	M3 × 16	0.5 - 0.7 (4.4 - 6.2)
2010 - 2021 B006 - B012 4001 - 4012	M3 × 20	0.5 - 0.7 (4.4 - 6.2)
2030 - 2082 4018 - 4060	M4 × 20	1.0 - 1.3 (8.9 - 11.5)

■ Installing the External EMC Noise Filter

Drive models 2xxxA, BxxxA, and 4xxxA must meet conditions in this section to comply with EN 61800-3.

Connect an EMC noise filter to the input side (primary side) that complies with European standards as specified by Yaskawa. Refer to *External EMC Noise Filter Selection on page 163* to select the correct EMC noise filter.

Use this procedure to install an EMC noise filter to make equipment and devices added to the drive comply with the EMC Directive.

1. Install the drive and EMC noise filter on the same grounded metal plate.
2. Wire the drive and motor.

3. Ground the wire shielding on the drive side and motor side.

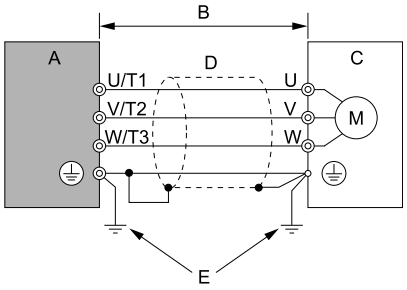

A - Drive
B - 10 m (32.8 ft) maximum
C - Motor
D - Metal conduit
E - Grounding wire

Figure 5.11 Wiring the Drive and Motor

Note:
- Use a braided shield cable for the drive and motor wiring or put the wires through a metal conduit.
- Keep the wire as short as possible. The maximum wiring length between the drive and motor is:
  – Q2V-A4xxx-Axx: 20 m (65.6 ft.) maximum, Class C2
  – Q2V-A2xxx-Axx: 20 m (65.6 ft.) maximum, Class C3
  – Q2V-ABxxx-Axx: 10 m (32.8 ft.) maximum, Class C1
- Keep the grounding wire as short as possible.

4. Use a cable clamp to ground the motor cable to the metal plate.

Note:
Make sure that the protective ground wire complies with technical specifications or local safety standards.

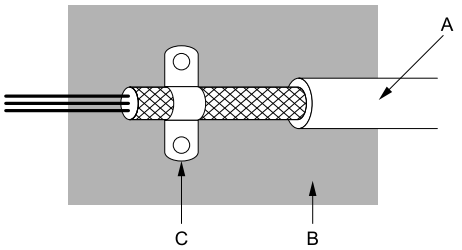

A - Braided shield cable
B - Metal plate
C - Cable clamp (conductive)

Figure 5.12 Ground the shield

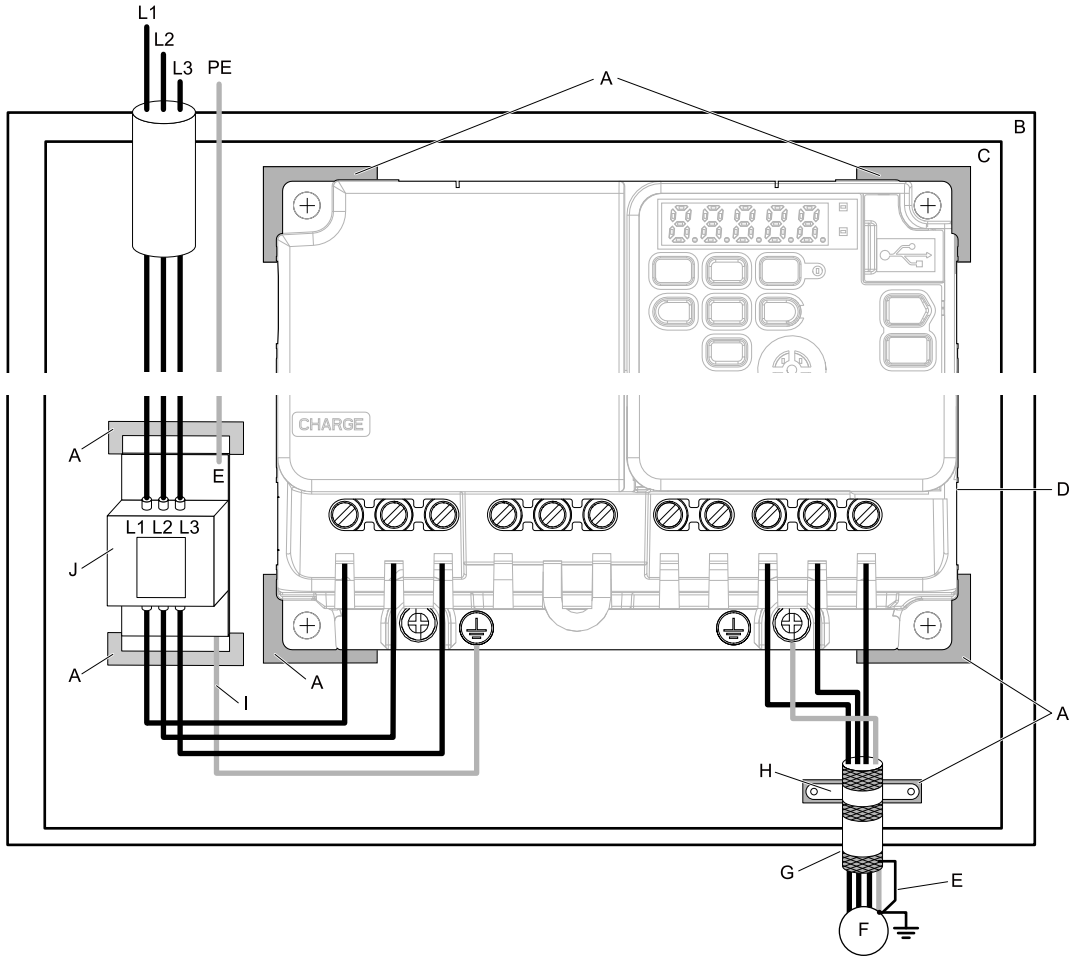

A - Grounding surface (Remove any paint or sealant.)
B - Enclosure panel
C - Metal plate
D - Drive
E - Ground the shield.
F - Motor
G - Motor cable (Braided shield cable: 10 m (32.8 ft) maximum)
H - Cable clamp
I - Grounding wire
J - EMC noise filter

Figure 5.13 EMC Noise Filter and Drive Installation Procedure

5. Connect the DC reactor to decrease harmonic distortion.
   Refer to *DC Reactor Selection on page 164* to select a DC reactor.

Note:
• To maintain compliance with EN 61000-3-2 on drive models 2001 to 2006, 4001 to 4004, install a DC reactor.

Ground Wiring

WARNING! *Electrical Shock Hazard. Do not remove covers or touch circuit boards while the drive is energized. If you touch the internal components of an energized drive, it can cause serious injury or death.*

External EMC Noise Filter Selection

Table 5.10 External EMC Noise Filter (2xxxA)

Drive model	EMC Noise Filter Model	Quantity	Manufacturer
2001	FS23637-8-07	1	Schaffner
2002	FS23637-8-07	1	Schaffner
2004	FS23637-8-07	1	Schaffner
2006	FS23637-8-07	1	Schaffner
2010	FS23637-14-07	1	Schaffner
2012	FS23637-14-07	1	Schaffner
2021	FS23637-24-07	1	Schaffner
2030	FS5973-35-07 *1	1	Schaffner
2042	FS5973-60-07 *1	1	Schaffner

Drive model	EMC Noise Filter Model	Quantity	Manufacturer
2056	FS5973-100-07 *1	1	Schaffner
2070	FS5973-100-07 *1	1	Schaffner
2082	RTEN-5200	1	TDK

*1 When you install an external EMC noise filter, change the terminals or use the junction terminal.

Table 5.11 External EMC Noise Filter (BxxxA)

Drive model	EMC Noise Filter Model	Quantity	Manufacturer
B001	FS23638-10-07	1	Schaffner
B002	FS23638-10-07	1	Schaffner
B004	FS23638-10-07	1	Schaffner
B006	FS23638-20-07	1	Schaffner
B010	FS23638-20-07	1	Schaffner
B012	FS23638-30-07	1	Schaffner
B018	FS23638-40-07	1	Schaffner

Table 5.12 External EMC Noise Filter (4xxxA)

Drive model	EMC Noise Filter Model	Quantity	Manufacturer
4001	FS23639-5-07	1	Schaffner
4002	FS23639-5-07	1	Schaffner
4004	FS23639-5-07	1	Schaffner
4005	FS23639-10-07	1	Schaffner
4007	FS23639-10-07	1	Schaffner
4009	FS23639-10-07	1	Schaffner
4012	FS23639-15-07	1	Schaffner
4018	FS5972-35-07 *1	1	Schaffner
4023	FS5972-35-07 *1	1	Schaffner
4031	FS5972-60-07 *1	1	Schaffner
4038	FS5972-60-07 *1	1	Schaffner
4044	RTEN-5100	1	TDK
4060	RTEN-5100	1	TDK

*1 When you install an external EMC noise filter, change the terminals or use the junction terminal.

■ DC Reactor Selection

To comply with EN 61000-3-2, install a DC reactor to drive models 2001 to 2006, and 4001 to 4004 when you use an internal or external EMC filter.

Table 5.13 DC Reactors for Harmonic Suppression

Drive Model	DC Reactor Model Manufacturer: Yaskawa	Rating
2001 - 2006	UZDA-B	5.4A, 8mA
4001 - 4004	UZDA-B	3.2A, 28mA

5.3 UL Standards

Figure 5.14 UL/cUL Mark

The UL/cUL Mark indicates that this product satisfies stringent safety standards. This mark appears on products in the United States and Canada. It shows UL approval, indicating that it has been determined that the product complies with safety standards after undergoing strict inspection and assessment. You must use UL Listed or UL Recognized parts for all primary components that are built into electrical equipment that has UL approval.

This product has been tested in accordance with UL standard UL61800-5-1, and has been verified to be in compliance with UL standards.

Machines and devices integrated with this product must satisfy the following conditions for compliance with UL standards.

◆ Area of Use

Install this product in a location with Overvoltage Category III and pollution degree 2 or less as specified in UL61800-5-1.

■ Ambient Temperature Setting

Maintain the ambient temperature within the following ranges according to the enclosure type.

- IP20/UL Type 1: -10 °C to +40 °C (14 °F to 104 °F)
- IP20/UL Open Type: -10 °C to +50 °C (14 °F to 122 °F)

◆ Wire the Main Circuit Terminal Block

Wire the main circuit terminal block correctly as specified by the instructions in the manual.

To select the correct wire gauge, refer to *Main Circuit Wire Gauges and Tightening Torques (UL Compliance) on page 166*.

■ Notes on Wiring the Main Circuit Terminal Block

Read these notes before you wire the main circuit terminal block.

- Use UL-Listed, vinyl-coated insulated copper wires for operation with a continuous maximum permitted temperature of 75 °C at 600 V.
- Remove all unwanted objects that are near the terminal block connections.
- Remove the insulation from the connection wires to the wire stripping lengths shown in the manual.
- Do not use bent or crushed wires. Remove the damaged end of the wire before you use it. Incorrect connections can cause death or serious injury from fire.
- Do not solder stranded wire. Soldered wire connections can become loose over time and cause unsatisfactory drive performance.
- If you use stranded wire, make sure that all of the wire strands are in the connection. Also, do not twist the stranded wire too much. Incorrect connections can cause death or serious injury from fire.
- Put the wire all the way into the terminal block. Remove the insulation from the wire to the recommended wire stripping length to fit the wire with insulation in the plastic housing.
- Use a torque driver, torque ratchet, or torque wrench for the screws. A slotted driver or a hex tool will be necessary to wire the screw clamp terminal. Use applicable tools as specified by the recommended conditions in the product manual.
- If you use power tools to tighten the terminal screws, use a low speed setting (300 to 400 r/min). Failure to obey can cause damage to the terminal screws.
- Wire gauges on existing drive models to be replaced may not match wire gauge ranges on new drives. Refer to the drive manuals for correct wire sizes.
- Do not tighten the terminal screws at an angle of 5 degrees or more. Failure to obey can cause damage to the terminal screws.

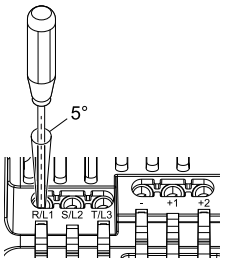

Figure 5.15 Permitted Angle

- Put the bit all the way into the hex socket to tighten the hex socket cap screw.
- When you tighten slotted screws, hold the straight-edge screwdriver perpendicularly to the screw. Make sure that you align the end of the straight-edge screwdriver with the screw groove.

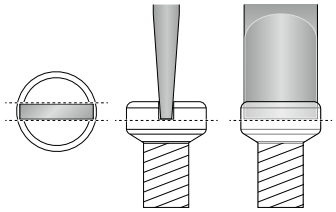

Figure 5.16 Tightening Slotted Screws

- After connecting the wires to the terminal block, lightly pull on the wires to make sure that they do not come out of the terminals.
- Do not let strain on the wiring cause damage. Use a strain relief near the wiring to release the tension. Refer to Figure 5.17 for an example.

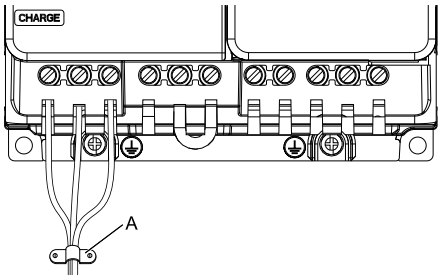

A - Cable clamp

Figure 5.17 Strain Relief Example

Table 5.14 Recommended Wiring Tools

Screw Size	Screw Shape	Wire Gauge	Adapter	Bit Model (Manufacturer)	Torque Driver Model (Tightening Torque)	Torque Wrench (Tightening Torque)
M3	⊖	-	Bit	SF-BIT-SL 0,5X3,0-70 (PHOENIX CONTACT)	TSD-M 1,2NM (0.3 - 1.2 N·m (2.7 - 10.6 in·lb))	-
M4	⊖	-	Bit	SF-BIT-SL 1,0X4,0-70 (PHOENIX CONTACT)	TSD-M 3NM (1.2 - 3.0 N·m (10.6 - 26.6 in·lb))	-
M5 *1	⊖	≤ 25 mm² (AWG 10)	Bit	SF-BIT-SL 1,2X6,5-70 (PHOENIX CONTACT)	TSD-M 3NM (1.2 - 3.0 N·m (10.6 - 26.6 in·lb))	-
		≥ 30 mm² (AWG 8)			-	4.1 - 4.5 N·m (36.3 - 39.8 in·lb) *2 *3
M6	⑤ (WAF: 5 mm)	-	Bit	SF-BIT-HEX 5-50 (PHOENIX CONTACT)	-	5 - 9 N·m (44.3 - 79.7 in·lb) *2 *3

*1 When you wire drive models 2042, 2056, 4031, 4038, 4044, and 4060, select the correct tools for the wire gauge.
*2 Use 6.35 mm (0.25 in) bit socket holder.
*3 Use a torque wrench that can apply this torque measurement range.

■ Main Circuit Wire Gauges and Tightening Torques (UL Compliance)

Comply with local standards for correct wire gauges in the region where the drive is used.

WARNING! *Electrical Shock Hazard. Make sure that the protective ground wire conforms to technical standards and local safety regulations. The IEC/EN 61800-5-1:2007 standard specifies that you must wire the power supply to automatically de-energize when the protective ground wire disconnects. If you turn on the internal EMC filter, the leakage current of the drive will be more than 3.5 mA. You can also connect a protective ground wire that has a minimum cross-sectional area of 10 mm² (copper wire). If you do not obey the standards and regulations, it can cause serious injury or death.*

WARNING! *Electrical Shock Hazard. Only connect peripheral options, for example a DC reactor or braking resistor, to terminals +1, +2, -, B1, and B2. Failure to obey can cause serious injury or death.*

Note:

- The recommended wire gauges are based on drive continuous current ratings with 75 °C (167 °F) 600 V class 2 heat-resistant indoor PVC wire. Assume these conditions:
  - Ambient temperature: 40 °C (104 °F) maximum
  - Wiring distance: 100 m (3281 ft) maximum
  - Normal Duty rated current value
- Refer to the instruction manual for each device for recommended wire gauges to connect peripheral devices or options to terminals +1, +2, -, B1, and B2. Contact the manufacturer or your nearest sales representative if the recommended wire gauges for the peripheral devices or options are out of the range of the applicable gauges for the drive.

Three-Phase 200 V Class (UL Compliance)

Model	Terminal	Recommended Gauge AWG, kcmil	Applicable Gauge AWG, kcmil	Wire Stripping Length *1 mm	Terminal Screw		Tightening Torque N·m (in·lb)
					Size	Shape	
2001	R/L1, S/L2, T/L3	14	14	6.5	M3	⊖	0.5 - 0.6 (4.4 - 5.3)
	U/T1, V/T2, W/T3	14	14	6.5	M3	⊖	0.5 - 0.6 (4.4 - 5.3)
	-, +1, +2	14	14	6.5	M3	⊖	0.5 - 0.6 (4.4 - 5.3)
	B1, B2	14	14	6.5	M3	⊖	0.5 - 0.6 (4.4 - 5.3)
	⏚	14 *2	14 *2	-	M3.5	⊕	0.8 - 1.0 (7.1 - 8.9)
2002	R/L1, S/L2, T/L3	14	14	6.5	M3	⊖	0.5 - 0.6 (4.4 - 5.3)
	U/T1, V/T2, W/T3	14	14	6.5	M3	⊖	0.5 - 0.6 (4.4 - 5.3)
	-, +1, +2	14	14	6.5	M3	⊖	0.5 - 0.6 (4.4 - 5.3)
	B1, B2	14	14	6.5	M3	⊖	0.5 - 0.6 (4.4 - 5.3)
	⏚	14 *2	14 *2	-	M3.5	⊕	0.8 - 1.0 (7.1 - 8.9)
2004	R/L1, S/L2, T/L3	14	14	6.5	M3	⊖	0.5 - 0.6 (4.4 - 5.3)
	U/T1, V/T2, W/T3	14	14	6.5	M3	⊖	0.5 - 0.6 (4.4 - 5.3)
	-, +1, +2	14	14	6.5	M3	⊖	0.5 - 0.6 (4.4 - 5.3)
	B1, B2	14	14	6.5	M3	⊖	0.5 - 0.6 (4.4 - 5.3)
	⏚	14 *2	14 *2	-	M3.5	⊕	0.8 - 1.0 (7.1 - 8.9)
2006	R/L1, S/L2, T/L3	14	14	6.5	M3	⊖	0.5 - 0.6 (4.4 - 5.3)
	U/T1, V/T2, W/T3	14	14	6.5	M3	⊖	0.5 - 0.6 (4.4 - 5.3)
	-, +1, +2	14	14	6.5	M3	⊖	0.5 - 0.6 (4.4 - 5.3)
	B1, B2	14	14	6.5	M3	⊖	0.5 - 0.6 (4.4 - 5.3)
	⏚	14 *2	14 *2	-	M3.5	⊕	0.8 - 1.0 (7.1 - 8.9)

Model	Terminal	Recommended Gauge AWG, kcmil	Applicable Gauge AWG, kcmil	Wire Stripping Length *1 mm	Terminal Screw		Tightening Torque N·m (in·lb)
					Size	Shape	
2008	R/L1, S/L2, T/L3	14	14 - 12	8	M3	⊖	0.5 - 0.6 (4.4 - 5.3)
	U/T1, V/T2, W/T3	14	14 - 12	8	M3	⊖	0.5 - 0.6 (4.4 - 5.3)
	-, +1, +2	14	14 - 12	8	M3	⊖	0.5 - 0.6 (4.4 - 5.3)
	B1, B2	14	14 - 12	8	M3	⊖	0.5 - 0.6 (4.4 - 5.3)
	⏚	10 *2	14 - 10 *2	-	M4	⊕	1.2 - 1.5 (10.6 - 13.3)
2010	R/L1, S/L2, T/L3	14	14 - 12	8	M3	⊖	0.5 - 0.6 (4.4 - 5.3)
	U/T1, V/T2, W/T3	14	14 - 12	8	M3	⊖	0.5 - 0.6 (4.4 - 5.3)
	-, +1, +2	12	14 - 10	8	M3	⊖	0.5 - 0.6 (4.4 - 5.3)
	B1, B2	14	14 - 12	8	M3	⊖	0.5 - 0.6 (4.4 - 5.3)
	⏚	10 *2	14 - 10 *2	-	M4	⊕	1.2 - 1.5 (10.6 - 13.3)
2012	R/L1, S/L2, T/L3	12	14 - 10	8	M3	⊖	0.5 - 0.6 (4.4 - 5.3)
	U/T1, V/T2, W/T3	12	14 - 10	8	M3	⊖	0.5 - 0.6 (4.4 - 5.3)
	-, +1, +2	10	12 - 10	8	M3	⊖	0.5 - 0.6 (4.4 - 5.3)
	B1, B2	14	14 - 12	8	M3	⊖	0.5 - 0.6 (4.4 - 5.3)
	⏚	10 *2	14 - 10 *2	-	M4	⊕	1.2 - 1.5 (10.6 - 13.3)
2018	R/L1, S/L2, T/L3	10	12 - 8	10	M4	⊖	1.5 - 1.7 (13.5 - 15)
	U/T1, V/T2, W/T3	10	12 - 8	10	M4	⊖	1.5 - 1.7 (13.5 - 15)
	-, +1, +2	10	14 - 8	10	M4	⊖	1.5 - 1.7 (13.5 - 15)
	B1, B2	14	14 - 12	10	M4	⊖	1.5 - 1.7 (13.5 - 15)
	⏚	8 *2	14 - 8 *2	-	M4	⊕	1.2 - 1.5 (10.6 - 13.3)
2021	R/L1, S/L2, T/L3	8	14 - 8	10	M4	⊖	1.5 - 1.7 (13.5 - 15)
	U/T1, V/T2, W/T3	10	14 - 8	10	M4	⊖	1.5 - 1.7 (13.5 - 15)
	-, +1, +2	8	14 - 8	10	M4	⊖	1.5 - 1.7 (13.5 - 15)
	B1, B2	14	14 - 10	10	M4	⊖	1.5 - 1.7 (13.5 - 15)
	⏚	8	14 - 8	-	M4	⊕	1.2 - 1.5 (10.6 - 13.3)

Model	Terminal	Recommended Gauge AWG, kcmil	Applicable Gauge AWG, kcmil	Wire Stripping Length *1 mm	Terminal Screw		Tightening Torque N·m (in·lb)
					Size	Shape	
2030	R/L1, S/L2, T/L3	8	12 - 6	10	M4	⊖	1.5 - 1.7 (13.5 - 15)
	U/T1, V/T2, W/T3	8	12 - 6	10	M4	⊖	1.5 - 1.7 (13.5 - 15)
	-, +1, +2	6	12 - 6	10	M4	⊖	1.5 - 1.7 (13.5 - 15)
	B1, B2	12	12 - 8	10	M4	⊖	1.5 - 1.7 (13.5 - 15)
	⏚	8	10 - 6	-	M5	⊕	2.0 - 2.5 (17.7 - 22.1)
2042	R/L1, S/L2, T/L3	6	12 - 6	10	M4	⊖	1.5 - 1.7 (13.5 - 15)
	U/T1, V/T2, W/T3	6	12 - 6	10	M4	⊖	1.5 - 1.7 (13.5 - 15)
	-, +1, +2	4	10 - 2	18	M5	⊖	• ≤ AWG 10 2.3 - 2.5 (19.8 - 22) • AWG 8 ≤ 4.1 - 4.5 (36 - 40)
	B1, B2	10	14 - 6	10	M4	⊖	1.5 - 1.7 (13.5 - 15)
	⏚	6	10 - 6	-	M5	⊕	2.0 - 2.5 (17.7 - 22.1)
2056	R/L1, S/L2, T/L3	4	10 - 2	18	M5	⊖	4.1 - 4.5 (36 - 40)
	U/T1, V/T2, W/T3	4	10 - 2	18	M5	⊖	• ≤ AWG 10 2.3 - 2.5 (19.8 - 22) • AWG 8 ≤ 4.1 - 4.5 (36 - 40)
	-, +1, +2	2	8 - 2	18	M5	⊖	4.1 - 4.5 (36 - 40)
	B1, B2	8	12 - 6	10	M4	⊖	1.5 - 1.7 (13.5 - 15)
	⏚	6	8 - 4	-	M6	⊕	5.4 - 6.0 (47.8 - 53.1)
2070	R/L1, S/L2, T/L3	2	6 - 1	20	M6	⑤	5 - 5.5 (45 - 49)
	U/T1, V/T2, W/T3	2	8 - 1	20	M6	⑤	5 - 5.5 (45 - 49)
	-, +1, +2	1	6 - 1/0	20	M6	⑤	5 - 5.5 (45 - 49)
	B1, B2	8	12 - 6	10	M4	⊖	1.5 - 1.7 (13.5 - 15)
	⏚	4	6 - 4	-	M6	⊕	5.4 - 6.0 (47.8 - 53.1)
2082	R/L1, S/L2, T/L3	1	6 - 1/0	20	M6	⑤	5 - 5.5 (45 - 49)
	U/T1, V/T2, W/T3	2	6 - 1	20	M6	⑤	5 - 5.5 (45 - 49)
	-, +1, +2	2/0	2 - 2/0	20	M6	⑤	5 - 5.5 (45 - 49)
	B1, B2	6	10 - 6	10	M4	⊖	1.5 - 1.7 (13.5 - 15)
	⏚	4	6 - 4	-	M6	⊕	5.4 - 6.0 (47.8 - 53.1)

*1 Remove insulation from the ends of wires to expose the length of wire shown.

*2 If you turn on the internal EMC filter, the leakage current of the drive will be more than 3.5 mA. Use these closed-loop crimp terminals or equivalent to connect a protective ground wire that has a minimum cross-sectional area of 10 mm² (copper wire).

- 8-4NS from JST Mfg. Co., Ltd.
- R8-4S from NICHIFU Co.,Ltd.

Single-Phase 200 V Class (UL Compliance)

Model	Terminal	Recommended Gauge AWG, kcmil	Applicable Gauge AWG, kcmil	Wire Stripping Length *1 mm	Terminal Screw		Tightening Torque N·m (in·lb)
					Size	Shape	
B001	L/L1, N/L2	14	14	6.5	M3	⊖	0.5 - 0.6 (4.4 - 5.3)
	U/T1, V/T2, W/T3	14	14	6.5	M3	⊖	0.5 - 0.6 (4.4 - 5.3)
	-, +1	14	14	6.5	M3	⊖	0.5 - 0.6 (4.4 - 5.3)
	B1, B2	14	14	6.5	M3	⊖	0.5 - 0.6 (4.4 - 5.3)
	⏚	14 *2	14 *2	-	M3.5	⊕	0.8 - 1.0 (7.1 - 8.9)
B002	L/L1, N/L2	14	14	6.5	M3	⊖	0.5 - 0.6 (4.4 - 5.3)
	U/T1, V/T2, W/T3	14	14	6.5	M3	⊖	0.5 - 0.6 (4.4 - 5.3)
	-, +1	14	14	6.5	M3	⊖	0.5 - 0.6 (4.4 - 5.3)
	B1, B2	14	14	6.5	M3	⊖	0.5 - 0.6 (4.4 - 5.3)
	⏚	14 *2	14 *2	-	M3.5	⊕	0.8 - 1.0 (7.1 - 8.9)
B004	L/L1, N/L2	14	14	6.5	M3	⊖	0.5 - 0.6 (4.4 - 5.3)
	U/T1, V/T2, W/T3	14	14	6.5	M3	⊖	0.5 - 0.6 (4.4 - 5.3)
	-, +1	14	14	6.5	M3	⊖	0.5 - 0.6 (4.4 - 5.3)
	B1, B2	14	14	6.5	M3	⊖	0.5 - 0.6 (4.4 - 5.3)
	⏚	14 *2	14 *2	-	M3.5	⊕	0.8 - 1.0 (7.1 - 8.9)
B006	L/L1, N/L2	12	14 - 10	8	M3	⊖	0.5 - 0.6 (4.4 - 5.3)
	U/T1, V/T2, W/T3	14	14 - 12	8	M3	⊖	0.5 - 0.6 (4.4 - 5.3)
	-, +1	12	14 - 10	8	M3	⊖	0.5 - 0.6 (4.4 - 5.3)
	B1, B2	14	14 - 12	8	M3	⊖	0.5 - 0.6 (4.4 - 5.3)
	⏚	10 *2	14 - 10 *2	-	M4	⊕	1.2 - 1.5 (10.6 - 13.3)
B010	L/L1, N/L2	10	12 - 10	8	M3	⊖	0.5 - 0.6 (4.4 - 5.3)
	U/T1, V/T2, W/T3	14	14 - 12	8	M3	⊖	0.5 - 0.6 (4.4 - 5.3)
	-, +1	10	12 - 10	8	M3	⊖	0.5 - 0.6 (4.4 - 5.3)
	B1, B2	14	14 - 12	8	M3	⊖	0.5 - 0.6 (4.4 - 5.3)
	⏚	10 *2	14 - 10 *2	-	M4	⊕	1.2 - 1.5 (10.6 - 13.3)

Model	Terminal	Recommended Gauge AWG, kcmil	Applicable Gauge AWG, kcmil	Wire Stripping Length *1 mm	Terminal Screw		Tightening Torque N·m (in·lb)
					Size	Shape	
B012	L/L1, N/L2	8	14 - 8	10	M4	⊖	1.5 - 1.7 (13.5 - 15)
	U/T1, V/T2, W/T3	12	14 - 10	10	M4	⊖	1.5 - 1.7 (13.5 - 15)
	-, +1	8	14 - 8	10	M4	⊖	1.5 - 1.7 (13.5 - 15)
	B1, B2	14	14 - 12	10	M4	⊖	1.5 - 1.7 (13.5 - 15)
	⏚	10 *2	14 - 10 *2	-	M4	⊕	1.2 - 1.5 (10.6 - 13.3)
B018	L/L1, N/L2	8	12 - 6	10	M4	⊖	1.5 - 1.7 (13.5 - 15)
	U/T1, V/T2, W/T3	10	14 - 8	10	M4	⊖	1.5 - 1.7 (13.5 - 15)
	-, +1	8	12 - 6	10	M4	⊖	1.5 - 1.7 (13.5 - 15)
	B1, B2	14	14 - 12	10	M4	⊖	1.5 - 1.7 (13.5 - 15)
	⏚	8 *2	12 - 8 *2	-	M5	⊕	2.0 - 2.5 (17.7 - 22.1)

*1 Remove insulation from the ends of wires to expose the length of wire shown.

*2 If you turn on the internal EMC filter, the leakage current of the drive will be more than 3.5 mA. Use these closed-loop crimp terminals or equivalent to connect a protective ground wire that has a minimum cross-sectional area of 10 mm^2 (copper wire).

- 8-4NS from JST Mfg. Co., Ltd.
- R8-4S from NICHIFU Co., Ltd.

Three-Phase 400 V Class (UL Compliance)

Model	Terminal	Recommended Gauge AWG, kcmil	Applicable Gauge AWG, kcmil	Wire Stripping Length *1 mm	Terminal Screw		Tightening Torque N·m (in·lb)
					Size	Shape	
4001	R/L1, S/L2, T/L3	14	14 - 12	8	M3	⊖	0.5 - 0.6 (4.4 - 5.3)
	U/T1, V/T2, W/T3	14	14 - 12	8	M3	⊖	0.5 - 0.6 (4.4 - 5.3)
	-, +1, +2	14	14 - 12	8	M3	⊖	0.5 - 0.6 (4.4 - 5.3)
	B1, B2	14	14 - 12	8	M3	⊖	0.5 - 0.6 (4.4 - 5.3)
	⏚	14 *2	14 - 10 *2	-	M4	⊕	1.2 - 1.5 (10.6 - 13.3)
4002	R/L1, S/L2, T/L3	14	14 - 12	8	M3	⊖	0.5 - 0.6 (4.4 - 5.3)
	U/T1, V/T2, W/T3	14	14 - 12	8	M3	⊖	0.5 - 0.6 (4.4 - 5.3)
	-, +1, +2	14	14 - 12	8	M3	⊖	0.5 - 0.6 (4.4 - 5.3)
	B1, B2	14	14 - 12	8	M3	⊖	0.5 - 0.6 (4.4 - 5.3)
	⏚	14 *2	14 - 10 *2	-	M4	⊕	1.2 - 1.5 (10.6 - 13.3)

Model	Terminal	Recommended Gauge AWG, kcmil	Applicable Gauge AWG, kcmil	Wire Stripping Length *1 mm	Terminal Screw		Tightening Torque N·m (in·lb)
					Size	Shape	
4004	R/L1, S/L2, T/L3	14	14 - 12	8	M3	⊖	0.5 - 0.6 (4.4 - 5.3)
	U/T1, V/T2, W/T3	14	14 - 12	8	M3	⊖	0.5 - 0.6 (4.4 - 5.3)
	-, +1, +2	14	14 - 12	8	M3	⊖	0.5 - 0.6 (4.4 - 5.3)
	B1, B2	14	14 - 12	8	M3	⊖	0.5 - 0.6 (4.4 - 5.3)
	⏚	10 *2	14 - 10 *2	-	M4	⊕	1.2 - 1.5 (10.6 - 13.3)
4005	R/L1, S/L2, T/L3	14	14 - 12	8	M3	⊖	0.5 - 0.6 (4.4 - 5.3)
	U/T1, V/T2, W/T3	14	14 - 12	8	M3	⊖	0.5 - 0.6 (4.4 - 5.3)
	-, +1, +2	14	14 - 12	8	M3	⊖	0.5 - 0.6 (4.4 - 5.3)
	B1, B2	14	14 - 12	8	M3	⊖	0.5 - 0.6 (4.4 - 5.3)
	⏚	10 *2	14 - 10 *2	-	M4	⊕	1.2 - 1.5 (10.6 - 13.3)
4007	R/L1, S/L2, T/L3	14	14 - 12	8	M3	⊖	0.5 - 0.6 (4.4 - 5.3)
	U/T1, V/T2, W/T3	14	14 - 12	8	M3	⊖	0.5 - 0.6 (4.4 - 5.3)
	-, +1, +2	14	14 - 12	8	M3	⊖	0.5 - 0.6 (4.4 - 5.3)
	B1, B2	14	14 - 12	8	M3	⊖	0.5 - 0.6 (4.4 - 5.3)
	⏚	10 *2	14 - 10 *2	-	M4	⊕	1.2 - 1.5 (10.6 - 13.3)
4009	R/L1, S/L2, T/L3	14	14 - 12	8	M3	⊖	0.5 - 0.6 (4.4 - 5.3)
	U/T1, V/T2, W/T3	14	14 - 12	8	M3	⊖	0.5 - 0.6 (4.4 - 5.3)
	-, +1, +2	14	14 - 12	8	M3	⊖	0.5 - 0.6 (4.4 - 5.3)
	B1, B2	14	14 - 12	8	M3	⊖	0.5 - 0.6 (4.4 - 5.3)
	⏚	10 *2	14 - 10 *2	-	M4	⊕	1.2 - 1.5 (10.6 - 13.3)
4012	R/L1, S/L2, T/L3	12	14 - 10	10	M4	⊖	1.5 - 1.7 (13.5 - 15)
	U/T1, V/T2, W/T3	14	14 - 12	10	M4	⊖	1.5 - 1.7 (13.5 - 15)
	-, +1, +2	10	12 - 8	10	M4	⊖	1.5 - 1.7 (13.5 - 15)
	B1, B2	14	14 - 12	10	M4	⊖	1.5 - 1.7 (13.5 - 15)
	⏚	10 *2	14 - 10 *2	-	M4	⊕	1.2 - 1.5 (10.6 - 13.3)

Model	Terminal	Recommended Gauge AWG, kcmil	Applicable Gauge AWG, kcmil	Wire Stripping Length *1 mm	Terminal Screw		Tightening Torque N·m (in·lb)
					Size	Shape	
4018	R/L1, S/L2, T/L3	10	12 - 8	10	M4	⊖	1.5 - 1.7 (13.5 - 15)
	U/T1, V/T2, W/T3	10	12 - 8	10	M4	⊖	1.5 - 1.7 (13.5 - 15)
	-, +1, +2	10	14 - 8	10	M4	⊖	1.5 - 1.7 (13.5 - 15)
	B1, B2	14	14 - 12	10	M4	⊖	1.5 - 1.7 (13.5 - 15)
	⏚	10 *2	14 - 6 *2	-	M5	⊕	2.0 - 2.5 (17.7 - 22.1)
4023	R/L1, S/L2, T/L3	8	14 - 6	10	M4	⊖	1.5 - 1.7 (13.5 - 15)
	U/T1, V/T2, W/T3	10	14 - 8	10	M4	⊖	1.5 - 1.7 (13.5 - 15)
	-, +1, +2	8	12 - 6	10	M4	⊖	1.5 - 1.7 (13.5 - 15)
	B1, B2	12	14 - 10	10	M4	⊖	1.5 - 1.7 (13.5 - 15)
	⏚	10 *2	10 - 6 *2	-	M5	⊕	2.0 - 2.5 (17.7 - 22.1)
4031	R/L1, S/L2, T/L3	8	12 - 6	10	M4	⊖	1.5 - 1.7 (13.5 - 15)
	U/T1, V/T2, W/T3	8	12 - 6	10	M4	⊖	1.5 - 1.7 (13.5 - 15)
	-, +1, +2	6	12 - 4	18	M5	⊖	• ≤ AWG 10 2.3 - 2.5 (19.8 - 22) • AWG 8 ≤ 4.1 - 4.5 (36 - 40)
	B1, B2	10	12 - 8	10	M4	⊖	1.5 - 1.7 (13.5 - 15)
	⏚	8	10 - 6	-	M6	⊕	5.4 - 6.0 (47.8 - 53.1)
4038	R/L1, S/L2, T/L3	6	12 - 6	10	M4	⊖	1.5 - 1.7 (13.5 - 15)
	U/T1, V/T2, W/T3	8	12 - 6	10	M4	⊖	1.5 - 1.7 (13.5 - 15)
	-, +1, +2	4	10 - 2	18	M5	⊖	• ≤ AWG 10 2.3 - 2.5 (19.8 - 22) • AWG 8 ≤ 4.1 - 4.5 (36 - 40)
	B1, B2	10	14 - 6	10	M4	⊖	1.5 - 1.7 (13.5 - 15)
	⏚	6	10 - 6	-	M6	⊕	5.4 - 6.0 (47.8 - 53.1)

Model	Terminal	Recommended Gauge AWG, kcmil	Applicable Gauge AWG, kcmil	Wire Stripping Length *1 mm	Terminal Screw		Tightening Torque N·m (in·lb)
					Size	Shape	
4044	R/L1, S/L2, T/L3	4	10 - 2	18	M5	⊖	• ≤ AWG 10 2.3 - 2.5 (19.8 - 22) • AWG 8 ≤ 4.1 - 4.5 (36 - 40)
	U/T1, V/T2, W/T3	6	12 - 4	18	M5	⊖	• ≤ AWG 10 2.3 - 2.5 (19.8 - 22) • AWG 8 ≤ 4.1 - 4.5 (36 - 40)
	-, +1, +2	2	8 - 2	18	M5	⊖	4.1 - 4.5 (36 - 40)
	B1, B2	8	12 - 6	10	M4	⊖	1.5 - 1.7 (13.5 - 15)
	⏚	6	10 - 6	-	M6	⊕	5.4 - 6.0 (47.8 - 53.1)
4060	R/L1, S/L2, T/L3	2	8 - 2	18	M5	⊖	4.1 - 4.5 (36 - 40)
	U/T1, V/T2, W/T3	4	10 - 2	18	M5	⊖	• ≤ AWG 10 2.3 - 2.5 (19.8 - 22) • AWG 8 ≤ 4.1 - 4.5 (36 - 40)
	-, +1, +2	2	6 - 2	18	M5	⊖	4.1 - 4.5 (36 - 40)
	B1, B2	8	12 - 6	10	M4	⊖	1.5 - 1.7 (13.5 - 15)
	⏚	6	10 - 6	-	M6	⊕	5.4 - 6.0 (47.8 - 53.1)

*1 Remove insulation from the ends of wires to expose the length of wire shown.

*2 If you turn on the internal EMC filter, the leakage current of the drive will be more than 3.5 mA. Use these closed-loop crimp terminals or equivalent to connect a protective ground wire that has a minimum cross-sectional area of 10 mm^2 (copper wire).

- 8-4NS from JST Mfg. Co., Ltd.
- R8-4S from NICHIFU Co.,Ltd.

■ Factory-Recommended Branch Circuit Protection for UL Listing

Use branch circuit protection to protect against short circuits and to maintain compliance with UL61800-5-1. The manufacturer recommends connecting semiconductor protection fuses on the input side for branch circuit protection.

WARNING! *Electrical Shock Hazard. After the drive blows a fuse or trips an RCM/RCD, do not immediately energize the drive or operate peripheral devices. Wait for the time specified on the warning label at a minimum and make sure that all indicators are OFF. Then check the wiring and peripheral device ratings to find the cause of the problem. If you do not know the cause of the problem, contact the manufacturer before you energize the drive or peripheral devices. If you do not fix the problem before you operate the drive or peripheral devices, it can cause serious injury or death.*

- 200 V class
  Use the fuses specified in this document to prepare the drive for use on a circuit that supplies not more than 31,000 RMS and not more than 240 Vac when there is a short circuit in the power supply.
- 400 V class
  Use the fuses specified in this document to prepare the drive for use on a circuit that supplies not more than 31,000 RMS and not more than 480 Vac when there is a short circuit in the power supply.

The built-in short circuit protection of the drive does not provide branch circuit protection. The user must provide branch circuit protection as specified by the National Electric Code (NEC), the Canadian Electric Code, Part I (CEC), and local codes.

Three-Phase 200 V Class

Table 5.15 Factory-Recommended Branch Circuit Protection: Three-Phase 200 V Class

Drive Model	Maximum Applicable Motor Output kW (HP)		Time Delay Fuse	Semiconductor Protection Fuse Rated Current Manufacturer: EATON/Bussmann	
	ND	HD	Class J, CC, and T Fuse Rated Current A	Model	Input Rated Current A
2001	0.18 (1/6)	0.1 (1/6)	3	FWH-25A14F	25
2002	0.37 (1/4)	0.25 (1/4)	6	FWH-25A14F	25
2004	0.75 (3/4)	0.55 (1/2)	6	FWH-25A14F	25
2006	1.1 (1.5)	0.75 (1)	10	FWH-25A14F	25
2008	1.5 (2)	1.1 (1.5)	15	FWH-70B	70
2010	2.2 (3)	1.5 (2)	20	FWH-70B	70
2012	3.0 (4)	2.2 (3)	25	FWH-70B	70
2018	3.7 (5)	3.0 (4)	30	FWH-90B	90
2021	5.5 (5)	4.0 (5)	40	FWH-90B	90
2030	7.5 (10)	5.5 (7.5)	-	FWH-100B	100
2042	11 (15)	7.5 (10)	-	FWH-150B	150
2056	15 (20)	11 (15)	-	FWH-200B	200
2070	18.5 (25)	15 (20)	-	FWH-200B	200
2082	22 (30)	18.5 (25)	-	FWH-225A	225

Single-Phase 200 V Class

Table 5.16 Factory-Recommended Branch Circuit Protection: Single-Phase 200 V Class

Drive Model	Maximum Applicable Motor Output kW (HP)		Time Delay Fuse	Semiconductor Protection Fuse Rated Current Manufacturer: EATON/Bussmann	
	ND	HD	Class J, T, and CC Fuse Rated Current A	Model	Input Rated Current A
B001	0.18 (1/6)	0.1 (1/6)	3	FWH-25A14F	25
B002	0.37 (1/4)	0.25 (1/4)	6	FWH-25A14F	25
B004	0.75 (3/4)	0.55 (1/2)	10	FWH-60B	60
B006	1.1 (1.5)	1.1 (1)	15	FWH-80B	80
B010	2.2 (3)	1.5 (2)	25	FWH-100B	100
B012	3.0 (3)	2.2 (3)	30	FWH-125B	125
B018	-	4.0 (5)	-	FWH-150B	150

Three-Phase 400 V Class

Table 5.17 Factory-Recommended Branch Circuit Protection: Three-Phase 400 V Class

Drive Model	Maximum Applicable Motor Output kW (HP)		Time Delay Fuse	Semiconductor Protection Fuse Rated Current Manufacturer: EATON/Bussmann	
	ND	HD	Class J, CC, and T Fuse Rated Current A	Model	Input Rated Current A
4001	0.37 (1/2)	0.37 (1/2)	3	FWH-40B	40
4002	0.75 (1)	0.55 (3/4)	6	FWH-40B	40
4004	1.5 (2)	1.1 (2)	10	FWH-50B	50
4005	2.2 (3)	1.5 (3)	10	FWH-70B	70
4007	3.0 (4)	2.2 (3)	15	FWH-70B	70
4009	4.0 (5)	3.0 (4)	20	FWH-90B	90
4012	5.5 (7.5)	4.0 (5)	25	FWH-90B	90
4018	7.5 (10)	5.5 (10)	-	FWH-80B	80

Drive Model	Maximum Applicable Motor Output kW (HP)		Time Delay Fuse	Semiconductor Protection Fuse Rated Current Manufacturer: EATON/Bussmann	
	ND	HD	Class J, CC, and T Fuse Rated Current A	Model	Input Rated Current A
4023	11.0 (15)	7.5 (10)	-	FWH-100B	100
4031	15.0 (20)	11.0 (15)	-	FWH-125B	125
4038	18.5 (25)	15.0 (20)	-	FWH-175B	175
4044	22.0 (30)	18.5 (25)	-	FWH-200B	200
4060	30.0 (40)	22.0 (30)	-	FWH-200B	200

◆ Low Voltage Wiring for Control Circuit Terminals

You must provide low voltage wiring as specified by the National Electric Code (NEC), the Canadian Electric Code, Part I (CEC), and local codes. The manufacturer recommends the NEC class 1 circuit conductor. Use the UL approved class 2 power supply for external power supply.

Table 5.18 Control Circuit Terminal Power Supplies

Input/Output	Terminals	Power Supply Specifications
Digital input	DI1 to DI7, D0V, DIC, D24V	Uses the LVLC power supply in the drive. Use the UL Listed class 2 power supply for external power supply.
Analog input	AI1, AI2, A0V ,+10V	Uses the LVLC power supply in the drive. Use the UL Listed class 2 power supply for external power supply.
Analog output	AO, A0V	Uses the LVLC power supply in the drive.
Pulse train output	PO, A0V	Uses the LVLC power supply in the drive. Use the UL Listed class 2 power supply for external power supply.
Pulse Train Input	PI, A0V	Uses the LVLC power supply in the drive. Use the UL Listed class 2 power supply for external power supply.
Safe disable input	H1, H2, HC	Uses the LVLC power supply in the drive. Use the UL Listed class 2 power supply for external power supply.
Serial communication input/output	RS485+, RS485-, A0V	Uses the LVLC power supply in the drive. Use the UL Listed class 2 power supply for external power supply.
24 V external power supply	D24V, A0V	Use the UL Listed class 2 power supply.

◆ Drive Motor Overload and Overheat Protection

The drive motor overload and overheat protection function complies with the National Electric Code (NEC) and the Canadian Electric Code, Part I (CEC).

Set the Motor Rated Current and *L1-01 through L1-04 [Motor Overload Protection Select]* correctly to enable motor overload and overheat protection.

Refer to the control method and set the motor rated current with *E2-01 [Mot Rated Current (FLA)]*, *E5-03 [PM Mot Rated Current (FLA)]*, or *E9-06 [Motor Rated Current]*.

5.4 对应中国RoHS指令

图 5.18 中国RoHS标志

中国RoHS标志依据2016年1月26日公布的《电器电子产品有害物质限制使用管理办法》，以及《电子电气产品有害物质限制使用标识要求》（SJ/T 11364-2014）作成。电子电气产品中特定6种有害物质的含量超过规定值时，应标识此标志。中间的数字为在中国生产销售以及进口的电子电气产品的环保使用期限（年限）。电子电气产品的环保使用期限从生产日期算起。在期限内，正常使用产品的过程中，不会有特定的6种有害物质外泄进而对环境、人和财产造成深刻影响。

本产品的环保使用期限为15年。但需要注意的是环保使用期限并非产品的质量保证期限。

◆ 本产品中含有有害物质的信息

本产品中所含有害物质的详细信息如表 5.19所示。

表 5.19 本产品中有害物质的名称及含量

部件名称	有害物质					
	铅(Pb)	汞(Hg)	镉(Cd)	六价铬(Cr(VI))	多溴联苯(PBB)	多溴二苯醚(PBDE)
实装基板	×	○	○	○	○	○
电子元件	×	○	○	○	○	○
黄铜螺钉	×	○	○	○	○	○
铝压铸	×	○	○	○	○	○

本表格依据SJ/T 11364的规定编制。

○：表示该有害物质在该部件所有均质材料中的含量均在GB/T 26572规定的限量要求以下。

×：表示该有害物质至少在该部件的某一均质材料中的含量超出GB/T 26572规定的限量要求。

（注） 本产品符合欧盟RoHS指令。上表中的"×"表示含有欧盟RoHS指令豁免的有害物质。

5.5 China RoHS Compliance

Figure 5.19 China RoHS Mark

The China RoHS mark is displayed on products containing six specified hazardous substances that are in excess of regulatory limits, based on the “Administrative Measures for the Restriction of the Use of Hazardous Substances in Electrical and Electronic Products” and “Marking for the Restricted Use of Hazardous Substances in Electronic and Electrical Products” (SJ/T 11364-2014), which were promulgated on January 26, 2016. The number displayed in the center of the mark indicates the environment-friendly use period (number of years) in which electrical and electronic products that are being produced, sold, or imported to China can be used. The date of manufacture of the electrical and electronic product is the starting date of the environment-friendly use period for the product. The six specified hazardous substances contained in the product will not leak outside of the product during normal use within this period and will have no serious impact on the environment, the human body, or property.

The environment-friendly use period for this product is 15 years. This period is not the product warranty period.

◆ Information on Hazardous Substances in This Product

Table 5.20 shows the details on hazardous substances contained in this product.

Table 5.20 Contents of Hazardous Substances in This Product

Parts Name	Hazardous Substances					
	Lead (Pb)	Mercury (Hg)	Cadmium (Cd)	Hexavalent Chromium (Cr(VI))	Polybrominated Biphenyls (PBB)	Polybrominated Diphenyl Ethers (PBDE)
Circuit Board	×	○	○	○	○	○
Electronic Parts	×	○	○	○	○	○
Brass Screw	×	○	○	○	○	○
Aluminum Die Casting	×	○	○	○	○	○

This table has been prepared in accordance with the provisions outlined in SJ/T 11364.

○: Indicates that said hazardous substance contained in all of the homogeneous materials for this part is below or equal to the limit requirement of GB/T 26572.

×: Indicates that said hazardous substance contained in at least one of the homogeneous materials used for this part is above the limit requirement of GB/T 26572.

Note:

This product complies with EU RoHS directives. In this table, "×" indicates that hazardous substances that are exempt from EU RoHS directives are contained.

5.6 Safe Disable Input

This section gives precautions to support the Safe Disable input. Contact the manufacturer for more information.

Figure 5.20 TUV Mark

The TUV mark identifies that the product complies with the safety standards.

The safety function complies with the following standards.

Table 5.21 Applied Safety Standards and Unified Standards

Safety Standards	Unified Standards
Functional Safety	IEC/EN 61508:2010 (SIL3)
	IEC 62061:2005/AMD2:2015 (SILCL3) EN 62061:2005/A2:2015 (SILCL3) IEC 61800-5-2:2016 (SIL3) EN 61800-5-2:2017 (SIL3)
Machine Safety	ISO/EN ISO 13849-1:2015 (Cat.3, PL e)
EMC	IEC 61000-6-7:2014 EN 61000-6-7:2015 IEC/EN 61326-3-1:2017
LVD	IEC 61800-5-1:2007/AMD1:2016 EN 61800-5-1:2007/A1:2017

Note:

SIL = Safety Integrity Level.

◆ Safe Disable Specifications

The Safe Disable input provides the stop function that complies with "Safe Torque Off" as specified by IEC/EN 61800-5-2. The Safe Disable input meets the requirements of ISO/EN ISO 13849-1 and IEC/EN 61508. It also has a safety status monitor to detect safety circuit errors.

When you install the drive as a component in a system, you must make sure that the system complies with the applicable safety standards.

Table 5.22 Safe Disable Specifications

Item	Description
Input/Output	• Input: 2 Safe Disable input (H1, H2) Signal ON level: 18 Vdc to 28 Vdc Signal OFF level: -4 Vdc to +4 Vdc • Output: 1 MFDO safety monitor output for external device monitor (EDM)
Response time from when the input opens to when the drive output stops	3 ms or less
Response time from when the H1 and H2 terminal inputs open to when the EDM signal operates	30 ms or less
Failure probability in Less frequent operation request mode	PFD = $1.38E^{-5}$
Failure probability in Frequent operation request mode or continuous mode	PFH = $3.35E^{-9}$
Performance level	The Safe Disable input complies with the performance level requirements of EN ISO 13849-1.
HFT (hardware fault tolerance)	N = 1
Type of subsystem	Type B
$MTTF_D$	High
DCavg	Medium
Mission time	10 years

EDM = External Device Monitoring

PFD = Probability of Failure on Demand

PFH = Probability of Dangerous Failure per Hour

◆ Safety Precautions

DANGER! *Sudden Movement Hazard. When you use the Safe Disable function in the safety system of a machine, do a full risk assessment for the system to make sure that all parts of the system comply with applicable safety standards. Incorrect application of the Safe Disable function can cause serious injury or death.*

DANGER! *Sudden Movement Hazard. If the output circuit of the drive is damaged and the Safe Disable function turns OFF the drive output to a permanent magnet (PM) motor, the motor can rotate 180 electrical degrees. Prevent damage to equipment and injury to personnel during this condition. Sudden motor movement can cause serious injury or death. It is possible for current to flow through the motor winding in these conditions.*

DANGER! *Electrical Shock Hazard. You cannot depend on the Safe Disable function to prevent electrical shock. Disconnect all power to the drive and wait for the time specified on the warning label before you remove covers. Check the drive for dangerous voltages before servicing or repair work. If you do work on the drive when it is energized and there is no cover over the electronic circuits, it can cause serious injury or death.*

WARNING! *Sudden Movement Hazard. Although the Safe Disable function is in operation, gravity or other external forces in the vertical axis can move the motor. Incorrect application of the Safe Disable function can cause serious injury or death.*

WARNING! *Sudden Movement Hazard. Do not use the drive output signals to control external holding brakes or dynamic brakes for functional safety. Use a system that conforms to the functional safety requirements. Incorrect application of the Safe Disable function can cause serious injury or death. Systems that use drive output signals (including EDM) for safety are not safe because drive output signals are not safety components.*

WARNING! *Sudden Movement Hazard. Connect the Safe Disable inputs to the devices as specified by the safety requirements. If you connect the Safe Disable inputs incorrectly, it can cause serious injury or death.*

WARNING! *Sudden Movement Hazard. To use the Safe Disable inputs, remove the jumpers between terminals H1-HC and H2-HC. If the Safe Disable circuit does not work correctly, it can cause serious injury or death.*

WARNING! *Sudden Movement Hazard. When you clear the Safe Disable input, make sure that the Safe Disable Monitor output operates correctly as the specification for Safe Disable function. If the Safe Disable circuit does not operate correctly, it can cause serious injury or death.*

WARNING! *Sudden Movement Hazard. Regularly examine the Safe Disable input and all other safety features. A system that does not operate correctly can cause serious injury or death.*

WARNING! *Sudden Movement Hazard. Only let approved personnel who know about the drive, instruction manual, and safety standards wire, examine, and maintain the Safe Disable input. If personnel are not approved, it can cause serious injury or death.*

WARNING! *Sudden Movement Hazard. Only use the Safe Disable Monitor (multi-function output terminal set to the EDM function) to monitor the Safe Disable status or to find a malfunction in the Safe Disable inputs. The monitor output is not a safety output. If you use the Safe Disable Monitor incorrectly, it can cause death or serious injury.*

Note:

- When you use a drive with a built in safety function, you must replace it 10 years after first use.
- A maximum of 3 ms will elapse from when terminals H1 or H2 shut off until the drive switches to the “Safe Torque Off” status. Set the OFF status for terminals H1 and H2 to hold for at least 3 ms. The drive may not be able to switch to the “Safe Torque Off” status if terminals H1 and H2 are only open for less than 3 ms.

◆ Safe Disable Circuit

The Safe Disable circuit has two isolated channels (terminals H1 and H2) that stop the output transistors. The input can use the internal power supply of the drive.

Set the EDM function to one of the MFDO terminals *[H2-xx = E or 10E]* to monitor the status of the Safe Disable function. This is the “Safe Disable monitor output function”.

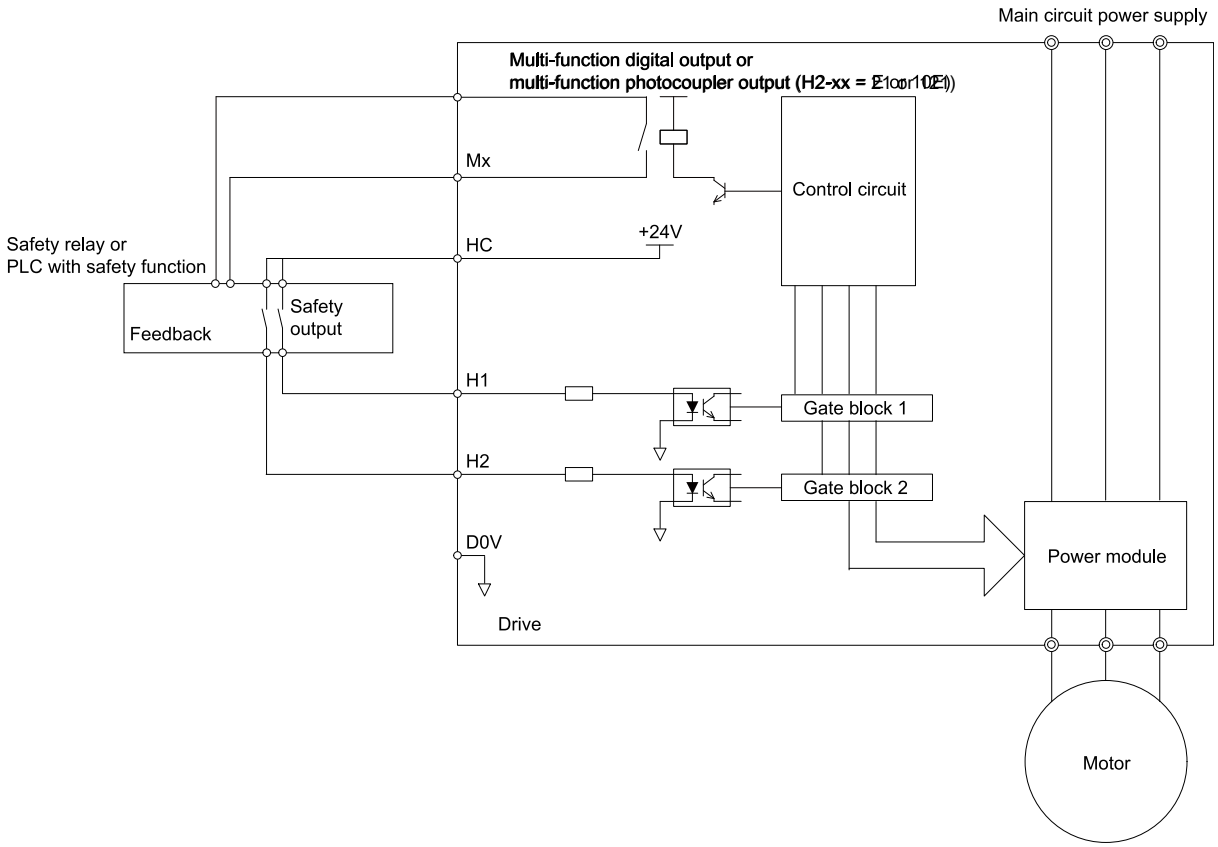

Figure 5.21 Safe Disable Function Wiring Example

◆ Connect Safe Disable Input Contacts to Multiple Drives

■ To Use the Drive Internal Power Supply

From the terminals HC-SN of drive 1, supply the power for the Safe Disable function for the applicable drives. These conditions limit the number of units to connect:

- Internal power supply capacity
- Number of MFDIs used
- Supply current to the external sensors

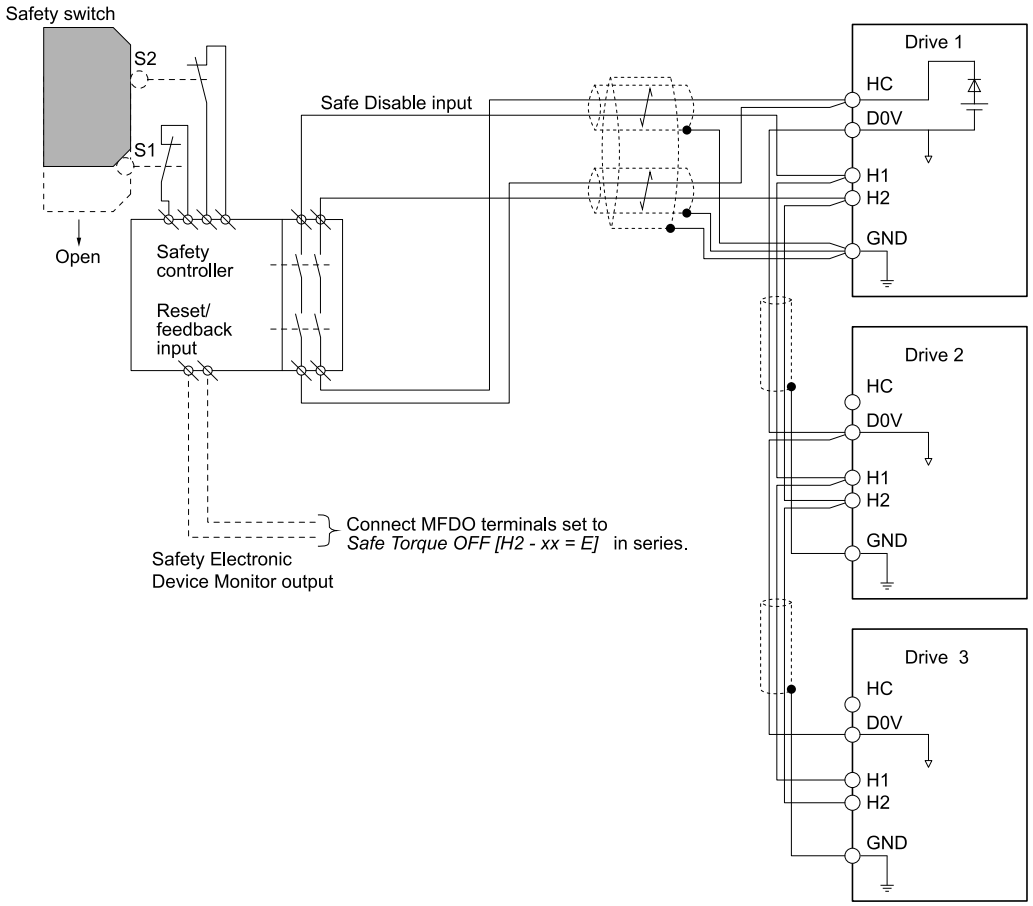

Figure 5.22 Connection Example to Use the Internal Power Supply

■ To Use 24 V External Power Supply

These conditions limit the number of units to connect:

- External power supply capacity
- Number of MFDIs used
- Supply current to the external sensors

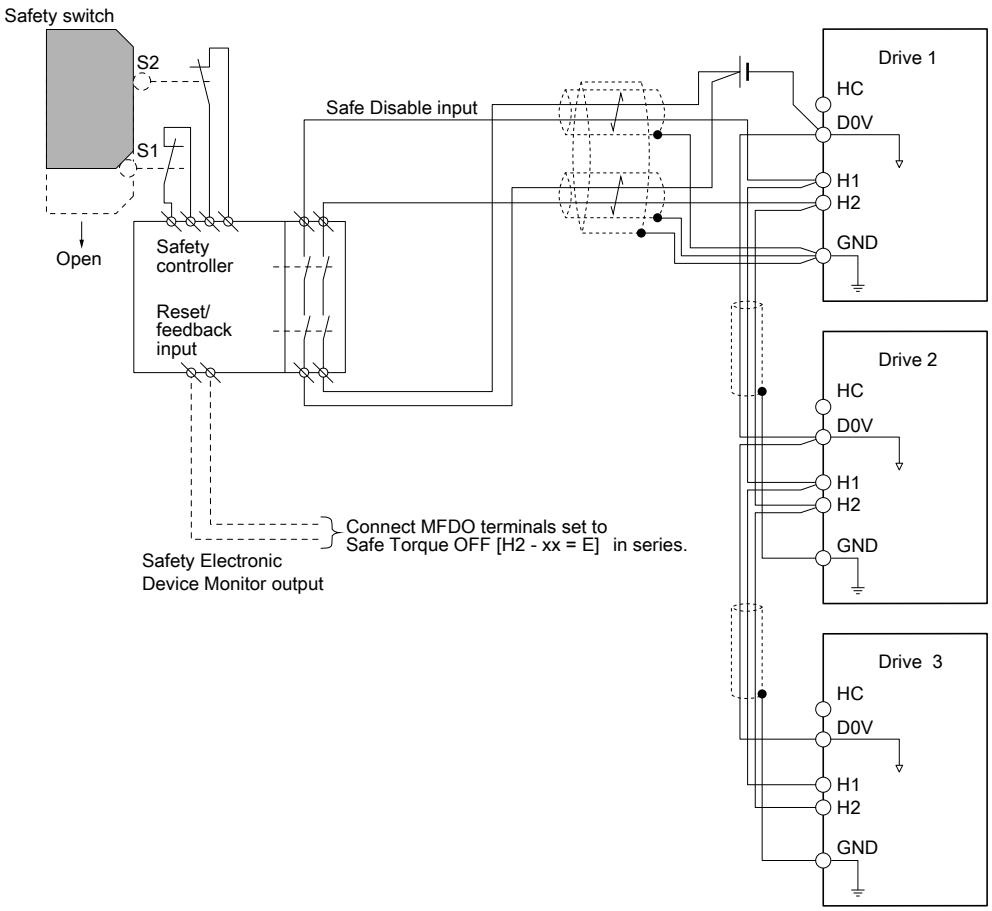

Figure 5.23 Connection Example to Use 24 V External Power Supply

■ Number of possible units to connect

Power Supply	Digital Inputs	24 V Output	Number of Drive Units
Internal power supply (Drive 1)	Yes (7-channel input)	Yes *1	1
		No	13
	No	Yes *1	4
		No	17
External power supply	-		Different for different external power supply capacities *2

*1 This is when you use a maximum of 150 mA.
*2 24 V, 12 mA is necessary for each drive.

Use this formula to calculate the number of units to connect:

$$n = (Io_{max} - I_{MFDI} \times n_{MFDI} - I_{sensor}) / I_{safety}$$

- n: Number of units to connect
- Io_{max}: Maximum current that the power supply can supply (234 mA for the internal power supply)
- I_{MFDI}: Current consumed per MFDI (6 mA)
- n_{MFDI}: Maximum number of MFDIs that can be activated at the same time (maximum of 7-channel)
- I_{sensor}: Current externally supplied for sensor power supply (maximum of 150 mA)
- I_{safety}: Current consumed by Safe Disable terminals H1 and H2 (12 mA)

Note:
Round the values to the first decimal place.

◆ Enabling and Disabling the Drive Output (“Safe Torque Off”)

This is an example of drive operation when as the drive changes from the "Safe Torque Off" status to usual operation.

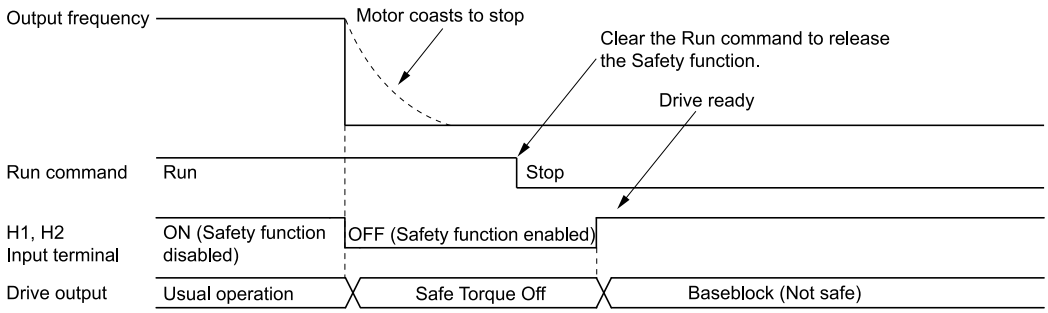

Figure 5.24 Safe Disable Operation

■ Switching from Usual Operation to “Safe Torque Off”

Turn OFF (open) safety input terminal H1 or H2 to enable the Safe Disable function. When the Safe Disable function is enabled while the motor is operating, the drive output and motor torque turn off and the motor always coasts to stop. The *b1-03 [Stopping Method Selection]* setting does not have an effect on the stopping method.

The “Safe Torque Off” status is only possible with the Safe Disable function. Clear the Run command to stop the drive. Turning off drive output (a baseblock condition) ≠ “Safe Torque Off”.

Note:
- When it is necessary to ramp to stop the motor, do not turn off terminals H1 and H2 until the motor fully stops. This will prevent the motor from coasting to stop during usual operation.
- A maximum of 3 ms will elapse from when terminals H1 or H2 shut off until the drive switches to the "Safe Torque Off" status. Set the OFF status for terminals H1 and H2 to hold for at least 3 ms. The drive may not be able to switch to the “Safe Torque Off” status if terminals H1 and H2 are only open for less than 3 ms.

■ Going from “Safe Torque Off” to Usual Operation

The safety input will only release when there is no Run command.

- During Stop
  When the Safe Disable function is triggered during stop, close the circuit between terminals H1-HC and H2-HC to disable “Safe Torque Off”. Enter the Run command after the drive stops correctly.
- During Run
  When the Safe Disable function is triggered during run, close the circuit between terminals H1-HC and H2-HC to disable “Safe Torque Off” after clearing the Run command. Enter the Stop command, then enter the Run command when terminals H1 and H2 are ON or OFF.

◆ Safe Disable Monitor Output Function and Keypad Display

Table 5.23 Safe Disable Input and External Device Monitor (EDM) Terminal Status

Input Channel Status		Safety Monitor Output Status		Drive Output Status	Keypad Display	READY LED	Modbus Register 0020H	
Input 1 (H1-HC)	Input 2 (H2-HC)	MFDO Terminal (H2-xx = E)	MFDO Terminal (H2-xx = 10E)				bit C	bit D
ON (Close the circuit)	ON (Close the circuit)	OFF	ON	Baseblock (Drive ready)	Normally displayed	READY: Illuminated	0	0
OFF (Open)	ON (Close the circuit)	OFF	ON	Safety status (STo)	SToF (Flashing)	ALM/ERR: Flashing	1	0
ON (Close the circuit)	OFF (Open)	OFF	ON	Safety status (STo)	SToF (Flashing)	ALM/ERR: Flashing	1	0
OFF (Open)	OFF (Open)	ON	OFF	Safety status (STo)	STo (Flashing)	READY: Flashing	0	1

■ Safety Function Status Monitor

The drive Safety monitor output sends a feedback signal about the status of the Safety function. The Safety monitor output is one of the possible settings available for the MFDO terminals. If there is damage to the Safe Disable circuit, a controller (PLC or safety relay) must read this signal as an input signal to hold the “Safe Torque Off” status. This will help verify the condition of the safety circuit. Refer to the manual for the safety device for more information about the Safety function.

It is possible to switch polarity of the Safety monitor output signal with the MFDO function settings. Refer to Table 5.23 for setting instructions.

■ Keypad Display

If the two input channels are OFF (Open), the keypad will flash *STo [Safe Torque OFF]*.

If there is damage to the Safe disable circuit or the drive, the keypad will flash *SToF [Safe Torque OFF Hardware]* when one input channel is OFF (Open), and the other is ON (Short circuit). When you use the Safe disable circuit correctly, the keypad will not show *SToF*.

If there is damage to the drive, the keypad will show *SCF [Safety Circuit Fault]* when the drive detects a fault in the Safe disable circuit. Refer to the chapter on Troubleshooting for more information.

◆ Validating the Safe Disable Function

After you replace parts or do maintenance on the drive, complete all necessary wiring to start the drive, then follow these steps to test the Safe Disable input. Keep a record of the test results.

1. When the two input channels are OFF (Open), make sure that the keypad flashes *STo [Safe Torque OFF]*, and make sure that the motor is not running.
2. Monitor the ON/OFF status of the input channels and make sure that MFDO set to the EDM function operates as shown in Table 5.23.
   If one or more of the these items are true, the ON/OFF status of the MFDO may not display correctly on the keypad.
   - Incorrect parameter settings.
   - A problem with an external device.
   - The external wiring has a short circuit or is disconnected.
   - There is damage to the device.

   Find the cause and repair the problem to correctly display the status.
3. Make sure that the EDM signal operates during usual operation as shown in Table 5.23.

6

Network Communications

6.1 Safety Precautions 188
6.2 Field Bus Network Support 189
6.3 Modbus Communications 190

6.1 Safety Precautions

⚠DANGER

Do not ignore the safety messages in this manual.

If you ignore the safety messages in this manual, it will cause serious injury or death. The manufacturer is not responsible for injuries or damage to equipment.

6.2 Field Bus Network Support

You can use the PLC to control and monitor the drive through the network. The drive has a standard RS-485 interface (Modbus communications). Install a separately sold communication option on the drive to support other network communications.

◆ Available Communication Options

Contact the manufacturer or your nearest sales representative to order a communication option.

Table 6.1 Available Field Bus Network

Type of Communications	Option model
EtherCAT	SI-ES3
PROFINET	SI-EP3
EtherNet/IP	SI-EN3

6.3 Modbus Communications

This section gives detailed information about the parameters, error codes and communication procedures for Modbus communications.

◆ Configure Master/Slave

You can use the Modbus protocol for serial communication with programmable controllers (PLC).

The Modbus communication uses one master (PLC) and a maximum of 31 slave drives. Serial communications usually starts with a signal from the master to the slave drives.

A slave drive that receives a command from the master does the specified function and then sends a response back to the master. You must set the address number for each slave drive before you start signal communications to make sure that the master uses the correct address numbers.

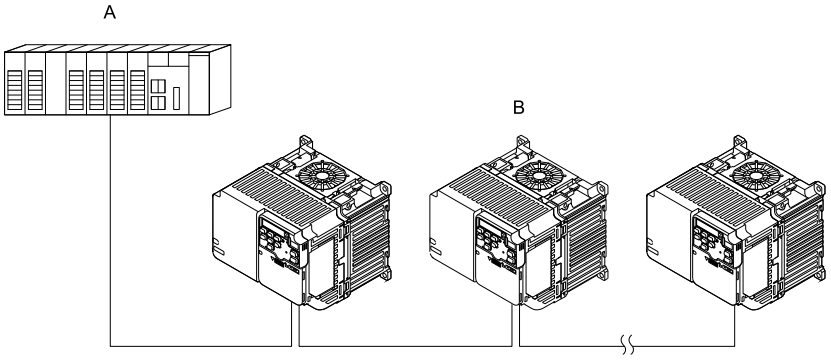

A - Master (PLC) **B - Slave (drive)**

Figure 6.1 PLC and Drive Connection Example

◆ Communication Specifications

Table 6.2 Modbus Specifications

Item	Specification
Interface	RS-485
Synchronization method	Asynchronous (start-stop synchronization)
Communication parameter	Communications speed:1.2, 2.4, 4.8, 9.6, 19.2, 38.4, 57.6, 76.8, 115.2 kbps
	Data length: 8 bit (fixed)
	Parity: even, odd, none
	Stop bit 1 bit (fixed)
Communication protocol	Modbus standard (RTU mode only)
Number of possible units to connect	Maximum: 31 units

◆ Communication with the PLC

This section gives information about the settings for the termination resistor and how to connect to Modbus communications. Modbus communications uses an RS-485 interface (2-wire sequence).

■ Connect Communications Cable

Use this procedure to start communication between the PLC and drive.

1. De-energize the drive then connect the communications cable to the PLC and the drive. The drive uses terminal TB4 for Modbus communications.

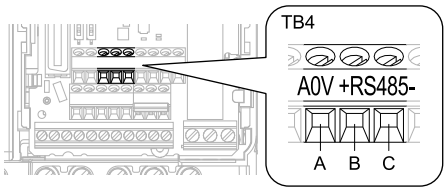

A - Terminal A0V: Shield ground
B - Terminal RS485+: Communication input/output (+)
C - Terminal RS485-: Communication input/output (-)

Figure 6.2 Communications Cable Connection Terminal (TB4)

Note:
Isolate the communications wiring from the main circuit wiring and other high-power wiring Use shielded wires for the communications wiring and connect cable sheaths to the ground terminal of the drive. Incorrect wiring procedures could cause drive malfunction because of electrical interference.

2. Install the termination resistor on the network termination slave drive. Set DIP switch S2 to the ON position to enable the termination resistor on the drive.
3. Energize the drive.
4. Use the drive keypad to set the necessary communications parameters *H5-01 to H5-12*.
   - *H5-01 [Mbus Address]*
   - *H5-02 [Mbus BaudRate]*
   - *H5-03 [Mbus Parity]*
   - *H5-04 [Mbus Error Stop]*
   - *H5-05 [Mbus Fault Detection Selection]*
   - *H5-06 [Mbus Tx Wait Time]*
   - *H5-09 [Mbus CE Detect Time]*
   - *H5-10 [Mbus 0025H Unit Sel]*
   - *H5-11 [Mbus ENTER Command Mode]*
   - *H5-12 [Mbus Run Command Method Sel]*
5. De-energize the drive and wait for the keypad display to turn off.
6. Energize the drive.

The drive is prepared to start communication with the PLC.

■ Set the Termination Resistor

You must enable the termination resistor on the slave terminal of the drive to use Modbus communications.
Use DIP switch S2 on the terminal block to enable and disable the built-in termination resistor.

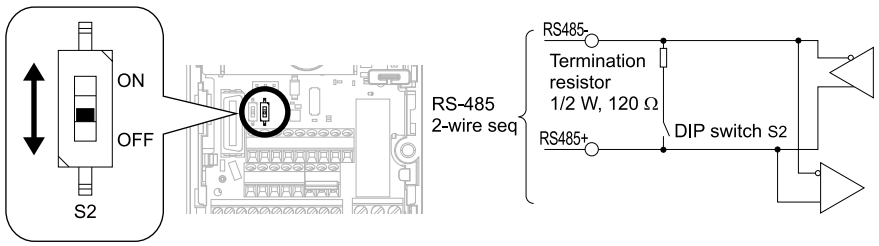

Figure 6.3 Modbus Communication Terminal and DIP Switch S2

Use the tip of a tweezers or a jig with a tip width of 0.8 mm (0.03 in) to set the DIP switch. When you install the drive at the end of the communication line, set DIP switch S2 to ON. Set DIP switch S2 to OFF on all other drives.

■ Wiring Diagram for More than One Drive

This is the correct wiring when you use more than one drive with Modbus communications.

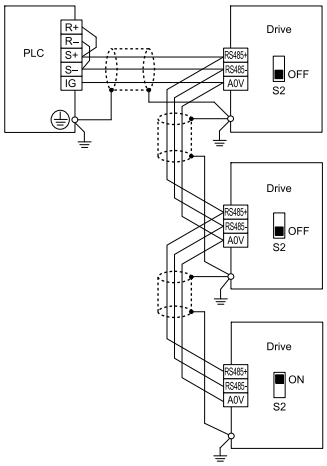

Figure 6.4 Wiring Diagram for More than One Drive

Note:

1. Set DIP switch S2 to the ON position on the last drive of the Modbus communication network to enable the termination resistor.
2. When you remove the shield from the ground terminal, it can make the communication quality better.

◆ Modbus Drive Operations

Drive parameters will apply to the settings when the drive is running during Modbus communications. This section gives information about the available functions and their related parameters.

■ Executable Functions

A PLC can do these operations with Modbus communications. Parameter settings (except *H5-xx*) do not have an effect on the availability of these operations.

- Monitor the drive status and operate the drive
- Set and view parameters
- Fault Reset Procedure
- Multi-function input settings
  The input command from Modbus communications and MFDI terminals (DI1 to DI7) are linked by a logical OR operation.

■ Drive Control

Select the external command that sets the frequency references and motor run/stop with Modbus communications. Use the following information to set the parameters as specified by the application.

Table 6.3 Necessary Parameter Settings for Drive Control from Modbus

LOCAL Control Selected	No.	Name	Setting Value
External reference 1	b1-01	Freq. Ref. Sel. 1	*2 [Modbus]*
	b1-02	Run Comm. Sel 1	*2 [Modbus]*
External reference 2	b1-15	Freq. Ref. Sel. 2	*2 [Modbus]*
	b1-16	Run Comm. Sel 2	*2 [Modbus]*

For more information about operation mode selection, refer to *b1-01 [Freq. Ref. Sel. 1]* and *b1-02 [Run Comm. Sel 1]*. Refer to H1-xx = 9 [MFDI Function Select = Ext Ref 1/2] for more information about external command.

◆ Communications Timing

This section gives information about message timing.

To prevent overrun of the slave side, the master cannot send a message to the same drive for a selected length of time.

To prevent overrun of the master side, the slave cannot send a response message to the master for a selected length of time.

■ Command Message from Master to Slave

To prevent data loss and overrun, after the master receives a message from the slave, the master cannot send the same type of command message to the same slave for a selected length of time. The minimum wait time is different for each type of message.

Table 6.4 Minimum Wait Time to Send a Message

Command Type	Example	Minimum Wait Time
1	• Operation commands (Run command, stop command) • I/O settings • Reading the motor and parameter setting values	5 ms *1
2	Writing a parameter	50 ms *1
3	Writing of modified data with the Enter command	3 to 5 s *1

*1 When the drive receives a message in the minimum wait time, it does command type 1 and sends a response message. If the drive receives command type 2 or command type 3 messages in the minimum wait time, it will trigger a communications error or the drive will ignore the command.

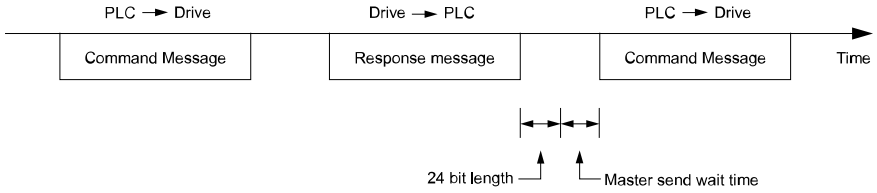

Figure 6.5 Minimum Wait Time to Send a Message

You must set the timer in the master to measure the length of time for the slave to respond to the master. If you set the timer, but the slave does not send a response message in a specified length of time, the master will send the message again.

■ Response Message from Slave

The slave receives the command message from the master then processes the data it received. The slave then waits for the time set in *H5-06 [Mbus Tx Wait Time]* then sends a response message to the master. If overrun occurs on the master, increase the wait time set in *H5-06*.

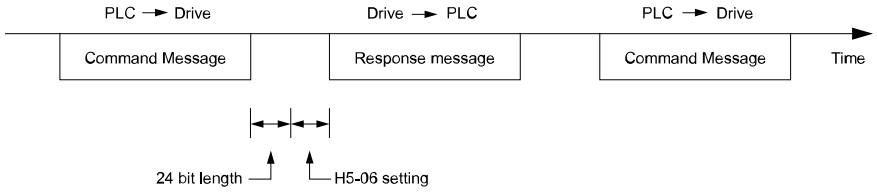

Figure 6.6 Response Wait Time

◆ Message Format

■ Communication Message Description

In Modbus communications, the master sends commands to the slave, then the slave responds. The master and slave send their messages in the following configuration.

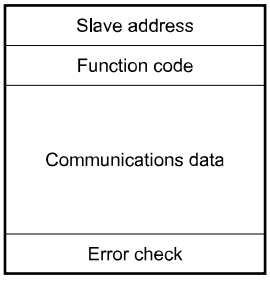

Figure 6.7 Message Format

The length of the data changes when the description of the command (function) changes.

■ Slave Address

Set the slave address of the drive to 00 to FF (Hex.). When the slave address is 00 (Hex), the master sends the command and all slaves receive the command.

The slave will not send a response message to the master.

■ Function Code

There are five function codes that set commands.

Table 6.5 Function Codes

Function Code (Hex.)	Subfunction Code (Hex.)	Function	Command Message		Response Message	
			Minimum Data Length (byte)	Maximum Data Length (byte)	Minimum Data Length (byte)	Maximum Data Length (byte)
03	-	Read the Description of Holding Register	8	8	7	37
08	-	Loopback Test	8	8	8	8
10	-	Writing to Multiple Holding Registers	11	41	8	8
5A	-	Writing to Multiple Holding Registers / Reading the Register Indicated	11	41	17	17
67	010D	Reading Contents of Non-Consecutive Holding Registers	10	248	10	248
	010E	Writing to Non-Consecutive Holding Registers	14	250	8	8

■ Communications Data

Communications data is a series of data that uses the combination of the communications register number and the data for these registers. The data length changes when the description of the command changes. For a loopback test, it switches to test code.

The communications register for the drive has a 2-byte length. Data that is written to the register for the drive is usually 2 bytes. Register data that is read from the drive is also 2 bytes.

■ Error Check

Error check uses the CRC-16 method to detect transmission errors. Use the procedure in this section to calculate CRC-16.

Command Data

When the drive receives data, it will make sure that there are no errors in the data. The drive uses the procedure below to calculate CRC-16, then compares that data with the CRC-16 value in the message. If the CRC-16 values do not agree, the drive will not execute a command message.

When you calculate CRC-16 in Modbus communications, make sure that you set the start value as FFFF (Hex.). All 16 bits must be 1.

Use this procedure to calculate CRC-16:

1. Make sure that the start value is FFFF (Hex.).
2. Calculate the FFFF (Hex.) start value and the XOR of the slave address (exclusive OR).
3. Move the step 2 results one column to the right. Do this shift until the carry bit is 1.
4. When the carry bit is 1, calculate XOR via the result from the above step 3 and A001 (Hex.).
5. Do steps 3 and 4 until the 8th shift to the right.
6. Use the result of step 5 to calculate the XOR and the data of the following messages (function code, register address, data). Do steps 3 to 5 until the last data, then calculate.
7. The result of the last right shift or the value of the last XOR calculation is the result for CRC-16.

Figure 6.8 lists examples of the CRC-16 calculation of slave address 02 (Hex.) and function code 03 (Hex.). The calculated results of CRC-16 for this section is D140 (Hex.).

Note:

The calculation example only gives information about some error checks with CRC-16. The drive will do the same error checks for the next data.

Description	Calculation	Overflow
Initial value (FFFF(Hex.))	1111 1111 1111 1111	
Address 02 (Hex.)	0000 0010	
XOR w initial value	1111 1111 1111 1101	
Shift 1	0111 1111 1111 1110	1
XOR w A001 (Hex.)	1010 0000 0000 0001	
XOR result	1101 1111 1111 1111	
Shift 2	0110 1111 1111 1111	1
XOR w A001 (Hex.)	1010 0000 0000 0001	
XOR result	1100 1111 1111 1110	
Shift 3	0110 0111 1111 1111	0
Shift 4	0011 0011 1111 1111	1
XOR w A001 (Hex.)	1010 0000 0000 0001	
XOR result	1001 0011 1111 1110	
Shift 5	0100 1001 1111 1111	0
Shift 6	0010 0100 1111 1111	1
XOR w A001 (Hex.)	1010 0000 0000 0001	
XOR result	1000 0100 1111 1110	
Shift 7	0100 0010 0111 1111	0
Shift 8	0010 0001 0011 1111	1
XOR w A001 (Hex.)	1010 0000 0000 0001	
XOR result	1000 0001 0011 1110	
Perform operations with next data (function code)		

Description	Calculation	Overflow
Function code 03 (Hex.)	0000 0011	
XOR w result	1000 0001 0011 1101	
Shift 1	0100 0000 1001 1110	1
XOR w A001 (Hex.)	1010 0000 0000 0001	
XOR result	1110 0000 1001 1111	
Shift 2	0111 0000 0100 1111	1
XOR w A001 (Hex.)	1010 0000 0000 0001	
XOR result	1101 0000 0100 1110	
Shift 3	0110 1000 0010 0111	0
Shift 4	0011 0100 0001 0011	1
XOR w A001 (Hex.)	1010 0000 0000 0001	
XOR result	1001 0100 0001 0010	
Shift 5	0100 1010 0000 1001	0
Shift 6	0010 0101 0000 0100	1
XOR w A001 (Hex.)	1010 0000 0000 0001	
XOR result	1000 0101 0000 0101	
Shift 7	0100 0010 1000 0010	1
XOR w A001 (Hex.)	1010 0000 0000 0001	
XOR result	1110 0010 1000 0011	
Shift 8	0111 0001 0100 0001	1
XOR w A001 (Hex.)	1010 0000 0000 0001	
XOR result	1101 0001 0100 0000	
CRC-16	1101 0001 0100 0000	
	D 1 4 0 (Lower) (Upper)	
Continue from here with next data.		

Figure 6.8 CRC-16 Calculation Example

Response Data

The drive does the CRC-16 calculation for the response message and makes sure that the data does not have errors. Make sure that the calculated value is the same value as the CRC-16 in the response message.

◆ Examples of Messages for Commands/Responses

The items in this section are examples of messages for commands/responses.

■ Read the Description of Holding Register

Uses function code 03 (Hex.) to read the contents of a maximum of 16 holding registers.

These are example messages when the drive reads status signal from the drive of slave 2, the error contents, fault contents, and frequency references.

Byte	Command Message			Response Message (normal)			Response Message (fault)		
			Setting Data (Hex.)			Setting Data (Hex.)			Setting Data (Hex.)
0	Slave address		02	Slave address		02	Slave address		02
1	Function code		03	Function code		03	Function code		83
2	Starting No.	Upper	00	Data Qty		08	Error code		03
3		Lower	20	First storage register	Upper	00	CRC-16	Upper	F1
4	Data Qty	Upper	00		Lower	65		Lower	31
5		Lower	04	Next storage register	Upper	00	-		
6	CRC-16	Upper	45		Lower	00	-		
7		Lower	F0	Next storage register	Upper	00	-		
8	-				Lower	00	-		
9	-			Next storage register	Upper	01	-		
10	-				Lower	F4	-		
11	-			CRC-16	Upper	AF	-		
12	-				Lower	82	-		

Figure 6.9 Message Example When Reading the Contents of Holding Register

■ Loopback Test

The loopback test uses function code 08 (Hex.) and returns the command message as a response message. This test checks communication between the master and slave. The test code and data can use desired values.

These are examples of messages given out when the loopback test is done with the drive of slave 1.

Byte	Command Message			Response Message (normal)		
			Setting Data (Hex.)			Setting Data (Hex.)
0	Slave address		01	Slave address		01
1	Function code		08	Function code		08
2	Test code	Upper	00	Test code	Upper	00
3		Lower	00		Lower	00
4	Data	Upper	A5	Data	Upper	A5
5		Lower	37		Lower	37
6	CRC-16	Upper	DA	CRC-16	Upper	DA
7		Lower	8D		Lower	8D

Figure 6.10 Message Example When Doing the Loopback Test

■ Writing to Multiple Holding Registers

You can write the data that you set to the number of holding registers set in function code 10 (hex). You must configure the number of the holding registers and each 8 higher bits and 8 lower bits in order in the command message for the write data. You can write to a maximum of 16 holding registers.

These are example messages when you use the PLC to set Forward run in the drive of slave 1 with a 60.00 Hz frequency reference.

Byte	Command message			Response message (when normal)			Response message (when there is a fault)		
			Setting data (Hex.)			Setting data (Hex.)			Setting data (Hex.)
0	Slave address		01	Slave address		01	Slave address		01
1	Function code		10	Function code		10	Function code		90
2	Starting No.	Upper	00	Starting No.	Upper	00	Error code		02
3		Lower	01		Lower	01	CRC-16	Upper	CD
4	Data Qty	Upper	00	Data Qty	Upper	00		Lower	C1
5		Lower	02		Lower	02	-		
6	Byte No.		04	CRC-16	Upper	10	-		
7	First data	Upper	00		Lower	08	-		
8		Lower	01	-			-		
9	Next data	Upper	17	-			-		
10		Lower	70	-			-		
11	CRC-16	Upper	6D	-			-		
12		Lower	B7	-			-		

Figure 6.11 Message Example When Writing to Multiple Holding Registers

Note:

The number of bytes set in the command message set the data quantity × 2 during the command message. The response message uses the same formula.

When you rewrite the parameter value with the write command through the *H5-11 [Mbus ENTER Command Mode]* setting, you must use the Enter command to save and enable the contents of the changes.

■ Reading from More than One Holding Register/Reading the Indicated Register

The drive uses function code 5A (Hex.) to write to more than one register, then it reads the contents of four holding registers at the same time.

The function for writing to more than one register is the same as the function for function code 10 (Hex.). You can write to a maximum of 16 holding registers.

The four holding registers to be read from are specified in *H5-25 to H5-28 [Mbus 5A RegX Selection]*.

This table shows example messages when you write to more than one holding register or when you read more than one command register, this register data is used for the examples:

- The drive for slave 1 is set for Forward run with a frequency reference of 60.00 Hz.

- The setting in *H5-25* to *H5-28* and the data in the specified holding registers are as follows.
  - *H5-25* = 0044H: *U1-05 [Motor Speed]* = 60.00 Hz (6000 = 1770H)
  - *H5-26* = 0045H: *U1-06 [Output Voltage Ref]* = 200.0 V (2000 = 07D0H)
  - *H5-27* = 0042H: *U1-03 [Output Current]* = 50% of drive rated current (100% = 8192, 50% = 4096 = 1000H)
  - *H5-28* = 0049H: *U1-10 [In Terminal Status]* = 00H

Table 6.6 Message Example When Reading from More than One Holding Register/Reading the Indicated Register

Byte	Command Message		Setting Data (Hex.)	Response Message (When Normal)		Setting Data (Hex.)	Response Message (When There is a Fault)		Setting Data (Hex.)
0	Slave address		01	Slave address		01	Slave address		01
1	Function code		5A	Function code		5A	Function code		DA
2	Starting No.	Upper	00	Register status		0F	Register status		0F
3		Lower	01	Data in holding register 1 selected with *H5-25*	Upper	17	Data in holding register 1 selected with *H5-25*	Upper	17
4	Data Quantity	Upper	00		Lower	70		Lower	70
5		Lower	02	Data in holding register 2 selected with *H5-26*	Upper	07	Data in holding register 2 selected with *H5-26*	Upper	07
6	Byte No.		04		Lower	D0		Lower	D0
7	First data	Upper	00	Data in holding register 3 selected with *H5-27*	Upper	10	Data in holding register 3 selected with *H5-27*	Upper	10
8		Lower	01		Lower	00		Lower	00
9	Next data	Upper	17	Data in holding register 4 selected with *H5-28*	Upper	00	Data in holding register 4 selected with *H5-28*	Upper	00
10		Lower	70		Lower	00		Lower	00
11	CRC-16	Upper	4F	Starting No.	Upper	00	Error code		02
12		Lower	43		Lower	01	CRC-16	Upper	E9
13	-			Data Quantity	Upper	00		Lower	6C
14	-				Lower	02	-		
15	-			CRC-16	Upper	AC	-		
16	-				Lower	D0	-		

Note:
The number of bytes set in the command message set the data quantity × 2 during the command message.

Register status	
bit 0	Data in register 1 selected with *H5-25* 1: Successfully read the register 0: Register read error
bit 1	Data in register 2 selected with *H5-26* 1: Successfully read the register 0: Register read error
bit 2	Data in register 3 selected with *H5-27* 1: Successfully read the register 0: Register read error
bit 3	Data in register 4 selected with *H5-28* 1: Successfully read the register 0: Register read error
bit 4	Not used
bit 5	Not used
bit 6	Not used
bit 7	Not used

When you rewrite the parameter value with the write command through the *H5-11 [Mbus ENTER Command Mode]* setting, you must use the Enter command to save and enable the contents of the changes.

■ Reading the Contents of Non-Consecutive Holding Registers

The drive uses function code 67 (Hex.) and subfunction code 010D (Hex.) to read data with a maximum of 120 holding registers.

You must give the holding register number from which to read separately.

This table shows example messages when you read the frequency reference and torque limit from the drive for slave 1, this register data is used for the examples:

- 0024H: *U1-01 [Frequency Reference]* = 60.00 Hz (6000 = 1770H)
- 0028H: *U1-09 [Torque Reference]* = 100.0% (1000 = 03E8H)

Table 6.7 Message Example When Reading the Contents of Non-Consecutive Holding Registers

Byte	Command Message			Response Message (When Normal)			Response Message (When There is a Fault)		
			Setting Data (Hex.)			Setting Data (Hex.)			Setting Data (Hex.)
0	Slave address		01	Slave address		01	Slave address		01
1	Function code		67	Function code		67	Function code		E7
2	Subfunction code	Upper	01	Subfunction code	Upper	01	Error code		02
3		Lower	0D		Lower	0D	CRC-16	Upper	EA
4	Data Quantity	Upper	00	Byte No.	Upper	00		Lower	31
5		Lower	02		Lower	04	-		
6	Holding register 1 No.	Upper	00	Holding register 1 data	Upper	17	-		
7		Lower	24		Lower	70	-		
8	Holding register 2 No.	Upper	00	Holding register 2 data	Upper	03	-		
9		Lower	28		Lower	E8	-		
10	CRC-16	Upper	8B	CRC-16	Upper	47	-		
11		Lower	29		Lower	ED	-		

Note:

The number of bytes set in the command message set the data quantity × 2 during the command message.

■ Writing to Non-Consecutive Holding Registers

The drive uses function code 67 (Hex.) and subfunction code 010E (Hex.) to read data with a maximum of 60 holding registers.

You must give the holding register number from which to write separately.

This table shows example messages when you write the frequency reference and torque limit from the drive for slave 1, this register data os used for the examples:

- 0002H: Frequency Reference = 60.00 Hz (6000 = 1770H)
- 0004H: Torque Limit = 150.0% (1500 = 05DCH)

Table 6.8 Message Example When Writing to Non-Consecutive Holding Registers

Byte	Command Message			Response Message (When Normal)			Response Message (When There is a Fault)		
			Setting Data (Hex.)			Setting Data (Hex.)			Setting Data (Hex.)
0	Slave address		01	Slave address		01	Slave address		01
1	Function code		67	Function code		67	Function code		E7
2	Subfunction code	Upper	01	Subfunction code	Upper	01	Error code		02
3		Lower	0E		Lower	0E	CRC-16	Upper	EA
4	Data Quantity	Upper	00	Data Quantity	Upper	00		Lower	31
5		Lower	02		Lower	02	-		
6	Byte No.	Upper	00	CRC-16	Upper	D5	-		
7		Lower	04		Lower	FC	-		
8	Holding register 1 No.	Upper	00	-			-		
9		Lower	02	-			-		
10	Holding register 1 data	Upper	17	-			-		
11		Lower	70	-			-		
12	Holding register 2 No.	Upper	00	-			-		
13		Lower	04	-			-		

Byte	Command Message			Response Message (When Normal)		Response Message (When There is a Fault)	
			Setting Data (Hex.)		Setting Data (Hex.)		Setting Data (Hex.)
14	Holding register 2 data	Upper	05	-		-	
15		Lower	DC	-		-	
16	CRC-16	Upper	55	-		-	
17		Lower	59	-		-	

Note:

The number of bytes set in the command message set the data quantity × 2 during the command message.

When you rewrite the parameter value with the write command through the *H5-11 [Mbus ENTER Command Mode]* setting, you must use the Enter command to save and enable the contents of the changes.

◆ Enter Command

When you use Modbus communications to write parameters from the PLC to the drive, the *H5-11 [Mbus ENTER Command Mode]* setting sets the function to enable these parameters from the Enter command. This section gives information about the Enter command.

■ Types of Enter Commands

The drive supports the two Enter commands.

Table 6.9 Types of Enter Commands

Register No. (Hex.)	Description
0900	When you write parameter data to the EEPROM, you will enable the data on the RAM at the same time. This process saves the parameter changes until you de-energize the drive.
0910	This updates the data on the RAM, but does not write data to the EEPROM. This process saves the parameter changes until you de-energize the drive.

Write 0 to register number 0900 or 0910 (Hex.) to enable the Enter command. You can only write to these registers. If you read to these registers, it will cause an error.

Note:

- You can write the EEPROM to the drive a maximum of 100,000 times. Do not frequently execute the Enter command (0900 (Hex.)) that is written to EEPROM. The Enter command register is write-only. If this register is read, it will cause a Register Number Error (02 (Hex.)).
- When the command data or broadcast message is transmitted to the drive, the Enter command is not necessary.

◆ Self-Diagnostics

The drive can use Self-Diagnositcs to find the operation of the serial communications interface circuit. Self-Diagnostics connects the transmission terminal to the reception terminal on the control circuit. It then transmits the data sent by the drive and makes sure that the drive can communicate correctly.

1. Energize the drive.
2. Set *H1-06 = 7F [DI6 Function Selection = Comms Test]*.
3. De-energize the drive.

4. Connect a jumper between control circuit terminals DI6 and D0V.

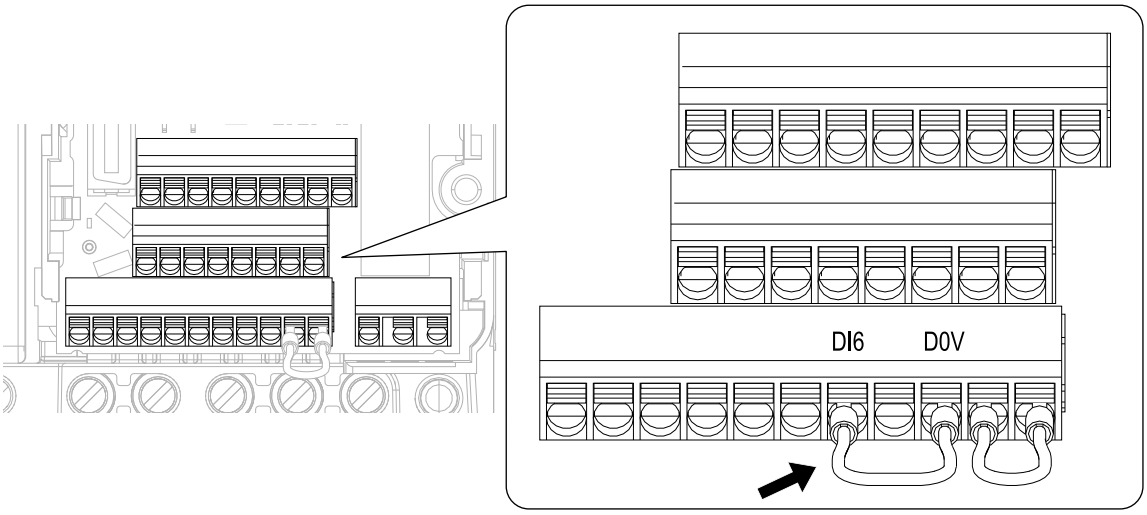

Figure 6.12 Self-Diagnostics Jumper Terminals

5. Energize the drive.
6. When normal, the keypad will show *PASS [Modbus Communications Test Mode Normal]*.
   When there is an error, the keypad will show *CE [Modbus Communications Error]*.
7. De-energize the drive.
8. Disconnect the wire jumper between terminals DI6 and D0V. Set terminal DI6 to its initial function.

Self-Diagnostics is complete and the drive returns to its usual function.

◆ Communications Data Table

The communication data types are command data, monitor data, and broadcast message.

■ Command Data

You can read and write command data.

Note:
Set the reserved bit to 0. Do not write the data in the reserved register or the monitor register.

Table 6.10 Modbus Communications Command Data

Register No. (Hex.)	Description	
0000	Reserved	
0001	Run command, multi-function input command	
	bit 0	When *H5-12 = 0*, Forward run/stop 1: Forward run, 0: Stop When *H5-12 = 1*, run/stop 1: Run, 0: Stop
	bit 1	When *H5-12 = 0*, Reverse run/stop 1: Reverse run, 0: Stop When *H5-12 = 1*, Forward/Reverse run 1: Reverse, 0: Forward run
	bit 2	External fault 1: EF0 [Option Card External Fault]
	bit 3	Fault Reset 1: Reset command
	bit 4	Multi-function input 1 When the multi-function input command is *H1-01 = 1 [Forward Run]*, bit 4 is "ComRef." **Note:** When you switch the bit ON as ComRef, the frequency reference source changes to Modbus communications. When you connect a communication option to the drive, the frequency reference source gives priority to the communications option.
	bit 5	Multi-function input 2 When the multi-function input command is *H1-02 = 2 [Reverse Run]*, bit 5 is "ComCtrl." **Note:** When you switch the bit ON as ComCtrl, the Run Command source changes to Modbus communications. When you connect a communication option to the drive, the Run Command source gives priority to the communications option.
	bit 6	Multi-function input 3
	bit 7	Multi-function input 4
	bit 8	Multi-function input 5
	bit 9	Multi-function input 6
	bit A	Multi-function input 7
	bit B - F	Reserved
0002	Frequency Reference	*o1-03 [FrqDisplay Unit Selection]* (unsigned) sets the units.
0003	Output voltage gain	Units: 0.1% Setting range: 20 (2.0%) to 2000 (200.0%), the default value at energize: 1000 (100.0%)
0004	Torque limit (0.1% signed)	
0005	Torque compensation (0.1% signed)	
0006	PID setpoint (0.01% signed)	
0007	Setting for the multi-function analog monitor output terminal AO (10 V/4000 (Hex.))	
0008	Reserved	

Register No. (Hex.)	Description	
0009	MFDO setting	
	bit 0	MFDO (terminal NO-CM) 1: ON, 0: OFF
	bit 1	Multi-function photocoupler output 1 (terminal DO1-O1C) 1: ON, 0: OFF
	bit 2	Multi-function photocoupler output 2 (terminal DO2-O2C) 1: ON, 0: OFF
	bit 3 - F	Reserved
000A	Pulse train output (Units: 1/1 Hz, setting range: 0 to 32000)	
000B - 000E	Reserved	
000F	Command selection setting	
	bit 0	Reserved
	bit 1	Input for the PID setpoint 1: Enables target values from Modbus
	bit 2	Torque Limit Input 1: Enables setting values from Modbus
	bit 3	Torque Compensation Input 1: Enables setting values from Modbus
	bit 4	Reserved
	bit 5	PID feedback from the Modbus 1: Enables PID feedback (15FF (Hex.)) from Modbus
	bit 6 - B	Reserved
	bit C	Terminal DI5 input of broadcast message 1: Enabled, 0: Disabled
	bit D	Terminal DI6 input of broadcast message 1: Enabled, 0: Disabled
	bit E	Terminal DI7 input of broadcast message 1: Enabled, 0: Disabled
	bit F	Reserved
0010 - 001F	Reserved	
15C0	bit 0	Extended multi-function input command 1
	bit 1	Extended multi-function input command 2
	bit 2	Extended multi-function input command 3
	bit 3 - F	Reserved
3004	Time Setting Setting range: 0000 to 2359 (decimal), the default value at energize: 0000 Set the hour and the minute in HHMM format. • HH: 00 to 23 (decimal) • MM: 00 to 59 (decimal)	

Register No. (Hex.)	Description
3005	Year and Day Setting Setting range: 1600 to 9906 (decimal), the default value at energize: 1600 Set the year and the day of the week in YYDW format. • YY: the last two digits of the year from 16 to 99 (decimal) • DW: the day of the week – Sunday: 00 – Monday: 01 – Tuesday: 02 – Wednesday: 03 – Thursday: 04 – Friday: 05 – Saturday: 06
3006	Date Setting Setting range: 101 to 1231 (decimal), the default value at energize: 101 Set the month and the date in MMDD format. • MM: 01 to 12 (decimal) • DD: 01 to 31 (decimal)
3007	Set the Date Information Setting range: 0 to 8 (decimal), the default value at energize: 8 Set the values specified in 3004H to 3006H as the date and time. • Command Data: 1 • Response Data: 0 (normal), 8 (fault)

■ Monitor Data

You can only read monitor data.

Table 6.11 Monitor Data for Modbus Communication

Register No. (Hex.)	Description	
0020	Drive Status 1	
	bit 0	During Run 1: During run, 0: During stop
	bit 1	During reverse 1: During reverse, 0: Forward run
	bit 2	Drive ready 1: Ready, 0: Not ready
	bit 3	Fault 1: Fault
	bit 4	Data Setting Error 1: oPExx error
	bit 5	MFDO (terminal NO/NC-CM) 1: ON, 0: OFF
	bit 6	Multi-function photocoupler output 1 (terminal DO1-O1C) 1: ON, 0: OFF
	bit 7	Multi-function photocoupler output 2 (terminal DO2-O2C) 1: ON, 0: OFF
	bit 8 - D	Reserved
	bit E	ComRef status 1: Enabled
	bit F	ComCtrl status 1: Enabled
0021	Fault Description 1	
	bit 0	oC [Overcurrent], GF [Ground Fault]
	bit 1	ov [Overvoltage]
	bit 2	oL2 [Drive Overload]
	bit 3	oH1 [Heatsink Overheat], oH2 [External Overheat (H1-XX=7D)]
	bit 4	rH [Braking Resistor Overheat], rr [Dynamic Braking Transistor Fault]
	bit 5	Reserved
	bit 6	FbL [PID Feedback Loss], FbH [Excessive PID Feedback]
	bit 7	EF0 [Option Card External Fault], EF1 to EF7 [External Fault]
	bit 8	CPFxx [Hardware Fault] **Note:** Includes *oFx*.
	bit 9	oL1 [Motor Overload], oL3, oL4 [Overtorque Detection 1/2], UL3, UL4 [Undertorque Detection 1/2]
	bit A	PGo [Encoder (PG) Feedback Loss], oS [Overspeed], dEv [Speed Deviation]
	bit B	During Uv [Undervoltage] detection
	bit C	Uv1 [DC Bus Undervoltage], Uv2 [Control Power Undervoltage], Uv3 [Soft Charge Answerback Fault]
	bit D	LF [Output Phase Loss], PF [Input Phase Loss]
	bit E	CE [Modbus Communication Error], bUS [Option Communication Error]
	bit F	Reserved

Register No. (Hex.)	Description	
0022	Fault Contents	
	bit 0	1: During data writing, during motor switching
	bit 1	Reserved
	bit 2	
	bit 3	1: Upper/Lower Limit Fault
	bit 4	1: Data Integrity Fault
	bit 5	1: During EEPROM writing
	bit 6	0: EEPROM writing 1: Change data only on the RAM **Note:** Enabled when *H5-17 = 2 [ENTER@CPU Busy Response = Write RAM Only]*.
	bit 7 - F	Reserved
0023	U1-01 [Frequency Reference] **Note:** *o1-03 [FrqDisplay Unit Selection]* sets the units.	
0024	U1-02 [Output Frequency] **Note:** *o1-03 [Frequency Display Unit Selection]* sets the units.	
0025	U1-06 [Output Voltage Ref] (units: 0.1 V) **Note:** Use *H5-10 [Mbus 0025H Unit Sel]* to change the setting unit.	
0026	U1-03 [Output Current] (units: 0.1 A)	
0027	U1-08 [Output Power]	
0028	U1-09 [Torque Reference]	
0029	Fault Description 2	
	bit 0	Reserved
	bit 1	GF [Ground Fault]
	bit 2	PF [Input Phase Loss]
	bit 3	LF [Output Phase Loss]
	bit 4	rH [Braking Resistor Overheat]
	bit 5	Reserved
	bit 6	oH4 [Motor Overheat Fault (PTC Input)]
	bit 7 - F	Reserved

Register No. (Hex.)	Description	
002A	Minor Fault Description 1	
	bit 0 - 1	Reserved
	bit 2	EF [FWD/REV Run Command Input Error]
	bit 3	bb [Baseblock]
	bit 4	oL3 [Overtorque 1]
	bit 5	oH [Heatsink Overheat]
	bit 6	ov [Overvoltage]
	bit 7	Uv [Undervoltage]
	bit 8	Reserved
	bit 9	CE [Modbus Communication Error]
	bit A	bUS [Option Communication Error]
	bit B	UL3/UL4 [Undertorque Detection 1/2]
	bit C	oH3 [Motor Overheat (PTC Input)]
	bit D	FbL [PID Feedback Loss], FbH [Excessive PID Feedback]
	bit E	Reserved
	bit F	CALL [Serial Comm Transmission Error]
002B	U1-10 [In Terminal Status]	
	bit 0	1: Control circuit terminal DI1 ON
	bit 1	1: Control circuit terminal DI2 ON
	bit 2	1: Control circuit terminal DI3 ON
	bit 3	1: Control circuit terminal DI4 ON
	bit 4	1: Control circuit terminal DI5 ON
	bit 5	1: Control circuit terminal DI6 ON
	bit 6	1: Control circuit terminal DI7 ON
	bit 7 - F	Reserved

Register No. (Hex.)	Description	
002C	Drive Status 2	
	bit 0	During Run 1: During Run
	bit 1	During zero speed 1: During zero speed
	bit 2	Speed agreement 1: During agreement
	bit 3	User-defined speed agreement 1: During agreement
	bit 4	Frequency Detection 1 1: Output frequency ≤ L4-01
	bit 5	Frequency Detection 2 1: Output frequency ≥ L4-01
	bit 6	Drive ready 1: Run ready
	bit 7	During low voltage detection 1: During detection
	bit 8	During baseblock 1: Drive output during baseblock
	bit 9	Frequency reference mode 1: No communication option, 0: Communication option
	bit A	Run command mode 1: No communication option, 0: Communication option
	bit B	During overtorque/undertorque 1, 2 detection
	bit C	Frequency reference loss 1: Loss
	bit D	Executing Auto-Restart 1: Restart Enabled
	bit E	Fault 1: Fault generated
	bit F	Modbus communications timeout 1: At Timeout
002D	U1-11 [Output Terminal Status]	
	bit 0	MFDO (terminal NO/NC-CM) 1: ON, 0: OFF
	bit 1	Multi-function photocoupler output 1 (terminal DO1-O1C) 1: ON, 0: OFF
	bit 2	Multi-function photocoupler output 2 (terminal DO2-O2C) 1: ON, 0: OFF
	bit 3 - F	Reserved
002E	Reserved	
002F	Frequency reference bias (Up 2/Down 2 function) (Units: 0.1%)	
0030	Reserved	
0031	U1-07 [DC Bus Voltage] (unit: 1 V)	
0032	U1-09 [Torque Reference] (unit: 1%)	
0033	Reserved	
0034	Product Code 1 (2-character ASCII code), Q2V = “0A”	
0035	Product Code 2 (2-character ASCII code), Q2V = “52”	
0036 - 0037	Reserved	
0038	PID Feedback: Unsigned, input is equivalent to 100%/ maximum output frequency (Units:0.1%)	

Register No. (Hex.)	Description	
0039	PID Input: Signed, ±100%/±maximum output frequency (Units:0.1%)	
003A	PID Output: Signed, ±100%/±maximum output frequency (Units:0.1%)	
003B - 003C	Reserved	
003D	Communications error description **Note:** The drive saves the description of the communications error until you reset the fault.	
	bit 0	CRC Error
	bit 1	Data Length Error
	bit 2	Reserved
	bit 3	Parity Error
	bit 4	Overrun Error
	bit 5	Framing Error
	bit 6	Timeout
	bit 7 - F	Reserved
003E	Output frequency	Units: min-1 or r/min **Note:** Set *E2-04, E4-04, E5-04, E9-08 [Motor Pole Count]*.
003F		0.01% units
0040 - 004A	Used with *[U1: STATUS]*. Refer to "*U Monitor*" for more information.	
004B	U1-12 [Drive Status]	
	bit 0	1: During Run
	bit 1	1: During zero speed
	bit 2	1: During reverse
	bit 3	1: During reset signal input
	bit 4	1: During speed agreement
	bit 5	1: Drive operation ready
	bit 6	1: Minor Fault
	bit 7	1: Fault
	bit 8	1: oPExx [Operation Error] generation
	bit 9	1: Recovery from momentary power loss, 0: Power recovery
	bit A	1: Motor 2 Selection
	bit B	Reserved
	bit E	ComRef status/ NetRef status
	bit F	ComCtrl status/ NetCtrl status
004C - 007E	Use with *U1-xx, U4-xx, U5-xx, U6-xx [Monitors]*. Refer to "*U Monitor*" for more information.	
007F	Minor fault code (Refer to "Minor fault description" for more information about the minor fault codes.)	
0080 - 0097	Use with *U2-xx, U3-xx [Monitors]*. Refer to "U Monitor" for more information, and refer to "Fault Trace/Fault History Descriptions" for more information about register values.	
0098 - 0099	U4-01 [Cumulative OpeTime] Example: When *U4-01 [Cumulative OpeTime] = 12345*, 0098 (Hex.) = 1234 and 0099 (Hex.) = 5.	
009A - 009B	U4-03 [Fan Oper.Time] Example: When *U4-03 [Fan Oper.Time] = 12345*, 009A (Hex.) = 1234 and 009B (Hex.) = 5.	
009C - 00AA	Reserved	

Register No. (Hex.)	Description	
00AB	Drive rated current **Note:** The unit of display is different for different models. 2001 to 2042, B001 to B018, 4001 to 4023: 0.01 A 2056 to 2082, 4031 to 4060: 0.1 A	
00AC	U1-05 [Motor Speed]	Units: min-1 or r/min **Note:** Set *E2-04, E4-04, E5-04, E9-08 [Motor Pole Count]*.
00AD		Units: 0.01%
00AE, 00AF	Reserved	
00B0	Option codes connected to CN5	The drive stores option codes in the register. SI-C3 = 5343 (Hex.) SI-EM3 = 1005 (Hex.) SI-EN3 = 1006 (Hex.) SI-EP3 = 1007 (Hex.) SI-ES3 = 1001 (Hex.) SI-ET3 = 1004 (Hex.) SI-N3 = 534E (Hex.) SI-P3 = 5350 (Hex.) SI-S3 = 5353 (Hex.) SI-T3 = 5354 (Hex.)
00B1 - 00B4	Reserved	
00B5	U1-16 [SFS Output Frequency]	Units: min-1 or r/min **Note:** Set *E2-04, E4-04, E5-04, E9-08 [Motor Pole Count]*.
00B6		Units: 0.01%
00B7	Frequency reference monitor	Units: min-1 or r/min **Note:** Set *E2-04, E4-04, E5-04, E9-08 [Motor Pole Count]*.
00B8		Units: 0.01%
00B9 - 00BE	Reserved	
00BF	Operation error number *xx* of *oPExx* is displayed.	
00C0	Fault Description 3	
	bit 0	Reserved
	bit 1	Uv1 [DC Bus Undervoltage]
	bit 2	Uv2 [Control Power Undervoltage]
	bit 3	Uv3 [Soft Charge Answerback Fault]
	bit 4	SC [Short Circuit/IGBT Failure]
	bit 5	GF [Ground Fault]
	bit 6	oC [Overcurrent]
	bit 7	ov [Overvoltage]
	bit 8	oH [Heatsink Overheat]
	bit 9	oH1 [Heatsink Overheat]
	bit A	oL1 [Motor Overload]
	bit B	oL2 [Drive Overload]
	bit C	oL3 [Overtorque Detection 1]
	bit D	oL4 [Overtorque Detection 2]
	bit E	rr [Dynamic Braking Transistor Fault]
	bit F	rH [Braking Resistor Overheat]

Register No. (Hex.)	Description	
00C1	Fault Description 4	
	bit 0	EF3 [External Fault (Terminal DI3)]
	bit 1	EF4 [External Fault (Terminal DI4)]
	bit 2	EF5 [External Fault (Terminal DI5)]
	bit 3	EF6 [External Fault (Terminal DI6)]
	bit 4	EF7 [External Fault (Terminal DI7)]
	bit 5 - 6	Reserved
	bit 7	oS [Overspeed]
	bit 8	dEv [Speed Deviation]
	bit 9	PGo [Encoder (PG) Feedback Loss]
	bit A	PF [Input Phase Loss]
	bit B	LF [Output Phase Loss]
	bit C	oH3 [Motor Overheat (PTC Input)]
	bit D	Reserved
	bit E	Err [EEPROM Write Error]
	bit F	oH4 [Motor Overheat Fault (PTC Input)]
00C2	Fault Description 5	
	bit 0	CE [Modbus Communication Error]
	bit 1	bUS [Option Communication Error]
	bit 2 - 3	Reserved
	bit 4	CF [Control Fault]
	bit 5	Reserved
	bit 6	EF0 [Option Card External Fault]
	bit 7	FbL [PID Feedback Loss]
	bit 8	UL3 [Undertorque Detection 1]
	bit 9	UL4 [Undertorque Detection 2]
	bit A	oL7 [High Slip Braking Overload]
	bit B - E	Reserved
	bit F	Hardware Fault (includes *oFx* fault)
00C3	Fault Description 6	
	bit 0 - 4	Reserved
	bit 5	LF2 [Output Current Imbalance]
	bit 6	STPo [Motor Step-Out Detected]
	bit 7	Reserved
	bit 8	E5 [MECHATROLINK Watchdog Timer Err]
	bit 9	Reserved
	bit A	SEr [Speed Search Retries Exceeded]
	bit B - F	Reserved

Register No. (Hex.)	Description	
00C4	Fault Description 7	
	bit 0	FbH [Excessive PID Feedback]
	bit 1	EF1 [External Fault (Terminal DI1)]
	bit 2	EF2 [External Fault (Terminal DI2)]
	bit 3	oL5 [Mechanical Weakening Detection 1]
	bit 4	UL5 [Mechanical Weakening Detection 2]
	bit 5	CoF [Current Offset Fault]
	bit 6 - 7	Reserved
	bit 8	qFL [Q2pack Fault]
	bit 9	qFL1 [EEPROM Memory Q2pack Data Error]
	bit A	qFL2 [Q2pack Fault 2]
	bit B	qFL3 [Q2pack Fault 3]
	bit C	Reserved
	bit D	rF [Braking Resistor Fault]
	bit E	boL [BrakingTransistor Overload Fault]
	bit F	Reserved
00C5	Fault Description 8	
	bit 0	LSo [Low Speed Motor Step-Out]
	bit 1	nSE [Node Setup Error]
	bit 2 - 9	Reserved
	bit A	dv7 [Polarity Judge Timeout]
	bit B - F	Reserved
00C6 - 00C7	Reserved	
00C8	Minor Fault Description 2	
	bit 0	Uv [Undervoltage]
	bit 1	ov [Overvoltage]
	bit 2	oH [Heatsink Overheat]
	bit 3	Overheat Alarm (oH2)
	bit 4	oL3 [Overtorque 1]
	bit 5	oL4 [Overtorque 2]
	bit 6	EF [FWD/REV Run Command Input Error]
	bit 7	bb [Baseblock]
	bit 8	EF3 [External Fault (Terminal DI3)]
	bit 9	EF4 [External Fault (Terminal DI4)]
	bit A	EF5 [External Fault (Terminal DI5)]
	bit B	EF6 [External Fault (Terminal DI6)]
	bit C	EF7 [External Fault (Terminal DI7)]
	bit D - E	Reserved
	bit F	oS [Overspeed]

Register No. (Hex.)	Description	
00C9	Minor Fault Description 3	
	bit 0	dEv [Speed Deviation]
	bit 1	PGo [Encoder (PG) Feedback Loss]
	bit 2	Reserved
	bit 3	CE [Modbus Communication Error]
	bit 4	bUS [Option Communication Error]
	bit 5	CALL [Serial Comm Transmission Error]
	bit 6	oL1 [Motor Overload]
	bit 7	oL2 [Drive Overload]
	bit 8	Reserved
	bit 9	EF0 [Option Card External Fault]
	bit A	rUn [Motor Switch during Run]
	bit B	Reserved
	bit C	CALL [Serial Comm Transmission Error]
	bit D	UL3 [Undertorque Detection 1]
	bit E	UL4 [Undertorque Detection 2]
	bit F	SE [Modbus Test Mode Error]
00CA	Minor Fault Description 4	
	bit 0	Reserved
	bit 1	oH3 [Motor Overheat (PTC Input)]
	bit 2 - 5	Reserved
	bit 6	FbL [PID Feedback Loss]
	bit 7	FbH [Excessive PID Feedback]
	bit 8	Reserved
	bit 9	dnE [Drive Disabled]
	bit A - F	Reserved
00CB	Minor Fault Description 5	
	bit 0	Reserved
	bit 1	AEr [Station Address Setting Error]
	bit 2	CyC [MECHATROLINK CommCycleSettingErr]
	bit 3	HCA [High Current Alarm]
	bit 4	LT-1 [Cooling Fan Maintenance Time]
	bit 5	LT-2 [Capacitor Maintenance Time]
	bit 6 - 7	Reserved
	bit 8	EF1 [External Fault (Terminal DI1)]
	bit 9	EF2 [External Fault (Terminal DI2)]
	bit A	SToF [Safe Torque OFF Hardware]
	bit B	Reserved
	bit C	oL5 [Mechanical Weakening Detection 1]
	bit D	UL5 [Mechanical Weakening Detection 2]
	bit E - F	Reserved

Register No. (Hex.)	Description	
00CC	Minor Fault Description 6	
	bit 0	Reserved
	bit 1	TrPC [IGBT Maintenance Time (90%)]
	bit 2	LT-3 [SoftChargeBypassRelay MainteTime]
	bit 3	LT-4 [IGBT Maintenance Time (50%)]
	bit 4	boL [Braking Transistor Overload]
	bit 5 - 7	Reserved
	bit 8	qAL1 [Q2pack Alarm]
	bit 9	qAL2 [Q2pack Alarm 2]
	bit A	qAL3 [Q2pack Alarm 3]
	bit B - F	Reserved
00CD - 00CF	Reserved	
00D0	CPF Contents 1	
	bit 0 - 1	Reserved
	bit 2	CPF02 [Control Circuit Fault]
	bit 3	CPF03 [Control Circuit Fault]
	bit 4 - 5	Reserved
	bit 6	CPF06 [Control Circuit Fault]
	bit 7	Reserved
	bit 8	CPF08 [Control Circuit Fault]
	bit 9 - A	Reserved
	bit B	CPF11 [Control Circuit Fault]
	bit C	CPF12 [Control Circuit Fault]
	bit D	CPF13 [Control Circuit Fault]
	bit E	CPF14 [Control Circuit Fault]
	bit F	Reserved
00D1	CPF Contents 2	
	bit 0	CPF16 [Control Circuit Fault]
	bit 1	CPF17 [Control Circuit Fault]
	bit 2	CPF18 [Control Circuit Fault]
	bit 3	CPF19 [Control Circuit Fault]
	bit 4	CPF20 [Control Circuit Fault]
	bit 5	CPF21 [Control Circuit Fault]
	bit 6	CPF22 [Control Circuit Fault]
	bit 7	CPF23 [Control Circuit Fault]
	bit 8	CPF24 [Control Circuit Fault]
	bit 9 - F	Reserved
00D2	CPF Contents 3	
	bit 0- 5	Reserved
	bit 6	CPF38 [EEPROM Data Error]
	bit 7 - F	Reserved
00D3 - 00D7	Reserved	

Register No. (Hex.)	Description	
00D8	oFA0x Description (CN5-A)	
	bit 0	oFA00 [Option Not Compatible with Port]
	bit 1	oFA01 [Option Fault/Connection Error]
	bit 2 - 4	Reserved
	bit 5	oFA05 [Option A/D Error]
	bit 6	oFA06 [Option Communication Error]
	bit 7 - F	Reserved
00D9	oFA1x Description (CN5-A)	
	bit 0	oFA10 [Option RAM Error]
	bit 1	oFA11 [Option Ope Mode Error]
	bit 2	oFA12 [Drive Receive CRC Error]
	bit 3	oFA13 [Drive Receive Frame Error]
	bit 4	oFA14 [Drive Receive Abort Error]
	bit 5	oFA15 [Option Receive CRC Error]
	bit 6	oFA16 [Option Receive Frame Error]
	bit 7	oFA17 [Option Receive Abort Error]
	bit 8 - F	Reserved
00DA	Reserved	
00DB	oFA3x Description (CN5-A)	
	bit 0	oFA30 [COM ID Error]
	bit 1	oFA31 [Type Code Error]
	bit 2	oFA32 [SUM Check Error]
	bit 3	oFA33 [Option Receive Time Over]
	bit 4	oFA34 [Modbus Time Over]
	bit 5	oFA35 [Drive Receive Time Over 1]
	bit 6	oFA36 [CI Check Error]
	bit 7	oFA37 [Drive Receive Time Over 2]
	bit 8	oFA38 [Control Reference Error]
	bit 9	oFA39 [Drive Receive Time Over 3]
	bit A	oFA40 [CtrlResSel 1Err]
	bit B	oFA41 [Drive Receive Time Over 4]
	bit C	oFA42 [CtrlResSel 2Err]
	bit D	oFA43 [Drive Receive Time Over 5]
	bit E - F	Reserved

Register No. (Hex.)	Description	
00DC - 00E4	Reserved	
00E5	Minor Fault Description 9	
	bit 0	EP24v [External Power 24V Supply]
	bit 1 - 3	Reserved
	bit 4	bAT [Keypad Battery Low Voltage]
	bit 5	Reserved
	bit 6	CP1 [Comparator 1 Limit Fault]
	bit 7	CP2 [Comparator 2 Limit Fault]
	bit 8	TiM [Keypad Time Not Set]
	bit 9	bCE [Bluetooth Communication Error]
	bit A - F	Reserved
00E6 - 00E9	Reserved	
00EA	Fault Description 11	
	bit 0	TiM [Keypad Time Not Set]
	bit 1	bAT [Keypad Battery Low Voltage]
	bit 2- D	Reserved
	bit E	SCF [Safety Circuit Fault]
	bit F	Reserved
00EB - 00ED	Reserved	
00EE	Fault Description 12	
	bit 0 - 2	Reserved
	bit 3	CP1 [Comparator 1 Limit Fault]
	bit 4	CP2 [Comparator 2 Limit Fault]
	bit 5	bCE [Bluetooth Communication Fault]
	bit 6 - F	Reserved
00EF - 00FA	Reserved	
00FB	Output Current **Note:** The unit of display is different for different models. 2001 to 2042, B001 to B018, 4001 to 4023: 0.01 A 2056 to 2082, 4031 to 4060: 0.1 A	

■ Broadcast Messages

Broadcast messages are available as read-only. The undefined bit signal in the broadcast operation signal uses the local data signal.

Table 6.12 Broadcast Messages for Modbus Communication

Register No. (Hex.)	Description	
0001	Operation signal	
	bit 0	Run command 1: Run, 0: Stop
	bit 1	Reverse run command 1: Reverse, 0: Forward run
	bit 2 - 3	Reserved
	bit 4	External fault 1: EF0 [Option Card External Fault]
	bit 5	Fault Reset 1: Reset command
	bit 6 - B	Reserved
	bit C	MFDI terminal DI5 input
	bit D	MFDI terminal DI6 input
	bit E	MFDI terminal DI7 input
	bit F	Reserved

Register No. (Hex.)	Description	
0002	Frequency reference	30000/100%

■ Fault Trace/Fault History Contents

These are the fault codes that the commands from monitors *[U2-xx, U3-xx]* read.

Table 6.13 Fault Trace/Fault History Contents

Fault Code (Hex.)	Name
0002	Uv1 [DC Bus Undervoltage]
0003	Uv2 [Control Power Undervoltage]
0004	Uv3 [Soft Charge Answerback Fault]
0005	SC [Short Circuit/IGBT Failure]
0006	GF [Ground Fault]
0007	oC [Overcurrent]
0008	ov [Overvoltage]
0009	oH [Heatsink Overheat]
000A	oH1 [Heatsink Overheat]
000B	oL1 [Motor Overload]
000C	oL2 [Drive Overload]
000D	oL3 [Overtorque Detection 1]
000E	oL4 [Overtorque Detection 2]
000F	rr [Dynamic Braking Transistor Fault]
0010	rH [Braking Resistor Overheat]
0011	EF3 [External Fault (Terminal DI3)]
0012	EF4 [External Fault (Terminal DI4)]
0013	EF5 [External Fault (Terminal DI5)]
0014	EF6 [External Fault (Terminal DI6)]
0015	EF7 [External Fault (Terminal DI7)]
0018	oS [Overspeed]
0019	dEv [Speed Deviation]
001A	PGo [Encoder (PG) Feedback Loss]
001B	PF [Input Phase Loss]
001C	LF [Output Phase Loss]
001D	oH3 [Motor Overheat (PTC Input)]

Fault Code (Hex.)	Name
001F	Err [EEPROM Write Error]
0020	oH4 [Motor Overheat Fault (PTC Input)]
0021	CE [Modbus Communication Error]
0022	bUS [Option Communication Error]
0025	CF [Control Fault]
0027	EF0 [Option Card External Fault]
0028	FbL [PID Feedback Loss]
0029	UL3 [Undertorque Detection 1]
002A	UL4 [Undertorque Detection 2]
002B	oL7 [High Slip Braking Overload]
0030	Includes oFx Fault [Hardware Fault]
0036	LF2 [Output Current Imbalance]
0037	STPo [Motor Step-Out Detected]
003B	SEr [Speed Search Retries Exceeded]
0041	FbH [Excessive PID Feedback]
0042	EF1 [External Fault (Terminal DI1)]
0043	EF2 [External Fault (Terminal DI2)]
0044	oL5 [Mechanical Weakening Detection 1]
0045	UL5 [Mechanical Weakening Detection 2]
0046	CoF [Current Offset Fault]
0049	qFL [Q2pack Fault]
004A	qFL1 [EEPROM Memory Q2pack Data Error]
004B	qFL2 [Q2pack Fault 2]
004C	qFL3 [Q2pack Fault 3]
004E	rF [Braking Resistor Fault]
004F	boL [BrakingTransistor Overload Fault]

Fault Code (Hex.)	Name
0051	LSo [Low Speed Motor Step-Out]
0052	nSE [Node Setup Error]
005B	dv7 [Polarity Judge Timeout]
0083	CPF02 [A/D Conversion Error]
0084	CPF03 [Control Board Connection Error]
0087	CPF06 [EEPROM Memory Data Error]
0089	CPF08 [Terminal Board Connection Error]
008C	CPF11 [RAM Fault]
008D	CPF12 [FLASH Memory Fault]
008E	CPF13 [Watchdog Circuit Exception]
008F	CPF14 [Control Circuit Fault]
0091	CPF16 [Clock Fault]
0092	CPF17 [Timing Fault]
0093	CPF18 [Control Circuit Fault]
0094	CPF19 [Control Circuit Fault]
0095	CPF20 [Control Circuit Error]
0096	CPF21 [Control Circuit Error]
0097	CPF22 [Hybrid IC Error]
0098	CPF23 [Control Board Connection Error]
0099	CPF24 [Drive Unit Signal Fault]
00A7	CPF38 [EEPROM Data Error]
0101	oFA00 [Option Not Compatible with Port]
0102	oFA01 [Option Fault/Connection Error]
0106	oFA05 [Option A/D Error]
0107	oFA06 [Option Communication Error]
0111	oFA10 [Option RAM Error]
0112	oFA11 [Option Ope Mode Error]
0113	oFA12 [Drive Receive CRC Error]

Fault Code (Hex.)	Name
0114	oFA13 [Drive Receive Frame Error]
0115	oFA14 [Drive Receive Abort Error]
0116	oFA15 [Option Receive CRC Error]
0117	oFA16 [Option Receive Frame Error]
0118	oFA17 [Option Receive Abort Error]
0131	oFA30 [COM ID Error]
0132	oFA31 [Type Code Error]
0133	oFA32 [SUM Check Error]
0134	oFA33 [Option Receive Time Over]
0135	oFA34 [Modbus Time Over]
0136	oFA35 [Drive Receive Time Over 1]
0137	oFA36 [CI Check Error]
0138	oFA37 [Drive Receive Time Over 2]
0139	oFA38 [Control Reference Error]
013A	oFA39 [Drive Receive Time Over 3]
013B	oFA40 [CtrlResSel 1Err]
013C	oFA41 [Drive Receive Time Over 4]
013D	oFA42 [CtrlResSel 2Err]
013E	oFA43 [Drive Receive Time Over 5]
0401	TiM [Keypad Time Not Set]
0402	bAT [Keypad Battery Low Voltage]
040F	SCF [Safety Circuit Fault]
0414	CP1 [Comparator 1 Limit Fault]
0415	CP2 [Comparator 2 Limit Fault]
0416	bCE [Bluetooth Communication Fault]
041A	dCE1 [Communication Error1]
041B	dCE2 [Communication Error2]

■ Minor Fault/Alarm Contents

These are the minor fault/alarm codes that communications register (007F (Hex.)) reads.

Table 6.14 Minor Fault/Alarm Contents (007 (Hex.))

Minor Fault/Alarm Code (Hex.)	Name
0001	Uv [Undervoltage]
0002	ov [Overvoltage]
0003	oH [Heatsink Overheat]
0004	Overheat Alarm (oH2)
0005	oL3 [Overtorque 1]
0006	oL4 [Overtorque 2]
0007	EF [FWD/REV Run Command Input Error]
0008	bb [Baseblock]
0009	EF3 [External Fault (Terminal DI3)]
000A	EF4 [External Fault (Terminal DI4)]
000B	EF5 [External Fault (Terminal DI5)]
000C	EF6 [External Fault (Terminal DI6)]
000D	EF7 [External Fault (Terminal DI7)]

Minor Fault/Alarm Code (Hex.)	Name
0010	oS [Overspeed]
0011	dEv [Speed Deviation]
0012	PGo [Encoder (PG) Feedback Loss]
0014	CE [Modbus Communication Error]
0015	bUS [Option Communication Error]
0016	CALL [Serial Comm Transmission Error]
0017	oL1 [Motor Overloaded]
0018	oL2 [Drive Overloaded]
001A	EF0 [Option Card External Fault]
001B	rUn [Motor Switch during Run]
001D	CALL [Serial Comm Transmission Error]
001E	UL3 [Undertorque Detection 1]
001F	UL4 [Undertorque Detection 2]

Minor Fault/Alarm Code (Hex.)	Name
0020	SE [Modbus Test Mode Error]
0021	L24v [Loss of External Power 24 Supply]
0022	oH3 [Motor Overheat (PTC Input)]
0027	FbL [PID Feedback Loss]
0028	FbH [Excessive PID Feedback]
002A	dnE [Drive Disabled]
0032	AEr [Station Address Setting Error]
0033	CyC [MECHATROLINK CommCycleSettingErr]
0034	HCA [High Current Alarm]
0035	LT-1 [Cooling Fan Maintenance Time]
0036	LT-2 [Capacitor Maintenance Time]
0039	EF1 [External Fault (Terminal DI1)]
003A	EF2 [External Fault (Terminal DI2)]
003B	SToF [Safe Torque OFF Hardware]
003D	oL5 [Mechanical Weakening Detection 1]

Minor Fault/Alarm Code (Hex.)	Name
003E	UL5 [Mechanical Weakening Detection 2]
0042	TrPC [IGBT Maintenance Time (90%)]
0043	LT-3 [SoftChargeBypassRelay MainteTime]
0044	LT-4 [IGBT Maintenance Time (50%)]
0045	boL [Braking Transistor Overload]
0049	qAL1 [Q2pack Alarm]
004A	qAL2 [Q2pack Alarm 2]
004B	qAL3 [Q2pack Alarm 3]
0081	EP24v [External Power 24V Supply]
0085	bAT [Keypad Battery Low Voltage]
0087	CP1 [Comparator 1 Limit Error]
0088	CP2 [Comparator 2 Limit Error]
0089	TiM [Keypad Time Not Set]
008A	bCE [Bluetooth Communication Error]

◆ Error Codes

■ Modbus Communications Error Code List

This table lists the Modbus communications error codes.

When an error occurs, remove the cause of the error and restart communications.

Table 6.15 Modbus Communications Error Codes

Error Code (Hex.)	Name	Cause
01	Function Code Error	The PLC set a function code that was not 03, 08, or 10 (Hex.)
02	Register Number Error	• The register number that is trying to access is not registered. • A starting number that was not 0001 or 0002 (Hex.) was set when broadcasting.
03	Bit Count Error	• Read and write data quantities are more than the 1 to 16 range. (Command message data quantity is disabled.) • The data that was read from non-consecutive holding registers contained more than 120 bytes. • The data to be written to non-consecutive holding registers contained more than 60 bytes. • In the write mode, the number of bytes in the message is not the number of data × 2.
21	Data Setting Error	• Writing control data or parameters made the settings go out of the permitted setting range. • A parameter setting error occurred when writing a parameter.
22	Write Mode Error	• Tried to write a disabled parameter during run. • When there was a *CPF06 [Control Circuit Error]*, the master tried to write a parameter other than one of these: – *A1-00 [Language Selection]* – *A1-01 [Access Level]* – *A1-02 [Control Method]* – *A1-03 [Init Parameters]* – *A1-04 [Password Input]* – *A1-05 [Password Setting]* – *E1-03 [V/f Pattern Selection]* – *o2-04 [Drive KVA Selection]* • Writes the read-only data.
23	DC Bus Undervoltage Write Error	During *Uv [DC Bus Undervoltage]*, a *Uv* write disabled parameter was written.
24	Error Writing Data During Parameter Processing	Tried to write a parameter from the master during parameter processing on the drive side.
25	Writing into EEPROM Disabled	Writing into EEPROM write is disabled, but EEPROM write was executed from Modbus communications. When this error occurs, the keypad shows a message and the drive continues operation.

■ No Response from Slave

The slave ignores the command message from the master and will not send a response message in these conditions:

- When a communications error (overrun, framing, parity, CRC-16) is detected in the command message.
- When the slave address in the command message and the slave address for the drive side do not agree (Use *H5-01 [Mbus Address]* to set the slave address of the drive)
- When the time interval between the data of which the message is composed is longer than 24 bits
- When the data length for the command message is not accurate

Note:

- If the keypad shows *CALL [Serial Comm Transmission Error]*, refer to "Troubleshooting" to remove the cause of the error, and try to do communications again. If the keypad does not show *CALL*, check *U1-19 [Modbus Err.Code]* for the error and error type.
- If you execute the write function code when the slave address in the command message is 00 (Hex.), all of the slaves will execute the write command, but they will not send response messages to the master.

7

Troubleshooting

7.1 Safety Precautions 214
7.2 Types of Faults, Minor Faults, Alarms, and Errors 216
7.3 List of Fault, Minor Fault, Alarm, and Error Codes 217
7.4 Faults 222
7.5 Minor Faults/Alarms 238
7.6 Parameter Setting Errors 247
7.7 Auto-Tuning Errors 251
7.8 Backup Function Operating Mode Display and Errors 255
7.9 Diagnosing and Resetting Faults 257
7.10 Troubleshooting Without Fault Display 258

7.1 Safety Precautions

⚠DANGER

Electrical Shock Hazard

Do not examine, connect, or disconnect wiring on an energized drive. Before servicing, disconnect all power to the equipment and wait for the time specified on the warning label at a minimum. The internal capacitor stays charged after the drive is de-energized. The charge indicator LED extinguishes when the DC bus voltage decreases below 50 Vdc. When all indicators are OFF, measure for dangerous voltages to make sure that the drive is safe.

If you do work on the drive when it is energized, it will cause serious injury or death from electrical shock. The drive has internal capacitors that stay charged after you de-energize the drive.

⚠WARNING

Electrical Shock Hazard

Do not operate the drive when covers are missing. Replace covers and shields before you operate the drive. Use the drive only as specified by the instructions.

Some figures in this section include drives without covers or safety shields to more clearly show the inside of the drive. If covers or safety shields are missing from the drive, it can cause serous injury or death.

Always ground the motor-side grounding terminal.

If you do not ground the equipment correctly, it can cause serious injury or death if you touch the motor case.

After the drive blows a fuse or trips an RCM/RCD, do not immediately energize the drive or operate peripheral devices. Wait for the time specified on the warning label at a minimum and make sure that all indicators are OFF. Then check the wiring and peripheral device ratings to find the cause of the problem. If you do not know the cause of the problem, contact the manufacturer before you energize the drive or peripheral devices.

If you do not fix the problem before you operate the drive or peripheral devices, it can cause serious injury or death.

Only let approved personnel install, wire, maintain, examine, replace parts, and repair the drive.

If personnel are not approved, it can cause serious injury or death.

Do not wear loose clothing or jewelry when you do work on the drive. Tighten loose clothing and remove all metal objects, for example watches or rings.

Loose clothing can catch on the drive and jewelry can conduct electricity and cause serious injury or death.

Do not remove covers or touch circuit boards while the drive is energized.

If you touch the internal components of an energized drive, it can cause serious injury or death.

Do not modify the drive body or drive circuitry.

Modifications to drive body and circuitry can cause serious injury or death, will cause damage to the drive, and will void the warranty. The manufacturer is not responsible for modifications of the product made by the user.

Fire Hazard

Tighten all terminal screws to the correct tightening torque.

Connections that are too loose or too tight can cause incorrect operation and damage to the drive. Incorrect connections can also cause death or serious injury from fire.

Tighten screws at an angle in the specified range shown in this manual.

If you tighten the screws at an angle not in the specified range, you can have loose connections that can cause damage to the terminal block or start a fire and cause serious injury or death.

Do not use the main circuit power supply (Overvoltage Category III) at incorrect voltages. Operate the drive in the specification range of the input voltage on the drive nameplate.

Voltages that are higher than the permitted nameplate tolerance can cause damage to the drive.

Do not put flammable or combustible materials on top of the drive and do not install the drive near flammable or combustible materials. Attach the drive to metal or other noncombustible material.

Flammable and combustible materials can start a fire and cause serious injury or death.

⚠WARNING

Crush Hazard

Wear eye protection when you do work on the drive.

If you do not use correct safety equipment, it can cause serious injury or death.

Use a crane or hoist to move large drives when necessary.

If you try to move a large drive without a crane or hoist, it can cause serious injury or death.

NOTICE

When you touch the drive and circuit boards, make sure that you observe correct electrostatic discharge (ESD) procedures.

If you do not follow procedures, it can cause ESD damage to the drive circuitry.

Do not break the electrical connection between the drive and the motor when the drive is outputting voltage.

Incorrect equipment sequencing can cause damage to the drive.

Make sure that all connections are correct after you install the drive and connect peripheral devices.

Incorrect connections can cause damage to the drive.

Note:

Do not use unshielded wire for control wiring. Use shielded, twisted-pair wires and ground the shield to the ground terminal of the drive. Unshielded wire can cause electrical interference and unsatisfactory system performance.

7.2 Types of Faults, Minor Faults, Alarms, and Errors

If the drive or motor do not operate correctly, check the drive keypad for a code or message.

If problems occur that are not identified in this manual, contact the nearest manufacturer's representative with this information:

- Drive model
- Drive software version
- Date of purchase
- Description of the problem (such as failure conditions)

Contact the manufacturer if there is damage to the drive. Contact information is on the back cover of the manual.

Table 7.1 Types of Faults, Minor Faults, Alarms, and Errors

Type	Drive Response
Fault	When the drive detects a fault, it will cause these conditions: • The keypad shows the fault code, and the ALM LED stays illuminated. • The drive shuts off output, and the motor coasts to a stop. Some faults let the user select a motor stopping method. • The terminal set to *H2-01 to H2-03 = 3 [MFDO Function Select = Fault]* will activate. The drive will not operate until you clear the fault with a Fault Reset and the drive goes back to usual status.
Minor Faults/Alarms	When the drive detects a minor fault or an alarm, it will cause these conditions: • The keypad shows the alarm code, and the ALM LED flashes. • The drive will continue to operate the motor. Some alarms let the user select a motor stopping method. • If the drive detects a minor fault, the terminal set to *H2-01 to H2-03 = 4 [Alarm]* will activate. If you do not set parameters *H2-01 to H2-03*, the drive will not trigger MFDO terminals when it detects a minor fault. • The drive will not output a minor fault signal when it detects an alarm. It is not necessary to do Fault Reset.
Operation Errors	An error occurs when parameter settings do not agree or a parameter combination is incorrect. The drive will not operate until you set the parameters correctly. When the drive detects an operation error, these conditions will result: • The keypad shows the error code. • Multi-function outputs do not output an alarm signal. Find the parameters that caused the error and correct the settings.
An Auto-Tuning Error	An error occurs during Auto-Tuning. When the drive detects a tuning error, it will cause these conditions: • The keypad shows the error code. • Multi-function outputs do not output an alarm signal. • The motor coasts to stop. Remove the cause of the error and do Auto-Tuning again.
Copy Function Error	An error occurs when you use the keypad for a backup, restore, or verify operation. When the drive detects a copy function error, it will cause these conditions: • The keypad shows the error code. • Multi-function outputs do not output an alarm signal. Push a key on the keypad to clear the error. Remove the cause of the error and try the backup, restore, or verify operation again.

7.3 List of Fault, Minor Fault, Alarm, and Error Codes

The display codes are in alphabetical order. Search the table for the code shown on the keypad, and identify its causes and possible solutions.

Note:

The number in parentheses adjacent to the code in the table identifies the fault code or minor fault code (hex. number) that was read during Modbus communications.

Example: AEr (0032)

Table 7.2 List of Fault, Minor Fault, Alarm, and Error Codes

Display (Hex.)	Name	ALM LED	Type	Ref.
AEr (0032)	Station Address Setting Error	Flashing	Alarm	238
bAT (0085)	Keypad Battery Low Voltage	Flashing	Alarm	238
bAT (0402)	Keypad Battery Low Voltage	Illuminated	Fault	222
bb (0008)	Baseblock	Flashing	Alarm	238
bCE (008A)	Bluetooth Communication Error	Flashing	Alarm	238
bCE (0416)	Bluetooth Communication Fault	Illuminated	Fault	222
boL (0045)	Braking Transistor Overload	Flashing	Alarm	238
boL (004F)	BrakingTransistor Overload Fault	Illuminated	Fault	222
bUS (0015)	Option Communication Error	Flashing	Alarm	238
bUS (0022)	Option Communication Error	Illuminated	Fault	222
CALL (001D)	Serial Comm Transmission Error	Flashing	Alarm	239
CE (0014)	Modbus Communication Error	Flashing	Alarm	239
CE (0021)	Modbus Communication Error	Illuminated	Fault	222
CF (0025)	Control Fault	Illuminated	Fault	223
CoF (0046)	Current Offset Fault	Illuminated	Fault	223
CP1 (0087)	Comparator 1 Limit Error	Flashing	Alarm	239
CP1 (0414)	Comparator 1 Limit Error	Illuminated	Fault	223
CP2 (0088)	Comparator 2 Limit Error	Flashing	Alarm	239
CP2 (0415)	Comparator 2 Limit Error	Illuminated	Fault	223
CPEr	Control Mode Mismatch	-	Backup Function Error	255
CPF00, CPF01 CPF02, CPF03 (0083, 0084) CPF08 (0089) CPF11 - CPF14 (008C - 008F) CPF16 - CPF24 (0091 - 0099) CPF38 (00A7)	Control Circuit Error	Illuminated	Fault	224
CPF06 (0087)	EEPROM Memory Data Error	Illuminated	Fault	224
CPyE	Error Writing Data	-	Backup Function Error	255
CrST	Remove RUN Command to Reset	Flashing	Not an alarm.	239
CSEr	Control Mode Mismatch	-	Backup Function Error	255
CyC (0033)	MECHATROLINK CommCycleSettingErr	Flashing	Alarm	240
CyPo (0029)	Cycle Power to Accept Changes	Flashing	Alarm	240
dCE1 (041A)	Communication Error1	Illuminated	Fault	224
dCE2 (041B)	Communication Error2	Illuminated	Fault	224
dEv (0011)	Speed Deviation	Flashing	Alarm	240
dEv (0019)	Speed Deviation	Illuminated	Fault	224
dFPS	Drive Model Mismatch	-	Backup Function Error	255
dnE (002A)	Drive Disabled	Flashing	Alarm	240
dv7 (005B)	Polarity Judge Timeout	Illuminated	Fault	224
E5 (0031)	MECHATROLINK Watchdog Timer Err	Flashing	Alarm	240

Display (Hex.)	Name	ALM LED	Type	Ref.
E5 (0039)	MECHATROLINK Watchdog Timer Err	Illuminated	Fault	225
EF (0007)	FWD/REV Run Command Input Error	Flashing	Alarm	240
EF0 (001A)	Option Card External Fault	Flashing	Alarm	241
EF0 (0027)	Option Card External Fault	Illuminated	Fault	225
EF1 (0042)	External Fault (Terminal DI1)	Illuminated	Fault	225
EF1 (0039)	External Fault (Terminal DI1)	Flashing	Alarm	241
EF2 (003A)	External Fault (Terminal DI2)	Flashing	Alarm	241
EF2 (0043)	External Fault (Terminal DI2)	Illuminated	Fault	225
EF3 (0009)	External Fault (Terminal DI3)	Flashing	Alarm	241
EF3 (0011)	External Fault (Terminal DI3)	Illuminated	Fault	226
EF4 (000A)	External Fault (Terminal DI4)	Flashing	Alarm	241
EF4 (0012)	External Fault (Terminal DI4)	Illuminated	Fault	226
EF5 (000B)	External Fault (Terminal DI5)	Flashing	Alarm	241
EF5 (0013)	External Fault (Terminal DI5)	Illuminated	Fault	226
EF6 (000C)	External Fault (Terminal DI6)	Flashing	Alarm	241
EF6 (0014)	External Fault (Terminal DI6)	Illuminated	Fault	226
EF7 (000D)	External Fault (Terminal DI7)	Flashing	Alarm	242
EF7 (0015)	External Fault (Terminal DI7)	Illuminated	Fault	226
End1	Excessive Rated Voltage Setting	Flashing	Auto-Tuning Error	251
End2	Iron Core Saturation Coefficient	Flashing	Auto-Tuning Error	251
End3	Rated Current Setting Alarm	Flashing	Auto-Tuning Error	251
End4	Adjusted Slip Calculation Error	Flashing	Auto-Tuning Error	251
End5	Resistance Tuning Error	Flashing	Auto-Tuning Error	251
End6	Leakage Inductance Alarm	Flashing	Auto-Tuning Error	251
End7	No-Load Current Alarm	Flashing	Auto-Tuning Error	251
End8	HFI Alarm	Flashing	Auto-Tuning Error	251
End9	Initial Pole Detection Alarm	Flashing	Auto-Tuning Error	252
EP24v (0081)	External Power 24V Supply	Flashing	Alarm	242
Er-01	Motor Data Error	Flashing	Auto-Tuning Error	252
Er-02	Drive in an Alarm State	Flashing	Auto-Tuning Error	252
Er-03	STOP Button was Pressed	Flashing	Auto-Tuning Error	252
Er-04	Line-to-Line Resistance Error	Flashing	Auto-Tuning Error	252
Er-05	No-Load Current Error	Flashing	Auto-Tuning Error	252
Er-08	Rated Slip Error	Flashing	Auto-Tuning Error	253
Er-09	Acceleration Error	Flashing	Auto-Tuning Error	253
Er-10	Motor Direction Error	Flashing	Auto-Tuning Error	253
Er-11	Motor Speed Error	Flashing	Auto-Tuning Error	253
Er-12	Current Detection Error	Flashing	Auto-Tuning Error	253
Er-13	Leakage Inductance Error	Flashing	Auto-Tuning Error	253
Er-14	Motor Speed Error 2	Flashing	Auto-Tuning Error	253
Er-15	Torque Saturation Error	Flashing	Auto-Tuning Error	253
Er-16	Inertia ID Error	Flashing	Auto-Tuning Error	254
Er-17	Reverse Prohibited Error	Flashing	Auto-Tuning Error	254
Er-18	Back EMF Error	Flashing	Auto-Tuning Error	254
Er-19	PM Inductance Error	Flashing	Auto-Tuning Error	254
Er-20	Stator Resistance Error	Flashing	Auto-Tuning Error	254

Display (Hex.)	Name	ALM LED	Type	Ref.
Er-25	HighFreq Inject Param Tuning Err	Flashing	Auto-Tuning Error	254
Err (001F)	EEPROM Write Error	Illuminated	Fault	226
FbH (0028)	Excessive PID Feedback	Flashing	Alarm	242
FbH (0041)	Excessive PID Feedback	Illuminated	Fault	226
FbL (0027)	PID Feedback Loss	Flashing	Alarm	242
FbL (0028)	PID Feedback Loss	Illuminated	Fault	227
GF (0006)	Ground Fault	Illuminated	Fault	227
HCA (0034)	High Current Alarm	Flashing	Alarm	242
iFEr	Communication Err	-	Backup Function Error	255
L24v (0021)	Loss of External Power 24 V Supply	Flashing	Alarm	242
LF (001C)	Output Phase Loss	Illuminated	Fault	227
LF2 (0036)	Output Current Imbalance	Illuminated	Fault	227
LoG	Log Com Error	Flashing	Alarm	243
LSo (0051)	Low Speed Motor Step-Out	Illuminated	Fault	228
LT-1 (0035)	Cooling Fan Maintenance Time	Flashing	Alarm	243
LT-2 (0036)	Capacitor Maintenance Time	Flashing	Alarm	243
LT-3 (0043)	SoftChargeBypassRelay MainteTime	Flashing	Alarm	243
LT-4 (0044)	IGBT Maintenance Time (50%)	Flashing	Alarm	243
ndAT	Model,VolClass,Capacity Mismatch	-	Backup Function Error	255
nSE (0052)	Node Setup Error	Illuminated	Fault	228
oC (0007)	Overcurrent	Illuminated	Fault	228
oFA00 (0101)	Option Not Compatible with Port	Illuminated	Fault	229
oFA03 - oFA06 (0104 - 0107)	Option Card Error Occurred at Option Port (CN5)	Illuminated	Fault	229
oFA10, oFA11 (0111, 0112)	Option Card Error Occurred at Option Port (CN5)	Illuminated	Fault	229
oFA12 - oFA17 (0113 - 0118)	Option Card Connection Error (CN5)	Illuminated	Fault	230
oFA30 - oFA43 (0131 - 013E)	Communication Option Card Connection Error (CN5)	Illuminated	Fault	230
oH (0003)	Heatsink Overheat	Flashing	Alarm	243
oH (0009)	Heatsink Overheat	Illuminated	Fault	230
oH1 (000A)	Heatsink Overheat	Illuminated	Fault	230
oH2 (0004)	External Overheat (H1-XX=7D)	Flashing	Alarm	243
oH3 (001D)	Motor Overheat (PTC Input)	Illuminated	Fault	230
oH3 (0022)	Motor Overheat (PTC Input)	Flashing	Alarm	243
oH4 (0020)	Motor Overheat Fault (PTC Input)	Illuminated	Fault	231
oL1 (000B)	Motor Overload	Illuminated	Fault	231
oL2 (000C)	Drive Overload	Illuminated	Fault	232
oL3 (0005)	Overtorque 1	Flashing	Alarm	244
oL3 (000D)	Overtorque Detection 1	Illuminated	Fault	232
oL4 (0006)	Overtorque 2	Flashing	Alarm	244
oL4 (000E)	Overtorque Detection 2	Illuminated	Fault	232
oL5 (003D)	Mechanical Weakening Detection 1	Flashing	Alarm	244
oL5 (0044)	Mechanical Weakening Detection 1	Illuminated	Fault	232
oL7 (002B)	High Slip Braking Overload	Illuminated	Fault	233
oPE01	Drive Capacity Setting Fault	Flashing	Parameter Setting Errors	247
oPE02	Parameter Range Setting Error	Flashing	Parameter Setting Errors	247
oPE03	Multi-Function Input Setting Err	Flashing	Parameter Setting Errors	247
oPE05	Run Cmd/Freq Ref Source Sel Err	Flashing	Parameter Setting Errors	248

Display (Hex.)	Name	ALM LED	Type	Ref.
oPE07	Analog Input Selection Error	Flashing	Parameter Setting Errors	248
oPE08	Parameter Selection Error	Flashing	Parameter Setting Errors	249
oPE09	PID Control Selection Fault	Flashing	Parameter Setting Errors	249
oPE10	V/f Data Setting Error	Flashing	Parameter Setting Errors	250
oPE11	Carrier Frequency Setting Error	Flashing	Parameter Setting Errors	250
oPE13	Pulse Monitor Selection Error	Flashing	Parameter Setting Errors	250
oPE16	Energy Saving Constants Error	Flashing	Parameter Setting Errors	250
oPE33	Digital Output Selection Error	Flashing	Parameter Setting Errors	250
oPr (001E)	Keypad Connection Fault	Illuminated	Fault	233
oS (0010)	Overspeed	Flashing	Alarm	244
oS (0018)	Overspeed	Illuminated	Fault	244
ov (0002)	Overvoltage	Flashing	Alarm	244
ov (0008)	Overvoltage	Illuminated	Fault	233
PASS	Modbus Communication Test	Flashing	Not an alarm.	245
PE1 (0047) PE2 (0048)	PLC Faults	Illuminated	Fault	234
PF (0047)	Input Phase Loss	Flashing	Alarm	245
PF (001B)	Input Phase Loss	Illuminated	Fault	234
PWEr	Q2pack Password Mismatch	-	Backup Function Error	255
qAL1 (0049)	Q2pack Alarm	Flashing	Alarm	240
qAL2 (004A)	Q2pack Alarm 2	Flashing	Alarm	240
qAL3 (004B)	Q2pack Alarm 3	Flashing	Alarm	240
qFL (004A)	EEPROM Memory Q2pack Data Error	Illuminated	Fault	225
qFL1 (0049)	Q2pack Fault	Illuminated	Fault	225
qFL2 (004B)	Q2pack Fault 2	Illuminated	Fault	225
qFL3 (004C)	Q2pack Fault 3	Illuminated	Fault	225
rdEr	Error Reading Data	-	Backup Function Error	255
rF (004E)	Braking Resistor Fault	Illuminated	Fault	234
rH (0010)	Braking Resistor Overheat	Illuminated	Fault	235
rr (000F)	Dynamic Braking Transistor Fault	Illuminated	Fault	235
rUn (001B)	Motor Switch during Run	Flashing	Alarm	245
SC (0005)	Short Circuit/IGBT Failure	Illuminated	Fault	235
SCF (040F)	Safety Circuit Fault	Illuminated	Fault	235
SE (0020)	Modbus Test Mode Error	Flashing	Alarm	245
SEr (003B)	Speed Search Retries Exceeded	Illuminated	Fault	235
SToF (003B)	Safe Torque OFF	Flashing	Alarm	245
STPo (0037)	Motor Step-Out Detected	Illuminated	Fault	236
TiM (0089)	Keypad Time Not Set	Flashing	Alarm	246
TiM (0401)	Keypad Time Not Set	Illuminated	Fault	236
TrPC (0042)	IGBT Maintenance Time (90%)	Flashing	Alarm	246
UL3 (001E)	Undertorque Detection 1	Flashing	Alarm	246
UL3 (0029)	Undertorque Detection 1	Illuminated	Fault	236
UL4 (001F)	Undertorque Detection 2	Flashing	Alarm	246
UL4 (002A)	Undertorque Detection 2	Illuminated	Fault	236
UL5 (003E)	Mechanical Weakening Detection 2	Flashing	Alarm	246
UL5 (0045)	Mechanical Weakening Detection 2	Illuminated	Fault	236
Uv (0001)	DC Bus Undervoltage	Flashing	Alarm	246

Display (Hex.)	Name	ALM LED	Type	Ref.
Uv1 (0002)	DC Bus Undervoltage	Illuminated	Fault	236
Uv2 (0003)	Control Power Undervoltage	Illuminated	Fault	237
Uv3 (0004)	Soft Charge Answerback Fault	Illuminated	Fault	237
vAEr	Voltage Class, Capacity Mismatch	-	Backup Function Error	255
vFyE	Parameters do not Match	-	Backup Function Error	256

7.4 Faults

This section gives information about the causes and possible solutions of faults. You must use the Fault Reset operation to remove the fault before you can operate the drive. Use the information in this table to remove the cause of the fault.

Code	Name	Causes	Possible Solutions
bAT	Keypad Battery Low Voltage	The keypad battery voltage is low.	Replace the keypad battery.
Note: Use *o4-24 [bAT Detection Selection]* to enable/disable *bAT* detection.			
Code	**Name**	**Causes**	**Possible Solutions**
bCE	Bluetooth Communication Fault	The smartphone or tablet with Q2dev Mobile installed is too far from the keypad.	Use the smartphone or tablet 10 m (32.8 ft) or nearer to the keypad. **Note:** *bCE* can occur when the smartphone or tablet is 10 m (32.8 ft) or nearer to the keypad depending on the specifications of the smartphone or tablet.
		Radio waves from a different device are causing interference with communications between the smartphone or tablet and keypad.	Make sure that no device around the keypad uses the same radio bandwidth (2400 MHz to 2480 MHz), and prevent radio interference.
Note: • The drive detects this error when you use the Bluetooth LCD keypad and operate the drive with a smartphone or tablet. • Do a Fault Reset to clear the fault. • Set the stopping method for this fault in *o2-27 [BLE Disconn.Selection@BLE Ctrl]*.			
Code	**Name**	**Causes**	**Possible Solutions**
boL	BrakingTransistor Overload Fault	The duty cycle of the braking transistor is high (the regeneration power or repetition frequency is high).	• Install a regenerative converter. • Increase the deceleration time.
		You enabled the protective function for the braking transistor when you have a regenerative converter.	Set *L8-55 = 0 [DB IGBT Protection = Disable]*.
		The braking transistor in the drive is broken.	Replace the drive.
Note: Do a Fault Reset to clear the fault.			
Code	**Name**	**Causes**	**Possible Solutions**
bUS	Option Communication Error	The drive did not receive a signal from the controller.	Correct wiring errors.
		The communications cable wiring is incorrect.	
		There is a short-circuit in the communications cable or the communications cable is not connected.	• Repair short circuits and connect cables. • Replace the defective communications cable.
		Electrical interference caused a communication data error.	• Examine the control circuit lines, main circuit lines, and ground wiring, and decrease the effects of electrical interference. • Make sure that a magnetic contactor is not the source of the electrical interference, then use a Surge Protective Device if necessary. • Use only the recommended cables or other shielded line. Ground the shield on the controller side or the drive input power side. • Separate the communication wiring from drive power lines, and install a noise filter to the input side of the power supply for communication. • Decrease the effects of electrical interference from the controller.
		The option is incorrectly installed to the drive.	Correctly install the option to the drive.
		The option is damaged.	If the fault continues and the wiring is correct, replace the option.
Note: • The drive detects this error if the Run command or frequency reference is assigned to the option card. • Do a Fault Reset to clear the fault. • If the drive detects this error, the drive will operate the motor as specified by the stopping method set in *F6-01 [Comm.Error Selection]*.			
Code	**Name**	**Causes**	**Possible Solutions**
CE	Modbus Communication Error	The communications cable wiring is incorrect.	Correct wiring errors.
		There is a short circuit in the communications cable or the communications cable is not connected.	• Repair short circuits and connect cables. • Replace the defective communications cable.

Code	Name	Causes	Possible Solutions
		Electrical interference caused a communication data error.	• Examine the control circuit lines, main circuit lines, and ground wiring, and decrease the effects of electrical interference. • Make sure that a magnetic contactor is not the source of the electrical interference, then use a Surge Protective Device if necessary. • Use only the recommended cables or other shielded line. Ground the shield on the controller side or the drive input power side. • Separate the communication wiring from drive power lines, and install a noise filter to the input side of the power supply for communication. • Decrease the effects of electrical interference from the controller.

Note:
• The drive detects this error if it does not correctly receive control data for the *CE* detection time set to *H5-09 [Mbus CE Detect Time]*.
• Do a Fault Reset to clear the fault.
• If the drive detects this error, the drive will operate the motor as specified by the stopping method set in *H5-04 [Mbus Error Stop]*.

Code	Name	Causes	Possible Solutions
CF	Control Fault	Motor parameters are set incorrectly	Correctly set the motor parameters and do Auto-Tuning again.
		The torque limit setting is too low.	Adjust *L7-01 to L7-04 [Torque Limit]*.
		The load inertia is too large.	• Adjust *C1-02, C1-04, C1-06, and C1-08 [Deceleration Times]*. • Set the frequency reference to the minimum output frequency, and stop the Run command when the drive stops deceleration.
		The drive is trying to ramp to stop a machine that cannot do ramp to stop or on a machine for which deceleration is not necessary.	Correctly set *b1-03 [Stopping Method Selection]*.
		The motor and drive are connected incorrectly.	Correct wiring errors.
		Line-to-line Resistance Tuning is not done.	Do Stationary Auto-Tuning for Line-to-Line Resistance.
		The drive received a Run command while the motor was coasting.	• Examine the sequence and input the Run command after the motor fully stops. • Set *b3-01 = 1 [SpSrch@Start Selection = Enabled]*.

Note:
• The drive detects this error if the torque reference is more than the torque limit for 3 seconds or longer while the drive ramps to stop.
• Do a Fault Reset to clear the fault.

Code	Name	Causes	Possible Solutions
CoF	Current Offset Fault	The drive starts operation while the induced voltage stays in the motor (during coasting to a stop or after fast deceleration).	• Make a sequence that does not restart operation when induced voltage stays in the motor. • Set *b3-01 = 1 [SpSrch@Start Selection = Enabled]*. • Use *Speed Search from Fmax or Fref [H1-xx = 67, 68]* to do a speed search through one of the external terminals. **Note:** When controlling the PM motor, External Speed Search commands 1 and 2 operate the same.
		A drive hardware problem occurred.	Replace the drive.

Note:
• The drive detects this error if the current offset value is more than the permitted setting range while the drive automatically adjusts the current offset.
• Do a Fault Reset to clear the fault.

Code	Name	Causes	Possible Solutions
CP1	Comparator 1 Limit Error	The monitor value set in *H2-20 [Compare1 Mon. Selection]* was in the range of *H2-21 [Compare1 Low Limit]* and *H2-22 [Compare1 Up Limit]*.	Examine the monitor value and remove the cause of the fault.

Note:
• The drive detects this error when *H2-01 to H2-03 = 3C [MFDO Function Select = Comparator 1]*.
• Do a Fault Reset to clear the fault.
• Set the stopping method for this fault in *H2-33 [Compare1 Protection Selection]*.

Code	Name	Causes	Possible Solutions
CP2	Comparator 2 Limit Error	The monitor value set in *H2-26 [Compare2 Mon. Selection]* was outside the range of *H2-27 [Compare2 Low Limit]* and *H2-28 [Compare2 Up Limit]*.	Examine the monitor value and remove the cause of the fault.

Note:
• The drive detects this error when *H2-01 to H2-03 = 3D [MFDO Function Select = Comparator 2]*.
• Do a Fault Reset to clear the fault.
• Set the stopping method for this fault in *H2-35 [Compare2 Protection Selection]*.

Code	Name	Causes	Possible Solutions
CPF00, CPF01, CPF02, CPF03, CPF06, CPF08, CPF11 to CPF14, CPF16 to CPF24, CPF38	Control Circuit Error	A drive hardware problem occurred.	• Re-energize the drive. • If the fault stays, replace the control board or the drive. For information about replacing the control board, contact the manufacturer or your nearest sales representative.
Note: • Do a Fault Reset to clear the fault. • Fault trace is not available for these faults.			

Code	Name	Causes	Possible Solutions
CPF06	EEPROM Memory Data Error	The drive power supply was de-energized while a communication option card entered a parameter Write command.	Set *A1-03 = 2220, 3330 [Init Parameters = 2-Wire Initialization, 3-Wire Initialization]* and initialize the drive.
		An EEPROM peripheral circuit error occurred.	• Re-energize the drive. • If the fault stays, replace the control board or the drive. For information about replacing the control board, contact the manufacturer or your nearest sales representative.
Note: • The drive detects this error if there is an error in the data written to the EEPROM of the drive. • Do a Fault Reset to clear the fault. • Fault trace is not available for this fault.			

Code	Name	Causes	Possible Solutions
CPF25	Terminal Board not Connected	The terminal board is not correctly connected to the drive.	1. De-energize the drive. 2. Correctly connect the terminal board to the drive. 3. Re-energize the drive.
Note: Do a Fault Reset to clear the fault.			

Code	Name	Causes	Possible Solutions
dCE1	Communication Error1	A drive hardware problem occurred temporarily due to noise.	• Remove the cause of the noise. • If the fault stays, replace the control board or the drive.
Note: • Do a Fault Reset to clear the fault. • Fault trace is not available for these faults.			

Code	Name	Causes	Possible Solutions
dCE2	Communication Error2	A drive hardware problem occurred temporarily due to noise.	• Remove the cause of the noise. • If the fault stays, replace the control board or the drive.
Note: • Do a Fault Reset to clear the fault. • Fault trace is not available for these faults.			

Code	Name	Causes	Possible Solutions
dEv	Speed Deviation	The load is too heavy.	Decrease the load.
		Acceleration and deceleration times are set too short.	Increase the values set in *C1-01 to C1-08 [Acceleration/ Deceleration Time]*.
		The *dEv* detection level settings are incorrect.	Adjust *F1-10 [Speed Dev Level]* and *F1-11 [Speed Dev Delay Time]*.
		The load is locked up.	Examine the machine.
		The holding brake is stopping the motor.	Release the holding brake.
Note: • The drive detects this error if the difference between the detected speed and the speed reference is more than the setting of *F1-10* for longer than *F1-11*. • Do a Fault Reset to clear the fault. • If the drive detects this error, the drive will operate the motor as specified by the stopping method set in *F1-04 [Speed Dev Detection Select]*.			

Code	Name	Causes	Possible Solutions
dv7	Polarity Judge Timeout	There is a disconnection in the motor coil winding.	Measure the motor line-to-line resistance and replace the motor if a coil is disconnected.
		The screws on the drive output terminals are loose.	Tighten the terminal screws to the correct tightening torque.
Note: • The drive detects this error if it cannot detect polarity in a pre-set length of time. • Do a Fault Reset to clear the fault.			

Code	Name	Causes	Possible Solutions
qFL	EEPROM Memory Q2pack Data Error	There is an error in the EEPROM peripheral circuit.	• Re-energize the drive. • If the fault stays, replace the control board or the drive. For information about replacing the control board, contact the manufacturer or your nearest sales representative.
		There is a problem with the EEPROM data.	Set *A1-03 = 2220, 3330 [Init Parameters = 2-Wire Initialization, 3-Wire Initialization]* to initialize the drive, then upload the Q2pack project to the drive again.

Note:
• The drive detects this error if there is an error in the Q2pack program that was saved to EEPROM.
• Do a Fault Reset to clear the fault.

Code	Name	Causes	Possible Solutions
qFL1	Q2pack Fault	There was a fault in the Q2pack program.	Examine the Q2pack program and remove the cause of the fault. This is not a drive fault.

Note:
Do a Fault Reset to clear the fault.

Code	Name	Causes	Possible Solutions
qFL2	Q2pack Fault 2	There was a fault in the Q2pack program.	Examine the Q2pack program and remove the cause of the fault. This is not a drive fault.

Note:
Do a Fault Reset to clear the fault.

Code	Name	Causes	Possible Solutions
qFL3	Q2pack Fault 3	There was a fault in the Q2pack program.	Examine the Q2pack program and remove the cause of the fault. This is not a drive fault.

Note:
Do a Fault Reset to clear the fault.

Code	Name	Causes	Possible Solutions
E5	MECHATROLINK Watchdog Timer Err	The drive detected a watchdog circuit exception while it received data from the controller.	Examine the MECHATROLINK cable connection. If this error occurs frequently, examine the wiring and decrease the effects of electrical interference as specified by these manuals: • MECHATROLINK-II Installation Guide (MECHATROLINK Members Association, manual number MMATDEP011) • MECHATROLINK-III Installation Manual (MECHATROLINK Members Association, publication number MMATDEP018)

Note:
• Do a Fault Reset to clear the fault.
• If the drive detects this fault, it will operate the motor as specified by the stop method set in *F6-25 [MLII Watchdog Error Sel]*.

Code	Name	Causes	Possible Solutions
EF0	Option Card External Fault	The communication option received an external fault from the controller.	1. Find the device that caused the external fault and remove the cause. 2. Clear the external fault input from the controller.
		A programming error occurred on the controller side.	Examine the operation of the controller program.

Note:
• The drive detects this fault if the alarm function on the external device side is operating.
• Do a Fault Reset to clear the fault.
• If the drive detects this fault, it will operate the motor as specified by the stop method set in *F6-03 [Comm Ext Flt Select (EF0)]*.

Code	Name	Causes	Possible Solutions
EF1	External Fault (Terminal DI1)	MFDI terminal DI1 caused an external fault through an external device.	1. Find the device that caused the external fault and remove the cause. 2. Clear the external fault input in the MFDI.
		The wiring is incorrect.	Correctly connect the signal line to MFDI terminal DI1.
		External Fault [H1-01 = 20 to 2B] is set to MFDI terminal DI1, but the terminal is not in use.	Correctly set the MFDI.

Note:
Do a Fault Reset to clear the fault.

Code	Name	Causes	Possible Solutions
EF2	External Fault (Terminal DI2)	MFDI terminal DI2 caused an external fault through an external device.	1. Find the device that caused the external fault and remove the cause. 2. Clear the external fault input in the MFDI.
		The wiring is incorrect.	Correctly connect the signal line to MFDI terminal DI2.
		External Fault [H1-02 = 20 to 2B] is set to MFDI terminal DI2, but the terminal is not in use.	Correctly set the MFDI.

Note:
Do a Fault Reset to clear the fault.

Code	Name	Causes	Possible Solutions
EF3	External Fault (Terminal DI3)	MFDI terminal DI3 caused an external fault through an external device.	1. Find the device that caused the external fault and remove the cause. 2. Clear the external fault input in the MFDI.
		The wiring is incorrect.	Correctly connect the signal line to MFDI terminal DI3.
		External Fault [H1-03 = 20 to 2B] is set to MFDI terminal DI3, but the terminal is not in use.	Correctly set the MFDI.
Note: Do a Fault Reset to clear the fault.			
Code	**Name**	**Causes**	**Possible Solutions**
EF4	External Fault (Terminal DI4)	MFDI terminal DI4 caused an external fault through an external device.	1. Find the device that caused the external fault and remove the cause. 2. Clear the external fault input in the MFDI.
		The wiring is incorrect.	Correctly connect the signal line to MFDI terminal DI4.
		External Fault [H1-04 = 20 to 2B] is set to MFDI terminal DI4, but the terminal is not in use.	Correctly set the MFDI.
Note: Do a Fault Reset to clear the fault.			
Code	**Name**	**Causes**	**Possible Solutions**
EF5	External Fault (Terminal DI5)	MFDI terminal DI5 caused an external fault through an external device.	1. Find the device that caused the external fault and remove the cause. 2. Clear the external fault input in the MFDI.
		The wiring is incorrect.	Correctly connect the signal line to MFDI terminal DI5.
		External Fault [H1-05 = 20 to 2B] is set to MFDI terminal DI5, but the terminal is not in use.	Correctly set the MFDI.
Note: Do a Fault Reset to clear the fault.			
Code	**Name**	**Causes**	**Possible Solutions**
EF6	External Fault (Terminal DI6)	MFDI terminal DI6 caused an external fault through an external device.	1. Find the device that caused the external fault and remove the cause. 2. Clear the external fault input in the MFDI.
		The wiring is incorrect.	Correctly connect the signal line to MFDI terminal DI6.
		External Fault [H1-06 = 20 to 2B] is set to MFDI terminal DI6, but the terminal is not in use.	Correctly set the MFDI.
Note: Do a Fault Reset to clear the fault.			
Code	**Name**	**Causes**	**Possible Solutions**
EF7	External Fault (Terminal DI7)	MFDI terminal DI7 caused an external fault through an external device.	1. Find the device that caused the external fault and remove the cause. 2. Clear the external fault input in the MFDI.
		The wiring is incorrect.	Correctly connect the signal line to MFDI terminal DI7.
		External Fault [H1-07 = 20 to 2B] is set to MFDI terminal DI7, but the terminal is not in use.	Correctly set the MFDI.
Note: Do a Fault Reset to clear the fault.			
Code	**Name**	**Causes**	**Possible Solutions**
Err	EEPROM Write Error	There was a problem with the EEPROM hardware.	• Re-energize the drive. • If the fault stays, replace the control board or the drive. Contact the manufacturer or your nearest sales representative to replace the board.
		Electrical interference corrupted the data while it was writing to the EEPROM of the drive.	• Push ENTER Key. • Set the parameters again.
Note: Do a Fault Reset to clear the fault.			
Code	**Name**	**Causes**	**Possible Solutions**
FbH	Excessive PID Feedback	The *FbH* detection level is set incorrectly.	Adjust *b5-36 [PID HiHi Limit Level]* and *b5-37 [PID HiHi Time]*.
		There is a problem with the PID feedback wiring.	Correct errors with the PID control wiring.
		The feedback sensor is not operating correctly.	Examine the sensors on the control device side.

Code	Name	Causes	Possible Solutions
		A fault occurred in the feedback input circuit of the drive.	Replace the control board or the drive. For information about replacing the control board, contact the manufacturer or your nearest sales representative.

Note:
• The drive detects this fault if the PID feedback input is more than the level set in *b5-36* for longer than *b5-37*.
• Do a Fault Reset to clear the fault.
• If the drive detects this fault, it will operate the motor as specified by the stop method set in *b5-12 [Fdback Loss Select Mode]*.

Code	Name	Causes	Possible Solutions
FbL	PID Feedback Loss	The *FbL* detection level is set incorrectly.	Adjust *b5-13 [Fdback Loss Lvl]* and *b5-14 [Fdback Loss Time]*.
		There is a problem with the PID feedback wiring.	Correct errors with the PID control wiring.
		The feedback sensor is not operating correctly.	Examine the sensors on the control device side.
		A fault occurred in the feedback input circuit of the drive.	Replace the control board or the drive. For information about replacing the control board, contact the manufacturer or your nearest sales representative.

Note:
• The drive detects this fault if the PID feedback input is more than the level set in *b5-13* for longer than *b5-14*.
• Do a Fault Reset to clear the fault.
• If the drive detects this fault, it will operate the motor as specified by the stop method set in *b5-12 [Fdback Loss Select Mode]*.

Code	Name	Causes	Possible Solutions
GF	Ground Fault	Overheating caused damage to the motor or the motor insulation is not satisfactory.	Measure the motor insulation resistance, and replace the motor if there is electrical conduction or unserviceable insulation.
		The motor main circuit cable is contacting ground to make a short circuit.	• Examine the motor main circuit cable for damage, and repair short circuits. • Measure the resistance between the motor main circuit cable and the ground terminal. If there is electrical conduction, replace the cable.
		An increase in the stray capacitance of the cable and the ground terminal caused an increase in the leakage current.	• If the wiring length of the cable is more than 100 m, decrease the carrier frequency. • Decrease the stray capacitance.
		There was a problem with the drive hardware.	Replace the control board or the drive. For information about replacing the control board, contact the manufacturer or your nearest sales representative.

Note:
• The drive detects this fault if a current short to ground was more than 50% of rated current on the output side of the drive.
• Do a Fault Reset to clear the fault.
• *L5-08 [U/OV,OH,GF A-Reset Select]* disables the Auto Restart function.

Code	Name	Causes	Possible Solutions
LF	Output Phase Loss	The motor main circuit cable is disconnected.	Connect motor main circuit cable wiring. Correct wiring errors in the main circuit drive input power.
		There is a disconnection in the motor coil winding.	If a coil is disconnected, measure the motor Line-to-Line Resistance and replace the motor.
		The screws on the drive output terminals are loose.	Tighten the terminal screws to the correct tightening torque.
		The rated output current of the motor is less than 5% of the drive rated current.	Examine the drive capacity or the motor output to be applied.
		You are trying to use a single-phase motor.	The drive cannot operate a single-phase motor.
		The output transistor in the drive is damaged.	• Re-energize the drive. • If the fault stays, replace the control board or the drive. For information about replacing the control board, contact the manufacturer or your nearest sales representative.

Note:
• The drive detects this fault if phase loss occurs on the output side of the drive.
• Do a Fault Reset to clear the fault.
• Set *L8-07 [Out PhaseLoss Selection]* to enable and disable *LF* detection.

Code	Name	Causes	Possible Solutions
LF2	Output Current Imbalance	Phase loss occurred in the wiring on the output side of the drive.	Examine for wiring errors or disconnected wires on the output side of the drive, and repair problems.
		The output terminal screws of the drive are loose.	Tighten the terminal screws to the correct tightening torque.
		There is not balance between the three phases of the PM motor impedance.	• Measure the Line-to-Line Resistance for each motor phase and make sure that resistance is equal in the three phases, and that all wires are connected correctly. • Replace the motor.
		The drive output circuit is broken.	• Re-energize the drive. • If the fault stays, replace the control board or the drive. For information about replacing the control board, contact the manufacturer or your nearest sales representative.

Note:
• The drive detects this fault if there is not balance between the three phases of the output current from the PM motor.
• Do a Fault Reset to clear the fault.

Code	Name	Causes	Possible Solutions
LSo	Low Speed Motor Step-Out	The motor code set incorrectly.	• Set *E5-01 [PM Mot Code Selection]* correctly as specified by the motor. • For specialized motors, refer to the motor test report and set *E5-xx* correctly.
		The load is too large.	• Decrease the load. • Replace the drive and motor with larger capacity models.
		An external force on the load side caused the motor to move at start.	Find and repair problems on the load side that cause the motor to rotate from the load side.
		The drive incorrectly detected the motor magnetic pole position.	• Set *b3-01 = 1 [SpSrch@Start Selection = Enabled]*. • If the value for *U6-57 [PoleDis IdDifVal]* is lower than 819, increase the value set in *n8-84 [Polarity Det Current]*. Consult the motor manufacturer for information about maximum setting values.
		The setting of *n8-84 [Polarity Det Current]* is too low.	Increase the n8-84 setting from the default. Consult the motor manufacturer for information about maximum setting values.
		Incorrect values set in *L8-93 [Lso Detect Time]*, *L8-94 [Lso Detect Level]*, and *L8-95 [Lso Amount]*.	Increase the values set in *L8-93 to L8-95*.
		The drive incorrectly detected the motor magnetic pole position.	If you are using an IPM motor, do High Frequency Injection Auto-Tuning.

Note:
• The drive detects this fault if it detects step-out while running at low speed.
• Do a Fault Reset to clear the fault.
• *LSo* is a protective function that stops the motor and stops the reverse run if a motor without a motor code incorrectly detects the initial polarity. To quickly detect motor reversal, decrease the values set in *L8-93* to *L8-95* to a range in which the drive does not malfunction.

Code	Name	Causes	Possible Solutions
nSE	Node Setup Error	The *H1-xx = 7E [Node Setup]* terminal was activated during run.	Stop the drive when the Node Setup function is in use.
		The drive received a Run command while the Node Setup function was active.	

Note:
Do a Fault Reset to clear the fault.

Code	Name	Causes	Possible Solutions
oC	Overcurrent	The load is too heavy.	• Measure the current flowing into the motor. • Replace the drive with a larger capacity model if the current value is more than the drive rated current. • Decrease the load or replace with a larger drive to prevent sudden changes in the current level.
		Overheating caused damage to the motor or the motor insulation is not satisfactory.	Measure the motor insulation resistance, and replace the motor if there is electrical conduction or unserviceable insulation.
		The motor main circuit cable is contacting ground to make a short circuit.	• Examine the motor main circuit cable for damage, and repair short circuits. • Measure the resistance between the motor main circuit cable and the ground terminal. If there is electrical conduction, replace the cable.
		A short circuit or ground fault on the drive output side caused damage to the output transistor of the drive.	• Make sure that there is not a short circuit in terminal B1 and terminals U/T1, V/T2, and W/T3. Make sure that there is not a short circuit in terminals - and terminals U/T1, V/T2, and W/T3. • If there is a short circuit, contact the manufacturer or your nearest sales representative.
		The acceleration time is too short.	• Calculate the torque necessary during acceleration related to the load inertia and the specified acceleration time. • Increase the values set in *C1-01, C1-03, C1-05, or C1-07 [Acceleration Times]* to get the necessary torque. • Increase the values set in *C2-01 to C2-04 [S-Curve Characteristics]* to get the necessary torque. • Replace the drive with a larger capacity model.
		The drive is trying to operate a specialized motor or a motor that is larger than the maximum applicable motor output of the drive.	• Examine the motor nameplate, the motor, and the drive to make sure that the drive rated current is larger than the motor rated current. • Replace the drive with a larger capacity model.
		A magnetic contactor was switched at the output.	Set the operation sequence to not turn ON or OFF the magnetic contactor while the drive is outputting voltage.
		The V/f pattern settings are incorrect.	• Examine the ratios between the V/f pattern frequency and voltage. Decrease the voltage if it is too high compared to the frequency. • Adjust *E1-04 to E1-10 [V/f Pattern Parameters]*. For motor 2, adjust *E3-04 to E3-10*.
		The torque compensation gain is too large.	Decrease the value set in *C4-01 [Trq Comp Gain]* to make sure that the motor does not stall.
		Electrical interference caused a problem.	Examine the control circuit lines, main circuit lines, and ground wiring, and decrease the effects of electrical interference.

Code	Name	Causes	Possible Solutions
		The gain during overexcitation operation is too large.	• Find the time when the fault occurs. • If the fault occurs at the same time as an overexcitation operation, decrease *n3-13 [OverExcBr Gain]* and consider the motor flux saturation.
		The drive received a Run command while the motor was coasting.	• Examine the sequence and input the Run command after the motor fully stops. • Set *b3-01 = 1 [SpSrch@Start Selection = Enabled]* or set *H1-xx = 67, 68 [SpdSrch Fmax, SpdSrch Fref]* to input speed search commands from the MFDI terminals.
		In PM Control Methods, the setting of the motor code is incorrect.	• Enter the correct motor code to *E5-01 [PM Mot Code Selection]* as specified by the PM motor. • For specialized motors, refer to the motor test report and set *E5-xx [PM Motor Settings]* correctly.
		If the drive detects the fault at start or in the low speed range (10% or less) and *n8-57 = 1 [High-Freq Injection = Enabled]* for PM Control methods, the high frequency injection gain is too high.	• Set *E5-xx [PM Motor Parameters]* correctly or do Rotational Auto-Tuning. • Decrease the value of *n8-41 [HFI PoleDet Pgain]* in 0.5-unit increments. **Note:** Set *n8-41 > 0.0* for an ordinary IPM motor.
		The control method is set incorrectly for the motor.	Set *A1-02 [Control Method]* correctly.
		The motor main circuit cable is too long.	• Replace the drive with a larger capacity model. • Decrease *C6-02 [Carrier Frequency Selection]*. Or set *C6-02 = B*.
		Speed search does not complete at start when you set *A1-02 = 8 [EZ Vector]* and use an induction motor.	When *E9-01 = 0 [Motor Type Selection = IM]*, set *b3-24 = 2 [SpSrch Method Selection = Current Det2]*.
		An overcurrent occurred during overexcitation deceleration.	• Decrease *n3-13 [OverExcBr Gain]*. • Decrease *n3-21 [OverExcBr Current Level]*.

Note:
• This fault occurs if the drive sensors detect a drive output current more than the specified overcurrent detection level.
• Do a Fault Reset to clear the fault.

Code	Name	Causes	Possible Solutions
oC2	Overcurrent2	When *A1-02 = 5, 6, 8 [Control Method = PM OLVector, PM AOLVector, or EZ Vector]*, the output current is more than the value set in *L8-27 [OverCurr Det Gain]*.	Correct the value set in *L8-27*.

Note:
• This fault occurs if the drive sensors detect a drive output current more than the specified overcurrent detection level.
• Do a Fault Reset to clear the fault.

Code	Name	Causes	Possible Solutions
oFA00	Option Not Compatible with Port	The option connected to connector CN5 is not compatible.	Connect a correct option.

Note:
• Do a Fault Reset to clear the fault.
• Fault trace is not available for these faults.

Code	Name	Causes	Possible Solutions
oFA01	Option Fault/Connection Error	You changed the option card connected to connector CN5 during operation.	1. De-energize the drive. 2. Refer to the option card manual and correctly connect the option card to the connector on the drive.

Note:
Do a Fault Reset to clear the fault.

Code	Name	Causes	Possible Solutions
oFA03 to oFA06	Option Card Error Occurred at Option Port (CN5)	A fault occurred in the option card.	1. De-energize the drive. 2. Make sure that the option card is correctly connected to the connector. 3. If the problem continues, replace the option card.

Note:
Do a Fault Reset to clear the fault.

Code	Name	Causes	Possible Solutions
oFA10, oFA11	Option Card Error Occurred at Option Port (CN5)	A fault occurred in the option card.	1. De-energize the drive. 2. Make sure that the option card is correctly connected to the connector. 3. If the problem continues, replace the option card.

Note:
Do a Fault Reset to clear the fault.

Code	Name	Causes	Possible Solutions
oFA12 to oFA17	Option Card Connection Error (CN5)	A fault occurred in the option card.	1. De-energize the drive. 2. Make sure that the option card is correctly connected to the connector. 3. If the problem continues, replace the option card.
Note: Do a Fault Reset to clear the fault.			

Code	Name	Causes	Possible Solutions
oFA30 to oFA43	Communication Option Card Connection Error (CN5)	A fault occurred in the option card.	1. De-energize the drive. 2. Make sure that the option card is correctly connected to the connector. 3. If the problem continues, replace the option card.
Note: Do a Fault Reset to clear the fault.			

Code	Name	Causes	Possible Solutions
oH	Heatsink Overheat	The ambient temperature is high and the heatsink temperature of the drive is more than the value set in *L8-02 [Overheat Alm Level]*.	• Measure the ambient temperature. • Increase the airflow in the control panel. • Install a cooling device (cooling fan or air conditioner) to lower the ambient temperature. • Remove objects near the drive that are producing too much heat.
		The load is too heavy.	• Measure the output current. • Decrease the load. • Decrease the value set in *C6-02 [Carrier Frequency Selection]*.
		The internal cooling fan of the drive stopped.	1. Use the procedures in this manual to replace the cooling fan. 2. Set *o4-03 = 0 [Fan.Oper Setting = 0 h]*.
Note: • The drive detects this fault if the heatsink temperature of the drive is more than the value set in *L8-02*. • Do a Fault Reset to clear the fault. • If the drive detects this fault, it will operate the motor as specified by the Stopping Method set in *L8-03 [Overheat Pre-Alarm Selection]*.			

Code	Name	Causes	Possible Solutions
oH1	Heatsink Overheat	The ambient temperature is high and the heatsink temperature of the drive is more than the *oH1* detection level.	• Measure the ambient temperature. • Increase the airflow in the control panel. • Install a cooling device (cooling fan or air conditioner) to lower the ambient temperature. • Remove objects near the drive that are producing too much heat.
		The load is too heavy.	• Measure the output current. • Decrease the load. • Decrease the value set in *C6-02 [Carrier Frequency Selection]*.
Note: • The drive detects this fault if the heatsink temperature of the drive is more than the *oH1* detection level. *o2-04 [Drive KVA Selection]* determines the *oH1* detection level. • Do a Fault Reset to clear the fault. • *L5-08 [U/OV,OH,GF A-Reset Select]* disables the Auto Restart function.			

Code	Name	Causes	Possible Solutions
oH3	Motor Overheat (PTC Input)	The thermistor wiring that detects motor temperature is defective.	Correct wiring errors.
		A fault occurred on the machine. Example: The machine is locked.	Examine the machine and remove the cause of the fault
		The motor has overheated.	• Check the load level, acceleration/deceleration time, and motor start/stop frequency (cycle time). • Decrease the load. • Increase the values set in *C1-01 to C1-08 [Acceleration/Deceleration Times]*. • Set *E2-01 [Mot Rated Current (FLA)]* correctly to the value specified by the motor nameplate. • Make sure that the motor cooling system is operating correctly, and repair or replace it if it is damaged. • Adjust *E1-04 to E1-10 [V/f Pattern Parameters]*. For motor 2, adjust *E3-04 to E3-10*. Decrease the values set in *E1-08 [Mid A Voltage]* and *E1-10 [Min Output Voltage]*. **Note:** If the values set in *E1-08* and *E1-10* are too low, the overload tolerance will decrease at low speeds.
Note: • When *H3-02 or H3-10 = 16 [MFAI Function Select = Mot PTC Input]*, the drive detects this fault if the motor overheat signal input from analog input terminal AI1 or AI2 is more than the alarm detection level. • Do a Fault Reset to clear the fault. • If the drive detects this fault, it will operate the motor as specified by the Stopping Method set in *L1-03 [Motor oH AL Reaction Select]*.			

Code	Name	Causes	Possible Solutions
oH4	Motor Overheat Fault (PTC Input)	The motor has overheated.	• Check the load level, acceleration/deceleration time, and motor start/stop frequency (cycle time). • Decrease the load. • Increase the values set in *C1-01 to C1-08 [Acceleration/ Deceleration Times]*. • Set *E2-01 [Mot Rated Current (FLA)]* correctly to the value specified by the motor nameplate. • Make sure that the motor cooling system is operating correctly, and repair or replace it if it is damaged. • Adjust *E1-04 to E1-10 [V/f Pattern Parameters]*. For motor 2, adjust *E3-04 to E3-10*. Decrease the values set in *E1-08 [Mid A Voltage]* and *E1-10 [Min Output Voltage]*. **Note:** If the values set in *E1-08* and *E1-10* are too low, the overload tolerance will decrease at low speeds.

Note:
• The drive detects this fault if the motor overheat signal in analog input terminals A1, or A2 is more than the Fault detection level. (If *H3-02, H3-10= 16 [AI1/AI2 Function Select = Mot PTC Input]*.)
• Do a Fault Reset to clear the fault.

Code	Name	Causes	Possible Solutions
oL1	Motor Overload	The load is too large.	Decrease the load. **Note:** Reset *oL1* when *U4-16 [MotorOLEstimate (oL1)]* < 100.
		The acceleration/deceleration times or cycle times are too short.	• Examine the acceleration/deceleration times and the motor start/stop frequencies (cycle times). • Increase the values set in *C1-01 to C1-08 [Acceleration/ Deceleration Times]*.
		Overload occurred while running at low speed.	• Decrease the load when running at low speed. • Increase the motor speed. • If the motor is run frequently at low speeds, replace the motor with a larger motor or use a drive-dedicated motor. **Note:** For general-purpose motors, overload can occur while running at low speed when operating at below the rated current.
		L1-01 [Motor Cool Type for OL1 Calc] is set incorrectly.	Set *L1-01* in as specified by the motor qualities for a drive-dedicated motor.
		The V/f pattern does not fit the motor qualities.	• Examine the ratios between the V/f pattern frequency and voltage. Decrease the voltage if it is too high compared to the frequency. • Adjust *E1-04 to E1-10 [V/f Pattern Parameters]*. For motor 2, adjust *E3-04 to E3-10*. Decrease the values set in *E1-08 [Mid A Voltage]* and *E1-10 [Min Output Voltage]*. **Note:** If the values set in *E1-08* and *E1-10* are too low, the overload tolerance will decrease at low speeds.
		E1-06 [Base Frequency] is set incorrectly.	Set *E1-06* to the rated frequency shown on the motor nameplate.
		One drive is operating more than one motor.	Set *L1-01 = 0 [Motor Cool Type for OL1 Calc = Disabled]*, connect thermal overload relay to each motor to prevent damage to the motor.
		The electronic thermal protector qualities and the motor overload properties do not match.	• Examine the motor qualities and set *L1-01 [Motor Cool Type for OL1 Calc]* correctly. • Connect a thermal overload relay to the motor.
		The electronic thermal protector is operating at an incorrect level.	Set *E2-01 [Mot Rated Current (FLA)]* correctly to the value specified by the motor nameplate.
		There is increased motor loss from overexcitation operation.	• Lower the value set in *n3-13 [OverExcBr Gain]*. • Set *L3-50 ≠ 3 or 4 [StallP@Decel Mode ≠ HiFlux Overexcitation or HiFlux2 Overexcitation]*. • Set *L3-04 = 0 [StallP@Decel Enable = Disabled]*.
		The speed search-related parameters are set incorrectly.	• Examine the settings for all speed search related parameters. • Adjust *b3-03 [SpSrch Deceleration Time]*. • Set *b3-24 = 1 [SpSrch Method Selection = Speed Estimation]* after Auto-Tuning.
		Phase loss in the input power supply is causing the output current to change.	Make sure that there is no phase loss, and repair problems.
		The motor main circuit cable is too long.	• Replace the drive with a larger capacity model. • Decrease *C6-02 [Carrier Frequency Selection]*. Or set *C6-02 = B*.

Note:
• The drive detects this fault if the electronic thermal protector of the drive started the motor overload protection.
• Do a Fault Reset to clear the fault.
• *L5-07 [OL1-4 Auto-Reset Select]* disables the Auto Restart function.

Code	Name	Causes	Possible Solutions
oL2	Drive Overload	The load is too large.	Decrease the load.
		The acceleration/deceleration times or cycle times are too short.	• Examine the acceleration/deceleration times and the motor start/stop frequencies (cycle times). • Increase the values set in *C1-01 to C1-08 [Acceleration/ Deceleration Times]*.
		The V/f pattern does not fit the motor qualities.	• Examine the ratios between the V/f pattern frequency and voltage. Decrease the voltage if it is too high compared to the frequency. • Adjust *E1-04 to E1-10 [V/f Pattern Parameters]*. Decrease the values set in *E1-08 [Mid A Voltage]* and *E1-10 [Min Output Voltage]*. For motor 2, adjust *E3-04 to E3-10*. **Note:** If the values set in *E1-08* and *E1-10* are too low, the overload tolerance will decrease at low speeds.
		The drive capacity is too small.	Replace the drive with a larger capacity model.
		Overload occurred while running at low speed.	• Decrease the load when running at low speed. • Replace the drive with a larger capacity model. • Decrease the value set in *C6-02 [Carrier Frequency Selection]*.
		The torque compensation gain is too large.	Decrease the value set in *C4-01 [Trq Comp Gain]* to make sure that the motor does not stall.
		The speed search-related parameters are set incorrectly.	• Examine the settings for all speed search-related parameters. • Adjust *b3-03 [SpSrch Deceleration Time]*. • Set *b3-24 = 1 [SpSrch Method Selection = Speed Estimation]* after Auto-Tuning.
		Phase loss in the input power supply is causing the output current to change.	• Correct errors with the wiring for main circuit drive input power. • Make sure that there is no phase loss, and repair problems.
		Overload occurred during overexcitation deceleration.	• Decrease the value set in *n3-13 [OverExcBr Gain]*. • Decrease the value set in *n3-21 [OverExcBr Current Level]*.

Note:
• The drive detects this fault if the electronic thermal protector of the drive started the drive overload protection.
• Do a Fault Reset to clear the fault.
• *L5-07 [OL1-4 Auto-Reset Select]* disables the Auto Restart function.

Code	Name	Causes	Possible Solutions
oL3	Overtorque Detection 1	A fault occurred on the machine. Example: The machine is locked.	Examine the machine and remove the cause of the fault.
		The parameters are incorrect for the load.	Adjust *L6-02 [Trq Det1 Level]* and *L6-03 [Trq Det1 Time]* settings.

Note:
• The drive detects this fault if the drive output current is more than the level set in *L6-02* for longer than *L6-03*.
• Do a Fault Reset to clear the fault.
• If the drive detects this fault, it will operate the motor as specified by the Stopping Method set in *L6-01 [Trq Det1 Select]*.
• *L5-07 [OL1-4 Auto-Reset Select]* disables the Auto Restart function.

Code	Name	Causes	Possible Solutions
oL4	Overtorque Detection 2	A fault occurred on the machine. Example: The machine is locked.	Examine the machine and remove the cause of the fault.
		The parameters are incorrect for the load.	Adjust *L6-05 [Trq Det2 Level]* and *L6-06 [Trq Det2 Time]* settings.

Note:
• The drive detects this fault if the drive output current is more than the level set in *L6-05* for longer than *L6-06*.
• Do a Fault Reset to clear the fault.
• If the drive detects this fault, it will operate the motor as specified by the Stopping Method set in *L6-04 [Trq Det2 Select]*.
• *L5-07 [OL1-4 Auto-Reset Select]* disables the Auto Restart function.

Code	Name	Causes	Possible Solutions
oL5	Mechanical Weakening Detection 1	The drive detected overtorque as specified by the conditions for mechanical weakening detection set in *L6-08 [MechF Enable]*.	Do a deterioration diagnostic test on the machine side.

Note:
• Do a Fault Reset to clear the fault.
• If the drive detects this fault, it will operate the motor as specified by the Stopping Method set in *L6-08*.

Code	Name	Causes	Possible Solutions
oL7	High Slip Braking Overload	The load inertia is too large.	• Decrease deceleration times in *C1-02, C1-04, C1-06, and C1-08 [Deceleration Times]* for applications that do not use High Slip Braking. • Use a braking resistor to decrease the deceleration time.
		An external force on the load side rotated the motor.	
		Something is preventing deceleration on the load side.	
		The value set in *n3-04 [HSB Overload Time]* is too small.	• Increase the value set in *n3-04*. • Connect a thermal overload relay to the motor, and set *n3-04 = 1200 s (maximum value)*.

Note:
• The drive detects this fault if the output frequency is constant for longer than *n3-04*.
• Do a Fault Reset to clear the fault.

Code	Name	Causes	Possible Solutions
oPr	Keypad Connection Fault	The keypad is not securely connected to the connector on the drive.	Examine the connection between the keypad and the drive.
		The connection cable between the drive and the keypad is disconnected.	• Remove the keypad and then reconnect it. • Replace the cable if damaged.

Note:
• The drive detects this fault if these conditions are correct:
– *o2-06 = 1 [Keypad Disconnect Detection = Enabled]*.
– *b1-02 = 0 [Run Comm. Sel 1 = Keypad]*, or the drive is operating in LOCAL Mode with the keypad.
• Do a Fault Reset to clear the fault.

Code	Name	Causes	Possible Solutions
oS	Overspeed	There is overshoot.	• Decrease *C5-01 [ASR PGain 1]* and increase *C5-02 [ASR ITime 1]*. • Use *H6-02 to H6-05 [Pulse Train Input Setting Parameters]*to adjust the pulse train gain.
		There is an incorrect number of PG pulses set in the drive.	Set *H6-02 [PI Frequency Scale]* to the pulse train frequency during 100% reference (maximum motor rotation speed).
		The *oS* detection level is set incorrectly.	Adjust *F1-08 [Overspeed Level]* and *F1-09 [Overspeed Delay Time]*.
		If the drive detects the fault at start or in the low speed range (10% or less) and *n8-57 = 1 [High-Freq Injection = Enabled]* for PM Control methods, the high frequency injection gain is too high.	• Set *E5-xx [PM Motor Parameters]* correctly or do Rotational Auto-Tuning. • Decrease the value of *n8-41 [HFI PoleDet Pgain]* in 0.5 unit increments. **Note:** Set *n8-41 > 0.0* for IPM motors.

Note:
• The drive detects this fault if the motor speed is more than the value set in *F1-08* for longer than *F1-09*.
• Do a Fault Reset to clear the fault.
• If the drive detects this fault, it will operate the motor as specified by the Stopping Method set in *F1-03 [Overspeed Detection Selection]*.

Code	Name	Causes	Possible Solutions
ov	Overvoltage	The deceleration time is too short and too much regenerative energy is flowing back into the drive.	• Increase the values set in *C1-02, C1-04, C1-06, or C1-08 [Deceleration Times]*. • Connect a dynamic braking option to the drive. • Perform Deceleration Rate Tuning.
		The acceleration time is too short.	• Make sure that sudden drive acceleration does not cause the fault. • Increase the values set in *C1-01, C1-03, C1-05, or C1-07 [Acceleration Times]*. • Increase the value set in *C2-02 [Jerk@End of Accel]*. • Set *L3-11 = 1 [Overvolt Supression Select = Enabled]*.
		The braking load is too large.	Connect a dynamic braking option to the drive.
		There are surge voltages in the input power supply	Connect a DC reactor to the drive. **Note:** If you turn the phase advancing capacitors ON and OFF and use thyristor converters in the same power supply system, there can be surge voltages that irregularly increase the input voltage.
		The drive output cable or motor is shorted to ground (the current short to ground is charging the main circuit capacitor of the drive through the power supply).	1. Examine the motor main circuit cable, terminals, and motor terminal box, and then remove ground faults. 2. Re-energize the drive.
		If the drive detects ov in these conditions, the speed search-related parameters are incorrect. • During speed search • During momentary power loss recovery • When the drive starts again automatically	• Examine the settings for all speed search related parameters. • Set *b3-19 ≠ 0 [Speed Retry Times ≠ 0 times]*. • Adjust *b3-03 [SpSrch Deceleration Time]*. • Do Stationary Auto-Tuning for Line-to-Line Resistance and then set *b3-24 = 1 [SpSrch Method Selection = Speed Estimation]*.
		The power supply voltage is too high.	Decrease the power supply voltage to match the drive rated voltage.

Code	Name	Causes	Possible Solutions
		The braking resistor or braking resistor unit wiring is incorrect.	Correct wiring errors in the connection to the braking resistor or braking resistor unit.
		Electrical interference caused a drive malfunction.	• Examine the control circuit lines, main circuit lines, and ground wiring, and decrease the effects of electrical interference. • Make sure that a magnetic contactor is not the source of the electrical interference, then use a Surge Protective Device if necessary.
		The load inertia is set incorrectly.	• Examine the load inertia settings with KEB, overvoltage suppression, or stall prevention during deceleration. • Adjust *L3-25 [Load Inertia Ratio]* to match the qualities of the machine.
		The Short Circuit Braking function used in OLV/PM control method.	Connect a braking resistor to the drive.
		There is motor hunting.	• Set *n1-01 = 1 [HuntPrev Selection = Enabled]* and adjust *n1-02 [HuntPrev Gain Setting]*. • Adjust *n2-02 [AFR Time 1]* and *n2-03 [AFR Time 2]*. • Adjust *n8-45 [SpdFbck Det.Gain]* and *n8-47 [Pull-In Comp. Time Constant]*.
		Speed search does not complete at start when you set *A1-02 = 8 [EZ Vector]* and use an induction motor.	When *E9-01 = 0 [Motor Type Selection = IM]*, set *b3-24 = 2 [SpSrch Method Selection = Current Det2]*.

Note:
• The drive detects this error if the DC bus voltage is more than the *ov* detection level while the drive is running.
• The *ov* detection level is approximately 410 V with 200 V class drives. The detection level is approximately 820 V for 400 V class drives.
• Do a Fault Reset to clear the fault.
• *L5-08 [U/OV,OH,GFA-Reset Select]* disables the Auto Restart function.

Code	Name	Causes	Possible Solutions
PE1, PE2	PLC Faults	The communication option detected a fault.	Refer to the manual for the communication option card.

Note:
Do a Fault Reset to clear the fault.

Code	Name	Causes	Possible Solutions
PF	Input Phase Loss	There is a phase loss in the drive input power.	Correct errors with the wiring for main circuit drive input power.
		There is loose wiring in the drive input power terminals.	Tighten the terminal screws to the correct tightening torque.
		The drive input power voltage is changing too much.	• Examine the input power for problems. • Make the drive input power stable. • If the input power supply is good, examine the magnetic contactor on the main circuit side for problems.
		There is unsatisfactory balance between voltage phases.	• Examine the input power for problems. • Make the drive input power stable. • Set *L8-05 = 0 [In PhaseLoss Selection = Disabled]*.
		The main circuit capacitors have become unserviceable.	• Examine the capacitor maintenance time in monitor *U4-05 [Capacitor Maintenance]*. If *U4-05* is more than 90%, replace the control board or the drive. For information about replacing the control board, contact the manufacturer or your nearest sales representative. • If drive input power is correct and the fault stays, replace the control board or the drive. For information about replacing the control board, contact the manufacturer or your nearest sales representative.

Note:
• The drive detects this error if the DC bus voltage changes irregularly without regeneration.
• Do a Fault Reset to clear the fault.
• Use *L8-05* to enable and disable *PF* detection.

Code	Name	Causes	Possible Solutions
PGo	Encoder (PG) Feedback Loss	The holding brake is stopping the motor.	Release the holding brake.

Note:
• Do a Fault Reset to clear the fault.
• If the drive detects this error, it will operate the motor as specified by the Stopping Method set in *F1-02 [PGOpen Detection Select]*.

Code	Name	Causes	Possible Solutions
rF	Braking Resistor Fault	The resistance of the dynamic braking option connected to the drive is too low.	Use a dynamic braking option that fits the model and duty rating of the drive.
		A regenerative converter or regenerative unit is connected to the drive.	Set *L8-55 = 0 [DB IGBT Protection = Disable]*.

Note:
Do a Fault Reset to clear the fault.

Code	Name	Causes	Possible Solutions
rH	Braking Resistor Overheat	The deceleration time is too short and excessive regenerative energy is flowing back into the drive.	• Check the load level, deceleration time, and speed. • Decrease the load. • Increase the values set in *C1-02, C1-04, C1-06, or C1-08 [Deceleration Times]*. • Use a dynamic braking option that lets you use more power.
		The duty cycle is too high.	Examine the duty cycle. **Note:** When *L8-01 = 1 [3%ERF DBR Protection = Enabled]*, the maximum braking duty cycle is 3%.
		The braking load is too heavy.	• Calculate the braking load and braking power again, and decrease the braking load. • Use a braking resistor that improves braking power.
		The braking resistor is not sufficient.	Use the braking resistor specifications to select a sufficient braking resistor.

Note:
• The drive detects this error if the braking resistor overheat protective function is active.
• The magnitude of the braking load causes the braking resistor overheat alarm, NOT the surface temperature. If the duty cycle is higher than the braking resistor rating, the drive will show the alarm.
• Do a Fault Reset to clear the fault.
• Parameter *L8-01* enables and disables *rH* detection.

Code	Name	Causes	Possible Solutions
rr	Dynamic Braking Transistor Fault	The drive control circuit is damaged.	• Re-energize the drive. • If the fault stays, replace the control board or the drive. For information about replacing the control board, contact the manufacturer or your nearest sales representative.
		There is a malfunction in the internal braking transistor of the drive.	

Note:
Do a Fault Reset to clear the fault.

Code	Name	Causes	Possible Solutions
SC	Short Circuit/IGBT Failure	Overheating caused damage to the motor or the motor insulation is not satisfactory.	Measure the motor insulation resistance, and replace the motor if there is electrical conduction or unserviceable insulation.
		The motor main circuit cable is contacting ground to make a short circuit.	• Examine the motor main circuit cable for damage, and repair short circuits. • Measure the resistance between the motor main circuit cable and the ground terminal. If there is electrical conduction, replace the cable.
		A short circuit or ground fault on the drive output side caused damage to the output transistor of the drive.	• Make sure that there is not a short circuit in terminal B1 and terminals U/T1, V/T2, and W/T3. Make sure that there is not a short circuit in terminals - and terminals U/T1, V/T2, and W/T3. • If there is a short circuit, contact the manufacturer or your nearest sales representative.
		When *A1-02 = 5, 6 [Control Method = PM OLVector or PM AOLVector]*, the output current is more than the value set in *L8-27 [OverCurr Det Gain]*.	Set *L8-27* correctly.

Note:
• The drive detects this error if there is a short circuit or ground fault on the drive output side, or an IGBT failure.
• Do a Fault Reset to clear the fault.

Code	Name	Causes	Possible Solutions
SCF	Safety Circuit Fault	The safety circuit is broken.	Replace the control board or the drive. For information about replacing the control board, contact the manufacturer or your nearest sales representative.

Note:
Do a Fault Reset to clear the fault.

Code	Name	Causes	Possible Solutions
SEr	Speed Search Retries Exceeded	The speed search-related parameters are set incorrectly.	• Decrease the value set in *b3-10 [Speed Det Gain for Estimation]*. • Increase the value set in *b3-17 [Speed Retry Current Level]*. • Increase the value set in *b3-18 [Speed Retry Delay]*. • Do Auto-Tuning again.
		The motor is coasting in the opposite direction of the Run command.	Set *b3-14 = 1 [Speed Bi-Directional Search = Enabled]*.

Note:
• The drive detects this error if the number of speed search restarts is more than the value set in *b3-19 [Speed Retry Times]*.
• Do a Fault Reset to clear the fault.

Code	Name	Causes	Possible Solutions
STPo	Motor Step-Out Detected	The motor code is set incorrectly for PM Control Methods.	• Set *E5-01 [PM Mot Code Selection]* correctly as specified by the motor. • For specialized motors, refer to the motor test report and set *E5-xx* correctly.
		The load is too large.	• Increase the value set in *n8-55 [Load Inertia]*. • Increase the value set in *n8-51 [Ac/Dec Pull-In Current]*. If the drive detects *STPo* during deceleration when increasing the value set in *n8-51*, set the value of *n8-79 [Pull-In Curr@Deceleration]* lower than *n8-51*. • Decrease the load. • Replace the drive and motor with larger capacity models.
		The load inertia is too large.	Increase the value set in *n8-55*.
		The acceleration/deceleration times are too short.	• Increase the values set in *C1-01 to C1-08 [Acceleration/ Deceleration Times]*. • Increase the value set in *C2-01 [Jerk@Start of Accel]*.
		Speed response is too slow.	Increase the value set in *n8-55*.
Note: Do a Fault Reset to clear the fault.			
Code	**Name**	**Causes**	**Possible Solutions**
TiM	Keypad Time Not Set	There is a battery in the keypad, but the date and time are not set.	Use the keypad to set the date and time.
Note: • Do a Fault Reset to clear the fault. • Parameter *o4-24 [bAT Detection Selection]* enables and disables *TiM* detection.			
Code	**Name**	**Causes**	**Possible Solutions**
UL3	Undertorque Detection 1	A fault occurred on the machine. Example: There is a broken pulley belt.	Examine the machine and remove the cause of the fault.
		The parameters are incorrect for the load.	Adjust *L6-02 [Trq Det1 Level]* and *L6-03 [Trq Det1 Time]* settings.
Note: • The drive detects this error if the drive output current is less than the level set in *L6-02* for longer than *L6-03*. • Do a Fault Reset to clear the fault. • If the drive detects this error, it will operate the motor as specified by the Stopping Method set in *L6-01 [Trq Det1 Select]*.			
Code	**Name**	**Causes**	**Possible Solutions**
UL4	Undertorque Detection 2	A fault occurred on the machine. Example: There is a broken pulley belt.	Examine the machine and remove the cause of the fault.
		The parameters are incorrect for the load.	Adjust *L6-05 [Trq Det2 Level]* and *L6-06 [Trq Det2 Time]* settings.
Note: • The drive detects this error if the drive output current is less than the level set in *L6-05* for longer than *L6-06*. • Do a Fault Reset to clear the fault. • If the drive detects this error, it will operate the motor as specified by the Stopping Method set in *L6-04 [Trq Det2 Select]*.			
Code	**Name**	**Causes**	**Possible Solutions**
UL5	Mechanical Weakening Detection 2	The drive detected undertorque as specified by the conditions for mechanical weakening detection set in *L6-08 [MechF Enable]*.	Examine the machine for deterioration.
Note: • Do a Fault Reset to clear the fault. • If the drive detects this error, it will operate the motor as specified by the Stopping Method set in *L6-08*.			
Code	**Name**	**Causes**	**Possible Solutions**
Uv1	DC Bus Undervoltage	There is a phase loss in the drive input power.	Correct errors with the wiring for main circuit drive input power.
		There is loose wiring in the drive input power terminals.	Tighten the terminal screws to the correct tightening torque.
		The drive input power voltage is changing too much.	• Examine the input power for problems. • Make the drive input power stable. • If the input power supply is good, examine the magnetic contactor on the main circuit side for problems.
		There was a loss of power.	Use a better power supply.
		The main circuit capacitors have become unserviceable.	Examine the capacitor maintenance time in monitor *U4-05 [Capacitor Maintenance]*. If *U4-05* is more than 90%, replace the control board or the drive. For information about replacing the control board, contact the manufacturer or your nearest sales representative.

Code	Name	Causes	Possible Solutions
		The relay or contactor on the soft-charge bypass relay is damaged.	*U4-06 [SoftChgRelay Maint]* shows the performance life of the soft-charge bypass relay. If *U4-06* is more than 90%, replace the board or the drive. For information about replacing the board, contact the manufacturer or your nearest sales representative.

Note:
- The drive detects this error if the DC bus voltage decreases below the level set in *L2-05 [UV Detection Lvl (Uv1)]* while the drive is running.
- The *Uv1* detection level is approximately 190 V for a 200 V class drives. The detection level is approximately 380 V for 400 V class drives. The detection level is approximately 350 V when *E1-01 [Input AC Supply Voltage]* < 400.
- Do a Fault Reset to clear the fault.
- Fault trace is not available for this fault.
- *L5-08 [U/OV,OH,GF A-Reset Select]* disables the Auto Restart function.

Code	Name	Causes	Possible Solutions
Uv2	Control Power Undervoltage	The value set in *L2-02 [RideThrough Time@Power Loss]* increased and the momentary power loss recovery unit is not connected to the drive.	Connect the momentary power loss recovery unit to the drive.
		There was a problem with the drive hardware.	• Re-energize the drive. • If the fault stays, replace the control board or the drive. For information about replacing the control board, contact the manufacturer or your nearest sales representative.

Note:
- The drive detects this error if the control power supply voltage decreases.
- Do a Fault Reset to clear the fault.
- Fault trace is not available for this fault.

Code	Name	Causes	Possible Solutions
Uv3	Soft Charge Answerback Fault	The relay or contactor on the soft-charge bypass relay is damaged.	• Re-energize the drive. • If the fault stays, replace the control board or the drive. • Check monitor *U4-06 [SoftChgRelay Maint]* shows the performance life of the soft-charge bypass relay. If *U4-06* is more than 90%, replace the board or the drive. For information about replacing the control board, contact the manufacturer or your nearest sales representative.

Note:
- Do a Fault Reset to clear the fault.
- Fault trace is not available for these faults.

7.5 Minor Faults/Alarms

This section gives information about the causes and possible solutions when a minor fault or alarm occurs. Use the information in this table to remove the cause of the minor fault or alarm.

Code	Name	Causes	Possible Solutions
AEr	Station Address Setting Error	The node address for the communication option is not in the permitted setting range.	• For CC-Link communication, set *F6-10 [CCLink Node Address]* correctly. • For MECHATROLINK communication, set *F6-20 [MLII Address]* correctly. • For CANopen communication, set *F6-35 [CANopen Address]* correctly.
Note: If the drive detects this error, the terminal set to *H2-01 to H2-03 = 4 [MFDO Function Select = Alarm]* will activate.			
Code	**Name**	**Causes**	**Possible Solutions**
bAT	Keypad Battery Low Voltage	The keypad battery voltage is low.	Replace the keypad battery.
Note: • If the drive detects this error, the terminal set to *H2-01 to H2-03 = 4 [MFDO Function Selection = Alarm]* will activate. • *Parameter o4-24 [bAT Detection Selection]* enables and disables *bAT* detection.			
Code	**Name**	**Causes**	**Possible Solutions**
bb	Baseblock	An external baseblock command was entered through MFDI terminal DI1 to DI7, and the drive output stopped as shown by an external baseblock command.	Examine the external sequence and timing of the baseblock command input.
Note: The drive will not output a minor fault signal for this alarm.			
Code	**Name**	**Causes**	**Possible Solutions**
bCE	Bluetooth Communication Error	The smartphone or tablet with Q2dev Mobile installed is too far from the keypad.	Use the smartphone or tablet 10 m (32.8 ft) or nearer to the keypad. **Note:** *bCE* can occur when the smartphone or tablet is 10 m or nearer to the keypad depending on the specifications of the smartphone or tablet.
		Radio waves from a different device are causing interference with the communication between the smartphone or tablet and keypad.	Make sure that no device around the keypad uses the same radio bandwidth (2400 MHz to 2480 MHz), and prevent radio interference.
Note: • The drive detects this error when you operate the drive with a smartphone or tablet with a Bluetooth LCD Keypad. • If the drive detects this error, the terminal assigned to *H2-01 to H2-03 = 4 [MFDO Function Select = Alarm]* will activate. • Parameter *o2-27 [BLE Disconn.Selection@BLE Ctrl]* enables and disables *bCE* detection.			
Code	**Name**	**Causes**	**Possible Solutions**
boL	Braking Transistor Overload	The duty cycle of the braking transistor is high (the regeneration power or repetition frequency is high).	• Install a regenerative converter. • Increase the deceleration time.
		You enabled the protective function for the braking transistor when you have a regenerative converter.	Set *L8-55 = 0 [DB IGBT Protection = Disable]*.
		The braking transistor in the drive is broken.	Replace the drive.
Note: If the drive detects this error, the terminal set to *H2-01 to H2-03 = 4 [MFDO Function Select = Alarm]* will activate.			
Code	**Name**	**Causes**	**Possible Solutions**
bUS	Option Communication Error	The communications cable wiring is incorrect.	Correct wiring errors.
		There is a short-circuit in the communications cable or the communications cable is not connected.	• Repair short circuits and connect cables. • Replace the defective communications cable.
		Electrical interference caused a communication data error.	• Examine the control circuit lines, main circuit lines, and ground wiring, and decrease the effects of electrical interference. • Make sure that a magnetic contactor is not the source of the electrical interference, then use a Surge Protective Device if necessary. • Use only the recommended cables or other shielded line. Ground the shield on the controller side or the drive input power side. • Separate the communication wiring from drive power lines, and install a noise filter to the input side of the power supply for communication. • Decrease the effects of electrical interference from the controller.
		The option card is incorrectly installed to the drive.	Correctly install the option card to the drive.

Code	Name	Causes	Possible Solutions
		The option card is damaged.	If the alarm continues and the wiring is correct, replace the option card.

Note:
• The drive detects this error if the Run command or frequency reference is assigned to the option card.
• If the drive detects this error, the terminal set to *H2-01 to H2-03 = 4 [MFDO Function Select = Alarm]* will activate.
• If the drive detects this error, it will operate the motor as specified by the stopping method set in *F6-01 [Comm.Error Selection]*.

Code	Name	Causes	Possible Solutions
CALL	Serial Comm Transmission Error	The communications cable wiring is incorrect.	Correct wiring errors.
		There is a short-circuit in the communications cable or the communications cable is not connected.	• Repair the short-circuited or disconnected portion of the cable. • Replace the defective communications cable.
		A programming error occurred on the controller side.	Examine communications at start-up and correct programming errors.
		The communications circuitry is damaged.	• Do a self-diagnostics check. • If the problem continues, replace the control board or the drive. For information about replacing the control board, contact the manufacturer or your nearest sales representative.
		The termination resistor setting for Modbus communications is incorrect.	On the last drive in a Modbus network, set DIP switch S2 to the ON position to enable the termination resistor.

Note:
• The drive detects this error if it does not correctly receive control data from the controller when energizing the drive.
• If the drive detects this error, the terminal set to *H2-01 to H2-03 = 4 [MFDO Function Select = Alarm]* will activate.

Code	Name	Causes	Possible Solutions
CE	Modbus Communication Error	The communications cable wiring is incorrect.	Correct wiring errors.
		There is a short-circuit in the communications cable or the communications cable is not connected.	• Repair short circuits and connect cables. • Replace the defective communications cable.
		Electrical interference caused a communication data error.	• Examine the control circuit lines, main circuit lines, and ground wiring, and decrease the effects of electrical interference. • Make sure that a magnetic contactor is not the source of the electrical interference, then use a Surge Protective Device if necessary. • Use only the recommended cables or other shielded line. Ground the shield on the controller side or the drive input power side. • Separate the communication wiring from drive power lines, and install a noise filter to the input side of the power supply for communication. • Decrease the effects of electrical interference from the controller.
		The communication protocol is not compatible.	• Examine the values set in *H5-xx*. • Examine the settings on the controller side and correct the difference in communication conditions.
		The value set in *H5-09 [Mbus CE Detect Time]* is too small for the communications cycle.	• Change the controller software settings. • Increase the value set in *H5-09*.
		The controller software or hardware is causing a communication problem.	Examine the controller and remove the cause of the problem.

Note:
• The drive detects this error if it does not correctly receive control data for the *CE* detection time set to *H5-09*.
• If the drive detects this error, the terminal set to *H2-01 to H2-03 = 4 [MFDO Function Select = Alarm]* will activate.
• If the drive detects this error, it will operate the motor as specified by the stopping method set in *H5-04 [Mbus Error Stop]*.

Code	Name	Causes	Possible Solutions
CP1	Comparator 1 Limit Error	The monitor value set in *H2-20 [Compare1 Mon. Selection]* was in the range of *H2-21 [Compare1 Low Limit]* and *H2-22 [Compare1 Up Limit]*.	Examine the monitor value and remove the cause of the fault.

Note:
• The drive detects this error when the terminal is assigned to *H2-01 to H2-03 = 3C [MFDO Function Select = Comparator 1]*.
• If the drive detects this error, the terminal set to *H2-01 to H2-03 = 4 [MFDO Function Select = Alarm]* will activate.
• Parameter *H2-33 [Compare1 Protection Selection]* enables and disables *CP1* detection.

Code	Name	Causes	Possible Solutions
CP2	Comparator 2 Limit Error	The monitor value set in *H2-26 [Compare2 Mon. Selection]* was outside the range of *H2-27 [Compare2 Low Limit]* and *H2-28 [Compare2 Up Limit]*.	Examine the monitor value and remove the cause of the fault.

Note:
• The drive detects this error when the terminal is assigned to *H2-01 to H2-03 = 3D [MFDO Function Select = Comparator 2]*.
• If the drive detects this error, the terminal set to *H2-01 to H2-03 = 4 [MFDO Function Selection = Alarm]* will activate.
• Parameter *H2-35 [Compare2 Protection Selection]* enables and disables *CP2* detection.

Code	Name	Causes	Possible Solutions
CrST	Cannot Reset	The drive received a fault reset command when a Run command was active.	Turn off the Run command then de-energize and re-energize the drive.

Code	Name	Causes	Possible Solutions
CyC	MECHATROLINK CommCycleSettingErr	The communications cycle setting of the controller is not in the permitted range of the MECHATROLINK interface option.	Set the communications cycle of the controller in the permitted range of the MECHATROLINK interface option.
Note: If the drive detects this error, the terminal set to *H2-01 to H2-03 = 4 [MFDO Function Selection = Alarm]* will activate.			
Code	**Name**	**Causes**	**Possible Solutions**
CyPo	Cycle Power to Accept Changes	Although *F6-15 = 1 [Comm. Option Parameters Reload = Reload Now]*, the drive does not update the communication option parameters.	Re-energize the drive to update the communication option parameters.
Code	**Name**	**Causes**	**Possible Solutions**
dEv	Speed Deviation	The load is too large.	Decrease the load.
		The acceleration/deceleration times are too short.	Increase the values set in *C1-01 to C1-08 [Acceleration/ Deceleration Times]*.
		The *dEv* detection level settings are incorrect.	Adjust *F1-10 [Speed Dev Level]* and *F1-11 [Speed Dev Delay Time]*.
		The load is locked up.	Examine the machine.
		The holding brake is stopping the motor.	Release the holding brake.
Note: • The drive detects this error if the difference between the detected speed and the speed reference is more than the setting of *F1-10* for longer than *F1-11*. • If the drive detects this error, the terminal set to *H2-01 to H2-03 = 4 [MFDO Function Select = Alarm]* will activate. • If the drive detects this error, it will operate the motor as specified by the stopping method set in *F1-04 [Speed Dev Detection Select]*.			
Code	**Name**	**Causes**	**Possible Solutions**
dnE	Drive Disabled	A terminal set for *H1-xx = 1A [Drive Enable]* turned OFF.	Examine the operation sequence.
Note: If the drive detects this error, the terminal set to *H2-01 to H2-03 = 4 [MFDO Function Select = Alarm]* will activate.			
Code	**Name**	**Causes**	**Possible Solutions**
qAL2	Q2pack Alarm 2	There was an error in the Q2pack program.	Examine the Q2pack program and remove the cause of the fault. This is not a drive fault.
Note: If the drive detects this error, the terminal set to *H2-01 to H2-03 = 4 [MFDO Function Select = Alarm]* will activate.			
Code	**Name**	**Causes**	**Possible Solutions**
qAL3	Q2pack Alarm 3	There was an error in the Q2pack program.	Examine the Q2pack program and remove the cause of the fault. This is not a drive fault.
Note: If the drive detects this error, the terminal set to *H2-01 to H2-03 = 4 [MFDO Function Select = Alarm]* will activate.			
Code	**Name**	**Causes**	**Possible Solutions**
qAL1	Q2pack Alarm	There was an error in the Q2pack program.	Examine the Q2pack program and remove the cause of the fault. This is not a drive fault.
Note: If the drive detects this error, the terminal set to *H2-01 to H2-03 = 4 [MFDO Function Select = Alarm]* will activate.			
Code	**Name**	**Causes**	**Possible Solutions**
E5	MECHATROLINK Watchdog Timer Err	The drive detected a watchdog circuit exception while it received data from the controller.	Examine the MECHATROLINK cable connection. If this error occurs frequently, examine the wiring and decrease the effects of electrical interference as specified by these manuals: • MECHATROLINK-II Installation Guide (MECHATROLINK Members Association, manual number MMATDEP011) • MECHATROLINK-III Installation Manual (MECHATROLINK Members Association, publication number MMATDEP018)
Note: • If the drive detects this error, the terminal set to *H2-01 to H2-03 = 4 [MFDO Function Select = Alarm]* will activate. • If the drive detects this error, it will operate the motor as specified by the stopping method set in *F6-25 [MLII Watchdog Error Sel]*.			
Code	**Name**	**Causes**	**Possible Solutions**
EF	FWD/REV Run Command Input Error	A forward command and a reverse command were input at the same time for longer than 0.5 s.	Examine the forward and reverse command sequence and correct the problem.
Note: • If the drive detects *EF*, the motor will ramp to stop. • If the drive detects this error, the terminal assigned to *H2-01 to H2-03 = 4 [MFDO Function Select = Alarm]* will be ON.			

Code	Name	Causes	Possible Solutions
EF0	Option Card External Fault	The communication option card received an external fault from the controller.	1. Find the device that caused the external fault and remove the caus. 2. Clear the external fault input from the controller.
		A programming error occurred on the controller side.	Examine the operation of the controller program.

Note:
• The drive detects this error if the alarm function on the external device side is operating.
• If the drive detects this error, the terminal set to *H2-01 to H2-03 = 4 [MFDO Function Select = Alarm]* will activate.
• If the drive detects this error, it will operate the motor as specified by the stopping method set in *F6-03 [Comm Ext Flt Select (EF0)]*.

Code	Name	Causes	Possible Solutions
EF1	External Fault (Terminal DI1)	MFDI terminal DI1 caused an external fault through an external device.	1. Find the device that caused the external fault and remove the caus. 2. Clear the external fault input in the MFDI.
		The wiring is incorrect.	Correctly connect the signal line to MFDI terminal DI1.
		External Fault [H1-01 = 2C to 2F] is set to MFDI terminal DI1, but the terminal is not in use.	Correctly set the MFDI.

Note:
If the drive detects this error, the terminal set to *H2-01 to H2-03 = 4 [MFDO Function Select = Alarm]* will activate.

Code	Name	Causes	Possible Solutions
EF2	External Fault (Terminal DI2)	MFDI terminal DI2 caused an external fault through an external device.	1. Find the device that caused the external fault and remove the caus. 2. Clear the external fault input in the MFDI.
		The wiring is incorrect.	Correctly connect the signal line to MFDI terminal DI2.
		External Fault [H1-02 = 2C to 2F] is set to MFDI terminal DI2, but the terminal is not in use.	Correctly set the MFDI.

Note:
If the drive detects this error, the terminal set to *H2-01 to H2-03 = 4 [MFDO Function Selection = Alarm]* will activate.

Code	Name	Causes	Possible Solutions
EF3	External Fault (Terminal DI3)	MFDI terminal DI3 caused an external fault through an external device.	1. Find the device that caused the external fault and remove the caus. 2. Clear the external fault input in the MFDI.
		The wiring is incorrect.	Correctly connect the signal line to MFDI terminal DI3.
		External Fault [H1-03 = 2C to 2F] is set to MFDI terminal DI3, but the terminal is not in use.	Correctly set the MFDI.

Note:
If the drive detects this error, the terminal set to *H2-01 to H2-03 = 4 [MFDO Function Selection = Alarm]* will activate.

Code	Name	Causes	Possible Solutions
EF4	External Fault (Terminal DI4)	MFDI terminal DI4 caused an external fault through an external device.	1. Find the device that caused the external fault and remove the caus. 2. Clear the external fault input in the MFDI.
		The wiring is incorrect.	Correctly connect the signal line to MFDI terminal DI4.
		External Fault [H1-04 = 2C to 2F] is set to MFDI terminal DI4, but the terminal is not in use.	Correctly set the MFDI.

Note:
If the drive detects this error, the terminal set to *H2-01 to H2-03 = 4 [MFDO Function Selection = Alarm]* will activate.

Code	Name	Causes	Possible Solutions
EF5	External Fault (Terminal DI5)	MFDI terminal DI5 caused an external fault through an external device.	1. Find the device that caused the external fault and remove the caus. 2. Clear the external fault input in the MFDI.
		The wiring is incorrect.	Correctly connect the signal line to MFDI terminal DI5.
		External Fault [H1-05 = 2C to 2F] is set to MFDI terminal DI5, but the terminal is not in use.	Correctly set the MFDI.

Note:
If the drive detects this error, the terminal set to *H2-01 to H2-03 = 4 [MFDO Function Selection = Alarm]* will activate.

Code	Name	Causes	Possible Solutions
EF6	External Fault (Terminal DI6)	MFDI terminal DI6 caused an external fault through an external device.	1. Find the device that caused the external fault and remove the caus. 2. Clear the external fault input in the MFDI.
		The wiring is incorrect.	Correctly connect the signal line to MFDI terminal DI6.
		External Fault [H1-06 = 2C to 2F] is set to MFDI terminal DI6, but the terminal is not in use.	Correctly set the MFDI.

Note:
If the drive detects this error, the terminal set to *H2-01 to H2-03 = 4 [MFDO Function Selection = Alarm]* will activate.

Code	Name	Causes	Possible Solutions
EF7	External Fault (Terminal DI7)	MFDI terminal DI7 caused an external fault through an external device.	1. Find the device that caused the external fault and remove the caus. 2. Clear the external fault input in the MFDI.
		The wiring is incorrect.	Correctly connect the signal line to MFDI terminal DI7.
		External Fault [H1-07 = 2C to 2F] is set to MFDI terminal DI7, but the terminal is not in use.	Correctly set the MFDI.

Note:
If the drive detects this error, the terminal set to *H2-01 to H2-03 = 4 [MFDO Function Selection = Alarm]* will activate.

Code	Name	Causes	Possible Solutions
EP24v	External Power 24V Supply	The voltage of the main circuit power supply decreased, and the 24 V power supply is supplying power to the drive.	• Examine the main circuit power supply. • Turn ON the main circuit power supply to run the drive.

Note:
• Set *o2-26 [Ext24V Mode Warning Display]* to enable or disable *EP24v* detection.
• The drive will not output an alarm signal for this alarm.

Code	Name	Causes	Possible Solutions
FbH	Excessive PID Feedback	The *FbH* detection level is set incorrectly.	Adjust *b5-36 [PID HiHi Limit Level]* and *b5-37 [PID HiHi Time]*.
		There is a problem with the PID feedback wiring.	Correct errors with the PID control wiring.
		The feedback sensor is not operating correctly.	Examine the sensors on the control device side.
		A fault occurred in the feedback input circuit of the drive.	Replace the board or the drive. For information about replacing the control board, contact the manufacturer or your nearest sales representative.

Note:
• The drive detects this error if the PID feedback input is more than the level set in *b5-36* for longer than *b5-37*.
• If the drive detects this error, the terminal set to *H2-01 to H2-03 = 4 [MFDO Function Select = Alarm]* will activate.
• If the drive detects this error, it will operate the motor as specified by the stopping method set in *b5-12 [Fdback Loss Select Mode]*.

Code	Name	Causes	Possible Solutions
FbL	PID Feedback Loss	The *FbL* detection level is set incorrectly.	Adjust *b5-13 [Fdback Loss Lvl]* and *b5-14 [Fdback Loss Time]*.
		There is a problem with the PID feedback wiring.	Correct errors with the PID control wiring.
		The feedback sensor is not operating correctly.	Examine the sensors on the control device side.
		A fault occurred in the feedback input circuit of the drive.	Replace the board or the drive. For information about replacing the control board, contact the manufacturer or your nearest sales representative.

Note:
• The drive detects this error if the PID feedback input is lower than the level set in *b5-13* for longer than *b5-14*.
• If the drive detects this error, the terminal set to *H2-01 to H2-03 = 4 [MFDO Function Select = Alarm]* will activate.
• If the drive detects this error, it will operate the motor as specified by the stopping method set in *b5-12 [Fdback Loss Select Mode]*.

Code	Name	Causes	Possible Solutions
HCA	High Current Alarm	The load is too heavy.	• Decrease the load for applications with repetitive starts and stops. • Replace the drive with a larger capacity model.
		The acceleration time is too short.	• Calculate the torque necessary during acceleration related to the load inertia and the specified acceleration time. • Increase the values set in *C1-01, C1-03, C1-05, or C1-07 [Acceleration Times]* until you get the necessary torque. • Increase the values set in *C2-01 to C2-04 [S-Curve Characteristics]* until you get the necessary torque. • Replace the drive with a larger capacity model.
		The drive is trying to operate a specialized motor or a motor that is larger than the maximum applicable motor output of the drive.	• Examine the motor nameplate, the motor, and the drive to make sure that the drive rated current is larger than the motor rated current. • Replace the drive with a larger capacity model.
		The current level temporarily increased because of speed search after a momentary power loss or while trying to Auto Restart.	If speed search or Auto Restart cause an increase in current, the drive can temporarily show this alarm. The time that the drive shows the alarm is short. No more steps are necessary to clear the alarm.

Note:
• The drive detects this error if the drive output current is more than the overcurrent alarm level (150% of the rated current).
• If the drive detects this error, the terminal set to *H2-01 to H2-03 = 4 [MFDO Function Selection = Alarm]* will activate.

Code	Name	Causes	Possible Solutions
L24v	Loss of External Power 24V Supply	The voltage of the backup 24 V power supply has decreased. The main circuit power supply is operating correctly.	• Examine the external 24 V power supply for disconnected wires and wiring errors and repair the problems. • Examine the external 24 V power supply for problems.

Note:
• Set *o2-23 [Ext24V Off Warning Display]* to enable or disable *L24v* detection.
• The drive will not output an alarm signal for this alarm.

Code	Name	Causes	Possible Solutions
LoG	Log Com Error	There is not a micro SD in the keypad.	Put a micro SD card in the keypad.
		• The drive is connected to USB. • The number of log communication files is more than 1000. • The micro SD card does not have available memory space. • The line number data in a log communication file was changed. • A communication error between the keypad and drive occurred during a log communication.	Set *o5-01 = 0 [Log Start Selection = OFF]*.

Note:
If the drive detects this error, the terminal assigned to *H2-01 to H2-03 = 6A [MFDO Function Select = DataLog Error]* will be ON.

Code	Name	Causes	Possible Solutions
LT-1	Cooling Fan Maintenance Time	The cooling fan is at 90% of its expected performance life.	1. Use the procedures in this manual to replace the cooling fan. 2. Set *o4-03 = 0 [Fan.Oper Setting = 0 h]* to reset the cooling fan operation time.

Note:
When the estimated performance life is expired, the terminal assigned to *H2-01 to H2-03 = 63 [MFDO Function Select = Maintenance]* will be ON.

Code	Name	Causes	Possible Solutions
LT-2	Capacitor Maintenance Time	The capacitors for the main circuit and control circuit are at 90% of expected performance life.	Replace the board or the drive. For information about replacing the control board, contact the manufacturer or your nearest sales representative.

Note:
When the estimated performance life is expired, the terminal assigned to *H2-01 to H2-03 = 63 [MFDO Function Select = Maintenance]* will be ON.

Code	Name	Causes	Possible Solutions
LT-3	SoftChargeBypassRelay MainteTime	The soft charge bypass relay is at 90% of its expected performance life.	Replace the board or the drive. For information about replacing the control board, contact the manufacturer or your nearest sales representative.

Note:
When the estimated performance life is expired, the terminal assigned to *H2-01 to H2-03 = 63 [MFDO Function Select = Maintenance]* will be ON.

Code	Name	Causes	Possible Solutions
LT-4	IGBT Maintenance Time (50%)	The IGBT is at 50% of its expected performance life.	Check the load, carrier frequency, and output frequency.

Note:
When the estimated performance life is expired, the terminal assigned to *H2-01 to H2-03 = 63 [MFDO Function Select = Maintenance]* will be ON.

Code	Name	Causes	Possible Solutions
oH	Heatsink Overheat	The ambient temperature is high and the heatsink temperature is more than the *L8-02 [Overheat Alm Level]*.	• Measure the ambient temperature. • Increase the airflow around the drive. • Install a cooling device (cooling fan or air conditioner) to lower the ambient temperature. • Remove objects near the drive that are producing too much heat.
		There is not sufficient airflow around the drive.	• Give the drive the correct installation space as shown in the manual. • Make sure that there is sufficient circulation around the control panel. • Examine the drive for dust or other unwanted materials that could clog the cooling fan. • Remove unwanted materials that prevent air circulation.
		The internal cooling fan or fans have stopped.	1. Use the procedures in this manual to replace the cooling fan. 2. Set *o4-03 = 0 [Fan.Oper Setting = 0 h]*.

Note:
• The drive detects this error if the heatsink temperature of the drive is more than *L8-02*.
• If the drive detects this error, the terminal set to *H2-01 to H2-03 = 4 [MFDO Function Selection = Alarm]* will activate.
• If the drive detects this error, it will operate the motor as specified by the stopping method set in *L8-03 [Overheat Pre-Alarm Selection]*.

Code	Name	Causes	Possible Solutions
oH2	External Overheat (H1-XX=7D)	An external device sent an *oH2*.	1. Find the external device that output the overheat alarm. 2. Remove the cause of the problem. 3. Clear the *Overheat Alarm (oH2) [H1-xx = 7D]* set to MFDI terminals DI1 to DI7.

Note:
If the drive detects this error, the terminal set to *H2-01 to H2-03 = 4 [MFDO Function Selection = Alarm]* will activate.

Code	Name	Causes	Possible Solutions
oH3	Motor Overheat (PTC Input)	The thermistor wiring that detects motor temperature is defective.	Correct wiring errors.
		A fault occurred on the machine. Example: The machine is locked.	Examine the machine and remove the cause of the fault

Code	Name	Causes	Possible Solutions
		The motor has overheated.	• Check the load level, acceleration/deceleration time, and motor start/stop frequency (cycle time). • Decrease the load. • Increase the values set in *C1-01 to C1-08 [Acceleration/ Deceleration Times]*. • Set *E2-01 [Mot Rated Current (FLA)]* correctly to the value specified by the motor nameplate. • Make sure that the motor cooling system is operating correctly, and repair or replace it if it is damaged. • Adjust *E1-04 to E1-10 [V/f Pattern Parameters]*. For motor 2, adjust *E3-04 to E3-10*. Decrease the values set in *E1-08 [Mid A Voltage]* and *E1-10 [Min Output Voltage]*. **Note:** If the values set in *E1-08* and *E1-10* are too low, the overload tolerance will decrease at low speeds.
Note: • The drive detects this fault if the motor overheat signal input from analog input terminal AI1 or AI2 is more than the fault detection level. • If the drive detects this error, the terminal set to *H2-01 to H2-03 = 4 [MFDO Function Select = Alarm]* will activate. • If the drive detects this error, it will operate the motor as specified by the stopping method set in *L1-03 [Motor oH AL Reaction Select]*.			
Code	**Name**	**Causes**	**Possible Solutions**
oL3	Overtorque 1	A fault occurred on the machine. Example: The machine is locked.	Examine the machine and remove the cause of the fault
		The parameters are incorrect for the load.	Adjust *L6-02 [Trq Det1 Level]* and *L6-03 [Trq Det1 Time]*.
Note: • The drive detects this fault if the drive output current is more than the level set in *L6-02* for longer than *L6-03*. • If the drive detects this error, the terminal set to *H2-01 to H2-03 = 4 [MFDO Function Select = Alarm]* will activate. • Set the conditions that trigger the minor fault using *L6-01 [Trq Det1 Select]*.			
Code	**Name**	**Causes**	**Possible Solutions**
oL4	Overtorque 2	A fault occurred on the machine. Example: The machine is locked.	Examine the machine and remove the cause of the fault
		The parameters are incorrect for the load.	Adjust *L6-05 [Trq Det2 Level]* and *L6-06 [Trq Det2 Time]*.
Note: • The drive detects this error if the drive output current is more than the level set in *L6-05* for longer than *L6-06*. • If the drive detects this error, the terminal set to *H2-01 to H2-03 = 4 [MFDO Function Select = Alarm]* will activate. • Set the conditions that trigger the minor fault using *L6-04 [Trq Det2 Select]*.			
Code	**Name**	**Causes**	**Possible Solutions**
oL5	Mechanical Weakening Detection 1	The drive detected overtorque as specified by the conditions for mechanical weakening detection set in *L6-08 [MechF Enable]*.	Do a deterioration diagnostic test on the machine side.
Note: • If the drive detects this error, the terminal set to *H2-01 to H2-03 = 4 [MFDO Function Select = Alarm]* will activate. • If the drive detects this error, it will operate the motor as specified by the Stopping Method set in *L6-08*.			
Code	**Name**	**Causes**	**Possible Solutions**
oS	Overspeed	There is overshoot.	• Decrease *C5-01 [ASR PGain 1]* and increase *C5-02 [ASR ITime 1]*. • Adjust the pulse train gain with *H6-02 to H6-05 [Pulse Train Input Setting Parameters]*.
		There is an incorrect number of PG pulses set in the drive.	Set *H6-02 [PI Frequency Scale]* to the pulse train frequency during 100% reference (maximum motor rotation speed).
		The *oS* detection level is set incorrectly.	Adjust *F1-08 [Overspeed Level]* and *F1-09 [Overspeed Delay Time]*.
Note: • The drive detects this error if the motor speed is more than the value set in *F1-08* for longer than *F1-09*. • If the drive detects this error, the terminal set to *H2-01 to H2-03 = 4 [MFDO Function Selection = Alarm]* will activate. • If the drive detects this error, it will operate the motor as specified by the stopping method set in *F1-03 [Overspeed Detection Selection]*.			
Code	**Name**	**Causes**	**Possible Solutions**
ov	Overvoltage	There are surge voltages in the input power supply.	Connect a DC reactor to the drive. **Note:** If you turn the phase advancing capacitors ON and OFF and use thyristor converters in the same power supply system, there can be surge voltages that irregularly increase the input voltage.
		The drive output cable or motor is shorted to ground (the current short to ground is charging the main circuit capacitor of the drive through the power supply).	1. Examine the motor main circuit cable, terminals, and motor terminal box, and then remove ground faults. 2. Re-energize the drive.
		The power supply voltage is too high.	Decrease the power supply voltage to match the drive rated voltage.

Code	Name	Causes	Possible Solutions
		Electrical interference caused a drive malfunction.	• Examine the control circuit lines, main circuit lines, and ground wiring, and decrease the effects of electrical interference. • Make sure that a magnetic contactor is not the source of the electrical interference, then use a Surge Protective Device if necessary. • Set *L5-01 ≠ 0 [Auto-Reset Attempts ≠ 0 times]*.

Note:
• The drive detects this error if the DC bus voltage is more than the *ov* detection level when the Run command has not been input (while the drive is stopped).
• The *ov* detection level is approximately 410 V with 200 V class drives. The detection level is approximately 820 V for 400 V class drives.
• If the drive detects this error, the terminal set to *H2-01 to H2-03 = 4 [MFDO Function Select = Alarm]* will activate.

Code	Name	Causes	Possible Solutions
PASS	Modbus Communication Test	The Modbus communications test is complete.	The *PASS* display will turn off after communications test mode is cleared.

Code	Name	Causes	Possible Solutions
PF	Input Phase Loss	There is a phase loss in the drive input power.	Correct all wiring errors with the main circuit power supply.
		Loose wiring in the input power terminals.	Tighten the screws to the correct tightening torque.
		The drive input power voltage is changing too much.	• Examine the supply voltage for problems. • Make the drive input power stable.
		Unsatisfactory balance between voltage phases.	• Examine the supply voltage for problems. • Make the drive input power stable. • If the supply voltage is good, examine the magnetic contactor on the main circuit side for problems.
		The main circuit capacitors have become unserviceable.	• Examine the capacitor maintenance time in monitor *U4-05 [Capacitor Maintenance]*. • If *U4-05* is more than 90%, replace the capacitor. Contact the manufacturer or your nearest sales representative for more information.
			• Examine the supply voltage for problems. • Re-energize the drive. • If the alarm stays, replace the circuit board or the drive. For information about replacing the control board, contact the manufacturer or your nearest sales representative.

Note:
• The drive detects this error if the DC bus voltage changes irregularly without regeneration.
• If the drive detects this error, the terminal assigned to *H2-01 to H2-03 = 4 [MFDO Function Select = Alarm]* will be ON.
• Use *L8-05 [In PhaseLoss Selection]* to enable and disable *PF* detection.

Code	Name	Causes	Possible Solutions
PGo	Encoder (PG) Feedback Loss	The encoder cable is disconnected or wired incorrectly.	Examine for wiring errors or disconnected wires in the encoder cable, and repair problems.
		The encoder is not receiving power.	Examine the encoder power supply.
		The holding brake is stopping the motor.	Release the holding brake.

Note:
• The drive detects this error if it does not receive the speed detection pulse signal from the encoder in the detection time set in *F1-14 [Encoder Open-Circuit Detect Time]*.
• If the drive detects this error, the terminal assigned to *H2-01 to H2-03 = 4 [MFDO Function Select = Alarm]* will activate.
• If the drive detects this error, it will operate the motor as specified by the stopping method set in *F1-02 [PGOpen Detection Select]*.

Code	Name	Causes	Possible Solutions
rUn	Motor Switch during Run	The drive received a *Motor 2 Select [H1-xx = 61]* during run.	Make sure that the drive receives the Motor 2 Selection while the drive is stopped.

Note:
If the drive detects this error, the terminal set to *H2-01 to H2-03 = 4 [MFDO Function Select = Alarm]* will activate.

Code	Name	Causes	Possible Solutions
SE	Modbus Test Mode Error	Modbus communications self-diagnostics *[H1-xx = 7F]* was done while the drive was running.	Stop the drive and do Modbus communications self-diagnostics.

Note:
If the drive detects this error, the terminal set to *H2-01 to H2-03 = 4 [MFDO Function Select = Alarm]* will activate.

Code	Name	Causes	Possible Solutions
SToF	Safe Torque OFF Failure	One of the two terminals H1-HC and H2-HC received the Safe Disable input signal.	• Make sure that the Safe Disable signal is input from an external source to terminals H1-HC or H2-HC. • When the Safe Disable function is not in use, connect terminals H1-HC and H2-HC.
		The Safe Disable input signal is wired incorrectly.	
		There is internal damage to one Safe Disable channel.	Replace the board or the drive. For information about replacing the control board, contact the manufacturer or your nearest sales representative.

Note:
If the drive detects this error, the terminal assigned to *H2-01 to H2-03 = 4 [MFDO Function Select = Alarm]* will be ON.

Code	Name	Causes	Possible Solutions
TiM	Keypad Time Not Set	There is a battery in the keypad, but the date and time are not set.	Set the date and time with the keypad.

Note:
• Parameter *o4-24 [bAT Detection Selection]* enables and disables *TiM* detection.
• If the drive detects this error, the terminal set to *H2-01 to H2-03 = 4 [MFDO Function Select = Alarm]* will activate.

Code	Name	Causes	Possible Solutions
TrPC	IGBT Maintenance Time (90%)	The IGBT is at 90% of its expected performance life.	Replace the IGBT or the drive. For information about replacing the control board, contact the manufacturer or your nearest sales representative.

Note:
If the drive detects this error, the terminal set to *H2-01 to H2-03 = 4 [MFDO Function Selection = Alarm]* will activate.

Code	Name	Causes	Possible Solutions
UL3	Undertorque Detection 1	A fault occurred on the machine. Example: There is a broken pulley belt.	Examine the machine and remove the cause of the fault
		The parameters are incorrect for the load.	Adjust *L6-02 [Trq Det1 Level]* and *L6-03 [Trq Det1 Time]*.

Note:
• The drive detects this error if the drive output current is less than the level set in *L6-02* for longer than *L6-03*.
• If the drive detects this error, the terminal set to *H2-01 to H2-03 = 4 [MFDO Function Select = Alarm]* will activate.
• Set the conditions that trigger the minor fault using *L6-01 [Trq Det1 Select]*.

Code	Name	Causes	Possible Solutions
UL4	Undertorque Detection 2	A fault occurred on the machine. Example: There is a broken pulley belt.	Examine the machine and remove the cause of the fault
		The parameters are incorrect for the load.	Adjust *L6-05 [Trq Det2 Level]* and *L6-06 [Trq Det2 Time]*.

Note:
• The drive detects this error if the drive output current is less than the level set in *L6-05* for longer than *L6-06*.
• If the drive detects this error, the terminal set to *H2-01 to H2-03 = 4 [MFDO Function Select = Alarm]* will activate.
• Set the conditions that trigger the minor fault using *L6-04 [Trq Det2 Select]*.

Code	Name	Causes	Possible Solutions
UL5	Mechanical Weakening Detection 2	The drive detected undertorque as specified by the conditions for mechanical weakening detection set in *L6-08 [MechF Enable]*.	Examine the machine for deterioration.

Note:
• If the drive detects this error, the terminal set to *H2-01 to H2-03 = 4 [MFDO Function Select = Alarm]* will activate.
• If the drive detects this error, it will operate the motor as specified by the Stopping Method set in *L6-08*.

Code	Name	Causes	Possible Solutions
Uv	DC Bus Undervoltage	The drive input power voltage is changing too much.	• Use a better power supply voltage to align with the drive rated voltage. • Make the drive input power stable. • If there is not a fault with the input power supply, examine the magnetic contactor on the main circuit side for faults.
		A phase loss occurred in the drive input power.	Correct errors with the wiring for main circuit drive input power.
		There is loose wiring in the drive input power terminals.	Examine for loose screws and tighten them as specified by the tightening torque values in the manual.
		There was a loss of power.	Use a better power supply.
		The main circuit capacitors have deteriorated.	Examine the capacitor maintenance time in monitor *U4-05 [Capacitor Maintenance]*. If *U4-05* is more than 90%, replace the control board or the drive. For information about replacing the control board, contact the manufacturer or your nearest sales representative.
		The drive input power transformer is too small and voltage drops when the power is switched on.	• Check for an alarm when a molded-case circuit breaker, Leakage Breaker (ELCB, GFCI, or RCM/RCD) (with overcurrent protective function), or magnetic contactor is ON. • Check the capacity of the drive power supply transformer.
		Air inside the drive is too hot.	Measure the ambient temperature of the drive.
		The Charge LED is broken.	Replace the board or the drive. For information about replacing the control board, contact the manufacturer or your nearest sales representative.

Note:
• The drive detects this error if one of these conditions is correct when the Run command has not been input (while the drive is stopped).
  – The DC bus voltage < *L2-05 [UV Detection Lvl (Uv1)]*.
  – The Contactor that prevents inrush current in the drive was opened.
  – There is low voltage in the control drive input power.
• If the drive detects this error, the terminal set to *H2-01 to H2-03 = 4 [MFDO Function Select = Alarm]* will activate.

7.6 Parameter Setting Errors

Parameter setting errors occur when multiple parameter settings do not agree, or when parameter setting values are not correct.

Examine the parameter setting that caused the error, and remove the cause of the error. You must first correct the parameter setting errors before you can operate the drive. The drive will not send notification signals for the faults and alarms when these parameter setting errors occur.

Code	Name	Causes	Possible Solutions
oPE01	Drive Capacity Setting Error	The value set in *o2-04 [Drive KVA Selection]* does not agree with the drive model.	Set *o2-04* to the correct value.
Code	**Name**	**Causes**	**Possible Solutions**
oPE02	Parameter Range Setting Error	Parameters settings are not in the applicable setting range.	1. Push ↵ to show *U1-18 [oPE Fault Parameter]*, and find parameters that are not in the applicable setting range. 2. Correct the parameter settings. **Note:** If more than one error occurs at the same time, other *oPExx* errors have priority over *oPE02*.
		Set *E2-01 ≤ E2-03 [Mot Rated Current (FLA) ≤ Mot No-Load Current]*.	Make sure that *E2-01 > E2-03*. **Note:** If it is necessary to set *E2-01 < E2-03*, first lower the value set in *E2-03*, and then set *E2-01*.
Code	**Name**	**Causes**	**Possible Solutions**
oPE03	Multi-Function Input Setting Err	The settings for these parameters do not agree: • *H1-01 to H1-07 [Terminals DI1 to DI7 Function Selection]* • *H7-01 to H7-04 [Virtual Multi-Function Inputs 1 to 4]*	Correct the parameter settings.
		The settings for MFDIs overlap. **Note:** This does not include *H1-xx = 20 to 2F [MFDI Function Select = External Fault]* and *[Reserved]*.	Set the parameters correctly to prevent MFDI function overlap.
		These pairs of MFDI functions are not set to Digital Inputs (*H1-xx* and *H7-01 to H7-04*) at the same time: • Setting values *62 [Up Command]* and *63 [Down Command]* • Setting values *65 [Up2 Command]* and *66 [Dw2 Command]* • Setting values *3 [Run Command]* and *4 [FWD/REV Cmd]*	Set the MFDI pairs.
		A minimum of two of these MFDI combinations are set to Digital Inputs (*H1-xx* and *H7-01 to H7-04*) at the same time: • Setting values *62 [Up Command]* and *63 [Down Command]* • Setting values *65 [Up2 Command]* and *66 [Dw2 Command]* • Setting value *17 [Ac/Dec Hold]* • Setting value *16 [Ref Sample]* • Setting values *E to 10 [Add Offset Frequency 1 to 3 (d7-01 to d7-03)]*	Remove the function settings that are not in use.
		These commands are set in Digital Inputs (*H1-xx* and *H7-01 to H7-04*) at the same time: • Setting values *67 [SpdSrch Fmax]* and *68 [SpdSrch Fref]* • Setting values *40, 41, 42, 43 [KEB Thru1 NC, KEB Thru1 NO, KEB Thru2 NC, KEB Thru2 NO]* and *32 [HiSlipBraking]* • Setting values *61 [Motor 2 Select]* and *19 [Ac/Dec Time2]* • Setting values *40, 41 [KEB Thru1 NC, KEB Thru1 NO]* and *42, 43 [KEB Thru2 NC, KEB Thru2 NO]* • Setting values *1, 2 [Forward Run, Reverse Run]* and *3, 4 [Run Command, FWD/REV Cmd]* • Setting values *30 [DCInj Cmd]* and *1A [Drive Enable]* • Setting values *61 [Motor 2 Select]* and *65, 66 [Up2 Command, Dw2 Command]*	Remove the function settings that are not in use.

Code	Name	Causes	Possible Solutions
		Settings for N.C. and N.O. input *[H1-xx]* for these functions were selected at the same time: • Setting value *34 [Fast Stop NO]* • Setting value *35 [Fast Stop NC]*	Remove one of the function settings.
		These settings were entered while *H1-xx = 9 [Ext Ref 1/2]*: • *b1-15 = 4 [Freq. Ref. Sel. 2 = Pulse Train Input]* • *H6-01 ≠ 0 [PI Pulse Train Function ≠ Freq Ref]*	Set *H6-01 = 0*.
		These settings were entered while *H1-xx = 9 [Ext Ref 1/2]*: • *b1-15 = 3 [Option PCB]* or *b1-16 = 3 [Run Comm. Sel 2 = Option PCB]* • No option is connected to the drive.	Connect an input option to the drive.
		These settings were entered while *H1-xx = 9 [Ext Ref 1/2]*: • *b1-15 = 1 [Analog Input]* • *H3-02 ≠ 4 [AI1 Function Selection ≠ Freq Ref/ BIAS]* or *H3-10 ≠ 0 [AI2 Function Selection ≠ Freq Ref/BIAS]*	Set *H3-02 = 0* or *H3-10 = 0*.
		These parameters are set at the same time: • *H1-xx ≠ 1A [Drive Enable]* • *H2-xx = 2 [Drive Enable]*	Correct the parameter settings.
		These parameters are set at the same time: • *H6-01 ≠ 3 [PG Feedback]* • *H1-xx = 15 [FWD/REV Det]*	Correct the parameter settings.
		These parameters are set at the same time: • *H1-xx = 65/66 [Up2 Command / Dw2 Command]* • *H3-01, H3-09 = 1 [AI1 Signal Level Select, AI2 Signal Level Select = 0 to +10 V (Without Lower Limit)]*	Remove one of the function settings.
Code	**Name**	**Causes**	**Possible Solutions**
oPE05	Run Cmd/Freq Ref Source Sel Err	The setting to assign the Run command or frequency reference to an option card or the pulse train input is incorrect.	Correct the parameter settings.
		b1-01 = 3 [Freq. Ref. Sel. 1 = Option PCB] is set, but there is no option card connected to the drive.	Connect an option card to the drive.
		b1-02 = 3 [Run Comm. Sel 1 = Option PCB] is set, but there is no option card connected to the drive.	
		These parameters are set at the same time: • *b1-01 = 4 [Pulse Train Input]* • *H6-01 ≠ 0 [PI Pulse Train Function ≠ Freq Ref]*	Set *H6-01 = 0*.
Code	**Name**	**Causes**	**Possible Solutions**
oPE07	Analog Input Selection Error	The settings for *H3-02 and H3-10 [MFAI Function Select]* and *H7-30 [Virtual AIn Select Function]* overlap.	Set *H3-02, H3-10, and H7-30* correctly to prevent overlap. **Note:** It is possible to set these functions to multiple analog input terminals at the same time: • Setting value *4 [Freq Ref/BIAS]* • Setting values *0 [Through Mode]*
		These parameters are set at the same time: • *H3-02, H3-10, H7-30 = F [PID Fbk]* • *H6-01 = 1 [PI Pulse Train Function = PIDFbk Value]*	Remove the function settings that are not in use.
		These parameters are set at the same time: • *H3-02, H3-10, H7-30 = 10 [PID SetPoint]* • *H6-01 = 2 [PID SP Value]*	
		These parameters are set at the same time: • *H3-02, H3-10, H7-30 = 10* • *b5-18 = 1 [b5-19 PID SP Selection = Enabled]*	
		These parameters are set at the same time: • *H6-01 = 2* • *b5-18 = 1*	

Code	Name	Causes	Possible Solutions
oPE08	Parameter Selection Error	A function was set that is not compatible with the control method selected in *A1-02 [Control Method]*.	1. Push ENTER Key to show *U1-18 [oPE Fault Parameter]*, and find parameters that are not in the applicable setting range. 2. Correct the parameter settings. **Note:** If more than one error occurs at the same time, other *oPExx* errors have priority over *oPE02*.
		When *A1-02 = 2 [OLVector]*, you used these parameter settings: • *n2-02 > n2-03 [AFR Time 1 > AFR Time 2]* • *C4-02 > C4-06 [Trq Comp Delay Time > M2 Trq Comp Delay Time]*	• Set *n2-02 < n2-03*. • Set *C4-02 < C4-06*.
		When *A1-02 = 0 [V/f Control]*, you used these parameter settings: • H6-01 = 3 [PI Pulse Train Function = PG Feedback] • H1-xx = 61 [MFDI Function Select = Motor 2 Select]	Correct the parameter settings. **Note:** You cannot use Speed Feedback (V/F Control) with the Motor Switch function.
		When *A1-02 = 5 [PM OLVector]*, you set *E5-02 to E5-07 [PM q-Axis Inductance (mH/Phase)] = 0*.	• Set *E5-01 [PM Mot Code Selection]* correctly as specified by the motor. • For specialized motors, refer to the motor test report and set *E5-xx* correctly.
		When *A1-02 = 5, 6 [PM OLVector, PM AOLVector]*, you used these parameter settings: • *E5-09 = 0.0 [PM BackEMF Vpeak (mV/(rad/ s)) = 0.0 mV/(rad/s)]* • *E5-24 = 0.0 [PM BackEMF L-L Vrms (mV/rpm) = 0.0 mV/min^{-1}]*	Set *E5-09* or *E5-24* to the correct value.
		When *A1-02 = 5, 6*, you set *E5-09 ≠ 0* and *E5-24 ≠ 0*.	Set *E5-09 = 0* or *E5-24 = 0*.
		When *A1-02 = 6*, you set these parameters: • *n8-57 = 0 [High-Freq Injection = Disabled]* • You set *E1-09 [Min Output Frequency]* < the 5% value of *E1-06*.	Correct the parameter settings.
		When *A1-02 = 6*, you set these parameters: • *n8-35 = 1 [InitRotorPos Selection = Pull-In]* • *n8-57 = 1 [Enabled]*	Correct the parameter settings.
		When *A1-02 = 8 [EZ Vector]*, you used these parameter settings: • *E9-01 = 1, 2 [Motor Type Selection = PM, SynRM]* • *b3-24 = 2 [SpSrch Method Selection = Current Det2]*	When *E9-01 = 1 or 2, set b3-24 = 1 [Speed Estimation]*.
Code	**Name**	**Causes**	**Possible Solutions**
oPE09	PID Control Selection Fault	These parameters are set at the same time: • *b5-15 ≠ 0.0 [Sleep Start Level ≠ 0.0 Hz]* • *b1-03 = 2, 3 [Stopping Method Selection = DC Inj->Stop, Timed Coast->Stop]*	• Set *b5-15 ≠ 0.0*. • Set *b1-03 = 0, 1 [Ramp->Stop, Coast->Stop]*.
		These parameters are set at the same time: • *b5-01 = 1 [Enabled]* and *b5-72 = 0, 1 [PID D-FF Mode = D=Fdback, D=FdFwd]* • *d2-02 ≠ 0.0 [FRef Lower Limit ≠ 0.0%]*	Correct the parameter settings.
		These parameters are set at the same time: • *b5-01 = 1 and b5-72 = 0, 1 [D=Fdback, D= FdFwd]* • *b5-11 = 1 [PID Output Reverse Selection = Negative lower limit]*	Correct the parameter settings.
		These parameters are set at the same time: • *b5-01 = 1 and b5-70 = 1 [PID MainRefMode = Fref + PID] and B5-72 = 0, 1 [D=Fdback, D= FdFwd]* • *d2-02 ≠ 0.0* has been set.	Correct the parameter settings.
Note: The drive detects this error if the PID control function selection is incorrect. (When *b5-01 = 1 [PID Enable = Enabled]*)			

Code	Name	Causes	Possible Solutions
oPE10	V/f Data Setting Error	The parameters that set the V/f pattern do not satisfy these conditions: • For motor 1: *E1-09 ≤ E1-07 < E1-06 ≤ E1-11 ≤ E1-04 [Min Output Frequency ≤ Mid A Frequency < Base Frequency ≤ Mid B Frequency ≤ Max Output Frequency]* • For motor 2: *E3-09 ≤ E3-07 < E3-06 ≤ E3-11 ≤ E3-04 [M2 Min Out Frequency ≤ M2 Mid A Frequency < M2 Base Frequency ≤ M2 Mid B Frequency ≤ M2 Max Out Frequency]*	Set the parameters correctly to satisfy the conditions.
Code	**Name**	**Causes**	**Possible Solutions**
oPE11	Carrier Frequency Setting Error	These parameters are set at the same time: • *C6-05 > 6 [Carrier Freq Proportional Gain > 6]* • *C6-04 > C6-03 [Carrier Lower Frequency Limit > Carrier Upper Frequency Limit]* **Note:** When *C6-05 < 7*, *C6-04* becomes disabled. The drive sets the carrier frequency to the value set to *C6-03*.	Set *C6-02 to C6-05* correctly.
		C6-02 to C6-05 settings are not in the applicable setting range.	
Code	**Name**	**Causes**	**Possible Solutions**
oPE13	Pulse Monitor Selection Error	*H6-06 = 101, 102, 105, or 116 [PO Mon.Selection = Frequency Reference, Output Frequency, Motor Speed, Output Frequency after Soft Starter]* has not been set when *H6-07 = 0 [PO Freq.Scaling = 0 Hz]*.	Set *H6-06* correctly.
Code	**Name**	**Causes**	**Possible Solutions**
oPE16	Energy Saving Constants Error	The Energy Saving parameters are not set in the applicable setting range.	Make sure that *E5-xx* is set correctly as specified by the motor nameplate data.
Code	**Name**	**Causes**	**Possible Solutions**
oPE33	Digital Output Selection Error	These two parameters are set at the same time: • *H2-60 ≠ 0 [NO,NC,CM 2nd Function ≠ Through Mode]* • *H2-01 = 1xx [NO,NC,CM FuncSelection = Inverse output of xx]*	Clear the *H2-01 to H2-03 = 1xx [Inverse output of xx]* settings. **Note:** If you use the function to output logical calculation results (*H2-60, H2-63, H2-66 ≠ 0*), you cannot set *H2-01 to H2-03 = 1xx*.
		These two parameters are set at the same time: • *H2-63 ≠ 0 [DO1 2nd Function ≠ Through Mode]* • *H2-02 = 1xx [DO1-O1C Func Selection = Inverse output of xx]*	
		These two parameters are set at the same time: • *H2-66 ≠ 0 [DO2 2nd Function ≠ Through Mode]* • *H2-03 = 1xx [DO2-O2C Func Selection = Inverse output of xx]*	
		These parameter pairs are set incorrectly: • *H2-21 [Compare1 Low Limit] > H2-22 [Compare1 Up Limit]* • *H2-27 [Compare2 Low Limit] > H2-28 [Compare2 Up Limit]*	• Set parameters *H2-21 ≤ H2-22*. • Set parameters *H2-27 ≤ H2-28*.

7.7 Auto-Tuning Errors

If the drive detects an Auto-Tuning error, the keypad will show the error and the motor will coast to stop.

The drive will not send notification signals for faults and alarms when Auto-Tuning errors occur.

Two types of Auto-Tuning errors are: *Endx* and *Erx*:

- *Endx* identifies that Auto-Tuning has successfully completed with calculation errors. Find and repair the cause of the error and do Auto-Tuning again, or set the motor parameters manually. You can use the drive in the application if you cannot find the cause of the *Endx* error.
- *Erx* identifies that Auto-Tuning was not successful. Find and repair the cause of the error and do Auto-Tuning again.

Code	Name	Causes	Possible Solutions
End1	Excessive Rated Voltage Setting	The torque reference was more than 20% during Auto-Tuning or the no-load current that was measured after Auto-Tuning is more than 80%.	• Make sure that the input motor nameplate data is correct. • Do Auto-Tuning again and correctly set the motor nameplate data. • If you can uncouple the motor and load, remove the motor from the machine and do Rotational Auto-Tuning again. • If you cannot uncouple the motor and load, use the results from Auto-Tuning.
Code	**Name**	**Causes**	**Possible Solutions**
End2	Iron Core Saturation Coefficient	The motor nameplate data entered during Auto-Tuning is incorrect.	• Make sure that the input motor nameplate data is correct. • Do Auto-Tuning again and correctly set the motor nameplate data.
		Auto-Tuning results were not in the applicable parameter setting range, and *E2-07* or *E2-08 [Mbus Reg1 Bit Select]* have temporary values.	• Examine and repair damaged motor wiring. • If you can uncouple the motor and load, remove the motor from the machine and do Rotational Auto-Tuning again.
Code	**Name**	**Causes**	**Possible Solutions**
End3	Rated Current Setting Alarm	The rated current value is incorrect.	Do Auto-Tuning again and set the correct rated current shown on the motor nameplate.
Code	**Name**	**Causes**	**Possible Solutions**
End4	Adjusted Slip Calculation Error	The Auto-Tuning results were not in the applicable parameter setting range.	• Make sure the input motor nameplate data is correct. • Do Rotational Auto-Tuning again and correctly set the motor nameplate data. • If you cannot uncouple the motor and load, do Stationary Auto-Tuning 2.
		The motor rated slip that was measured after Stationary Auto-Tuning was 0.2 Hz or lower.	
		The motor rated slip that was measured after compensation with *E2-08 [Mbus Reg1 Bit Select]* is not in the applicable range.	
		The secondary resistor measurement results were not in the applicable range.	
Code	**Name**	**Causes**	**Possible Solutions**
End5	Resistance Tuning Error	The Auto-Tuning results of the Line-to-Line Resistance were not in the applicable range.	• Make sure that the input motor nameplate data is correct. • Examine and repair damaged motor wiring.
Code	**Name**	**Causes**	**Possible Solutions**
End6	Leakage Inductance Alarm	The Auto-Tuning results were not in the applicable parameter setting range.	Make sure that the input motor nameplate data is correct, and do Auto-Tuning again.
		A1-02 [Control Method] setting is not applicable.	• Examine the value set in *A1-02*. • Make sure that the input motor nameplate data is correct, and do Auto-Tuning again.
Code	**Name**	**Causes**	**Possible Solutions**
End7	No-Load Current Alarm	The Auto-Tuning results of the motor no-load current value were not in the applicable range.	Examine and repair damaged motor wiring.
		Auto-Tuning results were less than 5% of the motor rated current.	Make sure that the input motor nameplate data is correct, and do Auto-Tuning again.
Code	**Name**	**Causes**	**Possible Solutions**
End8	HFI Alarm	• Inductance saliency ratio (*E5-07*/*E5-06*) is too small. • The drive cannot find the *n8-36 [HFI Signal Frequency]* value.	• Set the correct value on the motor nameplate to *[E5: PM MOTOR SETTINGS]* or do rotational/stationary Auto-Tuning. • When it is necessary to set *n8-35 = 2 [InitRotorPos Selection = HiFreq Injection]* or *n8-57 = 1 [High-Freq Injection = Enabled]*, make sure that there is no unusual noise in the low speed range (10% or less) and that the motor does not rotate in reverse at start. **Note:** If the drive detects *End8*, it will automatically set *n8-35 =1 [Pull-In] and n8-57 = 0 [Disabled]*. Do not change the settings unless necessary.

Code	Name	Causes	Possible Solutions
End9	Initial Pole Detection Alarm	The drive cannot calculate the correct value for *n8-84 [Polarity Det Current]* during High Frequency Injection Tuning.	When *n8-35 = 2 [InitRotorPos Selection = HiFreq Injection]* or *n8-57 = 1 [High-Freq Injection = Enabled]*, make sure that the motor does not rotate in reverse at start. **Note:** If the drive detects *End9*, it will automatically set *n8-35 =1 [Pull-In]* and *n8-57 = 0 [Disabled]*. Do not change the settings unless necessary.
Code	**Name**	**Causes**	**Possible Solutions**
Er-01	Motor Data Error	The motor nameplate data entered during Auto-Tuning is incorrect.	• Make sure that the motor nameplate data is correct. • Do Auto-Tuning again and correctly set the motor nameplate data.
		The combination of the motor rated power and motor rated current do not match.	• Examine the combination of drive capacity and motor output. • Do Auto-Tuning again, and correctly set the motor rated power and motor rated current.
		The combination of the motor rated current that was entered during Auto-Tuning and *E2-03 [Mot No-Load Current]* do not match.	• Examine the motor rated current and the no-load current. • Set *E2-03* correctly. • Do Auto-Tuning again, and correctly set the motor rated current.
		The combination of the setting values of Motor Base Frequency and Motor Base Speed do not match.	Do Auto-Tuning again, and correctly set the Motor Base Frequency and Motor Base Speed.
Code	**Name**	**Causes**	**Possible Solutions**
Er-02	Drive in an Alarm State	The motor nameplate data entered during Auto-Tuning is incorrect.	• Make sure that the motor nameplate data entered in Auto-Tuning is correct. • Do Auto-Tuning again and correctly set the motor nameplate data.
		You did Auto-Tuning while the drive had a minor fault or alarm.	Clear the minor fault or alarm and do Auto-Tuning again.
		There is a defective motor cable or cable connection.	Examine and repair motor wiring.
		The load is too large.	• Decrease the load. • Examine the machine area to see if, for example, the motor shaft is locked.
		The drive detected a minor fault during Auto-Tuning.	1. Stop Auto-Tuning. 2. Examine the minor fault code and remove the cause of the prblem. 3. Do Auto-Tuning again.
Code	**Name**	**Causes**	**Possible Solutions**
Er-03	STOP Button was Pressed	During Auto-Tuning, STOP was pushed.	Auto-Tuning did not complete correctly. Do Auto-Tuning again.
Code	**Name**	**Causes**	**Possible Solutions**
Er-04	Line-to-Line Resistance Error	The Auto-Tuning results were not in the applicable parameter setting range.	• Examine and repair motor wiring. • Disconnect the machine from the motor and do Rotational Auto-Tuning again.
		Auto-Tuning did not complete in a pre-set length of time.	
		There is a defective motor cable or cable connection.	
		The motor nameplate data entered during Auto-Tuning is incorrect.	• Make sure that the input motor nameplate data is correct. • Do Auto-Tuning again and correctly set the motor nameplate data.
Code	**Name**	**Causes**	**Possible Solutions**
Er-05	No-Load Current Error	The Auto-Tuning results were not in the applicable parameter setting range.	• Examine and repair motor wiring. • Disconnect the machine from the motor and do Rotational Auto-Tuning again.
		Auto-Tuning did not complete in a pre-set length of time.	
		The motor nameplate data entered during Auto-Tuning is incorrect.	• Make sure that the input motor nameplate data is correct. • Do Auto-Tuning again and correctly set the motor nameplate data.
		Rotational Auto-Tuning was done with a load that was more than 30% of the rating connected to the motor.	• Disconnect the machine from the motor and do Rotational Auto-Tuning again. • If you cannot uncouple the motor and load, make sure that the load is less than 30% of the motor rating. If a mechanical brake is installed in the motor, release the brake during Rotational Auto-Tuning.

Code	Name	Causes	Possible Solutions
Er-08	Rated Slip Error	The motor nameplate data entered during Auto-Tuning is incorrect.	• Make sure that the input motor nameplate data is correct. • Do Auto-Tuning again and correctly set the motor nameplate data.
		Auto-Tuning did not complete in a pre-set length of time.	• Examine and repair the motor wiring. • If the motor and machine are connected during Rotational Auto-Tuning, decouple the motor from the machinery.
		The Auto-Tuning results were not in the applicable parameter setting range.	
		Rotational Auto-Tuning was done with a load that was more than 30% of the rating connected to the motor.	• Disconnect the machine from the motor and do Rotational Auto-Tuning again. • If you cannot uncouple the motor and load, make sure that the load is less than 30% of the motor rating. If a mechanical brake is installed in the motor, release the brake during Rotational Auto-Tuning.
Code	**Name**	**Causes**	**Possible Solutions**
Er-09	Acceleration Error	The motor did not accelerate for the specified acceleration time.	1. Increase the value set in *C1-01 [Accel Time 1]*. 2. Disconnect the machine from the motor and do Rotational Auto-Tuning again.
		The value of *L7-01 or L7-02 [FW Torque Limit or RV Torque Limit]* is small.	Increase the value set in *L7-01 or L7-02*.
		Rotational Auto-Tuning was done with a load that was more than 30% of the rating connected to the motor.	• Disconnect the machine from the motor and do Rotational Auto-Tuning again. • If you cannot uncouple the motor and load, make sure that the load is less than 30% of the motor rating. If a mechanical brake is installed in the motor, release the brake during Rotational Auto-Tuning.
Code	**Name**	**Causes**	**Possible Solutions**
Er-10	Motor Direction Error	There is defective drive and motor wiring.	Examine and repair motor wiring.
		There is defective drive and encoder wiring.	Examine and repair the wiring to the encoder.
		The machine pulled the motor to rotate in the opposite direction.	Disconnect the machine from the motor and do Rotational Auto-Tuning again.
		When the torque reference is 100% or higher, the sign of the speed reference was opposite of the detected speed.	
Code	**Name**	**Causes**	**Possible Solutions**
Er-11	Motor Speed Error	The torque reference during acceleration is too high (100%).	• Increase the value set in *C1-01 [Accel Time 1]*. • Disconnect the machine from the motor and do Rotational Auto-Tuning again.
Code	**Name**	**Causes**	**Possible Solutions**
Er-12	Current Detection Error	There is a phase loss in the drive input power. (U/T1, V/T2, W/T3)	Examine and repair motor wiring.
		The current exceeded the current rating of the drive.	• Check the motor wiring for any short circuits between the wires. • Check and turn ON any magnetic contactors used between motors. • Replace the control board or the drive. For information about replacing the control board, contact the manufacturer or your nearest sales representative.
		The output current is too low.	
		You tried Auto-Tuning without a motor connected to the drive.	Connect the motor and do Auto-Tuning.
		There was a current detection signal error.	Replace the control board or the drive. For information about replacing the control board, contact the manufacturer or your nearest sales representative.
Code	**Name**	**Causes**	**Possible Solutions**
Er-13	Leakage Inductance Alarm	The motor rated current value is incorrect.	Correctly set the rated current indicated on the motor nameplate and perform Auto-Tuning again.
		The drive could not complete tuning for leakage inductance in fewer than 300 seconds.	Examine and repair motor wiring.
Code	**Name**	**Causes**	**Possible Solutions**
Er-14	Motor Speed Error 2	The motor speed was more than two times the amplitude of speed reference during Inertia Tuning.	Decrease the value set in *C5-01 [ASR PGain 1]*.
Code	**Name**	**Causes**	**Possible Solutions**
Er-15	Torque Saturation Error	During Inertia Tuning, the output torque was more than the value set in *L7-01 to L7-04 [Torque Limit]*.	• Increase the value set in *L7-01 to L7-04 [Torque Limit]* as much as possible. • Decrease the values set for the frequency and amplitude of the test signals used when doing inertia tuning. First, decrease the test signal amplitude, and then do Inertia Tuning. If the error continues, decrease the test signal frequency and do Inertia Tuning again.

Code	Name	Causes	Possible Solutions
Er-16	Inertia ID Error	The inertia found by the drive was too small or too large during Inertia Tuning (10% or less, or 50000% or more).	• Decrease the values set for the frequency and amplitude of the test signals used when doing inertia tuning. First, decrease the test signal amplitude, and then do Inertia Tuning. If the error continues, decrease the test signal frequency and do Inertia Tuning again • Correctly set the motor inertia as specified by the motor, and do Inertia Tuning again.
Code	**Name**	**Causes**	**Possible Solutions**
Er-17	Reverse Prohibited Error	*b1-04 = 1 [Reverse Operation Selection = Disabled]* **Note:** You cannot do Inertia Tuning if the drive cannot rotate the motor in reverse.	1. Enable reverse in the target machine. 2. Set *b1-04 = 0 [Enabled]*. 3. Do Inertia Tuning again.
Code	**Name**	**Causes**	**Possible Solutions**
Er-18	Back EMF Error	The result of the induced voltage tuning was not in the applicable range.	1. Make sure that the input motor nameplate data is correct. 2. Do Auto-Tuning again and correctly set the motor nameplate data.
Code	**Name**	**Causes**	**Possible Solutions**
Er-19	PM Inductance Error	The Auto-Tuning results of the PM motor inductance were not in the applicable range.	1. Make sure that the input motor nameplate data is correct. 2. Do Auto-Tuning again and correctly set the motor nameplate data.
Code	**Name**	**Causes**	**Possible Solutions**
Er-20	Stator Resistance Error	The Auto-Tuning results of the PM Motor Stator Resistance were not in the applicable range.	1. Make sure that the input motor nameplate data is correct. 2. Do Auto-Tuning again and correctly set the motor nameplate data.
Code	**Name**	**Causes**	**Possible Solutions**
Er-25	HighFreq Inject Param Tuning Err	The motor data is incorrect.	Do Stationary Auto-Tuning again. **Note:** If the drive detects *Er-25* after doing Stationary Auto-Tuning, the motor may not be able to use high frequency injection control. Contact the manufacturer or your nearest sales representative for more information.

7.8 Backup Function Operating Mode Display and Errors

◆ Operating Mode Display

When you use the LCD keypad to do the backup function, the keypad shows the running operation on the LC display. These indicators do not show that an error has occurred.

Keypad Display	Name	Display	Status
Drive and Keypad mismatch. Should the parameters be restored?	Detection of inconsistency between the drive and keypad	Normally displayed	The drive detected the connection of a keypad from a different drive. Select [Yes] to copy parameters backed up in the keypad to the connected drive.
Restore Restore from keypad	Restoring parameters	Flashing	The parameters stored in the keypad have been restored to the drive.
End	Backup/restore/verify operation ended normally	Normally displayed	The parameter backup, restore, or verify operation ended normally.
Backup Backup from Drive	Backing up parameters	Flashing	The parameters stored in the drive are being backed up to the keypad.
Verify Keypad & Drive	Verifying parameters	Flashing	The parameter settings stored in the keypad and the parameter settings in the drive match or are being compared.

◆ Backup Function Error

When an error occurs, the keypad shows a code to identify the error.

Note:
Push any key on the keypad to clear an error.

Code	Name	Causes	Possible Solutions
CPEr	Control Mode Mismatch	The keypad setting and drive setting for *A1-02 [Control Method]* do not agree.	1. Set *A1-02* on the drive to the same value that is on the keypad. 2. Restore the parameters.
Code	**Name**	**Causes**	**Possible Solutions**
CPyE	Error Writing Data	Parameter restore did not end correctly.	Restore the parameters.
Code	**Name**	**Causes**	**Possible Solutions**
CSEr	Control Mode Mismatch	The keypad is broken.	Replace the keypad.
Code	**Name**	**Causes**	**Possible Solutions**
dFPS	Drive Model Mismatch	You tried to restore parameters to a different drive model than the one that you backed up.	1. Examine the drive model that you used to back up the parameters. 2. Restore the parameters.
Code	**Name**	**Causes**	**Possible Solutions**
iFEr	Keypad Communication Error	There was a communications error between the keypad and the drive.	Examine the connector or cable connection.
Code	**Name**	**Causes**	**Possible Solutions**
ndAT	Error Received Data	The parameter settings for model and specifications (power supply voltage and capacity) are different between the keypad and the drive.	1. Make sure that drive model and the value set in *o2-04 [Drive KVA Selection]* agree. 2. Restore the parameters.
		The parameters are not stored in the keypad.	1. Connect a keypad that has the correct parameters. 2. Restore the parameters.
Code	**Name**	**Causes**	**Possible Solutions**
PWEr	Q2pack Password Mismatch	The password set in the backup operation with *[q: Q2PACK PARAMETERS]* and *[r: Q2PACK JOINTS]* is incorrect.	Set the Q2pack PC software password supplied for the Q2pack program user ID downloaded to the drive.
Note: *U8-11 and U8-12 [Q2pack Ver 1 and Q2pack Ver 2]* show the user ID of the Q2pack program.			
Code	**Name**	**Causes**	**Possible Solutions**
rdEr	Error Reading Data	You tried to backup the data when *o3-02 = 0 [COPY Allow Selection = Disabled]*.	Set *o3-02 = 1 [Enabled]* and backup again.
Code	**Name**	**Causes**	**Possible Solutions**
vAEr	Voltage Class, Capacity Mismatch	The power supply specifications or drive capacity parameter settings are different between the keypad and the drive.	1. Make sure that drive model and the value set in *o2-04 [Drive KVA Selection]* agree. 2. Restore the parameters.

Code	Name	Causes	Possible Solutions
vFyE	Parameters do not Match	The parameters that are backed up in the keypad and the parameters in the drive are not the same.	1. Restore or backup the parameter again. 2. Verify the parameters.

7.9 Diagnosing and Resetting Faults

When a fault occurs and the drive stops, do the procedures in this section to remove the cause of the fault, then re-energize the drive.

◆ Fault Occurs Without Power Loss

WARNING! *Crush Hazard. Wear eye protection when you do work on the drive. If you do not use correct safety equipment, it can cause serious injury or death.*

WARNING! *Electrical Shock Hazard. After the drive blows a fuse or trips an RCM/RCD, do not immediately energize the drive or operate peripheral devices. Wait for the time specified on the warning label at a minimum and make sure that all indicators are OFF. Then check the wiring and peripheral device ratings to find the cause of the problem. If you do not know the cause of the problem, contact the manufacturer before you energize the drive or peripheral devices. If you do not fix the problem before you operate the drive or peripheral devices, it can cause serious injury or death.*

1. Supply power to the control circuit from the external 24 V input.
2. Examine the fault code shown on the keypad.
3. Use monitor parameters *[U2: FAULT]* to show the fault code and data about the operating status of the drive immediately before the fault occurred.
4. Use the information in the Troubleshooting tables to remove the fault.
5. Do a fault reset.

Note:

1. To find the faults that were triggered, check the fault history in *U2-02 [Previous Fault]*. To find information about drive status (such as frequency, current, and voltage) when the faults were triggered, check *U2-03 to U2-20*.
2. If the fault display stays after you re-energize the drive, remove the cause of the fault and reset.

◆ Fault Reset Procedure

If a fault occurs, you must remove the cause of the fault and re-energize the drive.

Table 7.3 Fault Reset Methods

Methods	Description
Method 1	While the keypad is showing the fault or alarm code, push RESET on the keypad.
Method 2	Switch ON the MFDI terminal set to *H1-xx = 7B [MFDI Function Select = Fault Reset]*. **Note:** The default setting for *H1-04 [DI4 Function Selection]* is *7B [Fault Reset]*. 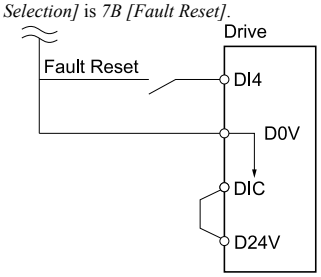
Method 3	1. De-energize the drive main circuit power supply. 2. Energize the drive again after the keypad display goes out. 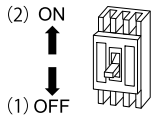

Note:

If the drive receives a Run command from a communication option or control circuit terminal, the drive will not reset the fault. Turn the Run command OFF to reset the fault. If you do a fault reset when the drive has a Run command, the keypad will show minor fault *CrST [Remove RUN Command to Reset]*.

7.10 Troubleshooting Without Fault Display

If the drive or motor operate incorrectly, but the keypad does not show a fault or error code, refer to the items this section.

- Motor hunting and oscillation
- Unsatisfactory motor torque
- Unsatisfactory speed precision
- Unsatisfactory motor torque and speed response
- Motor noise

◆ Typical Problems

Symptom	Reference
The Parameter Settings Will Not Change	258
The Motor Does Not Rotate After Entering Run Command	259
The Motor Rotates in the Opposite Direction from the Run Command	260
The Motor Rotates in Only One Direction	260
The Motor Is Too Hot	260
The Correct Auto-Tuning Mode Is Not Available	261
The Motor Stalls during Acceleration or Accel/Decel Time Is Too Long	261
The Drive Frequency Reference Is Different than the Controller Frequency Reference Command	262
The Motor Speed Is Not Stable When Using a PM Motor	262
There Is Too Much Motor Oscillation and the Rotation Is Irregular	262
Deceleration Takes Longer Than Expected When Dynamic Braking Is Enabled	262
The Load Falls When a Brake Is Applied	263
There Is Audible Noise from the Drive or Motor Cables When the Drive Is Energized	263
Residual Current Monitoring/Detection (RCM/RCD) Trips During Run	263
Motor Rotation Causes Unexpected Audible Noise from Connected Machinery	263
Motor Rotation Causes Oscillation or Hunting	263
PID Output Fault	264
The Starting Torque Is Not Sufficient	264
The Motor Rotates after the Drive Output Is Shut Off	264
The Output Frequency Is Lower Than the Frequency Reference	264
The Motor Is Making an Audible Noise	264
The Motor Will Not Restart after a Loss of Power	265

◆ The Parameter Settings Will Not Change

Causes	Possible Solutions
The drive is operating the motor (the drive is in Drive Mode).	Stop the drive and change to Programming Mode.
Parameter *A1-01 = 0 [Access Level = Monitor only]*.	Set *A1-01 = 2 [Access Level = Standard Parameters]* or *A1-01 = 3 [Expert Parameters]*.
Parameter *H1-xx = 7C [MFDI Function Select = Prg Lock]*.	Turn ON the terminals to which *H1-xx = 7C* is set, and then change the parameters.

Causes	Possible Solutions
An incorrect password was entered in *A1-04 [Password Input]*.	• Enter the correct password to *A1-04* again. • If you forgot the password, set the password again with *A1-04* and *A1-05 [Password Setting]*. **Note:** If the password is set, it will not be possible to change these parameters until the password matches: • *A1-01 [Access Level]* • *A1-02 [Control Method]* • *A1-03 [Init Parameters]* • *A1-06 [Macro Preset]* • *A1-07 [Q2pack Enable]* • *A2-01 to A2-32 [MAN1 Param1 to MAN3 Param12]*
The drive detected *Uv [Undervoltage]*.	• View *U1-07 [DC Bus Voltage]* to see the power supply voltage. • Examine the main circuit wiring.

◆ The Motor Does Not Rotate After Entering Run Command

Causes	Possible Solutions
The drive is not in Drive Mode.	1. Make sure that the READY LED on the keypad is on. 2. If the READY LED is off, push and hold the ESC Key to go back to the frequency reference screen (the initial screen).
The drive stopped and you pushed LO/RE to transfer the Run command source to the keypad.	Do one of these two: • Push LO/RE. • Re-energize the drive. **Note:** Set *o2-01 = 0 [LO/RE Key Selection of Function = Disabled]* to prevent changing the Run command source with LO/RE.
Auto-Tuning completed.	Push and hold the ESC Key to go back to the frequency reference screen (the initial screen). **Note:** When Auto-Tuning completes, the drive changes to Programming Mode. The drive will not accept a Run command unless the drive is in Drive Mode.
The drive received a Fast Stop command.	Turn off the fast stop input signal.
The settings for the source that supplies the Run command are incorrect.	Set *b1-02 [Run Comm. Sel 1]* correctly.
The frequency reference source is set incorrectly.	Set *b1-01 [Freq. Ref. Sel. 1]* correctly.
There is defective wiring in the control circuit terminals.	• Correctly wire the drive control circuit terminals. • View *U1-10 [In Terminal Status]* for input terminal status.
The settings for voltage input and current input of the master frequency reference are incorrect.	Examine these analog input terminal signal level settings: • Terminal AI1: *H3-01 [AI1 Signal Level Select]* • Terminal AI2: DIP switch S1 and *H3-09 [AI2 Signal Level Select]*
The selection for the sinking/sourcing mode and the internal/external power supply is incorrect.	• For sinking mode, close the circuit between terminals DIC-D24V with a wire jumper. • For sourcing mode, close the circuit between terminals DIC-D0V with a wire jumper. • For external power supply, remove the wire jumper.
The frequency reference is too low.	• View *U1-01 [Frequency Reference]*. • Increase the frequency reference to a value higher than *E1-09 [Min Output Frequency]*.
The MFAI setting is incorrect.	• Make sure that the functions set to the MFAI are correct. The frequency reference is 0 when *H3-02, H3-10 = 5 [MFAI Function Select = Freq Gain]* and voltage (current) is not input. • Use *U1-13, U1-14 [Terminal AI1 InputLv, Terminal AI2 InputLv]* to make sure that the analog input values set to terminals AI1 and AI2 are applicable.
You pushed STOP.	Turn the Run command OFF then ON from an external input. **Note:** When you push STOP during operation, the drive will ramp to stop. Set *o2-02 = 0 [STOP Key Selection of Function = Disabled]* to disable the STOP function.
The 2-wire sequence and 3-wire sequence are set incorrectly.	• Set one of the parameters *H1-03 to H1-07 [DI3 Function Selection to DI7 Function Selection]* to *5 [3-Wire Seq.]* to enable the 3-wire sequence. • If a 2-wire sequence is necessary, make sure that *H1-03 to H1-07* ≠ *5*.

◆ The Motor Rotates in the Opposite Direction from the Run Command

Causes	Possible Solutions
The phase wiring between the drive and motor is incorrect.	• Examine the wiring between the drive and motor. • Connect drive output terminals U/T1, V/T2, and W/T3 in the correct sequence to agree with motor terminals U, V, and W. • Switch two motor cables U, V, and W to reverse motor direction.
The forward direction for the motor is set incorrectly.	• Connect drive output terminals U/T1, V/T2, and W/T3 in the correct sequence to agree with motor terminals U, V, and W. • Switch two motor cables U, V, and W to reverse motor direction. 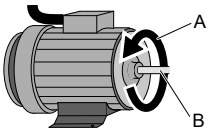 **A - Forward Rotation Direction** **B - Load Shaft** **Figure 7.1 Forward Rotating Motor** **Note:** • For Yaskawa motors, the forward direction is counterclockwise when looking from the motor shaft side. • Refer to the motor specifications, and make sure that the forward rotation direction is correct for the application. The forward rotation direction of motors can be different for different motor manufacturers and types.
The signal connections for forward run and reverse run on the drive control circuit terminals and control panel side are incorrect.	Correctly wire the control circuit.
The motor is running at almost 0 Hz and the Speed Search estimated the speed to be in the opposite direction.	Set *b3-14 = 0 [Speed Bi-Directional Search = Disabled]*, then the drive will only do speed search in the specified direction.

◆ The Motor Rotates in Only One Direction

Causes	Possible Solutions
The drive will not let the motor rotate in reverse.	Set *b1-04 = 0 [Reverse Operation Selection = Enabled]*.
The drive did not receive a Reverse run signal and 3-Wire sequence is selected.	Turn ON the terminals to which *H1-xx = 5 [3-Wire Seq.]* is set, and then enable reverse operation.

◆ The Motor Is Too Hot

Causes	Possible Solutions
The load is too heavy.	• Decrease the load. • Increase the acceleration and deceleration times. • Examine the values set in *L1-01 [Motor Cool Type for OL1 Calc]*, *L1-02 [OL1 Protect Time]*, and *E2-01 [Mot Rated Current (FLA)]*. • Use a larger motor. **Note:** The motor also has a short-term overload rating. Examine this rating carefully before setting drive parameters.
The motor is running continuously at a very low speed.	• Change the run speed. • Use a drive-dedicated motor.
The drive is operating in a vector control mode, but Auto-Tuning has not been done.	• Do Auto-Tuning. • Calculate motor parameter and set motor parameters. • Set *A1-02 = 0 [Control Method = V/f Control]*.
The voltage insulation between motor phases is not sufficient.	• Use a motor with a voltage tolerance that is higher than the maximum voltage surge. • Use a drive-dedicated motor that is rated for use with AC drives for applications that use a motor on drives rated higher than 400 V class. • Install an AC reactor on the output side of the drive and set *C6-02 = 1 [Carrier Frequency Selection = 2.0 kHz]*. **Note:** When the motor is connected to the drive output terminals U/T1, V/T2, and W/T3, surges occur between the drive switching and the motor coils. These surges can be three times the drive input power supply voltage (600 V for a 200 V class drive, 1200 V for a 400 V class drive).
The air around the motor is too hot.	• Measure the ambient temperature. • Decrease the temperature in the area until it is in the specified temperature range.
The motor fan stopped or is clogged.	• Clean the motor fan. • Make the drive environment better.

◆ The Correct Auto-Tuning Mode Is Not Available

Causes	Possible Solutions
The desired Auto-Tuning mode is not available for the selected control mode.	Change the motor control method with parameter *A1-02 [Control Method]*.

◆ The Motor Stalls during Acceleration or Accel/Decel Time Is Too Long

Causes	Possible Solutions
The drive and motor system are at the torque limit or current suppression will not let the drive accelerate.	• Decrease the load. • Use a larger motor. **Note:** Although the drive has a Stall Prevention function and a Torque Compensation Limit function, if you try to accelerate too fast or try to drive a load that is too large, it can be too much for the limits of the motor.
Torque limit is set incorrectly.	Set the torque limit correctly.
The acceleration time setting is too short.	Examine the values set in *C1-01, C1-03, C1-05, or C1-07 [Acceleration Time]* and set them to applicable values.
The load is too large.	• Increase the acceleration time. • Examine the mechanical brake and make sure that it is fully releasing. • Decrease the load to make sure that the output current stays less than the motor rated current. • Use a larger motor. **Note:** • In extruder and mixer applications, the load can increase as the temperature decreases. • Although the drive has a Stall Prevention function and a Torque Compensation Limit function, if you try to accelerate too fast or try to drive a load that is too large, it can be too much for the limits of the motor.
The frequency reference is low.	• Examine *E1-04 [Max Output Frequency]* and increase the setting if it is set too low. • Examine *U1-01 [Frequency Reference]* for the correct frequency reference. • Examine the multi-function input terminals to see if a frequency reference signal switch is set. • When you use an MFAI, examine the low gain level set in *H3-03, H3-11 [AI1 Gain Setting, AI2 Gain Setting]*.
The frequency reference is set incorrectly.	When *H3-10 = 5 [AI2 Function Selection = Freq Gain]*, see if the drive is set for voltage (current). • Examine the value set in *H3-10*. • Use *U1-14 [Terminal AI2 InputLv]* to make sure that the analog input value set to terminal AI2 is applicable.
The motor characteristics and drive parameter settings are not compatible.	• Set the correct V/f pattern to agree with the characteristics of the motor. • Examine the V/f pattern set in *E1-03 [V/f Pattern Selection]*. • Do Rotational Auto-Tuning.
The drive is operating in vector control mode, but you did not complete Auto-Tuning.	• Do Auto-Tuning. • Calculate motor data and reset motor parameters. • Set *A1-02 = 0 [Control Method = V/f Control]*.
The Stall Prevention level during acceleration setting is too low.	Increase the value set in *L3-02 [StallP Level@Accel]*. **Note:** If the *L3-02* value is too low, the acceleration time can be unsatisfactorily long.
The Stall Prevention level during run setting is too low.	Increase the value set in *L3-06 [StallP Level@Run]*. **Note:** If the *L3-06* value is too low, speed will decrease before the drive outputs torque.
The drive is at the limit of the V/f motor control method.	• When the motor cable is longer than 50 m (164 ft), do Auto-Tuning for line-to-line resistance. • Set the V/f pattern to "High Starting Torque". • Use a Vector Control method. **Note:** V/f control method does not supply high torque at low speeds.

◆ The Drive Frequency Reference Is Different than the Controller Frequency Reference Command

Causes	Possible Solutions
The analog input gain and bias for the frequency reference input are set incorrectly.	Examine the gain and bias settings for the analog inputs that set the frequency reference. • Terminal AI1: *H3-03 [AI1 Gain Setting]*, *H3-04 [AI1 Bias Setting]* • Terminal AI2: *H3-11 [AI2 Gain Setting]*, *H3-12 [AI2 Bias Setting]*
The drive is receiving frequency bias signals from analog input terminals AI1 and AI2 and the sum of all signals makes the frequency reference.	• Examine parameters *H3-02, H3-10 [MFAI Function Select]*. If both of these parameters = *4 [Freq Ref/BIAS]*, change the settings. • Use *U1-13, U1-14 [Terminal AI1 InputLv, Terminal AI2 InputLv]* to make sure that the analog input values set to terminals AI1 and AI2 are applicable.
PID control is enabled.	If PID control is not necessary, set *b5-01 = 0 [PID Enable = Disabled]*. **Note:** When PID control is enabled, the drive adjusts the output frequency as specified by the target value. The drive will only accelerate to the maximum output frequency set in *E1-04 [Max Output Frequency]* while PID control is active.

◆ The Motor Speed Is Not Stable When Using a PM Motor

Causes	Possible Solutions
E5-01 [PM Mot Code Selection] is set incorrectly.	Refer to “Motor Performance Fine-Tuning” in the technical manual.
The drive is operating the motor at more than the specified speed control range.	Examine the speed control range and adjust the speed.
The motor is hunting.	Adjust these parameters to have the largest effect: • *n8-55 [Load Inertia]* • *n8-45 [SpdFbck Det.Gain]* • *C4-02 [Trq Comp Delay Time]*
Hunting occurs at start.	Increase the value set in *C2-01 [Jerk@Start of Accel]*.
Too much current is flowing through the drive.	Set *E5-01 [PM Mot Code Selection]* correctly as specified by the motor. For special-purpose motors, enter the correct value to *E5-xx* as specified by the motor test report.
Operation is not stable when *n8-57 = 1 [High-Freq Injection = Enabled]*.	• Do High Frequency Injection Auto-Tuning. • Decrease the value set in *n8-41 [HFI PoleDet Pgain]* in increments of 0.5. **Note:** Set *n8-41 > 0.0* for IPM motors.

◆ There Is Too Much Motor Oscillation and the Rotation Is Irregular

Causes	Possible Solutions
Unsatisfactory balance of motor phases.	• Make sure that the drive input power voltage supplies stable power. • Set *L8-05 = 0 [In PhaseLoss Selection = Disabled]*.
The motor is hunting.	• Set *n1-01 = 1 [HuntPrev Selection = Enabled]*. • Increase the value of *n2-01 [AFR Gain]* or *n2-02 [AFR Time 1]*.

◆ Deceleration Takes Longer Than Expected When Dynamic Braking Is Enabled

Causes	Possible Solutions
The stall prevention during deceleration setting is incorrect.	• Examine the setting for *L3-04 [StallP@Decel Enable]*. • When the drive has a dynamic braking option installed, set *L3-04 = 0 [Disabled]*. • If the drive detects *ov [Overvoltage]*, set *L3-04 = 1 [Enabled] and L3-50 = 2 [StallP@Decel Mode = Gen Purpose w/ DB Resistor]*.
The deceleration time setting is too long.	Set *C1-02, C1-04, C1-06, or C1-08 [Deceleration Times]* to applicable values.
The motor torque is not sufficient.	Use a larger motor. **Note:** If these items are correct, the demand on the motor is more than the motor capacity: • Parameter settings are correct. • The drive does not detect *ov [Overvoltage]*.

Causes	Possible Solutions

The drive and motor system reached the torque limit.	• Examine the values set in *L7-01 to L7-04 [Torque Limit]* and increase them if necessary.
	Note:
	If the torque limit is enabled, deceleration time can increase because the drive cannot output more torque than the limit.
	• If *H3-02, H3-10 = 9, B, C, D [MFAI Function Select = Torque Limit]*, examine the settings for the MFAIs.
	  • Examine the values set in *H3-02 and H3-10*.
	  • Use *U1-13, U1-14 [Terminal AI1 InputLv, Terminal AI2 InputLv]* to make sure that the analog input values set to terminals A1 and A2 are applicable.

The load is more than the internal torque limit as specified by the drive rated current.	Replace the drive with a larger capacity model.

◆ The Load Falls When a Brake Is Applied

Causes	Possible Solutions
The open/close timing of the brake is incorrect.	Refer to "Notes on Controlling the Brake when Using the Hoist Application Preset" in the technical manual and take appropriate measures.
The DC injection braking is not sufficient.	Increase the value set in *b2-02 [DCI Braking Current]*.

◆ There Is Audible Noise from the Drive or Motor Cables When the Drive Is Energized

Causes	Possible Solutions
The relay switching in the drive is making too much noise.	• Use *C6-02 [Carrier Frequency Selection]* to decrease the carrier frequency. • Connect a noise filter to the input side of the drive power supply. • Connect a noise filter to the output side of the drive. • Isolate the control circuit wiring from the main circuit wiring. • Use a metal cable gland to wire the drive. • Shield the periphery of the drive with metal. • Make sure that the drive and motor are grounded correctly. • Make sure that ground faults have not occurred in the wiring or motor.

◆ Residual Current Monitoring/Detection (RCM/RCD) Trips During Run

Causes	Possible Solutions
There is too much leakage current from the drive.	• Increase the RCM/RCD sensitivity or use RCM/RCD with a higher threshold. • Use *C6-02 [Carrier Frequency Selection]* to decrease the carrier frequency. • Decrease the length of the cable used between the drive and the motor. • Install a noise filter or AC reactor on the output side of the drive. Set *C6-02 = 1 [2.0 kHz]* when connecting an AC reactor. • Disable the internal EMC filter.

◆ Motor Rotation Causes Unexpected Audible Noise from Connected Machinery

Causes	Possible Solutions
The carrier frequency and the resonant frequency of the connected machinery are the same.	• Adjust *C6-02 to C6-05 [Carrier Frequency]*. • Set *C6-02 = 1 to 6 [Carrier Frequency Selection = Frequency other than Swing PWM]*. **Note:** If *C6-02 = 7 to A [Carrier Frequency Selection = Swing PWM]*, the drive will not know if the noise comes from the drive or the machine.
The drive output frequency and the resonant frequency of the connected machinery are the same.	• Adjust *d3-01 to d3-04 [Jump Frequency 1 to Jump Frequency Width]*. • Put the motor on a rubber pad to decrease vibration.

◆ Motor Rotation Causes Oscillation or Hunting

Causes	Possible Solutions
The frequency reference is assigned to an external source, and there is electrical interference in the signal.	Make sure that electrical interference does not have an effect on the signal lines. • Isolate control circuit wiring from main circuit wiring. • Use twisted-pair cables or shielded wiring for the control circuit. • Increase the value of *H3-13 [An.In FilterTime Constant]*.
The cable between the drive and motor is too long.	• Do Auto-Tuning. • Make the wiring as short as possible.
The PID parameters are not sufficiently adjusted.	Adjust *[b5: PID CONTROL]*.

◆ PID Output Fault

Causes	Possible Solutions
There is no PID feedback input.	• Examine the MFAI terminal settings. • Make sure that *H3-02, H3-10 = F [MFAI Function Select = PID Fbk]*. • Make sure that the MFAI terminal settings agree with the signal inputs. • Examine the connection of the feedback signal. • Make sure that *[b5: PID CONTROL]* is set correctly. **Note:** If there is no PID feedback input to the terminal, the detected value is 0, which causes a PID fault and also causes the drive to operate at maximum frequency.
The detection level and the target value do not agree.	Use *H3-03, H3-11 [AI1 Gain Setting, AI2 Gain Setting]* to adjust PID target and feedback signal scaling. **Note:** PID control keeps the difference between the target value and detection value at 0. Set the input level for the values relative to each other.
Reverse drive output frequency and speed detection. When output frequency increases, the sensor detects a speed decrease.	Set *b5-09 = 1 [PID Output Level Selection = Reverse output]*.

◆ The Starting Torque Is Not Sufficient

Causes	Possible Solutions
Auto-Tuning has not been done in vector control method.	Do Auto-Tuning.
The control method was changed after doing Auto-Tuning.	Do Auto-Tuning again.
Stationary Auto-Tuning for Line-to-Line Resistance was done.	Do Rotational Auto-Tuning.

◆ The Motor Rotates after the Drive Output Is Shut Off

Causes	Possible Solutions
DC Injection Braking is too low and the drive cannot decelerate correctly.	• Increase the value set in *b2-02 [DCI Braking Current]*. • Increase the value set in *b2-04 [DCInj Time@Stop]*.
The stopping method makes the drive coast to stop.	Set *b1-03 = 0 or 2 [Stopping Method Selection = Ramp->Stop, DC Inj->Stop]*.

◆ The Output Frequency Is Lower Than the Frequency Reference

Causes	Possible Solutions
The frequency reference is in the Jump frequency range.	Adjust *d3-01 to d3-03 [Jump Frequency 1 to Jump Frequency 3]* and *d3-04 [Jump Frequency Width]*. **Note:** Enabling the Jump frequency prevents the drive from outputting the frequencies specified in the Jump range.
The upper limit for the frequency reference has been exceeded.	Set *E1-04 [Max Output Frequency]* and *d2-01 [FRef Upper Limit]* to the best values for the application. **Note:** This calculation supplies the upper value for the output frequency: *E1-04* × *d2-01* / 100
A large load triggered Stall Prevention function during acceleration.	• Decrease the load. • Adjust *L3-02 [StallP Level@Accel]*.
L3-01 = 4 [StallP Mode@Accel = ILim Mode] has been set.	1. Check whether the V/f pattern and motor parameter settings are appropriate, and set them correctly. 2. If this does not solve the problem, and it is not necessary to limit the current level of stall during acceleration, adjust *L3-02*. 3. If this does not solve the problem, set *L3-01 = 2 [General Purpose]*.
The motor is rotating at this speed: *b2-01 [ZSpd/DCI Threshold]* ≤ Motor Speed < *E1-09 [Min Output Frequency]*	Set *E1-09* < *b2-01*.

◆ The Motor Is Making an Audible Noise

Causes	Possible Solutions
100% of the rated output current of the drive was exceeded while operating at low speeds.	If the sound is coming from the motor, set *L8-38 = 0 [Carrier Reduction Mode = Disabled]*.

◆ The Motor Will Not Restart after a Loss of Power

Causes	Possible Solutions
The drive did not receive a Run command after applying power.	• Examine the sequence and wiring that enters the Run command. • Set up a relay to make sure that the Run command stays enabled during a loss of power.
For applications that use 3-wire sequence, the momentary power loss continued for a long time, and the relay that keeps the Run command has been switched off.	Examine the wiring and circuitry for the relay that keeps the Run command enabled during the momentary power loss ride-thru time.

8

Periodic Inspection and Maintenance

This chapter gives information about how to examine and maintain drives in use, how to replace cooling fans and other parts, and how to store drives.

8.1 Safety Precautions 268
8.2 Inspection 270
8.3 Maintenance 272
8.4 Replace Cooling Fans 274
8.5 Replace the Drive 279
8.6 Storage Guidelines 283

8.1 Safety Precautions

⚠DANGER

Electrical Shock Hazard

Do not examine, connect, or disconnect wiring on an energized drive. Before servicing, disconnect all power to the equipment and wait for the time specified on the warning label at a minimum. The internal capacitor stays charged after the drive is de-energized. The charge indicator LED extinguishes when the DC bus voltage decreases below 50 Vdc. When all indicators are OFF, measure for dangerous voltages to make sure that the drive is safe.

If you do work on the drive when it is energized, it will cause serious injury or death from electrical shock. The drive has internal capacitors that stay charged after you de-energize the drive.

Disconnect all power to the drive and wait for the time specified on the warning label before you remove covers. Check the drive for dangerous voltages before servicing or repair work.

If you do work on the drive when it is energized and there is no cover over the electronic circuits, it will cause serious injury or death from electrical shock. The drive has internal capacitors that stay charged after you de-energize the drive.

⚠WARNING

Electrical Shock Hazard

The motor will run after you de-energize the drive. PM motors can generate induced voltage to the terminal of the motor after you de-energize the drive.

If you touch a motor that is moving or energized, it can cause serious injury or death.

Do not operate the drive when covers are missing. Replace covers and shields before you operate the drive. Use the drive only as specified by the instructions.

Some figures in this section include drives without covers or safety shields to more clearly show the inside of the drive. If covers or safety shields are missing from the drive, it can cause serous injury or death.

Always ground the motor-side grounding terminal.

If you do not ground the equipment correctly, it can cause serious injury or death if you touch the motor case.

Only let approved personnel install, wire, maintain, examine, replace parts, and repair the drive.

If personnel are not approved, it can cause serious injury or death.

Do not wear loose clothing or jewelry when you do work on the drive. Tighten loose clothing and remove all metal objects, for example watches or rings.

Loose clothing can catch on the drive and jewelry can conduct electricity and cause serious injury or death.

Fire Hazard

Tighten all terminal screws to the correct tightening torque.

Connections that are too loose or too tight can cause incorrect operation and damage to the drive. Incorrect connections can also cause death or serious injury from fire.

Do not use the main circuit power supply (Overvoltage Category III) at incorrect voltages. Operate the drive in the specification range of the input voltage on the drive nameplate.

Voltages that are higher than the permitted nameplate tolerance can cause damage to the drive.

Do not put flammable or combustible materials on top of the drive and do not install the drive near flammable or combustible materials. Attach the drive to metal or other noncombustible material.

Flammable and combustible materials can start a fire and cause serious injury or death.

⚠WARNING

Electrical Shock Hazard

Do not modify the drive body or drive circuitry.

Modifications to drive body and circuitry can cause serious injury or death, will cause damage to the drive, and will void the warranty. The manufacturer is not responsible for modifications of the product made by the user.

Sudden Movement Hazard

Make sure that you align the phase order for the drive and motor when you connect the motor to drive output terminals U/T1, V/T2, and W/T3.

If the phase order is incorrect, it can cause the motor to run in reverse. If the motor accidentally runs in reverse, it can cause serious injury or death.

⚠CAUTION

Burn Hazard

Do not touch a hot drive heatsink. De-energize the drive, wait for a minimum of 15 minutes, then make sure that the heatsink is cool before you replace the cooling fans.

If you touch a hot drive heatsink, it can burn you.

NOTICE

Obey correct electrostatic discharge (ESD) procedures when you touch the drive.

Incorrect ESD procedures can cause damage to the drive circuitry.

Use the instructions in this manual to replace the cooling fans. When you do maintenance on the fans, replace all the fans to increase product life.

If you install the fans incorrectly, it can cause damage to the drive.

Make sure that all connections are correct after you install the drive and connect peripheral devices.

Incorrect connections can cause damage to the drive.

The drive can fail if users frequently turn the drive ON and OFF with the MC on the power source side to Run and Stop the drive. Incorrect operation can decrease the service life of the relay contacts and electrolytic capacitors.

If you frequently use the magnetic contactor on the power source side to Run and Stop the drive, it can cause drive failure.

Do not operate a drive or connected equipment that has damaged or missing parts.

You can cause damage to the drive and connected equipment.

Note:

Do not use unshielded cable for control wiring. Use shielded, twisted-pair wires and ground the shield to the ground terminal of the drive. Unshielded wire can cause electrical interference and unsatisfactory system performance.

8.2 Inspection

Power electronics have limited life and can show changes in performance and deterioration of performance after years of use in usual conditions. To help prevent these problems, it is important to do preventive maintenance and regular inspection, and replace parts on the drive.

Drives contain different types of power electronics, for example power transistors, semiconductors, capacitors, resistors, fans, and relays. The electronics in the drive are necessary for correct motor control.

Follow the inspection lists in this chapter as a part of a regular maintenance program.

Note:

Examine the drive one time each year at a minimum.

The operating conditions, environmental conditions, and use conditions will have an effect on the examination frequency for connected equipment.

Examine the drive more frequently if you use the drive in bad conditions or in these conditions:

- High ambient temperatures
- Frequent starting and stopping
- Changes in the AC power supply or load
- Too much vibration or shock loading
- Dust, metal dust, salt, sulfuric acid, or chlorine atmospheres
- Unsatisfactory storage conditions.

◆ Recommended Daily Inspection

Examine the following items each day to make sure that the components do not wear out or fail. Make a copy of this checklist and put a check mark in the “Checked” column after each inspection.

Table 8.1 Daily Inspection Checklist

Inspection Area	Inspection Points	Corrective Action	Checked
Motor	Examine for unusual oscillation or noise coming from the motor.	• Check the load coupling. • Measure motor vibration. • Tighten all loose components.	
Cooling System	Examine for unusual heat from the drive or motor and visible discoloration.	• Check for a load that is too heavy. • Tighten loose screws. • Check for a dirty heatsink or motor. • Measure the ambient temperature.	
	Examine the cooling fans.	• Check for a clogged or dirty fan. • Use the performance life monitor to check for correct fan operation.	
Surrounding Environment	Make sure that the installation environment is applicable.	Remove the source of contamination or correct unsatisfactory environment.	
Load	Make sure that the drive output current is not more than the motor or drive rating for an extended period of time.	• Check for a load that is too heavy. • Check the correct motor parameter settings.	
Power Supply Voltage	Examine main power supply and control voltages.	• Correct the voltage or power supply to agree with nameplate specifications. • Verify all main circuit phases.	

◆ Recommended Periodic Inspection

The following tables give information about the recommended periodic inspections for AC drives. Examine the drive one time each year at a minimum. The operating conditions, environmental conditions, and use conditions will have an effect on the examination frequency for connected equipment. You must use your experience with the application to select the correct inspection frequency for each drive installation. Periodic inspections will help to prevent performance deterioration and product failure. Make a copy of this checklist and put a check mark in the “Checked” column after each inspection.

DANGER! *Electrical Shock Hazard. Do not examine, connect, or disconnect wiring on an energized drive. Before servicing, disconnect all power to the equipment and wait for the time specified on the warning label at a minimum. The internal capacitor stays charged after the drive is de-energized. The charge indicator LED extinguishes when the DC bus voltage decreases below 50 Vdc. When all indicators are OFF, measure for dangerous voltages to make sure that the drive is safe. If you do work on the drive when it is energized, it will cause serious injury or death from electrical shock. The drive has internal capacitors that stay charged after you de-energize the drive.*

Table 8.2 Main Circuit Periodic Inspection Checklist

Inspection Area	Inspection Points	Corrective Action	Checked
General	• Examine equipment for discoloration from too much heat or deterioration. • Examine for damaged parts.	• Replace damaged components as necessary. • The drive does not have many serviceable parts and it could be necessary to replace the drive.	
	Examine for dirt, unwanted particles, or dust on components.	• Examine enclosure door seal. • Use a vacuum cleaner to remove unwanted particles and dust without touching the components. • If you cannot remove unwanted particles and dust with a vacuum cleaner, replace the components.	
Conductors and Wiring	• Examine wiring and connections for discoloration or damage. Examine wiring and connections for discoloration from too much heat. • Examine wire insulation and shielding for discoloration and wear.	Repair or replace damaged wiring.	
Terminal Block	Examine terminals for stripped, damaged, or loose connections.	• Tighten loose screws. • Replace damaged screws.	
Electromagnetic Contactors and Relays	• Examine contactors and relays for too much noise during operation. • Examine coils for signs of too much heat, such as melted or broken insulation.	• Check coil voltage for overvoltage or undervoltage conditions. • Replace broken relays, contactors, or circuit boards that you can remove.	
Dynamic Braking Option	Examine the insulation for discoloration from too much heat.	If there is discoloration in the option, check to make sure that there is not damage to the wiring. A small quantity of discoloration is not a problem.	
Electrolytic Capacitor	• Examine for leaks, discoloration, or cracks. • Examine if the cap has come off, if there is swelling, or if there are leaks from broken sides.	The drive does not have many serviceable parts and it could be necessary to replace the drive.	
Diodes, IGBT (Power Transistor)	Examine for dust or other unwanted material collected on the surface.	Use a vacuum cleaner to remove unwanted particles and dust without touching the components.	

Table 8.3 Motor Periodic Inspection Checklist

Inspection Area	Inspection Points	Corrective Action	Checked
Operation Check	Check for increased vibration or unusual noise.	Stop the motor and contact approved maintenance personnel as necessary.	

Table 8.4 Control Circuit Periodic Inspection Checklist

Inspection Area	Inspection Points	Corrective Action	Checked
General	• Examine terminals for stripped, damaged, or loose connections. • Make sure that all terminals have been correctly tightened.	• Tighten loose screws. • Replace damaged screws or terminals. • If terminals are integral to a circuit board, it could be necessary to replace the control board or the drive.	
Circuit Boards	• Check for odor, discoloration, or rust. • Make sure that all connections are correctly fastened. • Make sure that the surface of the circuit board does not have dust or oil mist.	• Tighten loose connections. • Use a vacuum cleaner to remove unwanted particles and dust without touching the components. • If you cannot remove unwanted particles and dust with a vacuum cleaner, replace the components. • Do not use solvents to clean the board. • The drive does not have many serviceable parts and it could be necessary to replace the drive.	

Table 8.5 Cooling System Periodic Inspection Checklist

Inspection Area	Inspection Points	Corrective Action	Checked
Cooling fan	• Check for unusual oscillation or unusual noise. • Check for damaged or missing fan blades.	Clean or replace the fans as necessary.	
Heatsink	• Examine for dust or other unwanted material collected on the surface. • Examine for dirt.	Use a vacuum cleaner to remove unwanted particles and dust without touching the components.	
Air Duct	Examine air intake, exhaust openings and make sure that there are no unwanted materials on the surface.	Clear blockages and clean air duct as necessary.	

Table 8.6 Keypad Periodic Inspection Checklist

Inspection Area	Inspection Points	Corrective Action	Checked
General	• Make sure that the keypad shows the data correctly. • Examine for dust or other unwanted material that collected on components in the area.	• Clean the keypad. • If you have problems with the display or the keys, contact the manufacturer or your nearest sales representative.	

8.3 Maintenance

The drive Maintenance Monitors keep track of component wear and tell the user when the end of the estimated performance life is approaching. The Maintenance Monitors prevent the need to shut down the full system for unexpected problems. Users can set alarm notifications for the maintenance periods for these drive components:

- Cooling fan
- Electrolytic capacitor
- Soft charge bypass relay
- IGBT

Contact the manufacturer or your nearest sales representative for more information about part replacement.

◆ Replaceable Parts

You can replace these parts of the drive:

- Cooling fan

If there is a failure in the main circuit, replace the drive.

If the drive is in the warranty period, contact the manufacturer or your nearest sales representative before you replace parts. The manufacturer reserves the right to replace or repair the drive as specified by the applicable warranty policy.

DANGER! *Electrical Shock Hazard. Do not examine, connect, or disconnect wiring on an energized drive. Before servicing, disconnect all power to the equipment and wait for the time specified on the warning label at a minimum. The internal capacitor stays charged after the drive is de-energized. The charge indicator LED extinguishes when the DC bus voltage decreases below 50 Vdc. When all indicators are OFF, measure for dangerous voltages to make sure that the drive is safe. If you do work on the drive when it is energized, it will cause serious injury or death from electrical shock. The drive has internal capacitors that stay charged after you de-energize the drive.*

◆ Part Replacement Guidelines

When you replace these parts, make sure that you use original replacement parts for the applicable model and design revision number of your drive.

Table 8.7 Standard Replacement Period

Parts	Standard Replacement Period
Cooling fan	10 years
Electrolytic capacitor *1	10 years

*1 If there is damage to parts that you cannot repair or replace, replace the drive.

Note:

Performance life estimate is based on these use conditions. These conditions are provided for the purpose of replacing parts to maintain performance. Some parts may require more frequent replacement due to poor environments or rigorous use. Operating conditions for performance life estimate: Ambient temperature: Yearly average of 40 °C (IP20/UL Open Type), Load factor: 80%, Operating rate: 24 hours a day

◆ Monitors that Display the Lifespan of Drive Components

The drive keypad shows percentage values for the replacement parts to help you know when you must replace those components. Use the monitors in Table 8.8 to check replacement periods. When the monitor value is 100%, the component is at the end of its useful life and there is an increased risk of drive malfunction. The manufacturer recommends that you check the maintenance period regularly to make sure that you get the maximum performance life.

Table 8.8 Performance Life Monitors

Monitor No.	Parts	Description
U4-03	Cooling fan	Shows the total operation time of fans as 0 to 99999 hours. After this value is 99999, the drive automatically resets it to 0.
U4-04		Shows the total fan operation time as a percentage of the specified maintenance period.
U4-05	Electrolytic Capacitor	Shows the total capacitor usage time as a percentage of the specified maintenance period.
U4-06	Soft charge bypass relay	Shows the number of times the drive is energized as a percentage of the performance life of the inrush circuit.
U4-07	IGBT	Shows the percentage of the maintenance period for the IGBTs.

◆ Alarm Outputs for Maintenance Monitors

You can use *H2-xx [MFDO Function Select]* to send a message that tells you when a specified component is near the end of its performance life estimate. Set the applicable value to *H2-xx* as shown in Table 8.9 for your component.

When the specified component is near the end of its performance life estimate, the MFDO terminals set for *H2-xx = 63 [Maintenance]* will activate, and the keypad will show an alarm that identifies the component to replace.

Table 8.9 Maintenance Period Alarms

Display	Alarm Name	Cause	Possible Solutions	Digital Outputs (Setting Value in H2-xx)
LT-1	Cooling Fan Maintenance Time	The cooling fan is at 90% of its expected performance life.	Replace the cooling fan, then set *o4-03 = 0 [Fan.Oper Setting = 0 h]* to reset the cooling fan operation time.	63
LT-2	Capacitor Maintenance Time	The capacitors for the main circuit and control circuit are at 90% of expected performance life.	Replace the board or the drive. Contact the manufacturer or your nearest sales representative to replace the board.	
LT-3	SoftChargeBypassRelay MainteTime	The soft charge bypass relay is at 90% of its performance life estimate.	Replace the board or the drive. Contact the manufacturer or your nearest sales representative to replace the board.	
LT-4	IGBT Maintenance Time (50%)	The IGBT is at 50% of its expected performance life.	Check the load, carrier frequency, and output frequency.	
TrPC	IGBT Maintenance Time (90%)	The IGBT is at 90% of its expected performance life.	Replace the IGBT or the drive.	4

◆ Related Parameters

Replace the component, then set Maintenance Setting *o4-03, o4-05, o4-07, and o4-09 = 0* to reset the Maintenance Monitor. If these parameters are not reset after the corresponding parts have been replaced, the Maintenance Monitor function will continue to count down the performance life from the value that was reached with the old part. If the Maintenance Monitor is not reset, the drive will not have the correct value of the performance life for the new component.

Note:

The maintenance period changes for different operating environments.

Table 8.10 Maintenance Setting Parameters

No.	Name	Function
o4-03	Fan.Oper Setting	Sets the value from which to start the cumulative drive cooling fan operation time in 10-hour units. **Note:** When *o4-03 = 30* has been set, the drive will count the operation time for the cooling fan from 300 hours and *U4-03 [Fan Oper.Time]* will show *300 h*.
o4-05	Cap.Maint.Setting	Sets the value from which to start the count for the main circuit capacitor maintenance period as a percentage.
o4-07	PreChgRly Preset Maintenance Cnt	Sets as a percentage the value from which to start the count for the soft charge bypass relay maintenance time.
o4-09	IGBT Preset Maintenance Cnt	Sets the value from which to start the count for the IGBT maintenance period as a percentage.

8.4 Replace Cooling Fans

NOTICE: *Use the instructions in this manual to replace the cooling fans. When you do maintenance on the fans, replace all the fans to increase product life. If you install the fans incorrectly, it can cause damage to the drive.*

To replace a cooling fan, contact the manufacturer or your nearest sales representative.

◆ Replace the Cooling Fan

Table 8.11 Applicable Models

Model	Cooling Fans
2006 - 2021	1
2042 - 2082	2
B010, B012	1
4005 - 4012	1
4031 - 4060	2

DANGER! *Electrical Shock Hazard. Do not examine, connect, or disconnect wiring on an energized drive. Before servicing, disconnect all power to the equipment and wait for the time specified on the warning label at a minimum. The internal capacitor stays charged after the drive is de-energized. The charge indicator LED extinguishes when the DC bus voltage decreases below 50 Vdc. When all indicators are OFF, measure for dangerous voltages to make sure that the drive is safe. If you do work on the drive when it is energized, it will cause serious injury or death from electrical shock. The drive has internal capacitors that stay charged after you de-energize the drive.*

CAUTION! *Burn Hazard. Do not touch a hot drive heatsink. De-energize the drive, wait for a minimum of 15 minutes, then make sure that the heatsink is cool before you replace the cooling fans. If you touch a hot drive heatsink, it can burn you.*

NOTICE: *Use the instructions in this manual to replace the cooling fans. When you do maintenance on the fans, replace all the fans to increase product life. If you install the fans incorrectly, it can cause damage to the drive.*

■ Remove a Fan

1. To remove the fan finger guard from the drive, push the hooks on the left and right sides of it and pull up.

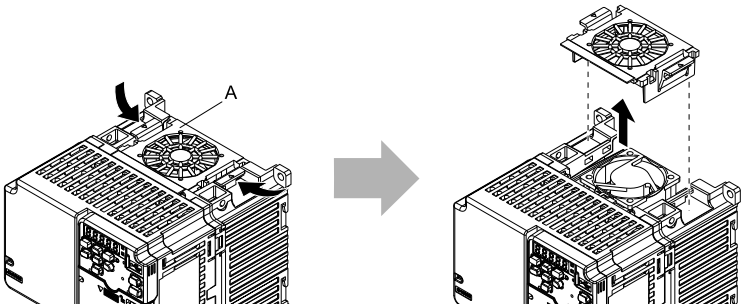

A - Fan finger guard

Figure 8.1 Remove the Fan Finger Guard

2. Pull the cooling fan straight up from the drive. Disconnect the power supply connector and remove the fan from the drive.

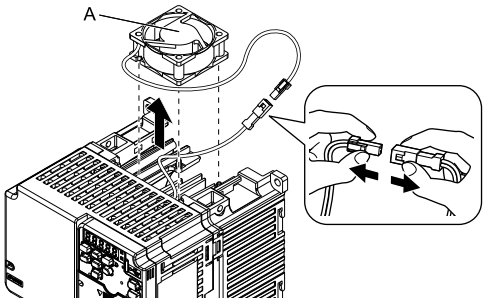

A - Cooling fan

Figure 8.2 Remove the Cooling Fan

■ Install a Fan

Reverse the removal procedure to install a cooling fan.

1. Connect the power supply connector between the drive and cooling fan.

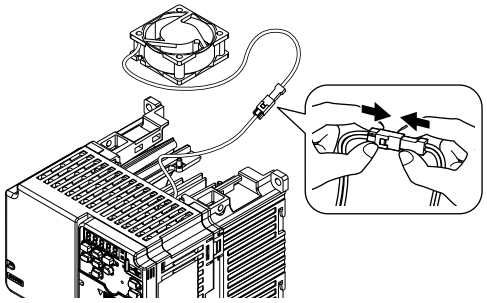

Figure 8.3 Connect the Power Supply Connector

2. Align the notches on the fan with the pins on the drive and install the cooling fans in the drive.

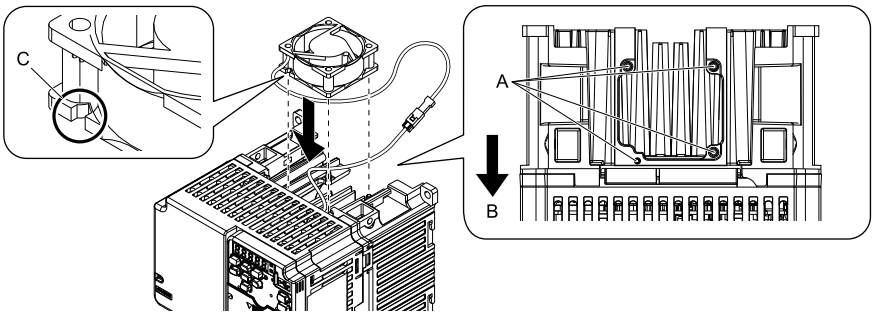

A - Alignment pins on drive
B - Front of drive
C - Notch on fan

Figure 8.4 Install the Cooling Fan

Note:
When you install the cooling fan, make sure that you do not pinch cables between the cooling fan and the drive.

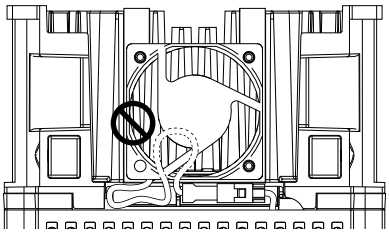

3. Put the cable and connector in the recess of the drive.

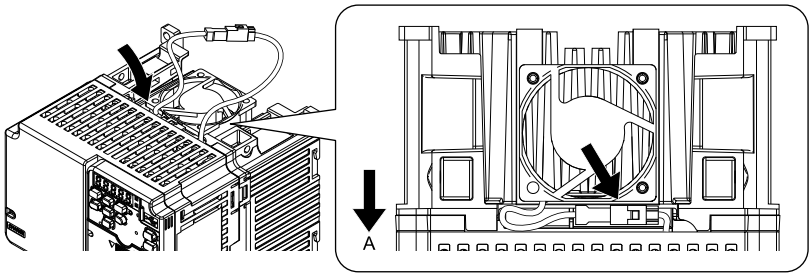

A - Front of drive

Figure 8.5 Put the Cable and Connector in the Drive Recess

Note:
The connector installation position is different for different models.

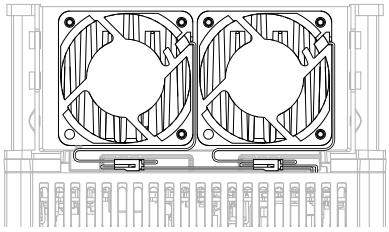

Figure 8.6 Put the Connector in the Recess

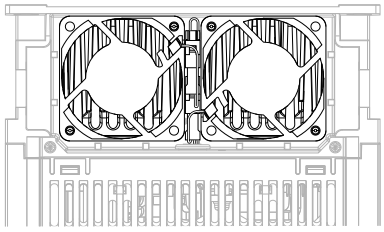

Figure 8.7 Put the Connector in Between the Fans

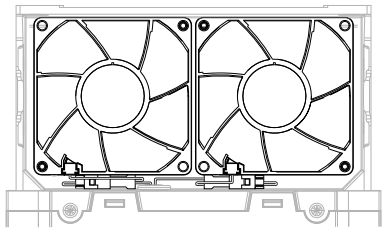

Figure 8.8 Put the Connector in Between the Drive and Fan

4. Insert the fan cover straight until the hook clicks into place.

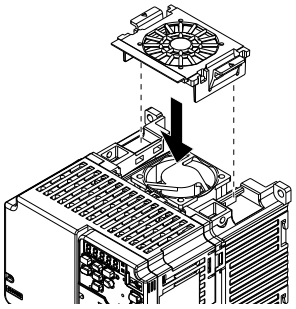

Figure 8.9 Reattach the Fan Finger Guard

5. Energize the drive and set *o4-03 = 0 [Fan.Oper Setting = 0 h]* to reset the cooling fan operation time.

◆ Replace the Cooling Fan

Table 8.12 Applicabel Models

Model	Cooling Fans
2030	1
B018	2
4018, 4023	1

DANGER! *Electrical Shock Hazard. Do not examine, connect, or disconnect wiring on an energized drive. Before servicing, disconnect all power to the equipment and wait for the time specified on the warning label at a minimum. The internal capacitor stays charged after the drive is de-energized. The charge indicator LED extinguishes when the DC bus voltage decreases below 50 Vdc. When all indicators are OFF, measure for dangerous voltages to make sure that the drive is safe. If you do work on the drive when it is energized, it will cause serious injury or death from electrical shock. The drive has internal capacitors that stay charged after you de-energize the drive.*

CAUTION! *Burn Hazard. Do not touch a hot drive heatsink. De-energize the drive, wait for a minimum of 15 minutes, then make sure that the heatsink is cool before you replace the cooling fans. If you touch a hot drive heatsink, it can burn you.*

NOTICE: *Use the instructions in this manual to replace the cooling fans. When you do maintenance on the fans, replace all the fans to increase product life. If you install the fans incorrectly, it can cause damage to the drive.*

■ Remove a Fan

1. Push the tabs toward the back of the drive and pull up to remove the fan finger guard from the drive.

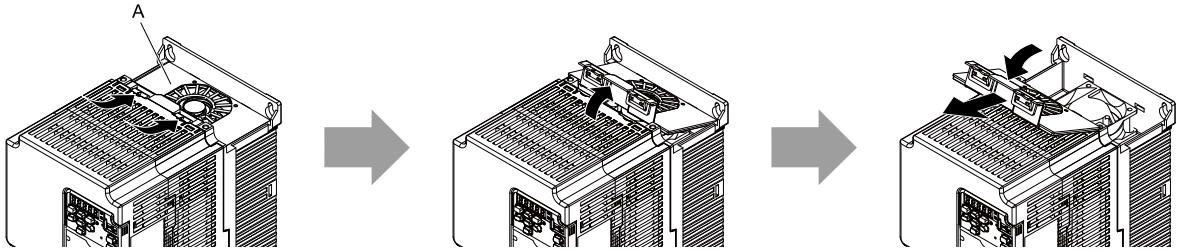

A - Fan finger guard

Figure 8.10 Remove the Fan Finger Guard

2. Pull the cooling fan straight up from the drive. Disconnect the power supply connector and remove the fan from the drive.

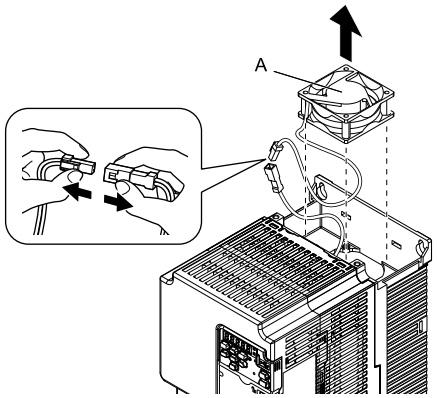

A - Cooling fan

Figure 8.11 Remove the Cooling Fan

■ Install the Cooling Fans

Reverse the removal procedure to install a cooling fan.

1. Connect the power supply connector between the drive and cooling fan.

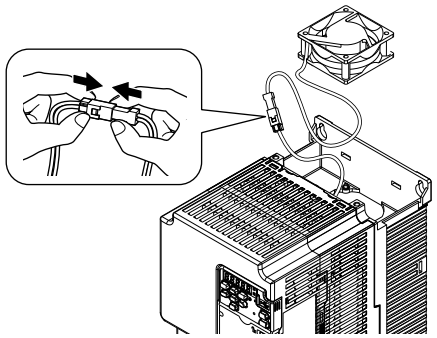

Figure 8.12 Connecting the power supply connector

2. Install the cooling fans so that they align with the pins on the drive.

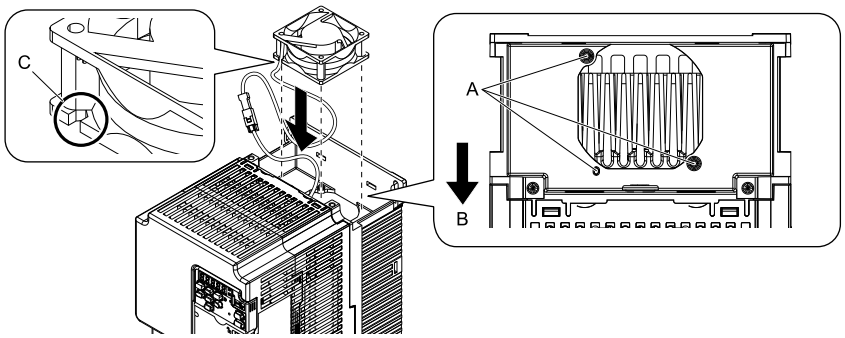

A - Alignment pins on drive
B - Front of drive
C - Notches

Figure 8.13 Installing the cooling fans

Note:
When you install the cooling fan, make sure that you do not pinch cables between the cooling fan and the drive.

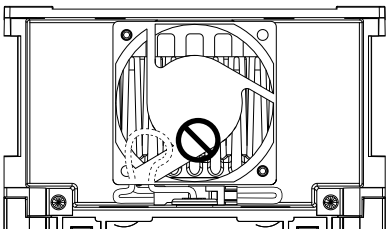

3. Put the cable and connector in the recess of the drive.

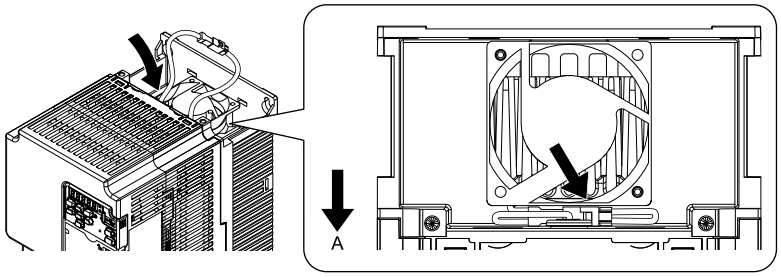

A - Front of drive

Figure 8.14 Putting the cable and connector in the recess

4. Insert the tabs of the fan cover into the holes in the drive and press in the fan cover until the hook clicks into place.

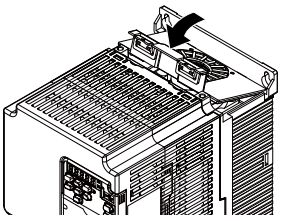

Figure 8.15 Reattach the Fan Finger Guard

5. Energize the drive and set *o4-03 = 0 [Fan.Oper Setting = 0 h]* to reset the cooling fan operation time.

8.5 Replace the Drive

◆ About the Control Circuit Board

You can remove the control circuit board of the drive and install a new board. If there is a failure in the drive, you can use this feature to easily replace the control circuit board.

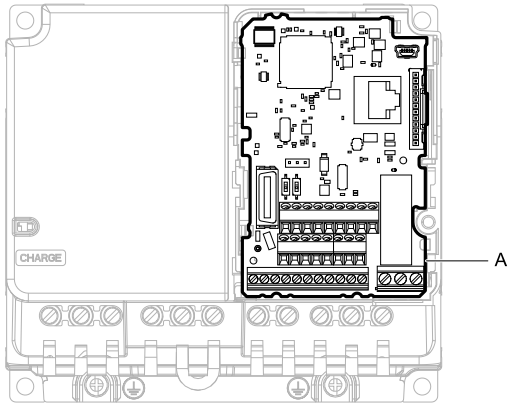

A - Control circuit board

Figure 8.16 Control Circuit Terminal Block

◆ Replace the Drive

DANGER! *Electrical Shock Hazard. Disconnect all power to the drive and wait for the time specified on the warning label before you remove covers. Check the drive for dangerous voltages before servicing or repair work. If you do work on the drive when it is energized and there is no cover over the electronic circuits, it will cause serious injury or death from electrical shock. The drive has internal capacitors that stay charged after you de-energize the drive.*

DANGER! *Electrical Shock Hazard. Do not examine, connect, or disconnect wiring on an energized drive. Before servicing, disconnect all power to the equipment and wait for the time specified on the warning label at a minimum. The internal capacitor stays charged after the drive is de-energized. The charge indicator LED extinguishes when the DC bus voltage decreases below 50 Vdc. When all indicators are OFF, measure for dangerous voltages to make sure that the drive is safe. If you do work on the drive when it is energized, it will cause serious injury or death from electrical shock. The drive has internal capacitors that stay charged after you de-energize the drive.*

WARNING! *Electrical Shock Hazard. Only let approved personnel install, wire, maintain, examine, replace parts, and repair the drive. If personnel are not approved, it can cause serious injury or death.*

NOTICE: *When you touch the drive and circuit boards, make sure that you observe correct electrostatic discharge (ESD) procedures. If you do not follow procedures, it can cause ESD damage to the drive circuitry.*

■ Notes on Wiring the Main Circuit Terminal Block

Read these notes before you wire the main circuit terminal block.

- Use UL-Listed, vinyl-coated insulated copper wires for operation with a continuous maximum permitted temperature of 75 °C at 600 V.
- Remove all unwanted objects that are near the terminal block connections.
- Remove the insulation from the connection wires to the wire stripping lengths shown in the manual.
- Do not use bent or crushed wires. Remove the damaged end of the wire before you use it. Incorrect connections can cause death or serious injury from fire.
- Do not solder stranded wire. Soldered wire connections can become loose over time and cause unsatisfactory drive performance.
- If you use stranded wire, make sure that all of the wire strands are in the connection. Also, do not twist the stranded wire too much. Incorrect connections can cause death or serious injury from fire.
- Put the wire all the way into the terminal block. Remove the insulation from the wire to the recommended wire stripping length to fit the wire with insulation in the plastic housing.
- Use a torque driver, torque ratchet, or torque wrench for the screws. A slotted driver or a hex tool will be necessary to wire the screw clamp terminal. Use applicable tools as specified by the recommended conditions in the product manual.
- If you use power tools to tighten the terminal screws, use a low speed setting (300 to 400 r/min). Failure to obey can cause damage to the terminal screws.
- Wire gauges on existing drive models to be replaced may not match wire gauge ranges on new drives. Refer to the drive manuals for correct wire sizes.

- Do not tighten the terminal screws at an angle of 5 degrees or more. Failure to obey can cause damage to the terminal screws.

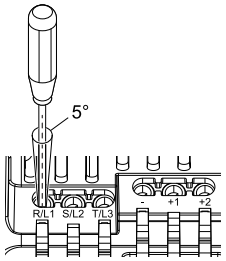

Figure 8.17 Permitted Angle

- Put the bit all the way into the hex socket to tighten the hex socket cap screw.
- When you tighten slotted screws, hold the straight-edge screwdriver perpendicularly to the screw. Make sure that you align the end of the straight-edge screwdriver with the screw groove.

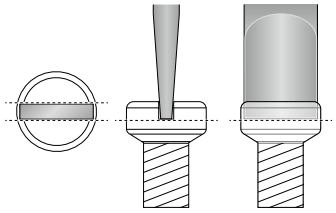

Figure 8.18 Tightening Slotted Screws

- After connecting the wires to the terminal block, lightly pull on the wires to make sure that they do not come out of the terminals.
- Do not let strain on the wiring cause damage. Use a strain relief near the wiring to release the tension. Refer to Figure 8.19 for an example.

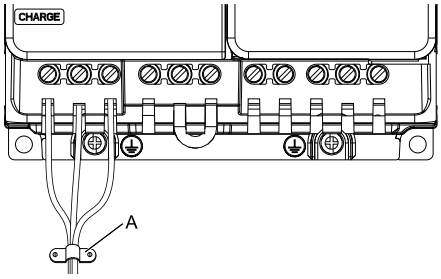

A - Cable clamp

Figure 8.19 Strain Relief Example

Table 8.13 Recommended Wiring Tools

Screw Size	Screw Shape	Wire Gauge	Adapter	Bit Model (Manufacturer)	Torque Driver Model (Tightening Torque)	Torque Wrench (Tightening Torque)
M3	⊖	-	Bit	SF-BIT-SL 0,5X3,0-70 (PHOENIX CONTACT)	TSD-M 1,2NM (0.3 - 1.2 N·m (2.7 - 10.6 in·lb))	-
M4	⊖	-	Bit	SF-BIT-SL 1,0X4,0-70 (PHOENIX CONTACT)	TSD-M 3NM (1.2 - 3.0 N·m (10.6 - 26.6 in·lb))	-
M5 *1	⊖	≤ 25 mm² (AWG 10)	Bit	SF-BIT-SL 1,2X6,5-70 (PHOENIX CONTACT)	TSD-M 3NM (1.2 - 3.0 N·m (10.6 - 26.6 in·lb))	-
		≥ 30 mm² (AWG 8)			-	4.1 - 4.5 N·m (36.3 - 39.8 in·lb) *2 *3
M6	⑤ (WAF: 5 mm)	-	Bit	SF-BIT-HEX 5-50 (PHOENIX CONTACT)	-	5 - 9 N·m (44.3 - 79.7 in·lb) *2 *3

*1 When you wire drive models 2042, 2056, 4031, 4038, 4044, and 4060, select the correct tools for the wire gauge.
*2 Use 6.35 mm (0.25 in) bit socket holder.
*3 Use a torque wrench that can apply this torque measurement range.

■ Remove the Control Circuit Board

Remove the front cover and keypad from the drive.

1. Push the tabs to the left that hold the control board to the drive.

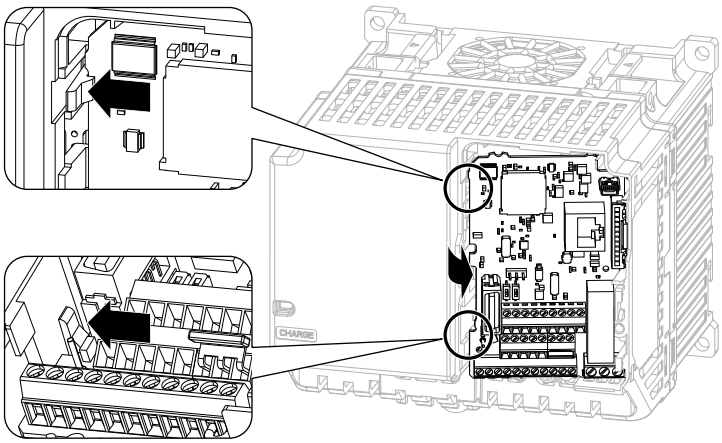

Figure 8.20 Unhook the Tabs

2. Pull the left side of the control circuit board out first.

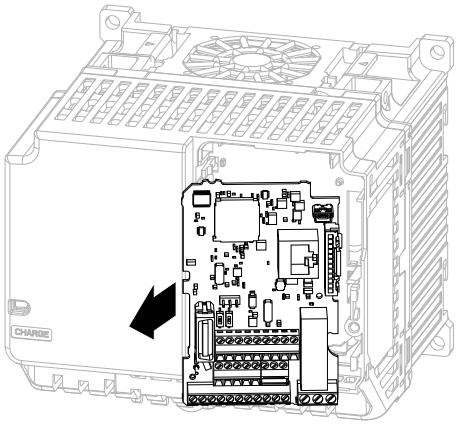

Figure 8.21 Remove the Control Circuit Board

■ Put the Control Circuit Board in a New Drive

Remove the keypad, front cover, and control circuit board of the new drive.
Wire the main circuit terminals of the new drive, then attach the wired control circuit board.

1. Wire the main circuit terminals.

Note:
To wire terminals +1 and +2, remove the jumper between terminals +1 and +2.

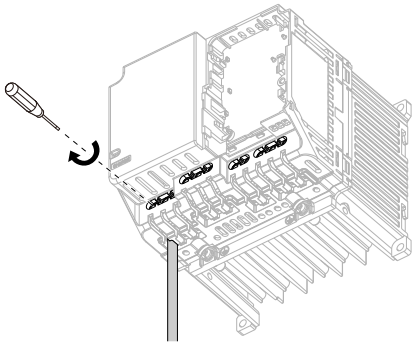

Figure 8.22 Wire the Main Circuit Terminals

2. Attach the wired control circuit board to the drive.
   Push the control circuit board until the hooks click into place on the drive.

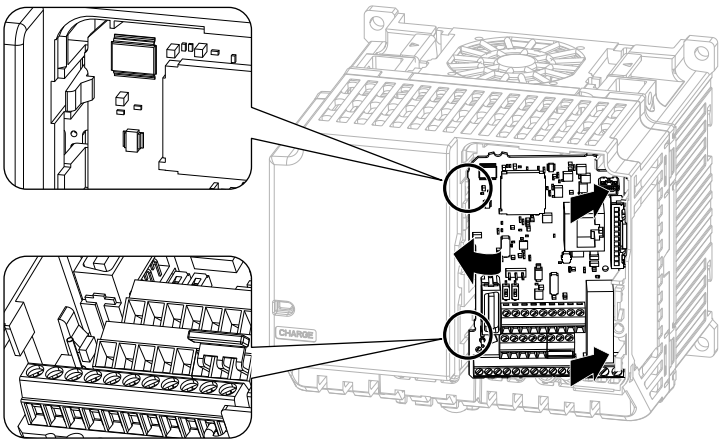

Figure 8.23 Attach the Control Circuit Board

3. Attach the keypad and front cover to the new drive.
4. Energize the drive and set these parameters:
   - *o2-04 [Drive KVA Selection]*: Set this parameter to the model number of the new drive.
   - *o4-01 to o4-13 [Maintenance Period]*: Reset the performance life monitors for the components.

8.6 Storage Guidelines

The chemicals in the electrolytic capacitors and other electronic parts of the drive change over time. When you store the drive for long periods of time, use the information in this section to help keep the performance life estimates.

◆ Storage Location

- Temperature and Humidity
  When you store the drive for approximately one month, for example during shipping, you can put the drive in a location where the temperature is -20 °C to +70 °C (-4 °F to +158 °F). Correctly package and store the drive during shipping to prevent vibration and impact damage.
  Do not put the drive in direct sunlight or where there will be condensation or ice. Put the drive in a location where the relative humidity is 95% or less.
- Dust and Oil Mist
  Do not keep the drive locations with dust or oil mist. For example, cement factories and cotton mills.
- Corrosive Gas
  Do not keep the drive in locations with corrosive gas. For example, chemical plants, refineries, and sewage plants.
- Salt Damage
  Do not keep the drive in salty locations. For example, locations near the ocean, and salt damage-designated locations.

Do not keep the drive in unsatisfactory locations. Keep all drives in storage rooms that are safe from unsatisfactory elements.

◆ Regular Application of Power

To prevent deterioration of the capacitors, the manufacturer recommends that you apply power to the drive a minimum of one time each year for a minimum of 30 minutes.

If you store the drive for longer than two years and do not apply power, the manufacturer recommends that you use a variable power source and gradually increase the power from 0 V to the rated drive voltage over a period of 2 to 3 minutes. Apply power for a minimum of 1 hour with no load to reform the main circuit electrolytic capacitor. When you operate the drive after you apply power, wire the drive correctly and check for drive faults, overcurrents, motor vibration, motor speed differences, and other defects during operation.

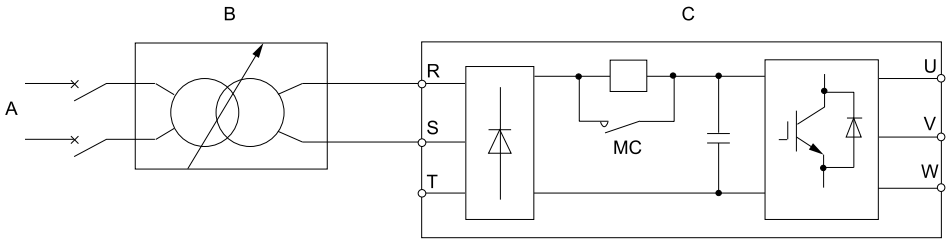

A - AC power supply
B - Variable power source
C - Drive

Figure 8.24 Power Distribution Method

9

Disposal

9.1 Safety Precautions 286
9.2 Disposal Instructions 287
9.3 WEEE Directive 288

9.1 Safety Precautions

⚠WARNING

Electrical Shock Hazard

De-energize the drive and wait 5 minutes minimum until the Charge LED turns off. Remove the front cover and terminal cover to do work on wiring, circuit boards, and other parts. Use terminals for their correct function only.

Incorrect wiring, incorrect ground connections, and incorrect repair of protective covers can cause death or serious injury.

Only let approved personnel install, wire, maintain, examine, replace parts, and repair the drive.

If personnel are not approved, it can cause serious injury or death.

Do not wear loose clothing or jewelry when you do work on the drive. Tighten loose clothing and remove all metal objects, for example watches or rings.

Loose clothing can catch on the drive and jewelry can conduct electricity and cause serious injury or death.

Crush Hazard

Wear eye protection when you do work on the drive.

If you do not use correct safety equipment, it can cause serious injury or death.

⚠CAUTION

Crush Hazard

Tighten terminal cover screws and hold the case safely when you move the drive.

If the drive or covers fall, it can cause moderate injury.

9.2 Disposal Instructions

Correctly dispose of the drive and packing material as specified by applicable regional, local, and municipal laws and regulations.

9.3 WEEE Directive

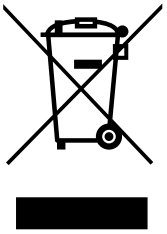

The wheelie bin symbol on this product, its manual, or its packaging identifies that you must recycle it at the end of its product life.

You must discard the product at an applicable collection point for electrical and electronic equipment (EEE). Do not discard the product with usual waste.

10

Specifications

10.1 Safety Precautions 290
10.2 Drive Duty Modes 291
10.3 Model Specifications (Three-Phase 200 V Class) 292
10.4 Model Specifications (Single-Phase 200 V Class) 295
10.5 Model Specifications (Three-Phase 400 V Class) 296
10.6 Drive Specifications 298
10.7 Drive Derating 301
10.8 Drive Models and Drive Watt Loss 304
10.9 Drive Exterior and Mounting Dimensions 307
10.10 Peripheral Devices and Options 312

10.1 Safety Precautions

⚠DANGER

Do not ignore the safety messages in this manual.

If you ignore the safety messages in this manual, it will cause serious injury or death. The manufacturer is not responsible for injuries or damage to equipment.

10.2 Drive Duty Modes

The drive has two duty modes from which to select for the application: Heavy Duty (HD) and Normal Duty (ND).

Table 10.1 Drive Duty Modes

Duty Rating	C6-01 Setting	Application	Default Carrier Frequency	Overload Tolerance (oL2 [Drive Overload])
Heavy Duty Rating (HD)	0	• Extruder • Conveyor • Cranes and hoists • Constant torque or high overload capacity	Determined by o2-04, A1-02	150% of the rated output current for 60 seconds The permitted frequency of overload is once every 10 minutes.
Normal Duty Rating (ND)	1	• Fan • Pump • Blower • Variable speed control	Determined by o2-04, A1-02	110% of the rated output current for 60 seconds The permitted frequency of overload is once every 10 minutes.

10.3 Model Specifications (Three-Phase 200 V Class)

Table 10.2 Ratings (Three-Phase 200 V Class)

Model			2001	2002	2004	2006
Maximum Applicable Motor Output (kW)		HD *1	0.1	0.25	0.55	1.1
		ND *2	0.18	0.37	0.75	1.1
Maximum Applicable Motor Output (HP)		HD *1	1/6	1/4	1/2	1
		ND *2	1/6	1/4	3/4	1.5
Input	Rated Input Current (A)	HD	0.7	1.5	2.9	5.8
		ND	1.1	1.9	3.9	7.3
Output	Rated Output Capacity (kVA) *3	HD	0.3	0.6	1.1	1.9
		ND	0.5	0.7	1.3	2.3
	Rated Output Current (A)	HD	0.8	1.6	3.0	5.0
		ND	1.2	1.9	3.5	6
	Overload Tolerance		• HD: 150% of the rated output current for 60 seconds. The permitted frequency of overload is once every 10 minutes. • ND: 110% of the rated output current for 60 seconds. The permitted frequency of overload is once every 10 minutes. **Note:** Derating may be necessary for applications that start and stop frequently.			
	Carrier Frequency		HD: 10 kHz without derating the drive capacity. ND: 2 kHz without derating the drive capacity. Derate the drive capacity to use values to 15 kHz maximum.			
	Maximum Output Voltage		Three-phase 200 V to 240 V **Note:** The maximum output voltage is proportional to the input voltage.			
	Maximum Output Frequency		• EZ Vector: 120 Hz • PM AOLVector: 270 Hz • V/f Control, OLVector, PM OLVector: 590 Hz			
Measures for Harmonics	DC reactor		External options			
Braking Device	Braking Transistor		Standard internal characteristics			
EMC Filter	EMC Filter IEC61800-3		Q2V-A2xxx-Axx: 20 m (65.6 ft.) maximum, Class C3 (Conducted emission)			
Power Supply	Rated Voltage/Rated Frequency		• Three-phase AC power supply 200 V to 240 V at 50/60 Hz • DC power supply 270 V to 340 V			
	Permitted Voltage Fluctuation		-15% to +10%			
	Permitted Frequency Fluctuation		±5%			
	Input Power (kVA)	HD	0.3	0.7	1.3	2.7
		ND	0.5	1.2	1.8	3.3

Table 10.3 Ratings (Three-Phase 200 V Class)

Model			2008	2010	2012	2018	2021
Maximum Applicable Motor Output (kW)		HD *1	1.1	1.5	2.2	3	4.0
		ND *2	1.5	2.2	3	3.7	5.5
Maximum Applicable Motor Output (HP)		HD *1	1.5	2	3	4	5
		ND *2	2	3	4	5	5
Input	Rated Input Current (A)	HD	7.0	7.5	11	15.6	18.9
		ND	8.8	10.8	13.9	18.5	24

Model			2008	2010	2012	2018	2021
Output	Rated Output Capacity (kVA) *3	HD	2.6	3	4.2	5.3	6.7
		ND	3	3.7	4.6	6.7	8
	Rated Output Current (A)	HD	6.9	8.0	11.0	14.0	17.6
		ND	8	9.6	12.2	17.5	21
	Overload Tolerance		• HD: 150% of the rated output current for 60 seconds. The permitted frequency of overload is once every 10 minutes. • ND: 110% of the rated output current for 60 seconds. The permitted frequency of overload is once every 10 minutes. **Note:** Derating may be necessary for applications that start and stop frequently.				
	Carrier Frequency		HD: 8 kHz without derating the drive capacity. ND: 2 kHz without derating the drive capacity. Derate the drive capacity to use values to 15 kHz maximum.				
	Maximum Output Voltage		Three-phase 200 V to 240 V **Note:** The maximum output voltage is proportional to the input voltage.				
	Maximum Output Frequency		• V/f Control, OLVector, PM OLVector: 590 Hz • PM AOLVector: 270 Hz • EZ Vector: 120 Hz				
Measures for Harmonics	DC reactor		External options				
Braking Device	Braking Transistor		Standard internal characteristics				
EMC Filter	EMC Filter IEC61800-3		Q2V-A2xxx-Axx: 20 m (65.6 ft.) maximum, Class C3 (Conducted emission)				
Power Supply	Rated Voltage/Rated Frequency		• Three-phase AC power supply 200 V to 240 V at 50/60 Hz • DC power supply 270 V to 340 V				
	Permitted Voltage Fluctuation		-15% to +10%				
	Permitted Frequency Fluctuation		±5%				
	Input Power (kVA)	HD	3.2	3.4	5.0	7.1	8.7
		ND	4.0	4.9	6.4	8.5	11

Table 10.4 Ratings (Three-Phase 200 V Class)

Model			2030	2042	2056	2070	2082
Maximum Applicable Motor Output (kW)		HD *1	5.5	7.5	11	15	18.5
		ND *2	7.5	11	15	18.5	22
Maximum Applicable Motor Output (HP)		HD *1	7.5	10	15	20	25
		ND *2	10	10	20	25	30
Input	Rated Input Current (A)	HD	24	37	52	68	96
		ND	37	52	68	80	114

Model			2030	2042	2056	2070	2082
Output	Rated Output Capacity (kVA) *3	HD	9.5	12.6	17.9	22.9	28.6
		ND	11.4	16	21.3	26.7	31.2
	Rated Output Current (A)	HD	25.0	33.0	47.0	60.0	75.0
		ND	30	42	56	70	82
	Overload Tolerance		• HD: 150% of the rated output current for 60 seconds. The permitted frequency of overload is once every 10 minutes. • ND: 110% of the rated output current for 60 seconds. The permitted frequency of overload is once every 10 minutes. **Note:** Derating may be necessary for applications that start and stop frequently.				
	Carrier Frequency		HD: 8 kHz without derating the drive capacity. ND: 2 kHz without derating the drive capacity. Derate the drive capacity to use values to 15 kHz maximum.				
	Maximum Output Voltage		Three-phase 200 V to 240 V **Note:** The maximum output voltage is proportional to the input voltage.				
	Maximum Output Frequency		• V/f Control, OLVector, PM OLVector: 590 Hz • PM AOLVector: 270 Hz • EZ Vector: 120 Hz				
Measures for Harmonics	DC reactor		External options				
Braking Device	Braking Transistor		Standard internal characteristics				
EMC Filter	EMC Filter IEC61800-3		Q2V-A2xxx-Axx: 20 m (65.6 ft.) maximum, Class C3 (Conducted emission)				
Power Supply	Rated Voltage/Rated Frequency		• Three-phase AC power supply 200 V to 240 V at 50/60 Hz • DC power supply 270 V to 340 V				
	Permitted Voltage Fluctuation		-15% to +10%				
	Permitted Frequency Fluctuation		±5%				
	Input Power (kVA)	HD	11.0	17.0	24.0	31.0	44.0
		ND	17.0	24.0	31.0	37.0	52.0

*1 The maximum applicable motor output complies with 208 V motor ratings as specified in NEC Table 430.250. The rated output current of the drive output amps must be equal to or more than the motor rated current.

*2 The maximum applicable motor output is based on 4-pole, general-purpose 220 V motor ratings. The rated output current of the drive output amps must be equal to or more than the motor rated current.

*3 The rated output capacity is calculated with a rated output voltage of 220 V.

10.4 Model Specifications (Single-Phase 200 V Class)

Table 10.5 Ratings (Single-Phase 200 V Class)

Model			B001	B002	B004	B006	B010	B012	B018
Maximum Applicable Motor Output (kW)		HD *1	0.1	0.25	0.55	1.1	1.5	2.2	4.0
		ND *2	0.2 0.18	0.37	0.75	1.1	2.2	3.0	-
Maximum Applicable Motor Output (HP)		HD *1	1/6	1/4	1/2	1	2	3	5
		ND *2	1/6	1/4	3/4	1.5	3	3	-
Input	Rated Input Current (A)	HD	1.4	2.8	5.5	11	14.1	20.6	35.0
		ND	2.0	5.0	7.3	13.8	20.2	24.0	-
Output	Rated Output Capacity (kVA) *3	HD	0.3	0.6	1.1	1.9	3	4.2	6.7
		ND	0.5	0.7	1.3	2.3	3.7	4.6	-
	Rated Output Current (A)	HD	0.8	1.6	3	5	8	11	17.6
		ND	1.2	1.9	3.5	6	9.6	12.2	-
	Overload Tolerance		• HD: 150% of the rated output current for 60 seconds. The permitted frequency of overload is once every 10 minutes. • ND: 110% of the rated output current for 60 seconds. The permitted frequency of overload is once every 10 minutes. **Note:** Derating may be necessary for applications that start and stop frequently.						
	Carrier Frequency		HD: 10 kHz without derating the drive capacity. ND: 2 kHz without derating the drive capacity. Derate the drive capacity to use values to 15 kHz maximum.				HD: 8 kHz without derating the drive capacity. ND: 2 kHz without derating the drive capacity. Derate the drive capacity to use values to 15 kHz maximum.		
	Maximum Output Voltage		Single-phase 200 V to 240 V **Note:** The maximum output voltage is proportional to the input voltage.						
	Maximum Output Frequency		• V/f Control, OLVector, PM OLVector: 590 Hz • PM AOLVector: 270 Hz • EZ Vector: 120 Hz						
Measures for Harmonics	AC reactor		External options						
Braking Device	Braking Transistor		Standard internal characteristics						External options
EMC Filter	EMC Filter IEC61800-3		Q2V-ABxxx-Axx: 10 m (32.8 ft.) maximum, Class C1 (Conducted emission)						External options
Power Supply	Rated Voltage/Rated Frequency		• Single-phase AC power supply 200 V to 240 V at 50/60 Hz • DC power supply 270 V to 340 V						
	Permitted Voltage Fluctuation		-15% to +10%						
	Permitted Frequency Fluctuation		±5%						
	Input Power (kVA)	HD	0.4	0.7	1.5	2.9	3.7	5.4	9.2
		ND	0.5	1.3	1.9	3.6	5.3	6.3	-

*1 The maximum applicable motor output complies with 208 V motor ratings as specified in NEC Table 430.250. The rated output current of the drive output amps must be equal to or more than the motor rated current.

*2 The maximum applicable motor output is based on 4-pole, general-purpose 220 V motor ratings. The rated output current of the drive output amps must be equal to or more than the motor rated current.

*3 The rated output capacity is calculated with a rated output voltage of 220 V.

10.5 Model Specifications (Three-Phase 400 V Class)

Table 10.6 Ratings (Three-Phase 400 V Class)

Model		Duty Rating	4001	4002	4004	4005	4007	4009	4012
Maximum Applicable Motor Output *1 (kW)		HD	0.37	0.55	1.1	1.5	2.2	3.0	4.0
		ND	0.37	0.75	1.5	2.2	3.0	4.0	5.5
Maximum Applicable Motor Output *1 (HP)		HD	1/2	3/4	2	3	3	4	5
		ND	1/2	1	2	3	4	5	7.5
Input	Rated Input Current (A)	HD	1.2	1.8	3.2	4.4	6.0	8.2	10.4
		ND	1.2	2.1	4.3	5.9	8.1	9.4	14
Output	Rated Output Capacity *2 (kVA)	HD	0.9	1.4	2.6	3.7	4.3	5.6	7
		ND	0.9	1.6	3.1	4.1	5.4	6.8	9.1
	Rated Output Current (A)	HD	1.2	1.8	3.4	4.8	5.6	7.3	9.2
		ND	1.2	2.1	4.1	5.4	7.1	8.9	11.9
	Overload Tolerance		• HD: 150% of the rated output current for 60 seconds. The permitted frequency of overload is once every 10 minutes. • ND: 110% of the rated output current for 60 seconds. The permitted frequency of overload is once every 10 minutes. **Note:** Derating may be necessary for applications that start and stop frequently.						
	Carrier Frequency		HD: 8 kHz without derating the drive capacity. ND: 2 kHz without derating the drive capacity. Derate the drive capacity to use values to 15 kHz maximum.						
	Maximum Output Voltage		Three-phase 380 V to 480 V **Note:** The maximum output voltage is proportional to the input voltage.						
	Maximum Output Frequency		• V/f Control, OLVector, PM OLVector: 590 Hz • PM AOLVector: 270 Hz • EZ Vector: 120 Hz						
Measures for Harmonics	DC reactor		External options						
Braking Device	Braking Transistor		Standard internal characteristics						
EMC Filter	EMC Filter IEC61800-3		Q2V-A4xxx-Axx: 20 m (65.6 ft.) maximum, Class C2 (Conducted emission)						
Power Supply	Rated Voltage/Rated Frequency		Three-phase AC power supply 380 V to 480 V at 50/60 Hz						
	Permitted Voltage Fluctuation		-15% to +10%						
	Permitted Frequency Fluctuation		±5%						
	Input Power (kVA)	HD	1.1	1.6	2.9	4	5.5	7.5	9.5
		ND	1.1	1.9	3.9	5.4	7.4	8.6	13

*1 The maximum applicable motor output complies with 380 V motor ratings as specified in Annex G of IEC 60947-4-1. The rated output current of the drive output amps must be equal to or more than the motor rated current.

*2 The rated output capacity is calculated with a rated output voltage of 440 V.

Table 10.7 Ratings (Three-Phase 400 V Class)

Model		Duty Rating	4018	4023	4031	4038	4044	4060
Maximum Applicable Motor Output *1 (kW)		HD	5.5	7.5	11.0	15.0	18.5	22.0
		ND	7.5	11.0	15.0	18.5	22.0	30.0
Maximum Applicable Motor Output *1 (HP)		HD	10	10	15	20	25	30
		ND	10	15	20	25	30	40
Input	Rated Input Current (A)	HD	15	20	29	39	50.5	59.7
		ND	20	24	38	44	59.7	80.7

Model		Duty Rating	4018	4023	4031	4038	4044	4060
Output	Rated Output Capacity *2 (kVA)	HD	11.3	13.7	18.3	23.6	29.7	34.3
		ND	13.3	17.8	23.6	29	33.5	45.7
	Rated Output Current (A)	HD	14.8	18.0	24.0	31.0	39.0	45.0
		ND	17.5	23.4	31.0	38.0	44.0	60
	Overload Tolerance		• HD: 150% of the rated output current for 60 seconds. The permitted frequency of overload is once every 10 minutes. • ND: 110% of the rated output current for 60 seconds. The permitted frequency of overload is once every 10 minutes. **Note:** Derating may be necessary for applications that start and stop frequently.					
	Carrier Frequency		HD: 8 kHz without derating the drive capacity. ND: 2 kHz without derating the drive capacity. Derate the drive capacity to use values to 15 kHz maximum.					
	Maximum Output Voltage		Three-phase 380 V to 480 V **Note:** The maximum output voltage is proportional to the input voltage.					
	Maximum Output Frequency		• V/f Control, OLVector, PM OLVector: 590 Hz • PM AOLVector: 270 Hz • EZ Vector: 120 Hz					
Measures for Harmonics	DC reactor		External options					
Braking Device	Braking Transistor		Standard internal characteristics					
EMC Filter	EMC Filter IEC61800-3		Q2V-A4xxx-Axx: 20 m (65.6 ft.) maximum, Class C2 (Conducted emission)					
Power Supply	Rated Voltage/Rated Frequency		Three-phase AC power supply 380 V to 480 V at 50/60 Hz					
	Permitted Voltage Fluctuation		-15% to +10%					
	Permitted Frequency Fluctuation		±5%					
	Input Power (kVA)	HD	14	18	27	36	47	55
		ND	18	22	35	40	55	74

*1 The maximum applicable motor output complies with 380 V motor ratings as specified in Annex G of IEC 60947-4-1. The rated output current of the drive output amps must be equal to or more than the motor rated current.

*2 The rated output capacity is calculated with a rated output voltage of 440 V.

10.6 Drive Specifications

Note:
- To get the OLV specifications, do Rotational Auto-Tuning.
- To get the longest product life, install the drive in an environment that meets the necessary specifications.

Table 10.8 Control Characteristics

Item	Specification
Control Methods	• V/f Control (V/f Control) • Open Loop Vector (OLVector) • PM Open Loop Vector (PM OLVector) • PM Advanced Open Loop Vector (PM AOLVector) • EZ Vector Control (EZ Vector)
Frequency Control Range	• V/f Control, OLVector, PM OLVector: 0.01 Hz to 590 Hz • PM AOLVector: 0.01 Hz to 270 Hz • EZ Vector: 0.01 Hz to 120 Hz
Frequency Accuracy (Temperature Fluctuation)	Digital inputs: ±0.01% of the maximum output frequency (-10 °C to +40 °C (14 °F to 104 °F)) Analog inputs: Within ±0.1% of the maximum output frequency (25 °C ±10 °C (77 °F ±18 °F))
Frequency Setting Resolution	Digital inputs: 0.01 Hz Analog inputs: 1/2048 of the maximum output frequency (11-bit signed)
Output Frequency Resolution	0.001 Hz
Frequency Setting Signal	Main speed frequency reference: 0 Vdc to 10 Vdc (20 kΩ), 4 mA to 20 mA (250 Ω), 0 mA to 20 mA (250 Ω) Main speed reference: Pulse train input (maximum 32 kHz)
Starting Torque	• V/f Control: 150%/3 Hz • OLVector: 150%/1 Hz • PM OLVector: 100%/5% speed • PM AOLVector: 100%/0 min^{-1} (when high frequency injection is enabled) • EZ Vector: 100%/10% speed **Note:** Correctly select the drive and motor capacity for this starting torque in these control methods: • OLVector • PM AOLVector
Speed Control Range	• V/f Control: 1:40 • OLVector: 1:100 • PM OLVector: 1:10 • PM AOLVector: 1:100 (when high frequency injection is enabled) • EZ Vector: 1:10
Zero Speed Control	Possible in these control methods: • PM AOLVector
Torque Limits	Parameter settings allow different limits in four quadrants in these control methods: • OLVector • PM AOLVector • EZ Vector
Acceleration and Deceleration Times	0.0 s to 6000.0 s The drive can set four pairs of different acceleration and deceleration times.
Braking Torque	Approximately 20% Approximately 125% with a dynamic braking option • Short-time average deceleration torque Motor output 0.1/0.2 kW: over 150% Motor output 0.4/0.75 kW: over 100% Motor output 1.5 kW: over 50% Motor output 2.2 kW and larger: over 20%, Overexcitation Braking/High Slip Braking allow for approximately 40% **WARNING!** *Set L3-04 = 0 [StallP@Decel Enable = Disabled] when you operate the drive with:* • *a regenerative converter* • *regenerative unit* • *braking resistor* • *braking resistor unit.* *If you set the parameter incorrectly, the drive can decelerate for too long and cause serious injury or death.* **Note:** • Short-time average deceleration torque refers to the torque needed to decelerate the motor (uncoupled from the load) from the rated speed to zero. Motor characteristics can change the actual specifications. • Motor characteristics change the continuous regenerative torque and short-time average deceleration torque for motors 2.2 kW and larger.

Item	Specification
V/f Characteristics	Select from 15 pre-defined V/f patterns, or a user-set V/f pattern.
Main Control Functions	Feed Forward Control, Restart After Momentary Power Loss, Speed Search, Overtorque Detection, Torque Limit, 17 Step Speed (max.), Accel/Decel Switch, S-curve Acceleration/Deceleration, 3-wire Sequence, Auto-Tuning (Rotational and Stationary), Dwell Function, Cooling Fan ON/OFF Switch, Slip Compensation, Torque Compensation, Frequency Jump, Upper/Lower Limits for Frequency Reference, DC Injection Braking at Start and Stop, Overexcitation Braking, High Slip Braking, PID Control (with Sleep Function), Energy Saving Control, Modbus Communications (RS-485 max, 115.2 kbps), Auto Restart, Application Presets, Q2pack (customized functions), Parameter Backup Function, Online Tuning, KEB, Overexcitation Deceleration, Overvoltage Suppression, High Frequency Injection, etc.

Table 10.9 Protection Functions

Item	Specification
Motor Protection	Electronic thermal overload protection
Momentary Overcurrent Protection	Drive stops when the output current is more than 200% of the HD output current. **Note:** Standard value is 200%. Different capacity drives have different values.
Overload Protection	Drive stops when the output current is more than these overload tolerances: • HD: 150% of the rated output current for 60 seconds. The permitted frequency of overload is once every 10 minutes. • ND: 110% of the rated output current for 60 seconds. The permitted frequency of overload is once every 10 minutes. **Note:** If output frequency < 6 Hz, the drive can trigger the overload protection function when the output current is in the overload tolerance range.
Overvoltage Protection	200 V class: Stops when the DC bus voltage is more than approximately 410 V 400 V class: Stops when the DC bus voltage is more than approximately 820 V
Undervoltage Protection	Three-phase 200 V class: Stops when the DC bus voltage decreases to less than approximately 190 V Single-phase 200 V class: Stops when the DC bus voltage decreases to less than approximately 160 V Three-phase 400 V class: Stops when the DC bus voltage decreases to less than approximately 380 V
Momentary Power Loss Ride-thru	Stops when power loss is longer than 15 ms and continues operation if power loss is shorter than 2 s (depending on parameter settings). **Note:** • Stop time may be shortened depending on the load and motor speed. • Drive capacity will change the continuous operation time. A Momentary Power Loss Recovery Unit is necessary to continue operation through a 2 s power loss on models 2001 to 2042 and 4001 to 4023.
Heatsink Overheat Protection	Thermistor
Braking Resistor Overheat Protection	Overheat detection for braking resistor (optional ERF-type, 3% ED)
Stall Prevention	Stall prevention is available during acceleration, deceleration, and during run.
Ground Fault Protection	Electronic circuit protection **Note:** This protection detects ground faults during run. The drive will not provide protection when: • There is a low-resistance ground fault for the motor cable or terminal block • Energizing the drive when there is a ground fault.
DC Bus Charge LED	Charge LED illuminates when DC bus voltage is more than 50 V.

Table 10.10 Environment

Item	Specification
Area of Use	Indoors
Power Supply	Overcurrent Category III
Ambient Temperature Setting	IP20/UL Open Type: -10°C to +50 °C (14 °F to 122 °F) IP20/UL Type 1: -10 °C to +40 °C (14 °F to 104 °F) • When installing the drive in an enclosure, use a cooling fan or air conditioner to keep the internal air temperature in the permitted range. • Do not let the drive freeze.
Humidity	95% RH or less Do not let condensation form on the drive.
Storage Temperature	-20 °C to +70 °C (-4 °F to +158 °F) (short-term temperature during transportation)
Surrounding Area	Pollution degree 2 or less Install the drive in an area without: • Oil mist, corrosive or flammable gas, or dust • Metal powder, oil, water, or other unwanted materials • Radioactive materials or flammable materials, including wood • Harmful gas or fluids • Salt • Direct sunlight

Item	Specification
Altitude	1000 m (3281 ft) Maximum **Note:** Derate the output current by 1% for each 100 m (328 ft) to install the drive in altitudes between 1000 to 4000 m (3281 to 13123 ft). It is not necessary to derate the rated voltage in these conditions: • Installing the drive at 2000 m (6562 ft) or lower • Installing the drive between 2000 to 4000 m (6562 to 13123 ft) and grounding the neutral point on the power supply. Contact the manufacturer or your nearest sales representative when not grounding the neutral point.
Vibration	• 10 Hz to 20 Hz: 1 G (9.8 m/s^2, 32.15 ft/s^2) • 20 Hz to 55 Hz: 0.6 G (5.9 m/s^2, 19.36 ft/s^2)
Installation Orientation	Install the drive vertically for sufficient airflow to cool the drive.

Table 10.11 Standard

Item	Specification
Harmonized Standard	• UL 61800-5-1 • EN 61800-3 • EN 61800-5-1 • Two Safe Disable inputs and one EDM output according to EN ISO 13849-1 (Cat.3, PL e), EN 61800-5-2 SIL3
Protection design	IP20/UL Open Type IP20/UL Type 1 **Note:** Install a UL Type 1 kit (optional) on an IP20/UL Open Type drive to convert the drive to an IP20/UL Type 1.

10.7 Drive Derating

You must derate the drive capacity to operate the drive above the rated temperature, altitude, and default carrier frequency.

◆ Carrier Frequency Settings and Rated Current Values

The tables in this section show how the drive rated output current changes when the *C6-02 [Carrier Frequency Selection]* value changes. The output current value changes linearly as the carrier frequency changes. You can use the values from the tables to calculate a frequency that is not shown.

■ Three-Phase 200 V Class

Table 10.12 Carrier Frequency and Rated Current Derating (Three-Phase 200 V)

Model	Rated Current (A)											
	Heavy Duty Rating (HD) [C6-01 = 0]						Normal Duty Rating (ND) [C6-01 = 1]					
	2 kHz	5 kHz	8 kHz	10 kHz	12.5 kHz	15 kHz	2 kHz	5 kHz	8 kHz	10 kHz	12.5 kHz	15 kHz
2001	0.8	0.8	0.8	0.8	0.7	0.6	1.2	1.1	1.0	0.9	0.8	0.6
2002	1.6	1.6	1.6	1.6	1.4	1.3	1.9	1.9	1.7	1.6	1.4	1.3
2004	3.0	3.0	3.0	3.0	2.7	2.4	3.5	3.5	3.2	3.0	2.7	2.4
2006	5.0	5.0	5.0	5.0	4.5	4.0	6.0	6.0	5.4	5.0	4.5	4.0
2008	6.9	6.9	6.9	6.5	6.0	5.5	8.0	7.6	7.0	6.6	6.0	5.5
2010	8.0	8.0	8.0	7.5	7.0	6.4	9.6	9.1	8.3	7.7	7.1	6.4
2012	11.0	11.0	11.0	10.4	9.6	8.8	12.2	11.9	11.0	10.4	9.6	8.8
2018	14.0	14.0	14.0	13.2	12.2	11.2	17.5	16.5	14.9	13.8	12.5	11.2
2021	17.6	17.6	17.6	16.6	15.3	14.1	21.0	19.8	18.1	17.0	15.5	14.1
2030	25.0	25.0	25.0	23.6	21.8	20	30.0	28.3	25.8	24.2	22.1	20
2042	33.0	33.0	33.0	31.1	28.8	26	42.0	39.4	35.5	32.9	29.7	26
2056	47.0	47.0	47.0	44.3	41.0	38	56.0	52.9	48.3	45.3	41.4	38
2070	60.0	60.0	60.0	56.6	52.3	48	70.0	66.3	60.8	57.2	52.6	48
2082	75.0	75.0	75.0	70.7	65.4	60	82.0	81.4	75.0	70.7	65.4	60

Table 10.13 AOLV/PM Carrier Frequency and Rated Current Derating (Three-Phase 200 V)

Model	Rated Current (A)											
	Heavy Duty Rating (HD) [C6-01 = 0]						Normal Duty Rating (ND) [C6-01 = 1]					
	2 kHz	4 kHz	6 kHz	8 kHz	10 kHz	12 kHz	2 kHz	4 kHz	6 kHz	8 kHz	10 kHz	12 kHz
2001	0.8	0.8	0.8	0.7	0.6	0.5	1.2	1.1	0.9	0.8	0.6	0.5
2002	1.6	1.6	1.6	1.5	1.3	1.1	1.9	1.9	1.7	1.5	1.3	1.1
2004	3.0	3.0	3.0	2.8	2.4	2.0	3.5	3.5	3.1	2.8	2.4	2.0
2006	5.0	5.0	5.0	4.6	4.0	3.4	6.0	5.8	5.2	4.6	4.0	3.4
2008	6.9	6.9	6.7	6.1	5.5	4.9	8.0	7.4	6.8	6.1	5.5	4.9
2010	8.0	8.0	7.8	7.1	6.4	5.7	9.6	8.8	8.0	7.2	6.4	5.6
2012	11.0	11.0	10.7	9.7	8.8	7.9	12.2	11.6	10.7	9.7	8.8	7.9
2018	14.0	14.0	13.6	12.4	11.2	10.0	17.5	15.9	14.4	12.8	11.2	9.6
2021	17.6	17.6	17.1	15.6	14.1	12.6	21.0	19.3	17.5	15.8	14.1	12.4
2030	25.0	25.0	24.3	22.1	20.0	17.9	30.0	27.5	25.0	22.5	20.0	17.5
2042	33.0	33.0	32.1	29.2	26.4	23.6	42.0	38.1	34.2	30.3	26.4	22.5
2056	47.0	47.0	45.7	41.6	37.6	33.6	56.0	51.4	46.8	42.2	37.6	33.0
2070	60.0	60.0	58.3	53.1	48.0	42.9	70.0	64.5	59.0	53.5	48.0	42.5
2082	75.0	75.0	72.9	66.4	60.0	53.6	82.0	79.3	72.9	66.4	60.0	53.6

■ Single-Phase 200 V Class

Table 10.14 Carrier Frequency and Rated Current Derating (Single-Phase 200 V)

Model	Rated Current (A)											
	Heavy Duty Rating (HD) [C6-01 = 0]						Normal Duty Rating (ND) [C6-01 = 1]					
	2 kHz	5 kHz	8 kHz	10 kHz	12.5 kHz	15 kHz	2 kHz	5 kHz	8 kHz	10 kHz	12.5 kHz	15 kHz
B001	0.8	0.8	0.8	0.8	0.7	0.6	1.2	1.1	1.0	0.9	0.8	0.6
B002	1.6	1.6	1.6	1.6	1.4	1.3	1.9	1.9	1.7	1.6	1.4	1.3
B004	3.0	3.0	3.0	3.0	2.7	2.4	3.5	3.5	3.2	3.0	2.7	2.4
B006	5.0	5.0	5.0	5.0	4.5	4.0	6.0	6.0	5.4	5.0	4.5	4.0
B010	8.0	8.0	8.0	7.5	7.0	6.4	9.6	9.1	8.3	7.7	7.1	6.4
B012	11.0	11.0	11.0	10.4	9.6	8.8	12.2	11.9	11.0	10.4	9.6	8.8
B018	17.6	17.6	17.6	16.6	15.3	14.1	21.0	19.8	18.1	17.0	15.5	14.1

Table 10.15 AOLV/PM Carrier Frequency and Rated Current Derating (Single-Phase 200 V)

Model	Rated Current (A)											
	Heavy Duty Rating (HD) [C6-01 = 0]						Normal Duty Rating (ND) [C6-01 = 1]					
	2 kHz	4 kHz	6 kHz	8 kHz	10 kHz	12 kHz	2 kHz	4 kHz	6 kHz	8 kHz	10 kHz	12 kHz
B001	0.8	0.8	0.8	0.7	0.6	0.5	1.2	1.1	0.9	0.8	0.6	0.5
B002	1.6	1.6	1.6	1.5	1.3	1.1	1.9	1.9	1.7	1.5	1.3	1.1
B004	3.0	3.0	3.0	2.8	2.4	2.0	3.5	3.5	3.1	2.8	2.4	2.0
B006	5.0	5.0	5.0	4.6	4.0	3.4	6.0	5.8	5.2	4.6	4.0	3.4
B010	8.0	8.0	7.8	7.1	6.4	5.7	9.6	8.8	8.0	7.2	6.4	5.6
B012	11.0	11.0	10.7	9.7	8.8	7.9	12.2	11.6	10.7	9.7	8.8	7.9
B018	17.6	17.6	17.1	15.6	14.1	12.6	21.0	19.3	17.5	15.8	14.1	12.3

■ Three-Phase 400 V Class

Table 10.16 Carrier Frequency and Rated Current Derating (Three-Phase 400 V)

Model	Rated Current (A)											
	Heavy Duty Rating (HD) [C6-01 = 0]						Normal Duty Rating (ND) [C6-01 = 1]					
	2 kHz	5 kHz	8 kHz	10 kHz	12.5 kHz	15 kHz	2 kHz	5 kHz	8 kHz	10 kHz	12.5 kHz	15 kHz
4001	1.2	1.2	1.2	1.1	0.9	0.7	1.2	1.2	1.2	1.1	0.9	0.7
4002	1.8	1.8	1.8	1.6	1.3	1.1	2.1	2.1	1.8	1.6	1.3	1.1
4004	3.4	3.4	3.4	3.0	2.5	2.0	4.1	4.0	3.4	3.0	2.5	2.0
4005	4.8	4.8	4.8	4.3	3.6	2.9	5.4	5.4	4.8	4.2	3.6	2.9
4007	5.5	5.5	5.5	4.9	4.1	3.3	7.1	6.5	5.5	4.9	4.1	3.3
4009	7.3	7.3	7.3	6.5	5.4	4.4	8.9	8.6	7.3	6.5	5.4	4.4
4012	9.2	9.2	9.2	8.1	6.8	5.5	11.9	10.8	9.2	8.2	6.8	5.5
4018	14.8	14.8	14.8	13.1	11.0	8.9	17.8	17.3	14.7	13.1	11.0	8.8
4023	18.0	18.0	18.0	13.1	11.0	11	23.4	21.3	18.2	16.1	13.4	11
4031	24.0	24.0	24.0	21.3	17.8	14	31.0	28.2	24.1	21.3	17.9	14
4038	31.0	31.0	31.0	27.5	23.0	19	38.0	36.3	31.0	27.5	23.0	19
4044	39.0	39.0	39.0	34.5	29.0	23	44.0	44.0	39.0	34.5	29.0	23
4060	45.0	45.0	45.0	39.9	33.4	27	60.0	54.5	46.3	40.8	33.9	27

Table 10.17 AOLV/PM Carrier Frequency and Rated Current Derating (Three-Phase 400 V)

Model	Rated Current (A)											
	Heavy Duty Rating (HD) [C6-01 = 0]						Normal Duty Rating (ND) [C6-01 = 1]					
	2 kHz	4 kHz	6 kHz	8 kHz	10 kHz	12 kHz	2 kHz	4 kHz	6 kHz	8 kHz	10 kHz	12 kHz
4001	1.2	1.2	1.1	0.9	0.7	0.5	1.2	1.2	1.1	0.9	0.7	0.5
4002	1.8	1.8	1.7	1.4	1.1	0.8	2.1	2.0	1.7	1.4	1.1	0.8
4004	3.4	3.4	3.2	2.6	2.0	1.5	4.1	3.8	3.2	2.6	2.0	1.5
4005	4.8	4.8	4.5	3.7	2.9	2.1	5.4	5.3	4.5	3.7	2.9	2.1
4007	5.5	5.5	5.2	4.2	3.3	2.4	7.1	6.2	5.2	4.3	3.3	2.4
4009	7.3	7.3	6.9	5.6	4.4	3.1	8.9	8.1	6.9	5.6	4.4	3.1
4012	9.2	9.2	8.7	7.1	5.5	3.9	11.9	10.3	8.7	7.1	5.5	3.9
4018	14.8	14.8	14.0	11.4	8.9	6.3	17.8	16.4	15.2	11.4	8.8	6.3
4023	18.0	18.0	17.0	13.9	10.8	7.7	23.4	20.3	17.1	14.0	10.8	7.7
4031	24.0	24.0	22.6	18.5	14.4	10.3	31.0	26.9	22.7	18.6	14.4	10.3
4038	31.0	31.0	29.2	23.9	18.6	13.3	38.0	34.5	29.2	23.9	18.6	13.3
4044	39.0	39.0	36.8	30.1	23.4	16.7	44.0	43.5	36.8	30.1	23.4	16.7
4060	45.0	45.0	42.4	34.7	27.0	19.3	60.0	51.8	43.5	35.3	27.0	18.8

◆ Derating Depending on Ambient Temperature

When you install drives in a place where ambient temperatures are higher than the rated conditions or install drives side-by-side in the enclosure panel, set *L8-12 [Ambient Temperature Setting]* and *L8-35 [Installation Selection]*. Derate the output current as specified in Figure 10.1.

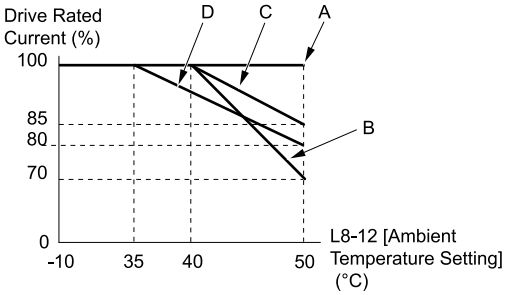

A - L8-35 = 0 [IP00/IP20/Open-Chassis]
B - L8-35 = 1 [Side-by-Side Mounting]
C - L8-35 = 2 [UL Type 1]
D - L8-35 = 3 [Ext. Heatsink]

Figure 10.1 Derating Depending on Drive Installation Method

◆ Altitude Derating

Install the drive in a location that has an altitude of 1000 m (3281 ft) or lower.

Derate the output current by 1% for each 100 m (328 ft) to install the drive in altitudes between 1000 to 4000 m (3281 to 13123 ft).

It is not necessary to derate the rated voltage in these conditions:

- Installing the drive at 2000 m (6562 ft) or lower
- Installing the drive between 2000 to 4000 m (6562 to 13123 ft) and grounding the neutral point on the power supply.
  If you do not ground the drive with a neutral network, contact the manufacturer or your nearest sales representative.

10.8 Drive Models and Drive Watt Loss

◆ Drive Watt Loss (with Built-in EMC Filter)

■ Three-Phase 200 V Class

Table 10.18 Drive Watt Loss (HD, Fc = 2 kHz)

Model	Rated output current A	Carrier Frequency kHz	Interior Unit Loss W	Cooling Fin Loss W	Total Loss W
2001	0.8	2	7	4	11
2002	1.6	2	8	7	15
2004	3.0	2	12	13	25
2006	5.0	2	20	22	42
2008	6.9	2	15	30	45
2010	8.0	2	18	37	55
2012	11.0	2	24	49	73
2018	14.0	2	27	61	88
2021	17.6	2	37	83	120
2030	25.0	2	46	163	209
2042	33.0	2	56	200	256
2056	47.0	2	78	269	347
2070	60.0	2	109	411	520
2082	75.0	2	133	439	572

Table 10.19 Drive Watt Loss (HD, Fc = Default Setting)

Model	Rated output current A	Carrier Frequency kHz	Interior Unit Loss W	Cooling Fin Loss W	Total Loss W
2001	1.2	10	7	5	12
2002	1.9	10	8	8	16
2004	3.5	10	13	16	29
2006	6	10	21	27	48
2008	8	8	16	35	51
2010	9.6	8	19	43	62
2012	12.2	8	25	56	81
2018	17.5	8	31	82	113
2021	21	8	41	108	149
2030	30	8	50	187	237
2042	42	8	61	232	293
2056	56	8	86	318	404
2070	70	8	120	473	593
2082	82	8	149	525	674

■ Single-Phase 200 V Class

Table 10.20 Drive Watt Loss (HD, Fc = 2 kHz)

Model	Rated output current A	Carrier Frequency kHz	Interior Unit Loss W	Cooling Fin Loss W	Total Loss W
B001	0.8	2	8	4	12
B002	1.6	2	12	7	19
B004	3	2	17	13	30
B006	5	2	20	23	43

Model	Rated output current A	Carrier Frequency kHz	Interior Unit Loss W	Cooling Fin Loss W	Total Loss W
B010	8	2	34	37	71
B012	11	2	45	48	93
B018	17.6	2	50	72	122

Table 10.21 Drive Watt Loss (HD, Fc = Default Setting)

Model	Rated output current A	Carrier Frequency kHz	Interior Unit Loss W	Cooling Fin Loss W	Total Loss W
B001	0.8	10	9	5	14
B002	1.6	10	12	9	21
B004	3	10	18	16	34
B006	5	10	21	28	49
B010	8	8	35	42	77
B012	11	8	46	55	101
B018	17.6	8	54	98	152

Table 10.22 Drive Watt Loss (ND)

Model	Rated output current A	Carrier Frequency kHz	Interior Unit Loss W	Cooling Fin Loss W	Total Loss W
B001	1.2	2	9	6	15
B002	1.9	2	18	11	29
B004	3.5	2	19	17	36
B006	6.0	2	20	26	46
B010	9.6	2	44	50	94
B012	12.2	2	56	60	116
B018	N/A	2	50	92	142

■ Three-Phase 400 V Class

Table 10.23 Drive Watt Loss (HD, Fc = 2 kHz)

Model	Rated output current A	Carrier Frequency kHz	Interior Unit Loss W	Cooling Fin Loss W	Total Loss W
4001	1.2	2	9	7	16
4002	1.8	2	11	10	21
4004	3.4	2	15	21	36
4005	4.8	2	17	29	46
4007	5.6	2	18	33	51
4009	7.3	2	24	45	69
4012	9.2	2	29	60	89
4018	14.8	2	52	126	178
4023	18	2	57	152	209
4031	24	2	73	191	264
4038	31	2	89	256	345
4044	39	2	119	338	457
4060	45	2	128	328	456

Table 10.24 Drive Watt Loss (HD, Fc = Default Setting)

Model	Rated output current A	Carrier Frequency kHz	Interior Unit Loss W	Cooling Fin Loss W	Total Loss W
4001	1.2	8	10	11	21
4002	1.8	8	12	16	28
4004	3.4	8	17	31	48

Model	Rated output current A	Carrier Frequency kHz	Interior Unit Loss W	Cooling Fin Loss W	Total Loss W
4005	4.8	8	20	42	62
4007	5.6	8	20	49	69
4009	7.3	8	28	65	93
4012	9.2	8	34	85	119
4018	14.8	8	59	166	225
4023	18	8	65	200	265
4031	24	8	84	255	339
4038	31	8	103	338	441
4044	39	8	137	442	579
4060	45	8	149	446	595

Table 10.25 Drive Watt Loss (ND)

Model	Rated output current A	Carrier Frequency kHz	Interior Unit Loss W	Cooling Fin Loss W	Total Loss W
4001	1.2	2	9	7	16
4002	2.1	2	14	12	26
4004	4.1	2	16	24	40
4005	5.4	2	18	32	50
4007	7.1	2	23	44	67
4009	8.9	2	33	58	91
4012	11.9	2	41	83	124
4018	17.5	2	56	155	211
4023	23.4	2	94	236	330
4031	31	2	109	284	393
4038	38	2	119	341	460
4044	44	2	151	417	568
4060	60	2	200	490	690

10.9 Drive Exterior and Mounting Dimensions

◆ IP20/UL Open Type (Models B001 to B004, 2001 to 2006)

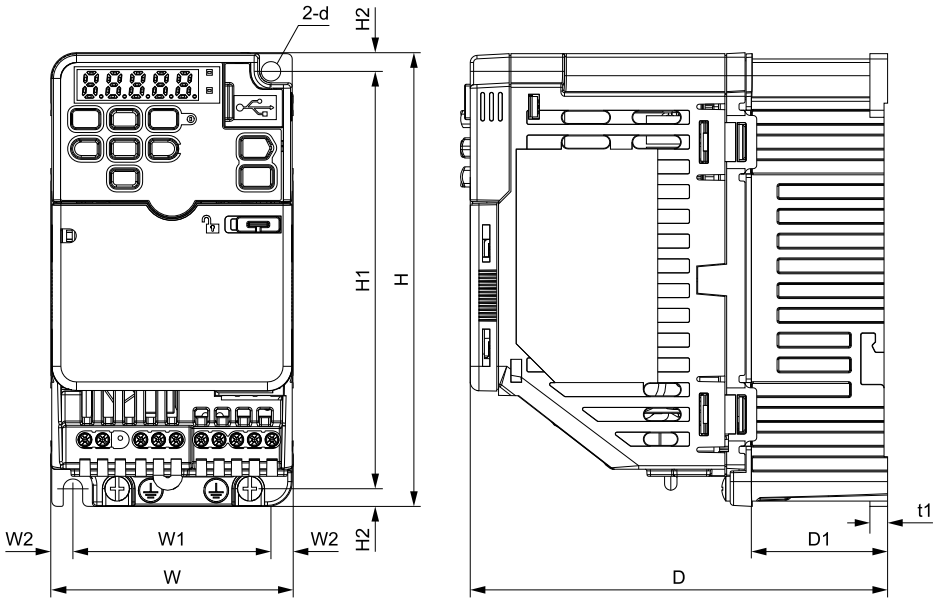

Figure 10.2 Exterior and Mounting Dimensions

Table 10.26 Single-Phase 200 V Class (IP20/UL Open Type, without Built-in EMC Filter)

Model	Dimensions mm (in)										Est. Weight kg (lb)
	W	H	D	W1	W2	H1	H2	D1	t1	d	
B001B	68 (2.68)	128 (5.04)	76 (2.99)	56 (2.20)	6 (0.24)	118 (4.65)	5 (0.20)	6.5 (0.26)	3 (0.12)	M5	0.5 (1.1)
B002B	68 (2.68)	128 (5.04)	76 (2.99)	56 (2.20)	6 (0.24)	118 (4.65)	5 (0.20)	6.5 (0.26)	3 (0.12)	M5	0.5 (1.1)
B004B	68 (2.68)	128 (5.04)	118 (4.65)	56 (2.20)	6 (0.24)	118 (4.65)	5 (0.20)	38.5 (1.52)	5 (0.20)	M5	0.8 (1.8)

Table 10.27 Single-Phase 200 V Class (IP20/UL Open Type, with Built-in EMC Filter)

Model	Dimensions mm (in)										Est. Weight kg (lb)
	W	H	D	W1	W2	H1	H2	D1	t1	d	
B001A	68 (2.68)	128 (5.04)	116 (4.57)	56 (2.20)	6 (0.24)	118 (4.65)	5 (0.20)	6.5 (0.26)	3 (0.12)	M5	0.7 (1.6)
B002A	68 (2.68)	128 (5.04)	116 (4.57)	56 (2.20)	6 (0.24)	118 (4.65)	5 (0.20)	6.5 (0.26)	3 (0.12)	M5	0.7 (1.6)
B004A	68 (2.68)	128 (5.04)	158 (6.22)	56 (2.20)	6 (0.24)	118 (4.65)	5 (0.20)	38.5 (1.52)	5 (0.20)	M5	1.0 (2.2)

Table 10.28 Three-Phase 200 V Class (IP20/UL Open Type, without Built-in EMC Filter)

Model	Dimensions mm (in)										Est. Weight kg (lb)
	W	H	D	W1	W2	H1	H2	D1	t1	d	
2001B	68 (2.68)	128 (5.04)	76 (2.99)	56 (2.20)	6 (0.24)	118 (4.65)	5 (0.20)	6.5 (0.26)	3 (0.12)	M5	0.5 (1.1)
2002B	68 (2.68)	128 (5.04)	76 (2.99)	56 (2.20)	6 (0.24)	118 (4.65)	5 (0.20)	6.5 (0.26)	3 (0.12)	M5	0.5 (1.1)
2004B	68 (2.68)	128 (5.04)	108 (4.25)	56 (2.20)	6 (0.24)	118 (4.65)	5 (0.20)	38.5 (1.52)	5 (0.20)	M5	0.8 (1.8)
2006B	68 (2.68)	128 (5.04)	128 (5.04)	56 (2.20)	6 (0.24)	118 (4.65)	5 (0.20)	58.5 (2.30)	5 (0.20)	M5	0.9 (2.0)

Table 10.29 Three-Phase 200 V Class (IP20/UL Open Type, with Built-in EMC Filter)

Model	Dimensions mm (in)										Est. Weight kg (lb)
	W	H	D	W1	W2	H1	H2	D1	t1	d	
2001A	68 (2.68)	128 (5.04)	116 (4.57)	56 (2.20)	6 (0.24)	118 (4.65)	5 (0.20)	6.5 (0.26)	3 (0.12)	M5	0.6 (1.3)
2002A	68 (2.68)	128 (5.04)	116 (4.57)	56 (2.20)	6 (0.24)	118 (4.65)	5 (0.20)	6.5 (0.26)	3 (0.12)	M5	0.6 (1.3)
2004A	68 (2.68)	128 (5.04)	148 (5.83)	56 (2.20)	6 (0.24)	118 (4.65)	5 (0.20)	38.5 (1.52)	5 (0.20)	M5	0.9 (2.0)
2006A	68 (2.68)	128 (5.04)	168 (6.61)	56 (2.20)	6 (0.24)	118 (4.65)	5 (0.20)	58.5 (2.30)	5 (0.20)	M5	1.1 (2.4)

◆ IP20/UL Open Type (Models B006 to B018, 2010 to 2021, 4001 to 4012)

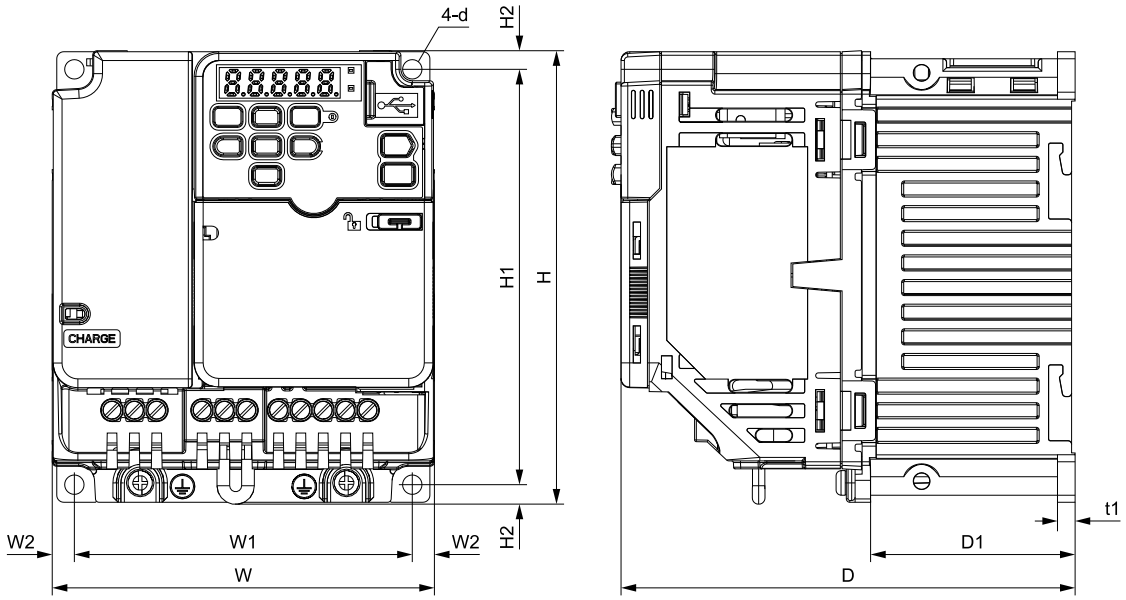

Figure 10.3 Exterior and Mounting Dimensions

Table 10.30 Single-Phase 200 V Class (IP20/UL Open Type, without Built-in EMC Filter)

Model	Dimensions mm (in)										Est. Weight kg (lb)
	W	H	D	W1	W2	H1	H2	D1	t1	d	
B006B	108 (4.25)	128 (5.04)	137.5 (5.41)	96 (3.78)	6 (0.24)	118 (4.65)	5 (0.20)	56.5 (2.22)	5 (0.20)	M5	1.5 (3.3)
B010B	108 (4.25)	128 (5.04)	154 (6.06)	96 (3.78)	6 (0.24)	118 (4.65)	5 (0.20)	56.5 (2.22)	5 (0.20)	M5	1.5 (3.3)
B012B	140 (5.51)	128 (5.04)	163 (6.42)	128 (5.04)	6 (0.24)	118 (4.65)	5 (0.20)	65 (2.56)	5 (0.20)	M5	2.1 (4.6)
B018B	170 (6.69)	128 (5.04)	180 (7.09)	158 (6.22)	6 (0.24)	118 (4.65)	5 (0.20)	65 (2.56)	5 (0.20)	M5	2.9 (6.4)

Table 10.31 Single-Phase 200 V Class (IP20/UL Open Type, with Built-in EMC Filter)

Model	Dimensions mm (in)										Est. Weight kg (lb)
	W	H	D	W1	W2	H1	H2	D1	t1	d	
B006A	108 (4.25)	128 (5.04)	182.5 (7.19)	96 (3.78)	6 (0.24)	118 (4.65)	5 (0.20)	56.5 (2.22)	5 (0.20)	M5	1.8 (4.0)
B010A	108 (4.25)	128 (5.04)	199 (7.83)	96 (3.78)	6 (0.24)	118 (4.65)	5 (0.20)	56.5 (2.22)	5 (0.20)	M5	1.8 (4.0)
B012A	140 (5.51)	128 (5.04)	203 (7.99)	128 (5.04)	6 (0.24)	118 (4.65)	5 (0.20)	65 (2.56)	5 (0.20)	M5	2.7 (6.0)

Table 10.32 Three-Phase 200 V Class (IP20/UL Open Type, without Built-in EMC Filter)

Model	Dimensions mm (in)										Est. Weight kg (lb)
	W	H	D	W1	W2	H1	H2	D1	t1	d	
2010B	108 (4.25)	128 (5.04)	129 (5.08)	96 (3.78)	6 (0.24)	118 (4.65)	5 (0.20)	56.5 (2.22)	5 (0.20)	M5	1.5 (3.3)
2012B	108 (4.25)	128 (5.04)	137.5 (5.41)	96 (3.78)	6 (0.24)	118 (4.65)	5 (0.20)	56.5 (2.22)	5 (0.20)	M5	1.5 (3.3)
2021B	140 (5.51)	128 (5.04)	143 (5.63)	128 (5.04)	6 (0.24)	118 (4.65)	5 (0.20)	65 (2.56)	5 (0.20)	M5	2.0 (4.4)

Table 10.33 Three-Phase 200 V Class (IP20/UL Open Type, with Built-in EMC Filter)

Model	Dimensions mm (in)										Est. Weight kg (lb)
	W	H	D	W1	W2	H1	H2	D1	t1	d	
2010A	108 (4.25)	128 (5.04)	174 (6.85)	96 (3.78)	6 (0.24)	118 (4.65)	5 (0.20)	56.5 (2.22)	5 (0.20)	M5	1.6 (3.5)
2012A	108 (4.25)	128 (5.04)	182.5 (7.19)	96 (3.78)	6 (0.24)	118 (4.65)	5 (0.20)	56.5 (2.22)	5 (0.20)	M5	1.6 (3.5)
2021A	140 (5.51)	128 (5.04)	193 (7.60)	128 (5.04)	6 (0.24)	118 (4.65)	5 (0.20)	65 (2.56)	5 (0.20)	M5	2.4 (5.3)

Table 10.34 Three-Phase 400 V Class (IP20/UL Open Type, without Built-in EMC Filter)

Model	Dimensions mm (in)										Est. Weight kg (lb)
	W	H	D	W1	W2	H1	H2	D1	t1	d	
4001B	108 (4.25)	128 (5.04)	81 (3.19)	96 (3.78)	6 (0.24)	118 (4.65)	5 (0.20)	8.5 (0.33)	5 (0.20)	M5	0.8 (1.8)
4002B	108 (4.25)	128 (5.04)	99 (3.90)	96 (3.78)	6 (0.24)	118 (4.65)	5 (0.20)	26.5 (1.04)	5 (0.20)	M5	0.9 (2.0)
4004B	108 (4.25)	128 (5.04)	137.5 (5.41)	96 (3.78)	6 (0.24)	118 (4.65)	5 (0.20)	56.5 (2.22)	5 (0.20)	M5	1.5 (3.3)
4005B	108 (4.25)	128 (5.04)	154 (6.06)	96 (3.78)	6 (0.24)	118 (4.65)	5 (0.20)	56.5 (2.22)	5 (0.20)	M5	1.5 (3.3)
4007B	108 (4.25)	128 (5.04)	154 (6.06)	96 (3.78)	6 (0.24)	118 (4.65)	5 (0.20)	56.5 (2.22)	5 (0.20)	M5	1.5 (3.3)
4009B	108 (4.25)	128 (5.04)	154 (6.06)	96 (3.78)	6 (0.24)	118 (4.65)	5 (0.20)	56.5 (2.22)	5 (0.20)	M5	1.5 (3.3)
4012B	140 (5.51)	128 (5.04)	143 (5.63)	128 (5.04)	6 (0.24)	118 (4.65)	5 (0.20)	65 (2.56)	5 (0.20)	M5	2.0 (4.4)

Table 10.35 Three-Phase 400 V Class (IP20/UL Open Type, with Built-in EMC Filter)

Model	Dimensions mm (in)										Est. Weight kg (lb)
	W	H	D	W1	W2	H1	H2	D1	t1	d	
4001A	108 (4.25)	128 (5.04)	126 (4.96)	96 (3.78)	6 (0.24)	118 (4.65)	5 (0.20)	8.5 (0.33)	5 (0.20)	M5	1.4 (3.1)
4002A	108 (4.25)	128 (5.04)	144 (5.67)	96 (3.78)	6 (0.24)	118 (4.65)	5 (0.20)	26.5 (1.04)	5 (0.20)	M5	1.5 (3.3)
4004A	108 (4.25)	128 (5.04)	182.5 (7.19)	96 (3.78)	6 (0.24)	118 (4.65)	5 (0.20)	56.5 (2.22)	5 (0.20)	M5	1.9 (4.2)
4005A	108 (4.25)	128 (5.04)	199 (7.83)	96 (3.78)	6 (0.24)	118 (4.65)	5 (0.20)	56.5 (2.22)	5 (0.20)	M5	1.9 (4.2)
4007A	108 (4.25)	128 (5.04)	199 (7.83)	96 (3.78)	6 (0.24)	118 (4.65)	5 (0.20)	56.5 (2.22)	5 (0.20)	M5	1.9 (4.2)
4009A	108 (4.25)	128 (5.04)	199 (7.83)	96 (3.78)	6 (0.24)	118 (4.65)	5 (0.20)	56.5 (2.22)	5 (0.20)	M5	1.9 (4.2)
4012A	140 (5.51)	128 (5.04)	193 (7.60)	128 (5.04)	6 (0.24)	118 (4.65)	5 (0.20)	65 (2.56)	5 (0.20)	M5	2.6 (5.7)

◆ IP20/UL Open Type (Models 2030 to 2082, 4018 to 4060)

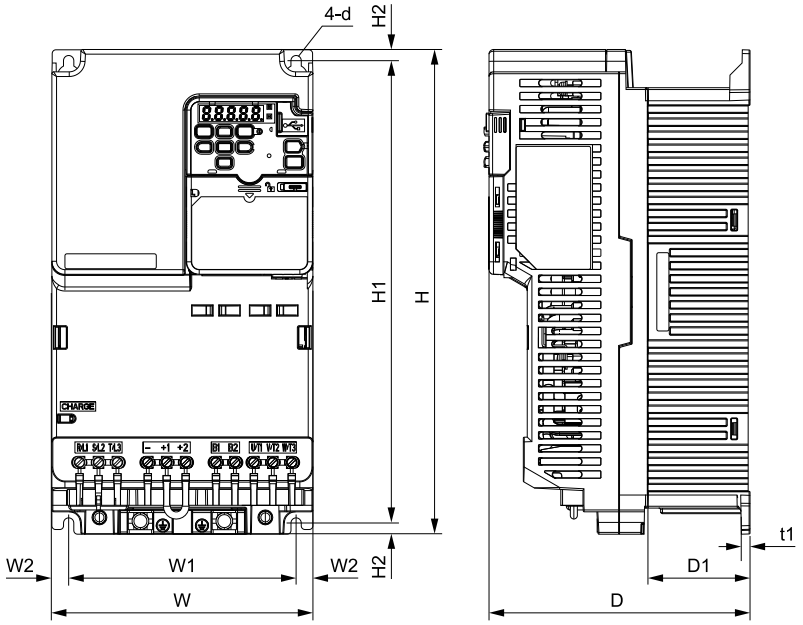

Figure 10.4 Exterior and Mounting Dimensions

Table 10.36 Three-Phase 200 V Class (IP20/UL Open Type, without Built-in EMC Filter)

Model	Dimensions mm (in)										Est. Weight kg (lb)
	W	H	D	W1	W2	H1	H2	D1	t1	d	
2030B	140 (5.51)	260 (10.24)	140 (5.51)	122 (4.80)	9 (0.35)	248 (9.76)	6 (0.24)	55 (2.17)	5 (0.20)	M5	3.4 (7.5)
2042B	140 (5.51)	260 (10.24)	140 (5.51)	122 (4.80)	9 (0.35)	248 (9.76)	6 (0.24)	55 (2.17)	5 (0.20)	M5	3.6 (7.9)
2056B	180 (7.09)	300 (11.81)	143 (5.63)	160 (6.30)	10 (0.39)	284 (11.18)	8 (0.31)	55 (2.17)	5 (0.20)	M5	5.5 (12.1)
2070B	220 (8.66)	350 (13.78)	187 (7.36)	192 (7.56)	14 (0.55)	336 (13.23)	7 (0.28)	78 (3.07)	5 (0.20)	M6	7.5 (16.5)
2082B	220 (8.66)	350 (13.78)	187 (7.36)	192 (7.56)	14 (0.55)	336 (13.23)	7 (0.28)	78 (3.07)	5 (0.20)	M6	8.0 (17.6)

Table 10.37 Three-Phase 200 V Class (IP20/UL Open Type, with Built-in EMC Filter)

Model	Dimensions mm (in)										Est. Weight kg (lb)
	W	H	D	W1	W2	H1	H2	D1	t1	d	
2030A	140 (5.51)	260 (10.24)	196 (7.72)	122 (4.80)	9 (0.35)	248 (9.76)	6 (0.24)	55 (2.17)	5 (0.20)	M5	3.9 (8.6)
2042A	140 (5.51)	260 (10.24)	196 (7.72)	122 (4.80)	9 (0.35)	248 (9.76)	6 (0.24)	55 (2.17)	5 (0.20)	M5	4.1 (9.0)
2056A	180 (7.09)	300 (11.81)	196 (7.72)	160 (6.30)	10 (0.39)	284 (11.18)	8 (0.31)	55 (2.17)	5 (0.20)	M5	6.0 (13.2)
2070A	220 (8.66)	350 (13.78)	216 (8.50)	192 (7.56)	14 (0.55)	336 (13.23)	7 (0.28)	78 (3.07)	5 (0.20)	M6	8.5 (18.7)
2082A	220 (8.66)	350 (13.78)	216 (8.50)	192 (7.56)	14 (0.55)	336 (13.23)	7 (0.28)	78 (3.07)	5 (0.20)	M6	9.0 (19.9)

Table 10.38 Three-Phase 400 V Class (IP20/UL Open Type, without Built-in EMC Filter)

Model	Dimensions mm (in)										Est. Weight kg (lb)
	W	H	D	W1	W2	H1	H2	D1	t1	d	
4018B	140 (5.51)	260 (10.24)	140 (5.51)	122 (4.80)	9 (0.35)	248 (9.76)	6 (0.24)	55 (2.17)	5 (0.20)	M5	3.0 (6.6)
4023B	140 (5.51)	260 (10.24)	140 (5.51)	122 (4.80)	9 (0.35)	248 (9.76)	6 (0.24)	55 (2.17)	5 (0.20)	M5	3.2 (7.1)

Model	Dimensions mm (in)										Est. Weight kg (lb)
	W	H	D	W1	W2	H1	H2	D1	t1	d	
4031B	180 (7.09)	300 (11.81)	143 (5.63)	160 (6.30)	10 (0.39)	284 (11.18)	8 (0.31)	55 (2.17)	5 (0.20)	M5	4.6 (10.2)
4038B	180 (7.09)	300 (11.81)	143 (5.63)	160 (6.30)	10 (0.39)	284 (11.18)	8 (0.31)	55 (2.17)	5 (0.20)	M5	4.8 (10.6)
4044B	190 (7.48)	350 (13.78)	204 (8.03)	160 (6.30)	15 (0.59)	336 (13.23)	7 (0.28)	94 (3.70)	5 (0.20)	M6	6.5 (14.3)
4060B	190 (7.48)	350 (13.78)	204 (8.03)	160 (6.30)	15 (0.59)	336 (13.23)	7 (0.28)	94 (3.70)	5 (0.20)	M6	6.5 (14.3)

Table 10.39 Three-Phase 400 V Class (IP20/UL Open Type, with Built-in EMC Filter)

Model	Dimensions mm (in)										Est. Weight kg (lb)
	W	H	D	W1	W2	H1	H2	D1	t1	d	
4018A	140 (5.51)	260 (10.24)	196 (7.72)	122 (4.80)	9 (0.35)	248 (9.76)	6 (0.24)	55 (2.17)	5 (0.20)	M5	3.9 (8.6)
4023A	140 (5.51)	260 (10.24)	196 (7.72)	122 (4.80)	9 (0.35)	248 (9.76)	6 (0.24)	55 (2.17)	5 (0.20)	M5	3.9 (8.6)
4031A	180 (7.09)	300 (11.81)	196 (7.72)	160 (6.30)	10 (0.39)	284 (11.18)	8 (0.31)	55 (2.17)	5 (0.20)	M5	5.5 (12.1)
4038A	180 (7.09)	300 (11.81)	196 (7.72)	160 (6.30)	10 (0.39)	284 (11.18)	8 (0.31)	55 (2.17)	5 (0.20)	M5	5.5 (12.1)
4044A	190 (7.48)	350 (13.78)	251 (9.88)	160 (6.30)	15 (0.59)	336 (13.23)	7 (0.28)	94 (3.70)	5 (0.20)	M6	8.0 (17.6)
4060A	190 (7.48)	350 (13.78)	251 (9.88)	160 (6.30)	15 (0.59)	336 (13.23)	7 (0.28)	94 (3.70)	5 (0.20)	M6	8.5 (18.7)

10.10 Peripheral Devices and Options

These tables show the available peripheral devices and options for the drive. Contact the manufacturer or your nearest sales representative to make an order.

- Selection: Refer to the drive catalog for information about available products.
- Installation and wiring: Refer to the instruction manual for each option.

Table 10.40 Main Circuit Options

Name	Model	Intended Use
AC reactor	LR3 series and ALR3 series	To improve the drive input power factor. • To prevent damage to the drive when the power supply capacity is large. You must only use this option when the power supply capacity is more than 600 kVA. • To decrease harmonic current. • To improve the power supply total power factor.
Braking Resistor	ERF-150WJ Series	To decrease the regenerative energy of the motor and decrease the deceleration time (duty cycle of 3% ED). You must also use the installation attachment.
Residual Current Monitoring/ Detection (RCM/RCD)	NV and NS series	To prevent short circuit damage to the power supply system, provide overload protection for wiring, prevent electrical shock, and provide ground fault protection against earth leakage fires. **Note:** • You can use a molded-case circuit breaker as a replacement for an RCM/RCD that is upstream in the power supply system. • When you use a high frequency RCM/RCD at the power input side of the drive, make sure that each drive has a minimum cumulative sensitivity amperage of 30 mA.
Molded-Case Circuit Breaker (MCCB)	NF series	To prevent short circuit damage to the power supply system and provide overload protection for wiring.
Input Side Magnetic Contactor (MC)	SC series	To prevent burn damage when connecting a braking resistor. This option fully opens the circuit between the power supply and drive.

Table 10.41 Attachments

Name	Model	Intended Use
Heatsink External Mounting Kit	ZPSA-GA50Vx-x	Use this option to install the heatsink outside of the control panel.
DIN Rail Attachment	ZPZ-GA50Vx EZZ08122D	To use a DIN rail to install the drive.
Communication Option Case	JOHB-Q2V	To install a communication option on a drive.

Table 10.42 Engineering Tools

Name	Model	Intended Use
Q2edit	-	To use a PC to program drives and manage parameters.
Q2dev	-	To use a PC to do advanced drive programming.

Table 10.43 Communication Options

Name	Model	Intended Use	Document No.
EtherNet/IP	SI-EN3	This option uses the host controller over EtherNet/IP communication to: • Operate and stop the drive • Set and view parameters • Monitor output frequency, output current, and other statuses	TOBPC73060092 SIJPC73060092
PROFINET	SI-EP3	This option uses the host controller over PROFINET communication to: • Operate and stop the drive • Set and view parameters • Monitor output frequency, output current, and other statuses	TOBPC73060089 SIJPC73060089
EtherCAT	SI-ES3	This option uses the host controller over EtherCAT communication to: • Operate and stop the drive • Set and view parameters • Monitor output frequency, output current, and other statuses	Contact the manufacturer or your nearest sales representative for more information.
Powerlink	SI-EL3	This option uses the host controller over Powerlink communication to: • Operate and stop the drive • Set and view parameters • Monitor output frequency, output current, and other statuses	Contact the manufacturer or your nearest sales representative for more information.

11

Parameter List

11.1 How to Read the Parameter List 314
11.2 Parameter Groups 315
11.3 A: INITIALIZATION 316
11.4 b: APPLICATION 318
11.5 C: TUNING 327
11.6 d: REFERENCE 331
11.7 E: MOTOR 335
11.8 F: OPTIONS 340
11.9 H: TERMINALS 348
11.10 L: PROTECTION 365
11.11 n: SPECIAL 375
11.12 o: KEYPAD 381
11.13 q: Q2PACK PARAMETERS 387
11.14 r: Q2PACK JOINTS 388
11.15 T: AUTOTUNING 389
11.16 U: MONITORS 392
11.17 Parameters that Change from the Default Settings with A1-02 [Control Method] 403
11.18 Parameters that Change from the Default Settings with E3-01 [M2 Control Method Selection] 407
11.19 Parameters Changed by E1-03 [V/f Pattern Selection] 408
11.20 Defaults by Drive Model and Duty Rating ND/HD 409
11.21 Parameters Changed by PM Motor Code Selection 421

11.1 How to Read the Parameter List

◆ Icons and Terms that Identify Parameters and Control Modes

Icon	Description
V/f	The parameter is available when operating the drive with V/f Control.
OLV	The parameter is available when operating the drive with OLVector.
OLV/PM	The parameter is available when operating the drive with PM OLVector.
AOLV/PM	The parameter is available when operating the drive with PM AOLVector.
EZOLV	The parameter is available when operating the drive with EZ Vector.
Hex.	Hexadecimal numbers that represent Modbus addresses to change parameters over network communication.
RUN	The parameter can be changed settings during run.
Expert	The parameter that is available in Expert Mode only. *1

*1 Set *A1-01 = 3 [Access Level = Expert Parameters]* to display and set Expert Mode parameters on the keypad.

Note:
Gray icons identify parameters that are not available in the specified control method.

11.2 Parameter Groups

Represents the type of product parameters.

Parameter	Name
A: INITIALIZATION	
A1	A1: INITIALIZATION
A2	A2: MANUAL SELECTION
b: APPLICATION	
b1	b1: OPERATION MODE SELECT
b2	b2: DC INJ / SHORT CKT BRAKE
b3	b3: SPEED SEARCH
b4	b4: TIMER
b5	b5: PID CONTROL
b6	b6: DWELL FUNCTION
b8	b8: ENERGY SAVING
C: TUNING	
C1	C1: ACCEL / DECEL
C2	C2: JERK CONTROL
C3	C3: SLIP COMPENSATION
C4	C4: TORQUE COMPENSATION
C5	C5: ASR - SPEED REGULATION
C6	C6: DUTY AND CARRIER
d: REFERENCE	
d1	d1: FREQUENCY REFERENCE
d2	d2: REFERENCE LIMITS
d3	d3: JUMP FREQUENCY
d4	d4: FREQUENCY UP/DOWN
d6	d6: FIELD WEAKENING / FORCING
d7	d7: OFFSET FREQUENCY
E: MOTOR	
E1	E1: V/F PARAMETER MOTOR 1
E2	E2: MOTOR 1 PARAMETERS
E3	E3: V/F PARAMETER MOTOR 2
E4	E4: MOTOR 2 PARAMETERS
E5	E5: PM MOTOR SETTINGS
E9	E9: SIMPLE VECTOR SETTINGS
F: OPTIONS	
F1	F1: ENCODER
F6	F6: COMMUNICATIONS
F7	F7: ETHERNET
H: TERMINALS	
H1	H1: DIGITAL INPUTS
H2	H2: DIGITAL OUTPUTS
H3	H3: ANALOG INPUTS
H4	H4: ANALOG OUTPUTS
H5	H5: MODBUS PORTS
H6	H6: PULSE INPUT OUTPUT

Parameter	Name
H7	H7: VIRTUAL INPUT OUTPUT
L: PROTECTION	
L1	L1: MOTOR PROTECTION
L2	L2: POWER LOSS RIDE THROUGH
L3	L3: STALL PREVENTION
L4	L4: SPEED DETECTION
L5	L5: FAULT RESTART
L6	L6: TORQUE DETECTION
L7	L7: TORQUE LIMIT
L8	L8: DRIVE PROTECTION
n: SPECIAL	
n1	n1: HUNTING PREVENTION
n2	n2: AFR - AUTO FREQ REGULATION
n3	n3: HIGHSLIP/OVEREXCITATION BRAKE
n5	n5: FEED FORWARD CONTROL
n6	n6: ONLINE TUNING
n7	n7: SIMPLE VECTOR TUNING
n8	n8: PM MOTOR CONTROL TUNING
nA	nA: PM MOTOR CONTROL TUNING
o: KEYPAD	
o1	o1: KEYPAD DISPLAY
o2	o2: KEYPAD OPERATION
o3	o3: COPY FUNCTION
o4	o4: MAINTENANCE MONITORS
o5	o5: DATA LOGGER
q: Q2PACK PARAMETERS	
q	q1-01 to q8-40: Q2pack Parameters
r: Q2PACK JOINTS	
r	r1: Q2PACK JOINTS
T: AUTOTUNING	
T0	T0: TUNE MODE
T1	T1: INDUCTION MOTOR
T2	T2: PM MOTOR
T3	T3: ASR
T4	T4: SIMPLE VECTOR
U1	U1: STATUS
U2	U2: FAULT
U3	U3: FAULT HISTORY
U4	U4: MAINTENANCE
U5	U5: PID
U6	U6: ADVANCED
U8	U8: Q2PACK MONITORS

11.3 A: INITIALIZATION

◆ A1: INITIALIZATION

No. (Hex.)	Name	Description	Default (Range)	Ref.
A1-00 (0100) RUN	Language Selection	V/f OLV OLV/PM AOLV/PM EZOLV Sets the language for the LCD keypad. **Note:** When you use *A1-03 [Init Parameters]* to initialize the drive, the drive will not reset this parameter. 0 : English 1 : Japanese 2 : German 3 : French 4 : Italian 5 : Spanish 6 : Portuguese 7 : Chinese 8 : Czech 9 : Russian 10 : Turkish 11 : Polish 12 : Greek	0 (0 - 12)	432
A1-01 (0101) RUN	Access Level	V/f OLV OLV/PM AOLV/PM EZOLV Sets user access to parameters. The access level controls which parameters the keypad will display, and which parameters the user can set. 0 : Monitor only 1 : Manual Setup 2 : Standard Parameters 3 : Expert Parameters	2 (0 - 3)	432
A1-02 (0102)	Control Method	V/f OLV OLV/PM AOLV/PM EZOLV Sets the control method for the drive application and the motor. 0 : V/f Control 2 : OLVector 5 : PM OLVector 6 : PM AOLVector 8 : EZ Vector	0 (0, 2, 5, 6, 8)	433
A1-03 (0103)	Init Parameters	V/f OLV OLV/PM AOLV/PM EZOLV Sets parameters to default values. 0 : No Initialization 1110 : User / Solution Initialization 2220 : 2-Wire Initialization 3330 : 3-Wire Initialization	0 (0 - 3330)	434
A1-04 (0104)	Password Input	V/f OLV OLV/PM AOLV/PM EZOLV Entry point for the password set in *A1-05 [Password Setting]*. The user can view the settings of parameters that are locked without entering the password. Enter the correct password in this parameter to change parameter settings.	0000 (0000 - 9999)	435
A1-05 (0105)	Password Setting	V/f OLV OLV/PM AOLV/PM EZOLV Set the password to lock parameters and prevent changes to parameter settings. Enter the correct password in *A1-04 [Password Input]* to unlock parameters and accept changes.	0000 (0000 - 9999)	435
A1-07 (0128)	Q2pack Enable	V/f OLV OLV/PM AOLV/PM EZOLV Sets the drive to operate with Q2pack. 0 : Disable Q2pack 1 : Enable Q2pack 2 : With DI	0 (0 - 2)	436
A1-11 (111D) Expert	Firmware Update Lock	V/f OLV OLV/PM AOLV/PM EZOLV Protects the drive firmware. When you enable the protection, you cannot update the drive firmware. 0 : Disabled 1 : Enabled	0 (0, 1)	436
A1-12 (1564)	Bluetooth ID	V/f OLV OLV/PM AOLV/PM EZOLV Sets the password necessary to use Bluetooth to control the drive with a smartphone or tablet.	- (0000 - 9999)	436

◆ A2: MANUAL SELECTION

No. (Hex.)	Name	Description	Default (Range)	Ref.
A2-01 to A2-32 (0106 - 0125)	MAN1 Param1 to MAN3 Param12	V/f OLV **OLV/PM** AOLV/PM EZOLV You can select a maximum of 32 parameters for the drive and save the values to parameters *A2-01 to A2-32*. Use Setup Mode to show the saved parameters. You can immediately access these saved parameters.	Parameters in General-Purpose Setup Mode (Determined by A1-07)	437
A2-33 (0126)	Manual Autoset Parameters	V/f OLV **OLV/PM** AOLV/PM EZOLV Sets the automatic save feature for changes to parameters *A2-17 to A2-32 [MAN2 Param7 to MAN3 Param12]*. 0 : Manual Entry 1 : Auto Save	0 (0, 1)	437

11.4 b: APPLICATION

◆ b1: OPERATION MODE SELECT

No. (Hex.)	Name	Description	Default (Setting Range)	Ref.
b1-01 (0180)	Freq. Ref. Sel. 1	V/f OLV OLV/PM AOLV/PM EZOLV Sets the input method for the frequency reference. 0 : Keypad 1 : Analog Input 2 : Modbus 3 : Option PCB 4 : Pulse Train Input	1 (0 - 4)	444
b1-02 (0181)	Run Comm. Sel 1	V/f OLV OLV/PM AOLV/PM EZOLV Sets the input method for the Run command. 0 : Keypad 1 : Digital Input 2 : Modbus 3 : Option PCB	1 (0 - 3)	446
b1-03 (0182)	Stopping Method Selection	V/f OLV OLV/PM AOLV/PM EZOLV Sets the method to stop the motor after removing a Run command or entering a Stop command. **Note:** When *A1-02 = 5, 6, 8 [Control Method = PM OLVector, PM AOLVector, EZ Vector]*, the setting range is 0, 1, 3. 0 : Ramp->Stop 1 : Coast->Stop 2 : DC Inj->Stop 3 : Timed Coast->Stop 9 : Distance Stop	0 (0 - 3, 9)	446
b1-04 (0183)	Reverse Operation Selection	V/f OLV OLV/PM AOLV/PM EZOLV Sets the reverse operation function. Disable reverse operation in fan or pump applications where reverse rotation is dangerous. 0 : Enabled 1 : Disabled	0 (0, 1)	449
b1-06 (0185)	Double Scan DI Inputs Select	V/f OLV OLV/PM AOLV/PM EZOLV Sets the number of times that the drive reads the sequence input command to prevent malfunction because of noise. 1 : Single Scan 2 : Double Scan	2 (1, 2)	450
b1-07 (0186)	LO/RE Run Selection	V/f OLV OLV/PM AOLV/PM EZOLV Sets drive response to an existing Run command when the drive receives a second Run command from a different location. 1 : Cycle RUN 2 : Accept RUN	1 (1, 2)	450
b1-08 (0187)	RUN@PRG Mode Selection	V/f OLV OLV/PM AOLV/PM EZOLV Sets the conditions for the drive to accept a Run command entered from an external source when using the keypad to set parameters. 1 : NoRUN@Program 2 : RUN@Program 3 : Program@Stop only	1 (1 - 3)	450
b1-14 (01C3)	Phase Order Selection	V/f OLV OLV/PM AOLV/PM EZOLV Sets the phase order for output terminals U/T1, V/T2, and W/T3. This parameter can align the Forward Run command from the drive and the forward direction of the motor without changing wiring. 0 : Standard 1 : Phase Order Switch	0 (0, 1)	451
b1-15 (01C4)	Freq. Ref. Sel. 2	V/f OLV OLV/PM AOLV/PM EZOLV Sets the input method for frequency reference 2. 0 : Keypad 1 : Analog Input 2 : Modbus 3 : Option PCB 4 : Pulse Train Input	0 (0 - 4)	451

No. (Hex.)	Name	Description	Default (Setting Range)	Ref.
b1-16 (01C5)	Run Comm. Sel 2	V/f OLV OLV/PM AOLV/PM EZOLV Sets the input method for Run Command 2 when the user switches the control circuit terminals ON/OFF to change the Run command source. 0 : Keypad 1 : Digital Input 2 : Modbus 3 : Option PCB	0 (0 - 3)	452
b1-17 (01C6)	RUN@PowerUp Selection	V/f OLV OLV/PM AOLV/PM EZOLV Sets drive response when energizing a drive that has an external Run command. Set this parameter in applications where energizing or de-energizing the drive enables the Run command. 1 : Disregard RUN 2 : Accept RUN	1 (1, 2)	453
b1-35 (1117) Expert	DI Deadband Time	V/f OLV OLV/PM AOLV/PM EZOLV Sets the deadband time for MFDIs.	0.0 ms (0.0 to 100.0 ms)	453

◆ b2: DC INJ / SHORT CKT BRAKE

No. (Hex.)	Name	Description	Default (Range)	Ref.
b2-01 (0189)	ZSpd/DCI Threshold	V/f OLV OLV/PM AOLV/PM EZOLV Sets the frequency to start DC Injection Braking or Short Circuit Braking. **Note:** This parameter is available when *b1-03 = 0 [Stopping Method Selection = Ramp->Stop]*.	Determined by A1-02 (0.0 - 10.0 Hz)	454
b2-02 (018A)	DCI Braking Current	V/f OLV OLV/PM AOLV/PM EZOLV Sets the DC Injection Braking current as a percentage of the drive rated current.	50% (0 - 75%)	454
b2-03 (018B)	DCInj Time@Start	V/f OLV OLV/PM AOLV/PM EZOLV Sets the DC Injection Braking Time at stop.	0.00 s (0.00 - 10.00 s)	455
b2-04 (018C)	DCInj Time@Stop	V/f OLV OLV/PM AOLV/PM EZOLV Sets the DC Injection Braking Time at stop.	Determined by A1-02 (0.00 - 10.00 s)	455
b2-08 (0190)	MagFlux Comp Value	V/f OLV OLV/PM AOLV/PM EZOLV Sets how much current the drive injects when DC Injection Braking at Start starts (Initial Excitation) as a percentage of *E2-03 [Mot No-Load Current]*.	0% (0 - 1000%)	455
b2-12 (01BA)	SCB Time@Start	V/f OLV OLV/PM AOLV/PM EZOLV Sets the Short Circuit Braking time at start.	0.00 s (0.00 - 25.50 s)	456
b2-13 (01BB)	SCB Time@Stop	V/f OLV OLV/PM AOLV/PM EZOLV Sets the Short Circuit Braking time at stop.	A1-02 = 8: 0.00 s Other than A1-02 = 8: 0.50 s (0.00 - 25.50 s)	456
b2-18 (0177)	SCB Current	V/f OLV OLV/PM AOLV/PM EZOLV Sets the Short Circuit Braking Current as a percentage of the motor rated current. **Note:** Parameter *A1-02 [Control Method]* selects which parameter is the motor rated current. • *A1-02 = 5, 6 [PM OLVector, PM AOLVector]*: *E5-03 [PM Mot Rated Current (FLA)]* • *A1-02 = 8 [EZ Vector]*: *E9-06 [Motor Rated Current]*	100.0% (0.0 - 200.0%)	456

◆ b3: SPEED SEARCH

No. (Hex.)	Name	Description	Default (Range)	Ref.
b3-01 (0191)	SpSrch@Start Selection	V/f OLV OLV/PM AOLV/PM EZOLV Sets the Speed Search at Start function where the drive will perform Speed Search with each Run command. 0 : Disabled 1 : Enabled	Determined by A1-02 (0, 1)	460
b3-02 (0192)	SpSrch Deactivation Current	V/f OLV OLV/PM AOLV/PM EZOLV Sets the current level that stops Speed Search as a percentage of the drive rated output current. Usually it is not necessary to change this setting.	Determined by A1-02 (0 - 200%)	460

No. (Hex.)	Name	Description	Default (Range)	Ref.
b3-03 (0193)	SpSrch Deceleration Time	V/f OLV OLV/PM AOLV/PM EZOLV Sets the deceleration time during Speed Search operation. Set the length of time to decelerate from the maximum output frequency to the minimum output frequency. **Note:** When *A1-02 = 8 [Control Method = EZ Vector]*, this parameter takes effect only in Expert Mode.	2.0 s (0.1 - 10.0 s)	460
b3-04 (0194)	SpSrch V/F Gain	V/f OLV OLV/PM AOLV/PM EZOLV Sets the ratio used to reduce the V/f during searches to reduce the output current during speed searches.	Determined by o2-04 (10 - 100)	460
b3-05 (0195)	SpSrch Delay Time	V/f OLV OLV/PM AOLV/PM EZOLV Sets the Speed Search delay time to activate a magnetic contactor installed between the drive and motor.	0.2 s (0.0 - 100.0 s)	460
b3-06 (0196) Expert	Speed Curr Lev1 for Estimation	V/f OLV OLV/PM AOLV/PM EZOLV Sets the level of current that flows to the motor during Speed Estimation Speed Search as a coefficient of the motor rated current. Usually it is not necessary to change this setting.	Determined by o2-04 (0.0 - 2.0)	461
b3-07 (0197) Expert	Speed Curr Lev2 for Estimation	V/f OLV OLV/PM AOLV/PM EZOLV Sets the level of current that flows to the motor during Speed Estimation Speed Search as a coefficient of *E2-03 [Mot No-Load Current]* or *E4-03 [M2 No-Load Current]*. Usually it is not necessary to change this setting.	1.0 (0.0 - 3.0)	461
b3-08 (0198) Expert	Speed ACR PGain for Estimation	V/f OLV OLV/PM AOLV/PM EZOLV Sets the proportional gain for the automatic current regulator during Speed Estimation Speed Search. Also adjusts speed search responsiveness. Usually it is not necessary to change this setting.	Determined by A1-02 and o2-04 (0.00 - 6.00)	461
b3-09 (0199) Expert	Speed ACR ITime for Estimation	V/f OLV OLV/PM AOLV/PM EZOLV Sets the integral time for the automatic current regulator during Speed Estimation Speed Search. Also adjusts speed search responsiveness. Usually it is not necessary to change this setting.	Determined by A1-02 (0.0 - 1000.0 ms)	461
b3-10 (019A) Expert	Speed Det Gain for Estimation	V/f OLV OLV/PM AOLV/PM EZOLV Sets the gain to correct estimated frequencies from Speed Estimation Speed Search.	1.05 (1.00 - 1.20)	461
b3-14 (019E)	Speed Bi-Directional Search	V/f OLV OLV/PM AOLV/PM EZOLV Sets the direction of Speed Search to the direction of the frequency reference or in the motor rotation direction as detected by the drive. 0 : Disabled 1 : Enabled **Note:** • When *E9-01 = 0 [Motor Type Selection = IM]* and *A1-02 = 0, 2, or 8 [Control Method = V/f Control, OLVector, or EZ Vector]*, the default settings change when the setting of *b3-24 [SpSrch Method Selection]* changes. –*b3-24 = 1 [Speed Estimation]*: Refer to 403. –*b3-24 = 2 [Current Det2]*: 0 • When *E9-01 = 1 or 2 [PM, SynRM]* and *A1-02 = 0 or 8 [V/f Control, EZ Vector]*, refer to 403. When you set *A1-02*, *b3-24*, and *E9-01*, set *b3-14*.	Determined by A1-02 and b3-24 (0, 1)	461
b3-17 (01F0) Expert	Speed Retry Current Level	V/f OLV OLV/PM AOLV/PM EZOLV Sets the current level for the search retry function in Speed Estimation Speed Search as a percentage where drive rated current is a setting value of 100%.	150% (0 - 200%)	462
b3-18 (01F1) Expert	Speed Retry Delay	V/f OLV OLV/PM AOLV/PM EZOLV Sets the length of time that the drive will wait to retry Speed Estimation Speed Search when too much current flow stopped the Speed Search.	0.10 s (0.00 - 1.00 s)	462
b3-19 (01F2)	Speed Retry Times	V/f OLV OLV/PM AOLV/PM EZOLV Sets the number of times to restart Speed Search if Speed Search does not complete.	3 times (0 - 10 times)	462
b3-24 (01C0)	SpSrch Method Selection	V/f OLV OLV/PM AOLV/PM EZOLV Sets the Speed Search method when you start the motor or when you restore power after a momentary power loss. **Note:** • When *A1-02 = 8 [Control Method = EZ Vector]*, the default setting changes when the setting for *E9-01 [Motor Type Selection]* changes. –E9-01 = 0 [IM]: 2 –E9-01 = 1, 2 [PM, SynRM]: 1 • When you set *b3-24*, it will trigger the drive to initialize *b3-14 [Speed Bi-Directional Search]*. After you set *b3-24*, set *b3-14*. 1 : Speed Estimation 2 : Current Det2	2 (1, 2)	462
b3-25 (01C8) Expert	SpSrch Wait Time	V/f OLV OLV/PM AOLV/PM EZOLV Sets the length of time the drive will wait to start the Speed Search Retry function.	0.5 s (0.0 - 30.0 s)	463
b3-26 (01C7) Expert	Dir. Determ. Level	V/f OLV OLV/PM AOLV/PM EZOLV Sets the level to find the motor rotation direction. Increase the value if the drive cannot find the direction.	1000 (40 to 60000)	463

No. (Hex.)	Name	Description	Default (Range)	Ref.
b3-29 (077C) Expert	SpSrch BackEMF Threshold	V/f OLV **OLV/PM** AOLV/PM EZOLV Sets the induced voltage for motors that use Speed Search. The drive will start Speed Search when the motor induced voltage level is the same as the setting value. Usually it is not necessary to change this setting.	10% (0 - 10%)	463
b3-31 (0BC0) Expert	SpSrch I Ref Level	**V/f OLV** OLV/PM AOLV/PM **EZOLV** Sets the current level that decreases the output current during Current Detection Speed Search.	1.50 (1.50 - 3.50)	463
b3-32 (0BC1) Expert	SpSrch I End Level	**V/f OLV** OLV/PM AOLV/PM **EZOLV** Sets the current level that completes Speed Search.	1.20 (0.00 - 1.49)	463
b3-33 (0B3F) Expert	SpSrch@Uv Selection	**V/f OLV OLV/PM AOLV/PM EZOLV** Sets the function that starts Speed Search at start-up if the drive detects a *Uv [Undervoltage]* when it receives a Run command. 0 : Disabled 1 : Enabled	1 (0, 1)	464
b3-54 (3123)	Search Time	V/f OLV OLV/PM AOLV/PM **EZOLV** Sets the length of time that the drive will run Speed Search.	400 ms (10 - 2000 ms)	464
b3-55 (3124) Expert	Speed Curr Rise Time	V/f OLV OLV/PM AOLV/PM **EZOLV** Sets the length of time that the drive will increase the current from zero current to the setting value of *b3-06 [Speed Curr Lev1 for Estimation]*.	10 ms (10 - 2000 ms)	464
b3-56 (3126)	InverseRotationSearch WaitTime	**V/f OLV** OLV/PM AOLV/PM **EZOLV** Sets the wait time until the drive starts inverse rotation search after it completes forward search when you do inverse rotation search during Current Detection Speed Search.	Determined by o2-04 (0.1 - 5.0 s)	464
b3-61 (1B96) Expert	Magn Pole Find Gain	V/f OLV OLV/PM **AOLV/PM** EZOLV Sets the responsiveness for initial motor magnetic pole calculation when *A1-02 = 6 [Control Method = PM AOLVector]*. Set *b3-61 > 0.0* for an ordinary IPM motor. It is automatically set if High Frequency Injection Tuning is used. **Note:** • Set *n8-35 = 2 [InitRotorPos Selection = HiFreq Injection]* to enable this parameter. • Set *n8-41 [HFI PoleDet Pgain]* to adjust the responsiveness for initial motor magnetic pole calculation when *A1-02 = 5 [PM OLVector]*.	5.0 (-20.0 - +20.0)	464

◆ b4: TIMER

No. (Hex.)	Name	Description	Default (Range)	Ref.
b4-01 (01A3)	Timer ON Time Delay	**V/f OLV OLV/PM AOLV/PM EZOLV** Sets the ON-delay time for the timer input.	0.0 s (0.0 - 3000.0 s)	465
b4-02 (01A4)	Timer OFF Time Delay	**V/f OLV OLV/PM AOLV/PM EZOLV** Sets the OFF-delay time for the timer input.	0.0 s (0.0 - 3000.0 s)	465
b4-03 (0B30) Expert	NO,NC,CM ON-Time Delay	**V/f OLV OLV/PM AOLV/PM EZOLV** Sets the delay time until the contact is turned ON after the function set with *H2-01* turns ON.	0 ms (0 - 65000 ms)	465
b4-04 (0B31) Expert	NO,NC,CM OFF-Time Delay	**V/f OLV OLV/PM AOLV/PM EZOLV** Sets the delay time to deactivate the contact after the function set in *H2-01* deactivates.	0 ms (0 - 65000 ms)	466
b4-05 (0B32) Expert	DO1 ON-Time Delay	**V/f OLV OLV/PM AOLV/PM EZOLV** Sets the delay time to activate the contact after the function set in *H2-02* activates.	0 ms (0 - 65000 ms)	466
b4-06 (0B33) Expert	DO1 OFF-Time Delay	**V/f OLV OLV/PM AOLV/PM EZOLV** Sets the delay time to deactivate the contact after the function set in *H2-02* deactivates.	0 ms (0 - 65000 ms)	466
b4-07 (0B34) Expert	DO2 ON-Time Delay	**V/f OLV OLV/PM AOLV/PM EZOLV** Sets the delay time until the contact is turned ON after the function set with *H2-03* turns ON.	0 ms (0 - 65000 ms)	466
b4-08 (0B35) Expert	DO2 OFF-Time Delay	**V/f OLV OLV/PM AOLV/PM EZOLV** Sets the delay time to deactivate the contact after the function set in *H2-03* deactivates.	0 ms (0 - 65000 ms)	466

◆ b5: PID CONTROL

No. (Hex.)	Name	Description	Default (Range)	Ref.
b5-01 (01A5)	PID Enable	V/f OLV OLV/PM AOLV/PM EZOLV Enables PID control. 0 : Disabled 1 : Enabled	0 (0, 1)	471
b5-70 (01E5)	PID MainRefMode	V/f OLV OLV/PM AOLV/PM EZOLV Sets the PID main reference mode. 0 : PID only 1 : Fref + PID	0 (0, 1)	471
b5-71 (01E6)	PID Fdbk 1/2 Selection	V/f OLV OLV/PM AOLV/PM EZOLV Selects the feedback configuration for PID control. 0 : Feedback 1 1 : Feedback 2	0 (0, 1)	472
b5-72 (01E7)	PID D-FF Mode	V/f OLV OLV/PM AOLV/PM EZOLV Determines whether the D part is in the feedback path or used for feed forward control. 0 : D=Fdback 1 : D=FdFwd	0 (0, 1)	472
b5-02 (01A6) RUN	Proportional Gain (P)	V/f OLV OLV/PM AOLV/PM EZOLV Sets the proportional gain (P) that is applied to PID input.	1.00 (0.00 - 25.00)	472
b5-03 (01A7) RUN	Integral Time (I)	V/f OLV OLV/PM AOLV/PM EZOLV Sets the integral time (I) that is applied to PID input.	1.0 s (0.0 - 360.0 s)	472
b5-04 (01A8) RUN	Integral Limit	V/f OLV OLV/PM AOLV/PM EZOLV Sets the upper limit for integral control (I) as a percentage of the Maximum Output Frequency. **Note:** Parameter *A1-02 [Control Method]* selects which parameter is the maximum output frequency. • *A1-02 ≠ 8 [EZ Vector]*: *E1-04 [Max Output Frequency]* • *A1-02 = 8*: *E9-02 [Maximum Speed]*	100.0% (0.0 - 100.0%)	473
b5-05 (01A9) RUN	Derivative Time (D)	V/f OLV OLV/PM AOLV/PM EZOLV Sets the derivative time (D) for PID control. This parameter adjusts system responsiveness.	0.00 s (0.00 - 10.00 s)	473
b5-06 (01AA) RUN	PID Output Limit	V/f OLV OLV/PM AOLV/PM EZOLV Sets the maximum possible output from the PID controller as a percentage of the Maximum Output Frequency. **Note:** Parameter *A1-02 [Control Method]* selects which parameter is the maximum output frequency. • *A1-02 ≠ 8 [EZ Vector]*: *E1-04 [Max Output Frequency]* • *A1-02 = 8*: *E9-02 [Maximum Speed]*	100.0% (0.0 - 100.0%)	473
b5-07 (01AB) RUN	PID Offset Adjustment	V/f OLV OLV/PM AOLV/PM EZOLV Sets the offset for the PID control output as a percentage of the Maximum Output Frequency. **Note:** Parameter *A1-02 [Control Method]* selects which parameter is the maximum output frequency. • *A1-02 ≠ 8 [EZ Vector]*: *E1-04 [Max Output Frequency]* • *A1-02 = 8*: *E9-02 [Maximum Speed]*	0.0% (-100.0 - +100.0%)	473
b5-08 (01AC) RUN Expert	PID Primary Delay Time Constant	V/f OLV OLV/PM AOLV/PM EZOLV Sets the primary delay time constant for the PID control output. Usually it is not necessary to change this setting.	0.00 s (0.00 - 10.00 s)	473
b5-09 (01AD)	PID Output Level Selection	V/f OLV OLV/PM AOLV/PM EZOLV Sets the polarity of the PID output. 0 : Normal output 1 : Reverse output	0 (0, 1)	473
b5-10 (01AE) RUN	PID Output Gain Setting	V/f OLV OLV/PM AOLV/PM EZOLV Sets the amount of gain to apply to the PID output.	1.00 (0.00 - 25.00)	474
b5-11 (01AF)	PID Output Reverse Selection	V/f OLV OLV/PM AOLV/PM EZOLV Sets the function that enables and disables reverse motor rotation for negative PID control output. 0 : 0 lower limit 1 : Negative lower limit	0 (0, 1)	474

No. (Hex.)	Name	Description	Default (Range)	Ref.
b5-12 (01B0)	Fdback Loss Select Mode	V/f OLV OLV/PM AOLV/PM EZOLV Sets the drive response to PID feedback loss/excess. Sets drive operation after the drive detects PID feedback loss/excess. 0 : DO Only Always 1 : AL+DO Always 2 : FLT+DO Always 3 : DO Only@PID Enable 4 : AL+DO@PID Enable 5 : FLT+DO@PID Enable	0 (0 - 5)	474
b5-13 (01B1)	Fdback Loss Lvl	V/f OLV OLV/PM AOLV/PM EZOLV Sets the level that triggers *PID Feedback Loss [FbL]* detection as a percentage of the Maximum Output Frequency. **Note:** Parameter *A1-02 [Control Method]* selects which parameter is the maximum output frequency. • *A1-02 ≠ 8 [EZ Vector]*: *E1-04 [Max Output Frequency]* • *A1-02 = 8*: *E9-02 [Maximum Speed]*	0% (0 - 100%)	475
b5-14 (01B2)	Fdback Loss Time	V/f OLV OLV/PM AOLV/PM EZOLV Sets the length of time that PID Feedback must be less than *b5-13 [Fdback Loss Lvl]* to detect *PID Feedback Loss [FbL]*.	1.0 s (0.0 - 25.5 s)	475
b5-15 (01B3)	Sleep Start Level	V/f OLV OLV/PM AOLV/PM EZOLV Sets the output level that triggers the PID Sleep function.	Determined by A1-02 (0.0 - 590.0)	475
b5-16 (01B4)	Sleep Delay Time	V/f OLV OLV/PM AOLV/PM EZOLV Sets a delay time to start or stop the PID Sleep function.	0.0 s (0.0 - 25.5 s)	475
b5-17 (01B5) RUN	PID Accel/Decel Time	V/f OLV OLV/PM AOLV/PM EZOLV Raises or lowers the PID setpoint using the acceleration and deceleration times set to the drive. This is a soft-starter for the PID setpoint.	0.0 s (0.0 - 6000.0 s)	475
b5-18 (01DC)	b5-19 PID SP Selection	V/f OLV OLV/PM AOLV/PM EZOLV Sets the function that enables and disables *b5-19 [PID Setpoint Value]*. 0 : Disabled 1 : Enabled	0 (0, 1)	476
b5-19 (01DD) RUN	PID Setpoint Value	V/f OLV OLV/PM AOLV/PM EZOLV Sets the PID setpoint when *b5-18 = 1 [b5-19 PID SP Selection = Enabled]*.	0.00% (0.00 - 100.00%)	476
b5-20 (01E2)	PID Unit Selection	V/f OLV OLV/PM AOLV/PM EZOLV Sets the number of digits to set and show the PID setpoint. 0 : 0.01Hz units 1 : 0.01% units 2 : rpm 3 : User Units	1 (0 - 3)	476
b5-34 (019F) RUN	PID Out Low Limit Level	V/f OLV OLV/PM AOLV/PM EZOLV Sets the output lower limit for the PID control as a percentage of the Maximum Output Frequency. **Note:** Parameter *A1-02 [Control Method]* selects which parameter is the maximum output frequency. • *A1-02 ≠ 8 [EZ Vector]*: *E1-04 [Max Output Frequency]* • *A1-02 = 8*: *E9-02 [Maximum Speed]*	0.0% (-100.0 - +100.0%)	476
b5-35 (01A0) RUN	PID In Hi Limit Level	V/f OLV OLV/PM AOLV/PM EZOLV Sets the output upper limit for the PID control as a percentage of the Maximum Output Frequency. **Note:** Parameter *A1-02 [Control Method]* selects which parameter is the maximum output frequency. • *A1-02 ≠ 8 [EZ Vector]*: *E1-04 [Max Output Frequency]* • *A1-02 = 8*: *E9-02 [Maximum Speed]*	1000.0% (0.0 - 1000.0%)	477
b5-36 (01A1)	PID HiHi Limit Level	V/f OLV OLV/PM AOLV/PM EZOLV Sets the level that triggers *Excessive PID Feedback [FbH]* as a percentage of the Maximum Output Frequency. **Note:** Parameter *A1-02 [Control Method]* selects which parameter is the maximum output frequency. • *A1-02 ≠ 8 [EZ Vector]*: *E1-04 [Max Output Frequency]* • *A1-02 = 8*: *E9-02 [Maximum Speed]*	100% (0 - 100%)	477
b5-37 (01A2)	PID HiHi Time	V/f OLV OLV/PM AOLV/PM EZOLV Sets the length of time that the PID feedback signal must be more than the level set in *b5-36 [PID HiHi Limit Level]* to cause *Excessive PID Feedback [FbH]*.	1.0 s (0.0 - 25.5 s)	477

No. (Hex.)	Name	Description	Default (Range)	Ref.
b5-38 (01FE)	PID SP User Scale for Display	V/f OLV OLV/PM AOLV/PM EZOLV Sets the value that the drive sets or shows as the PID setpoint when at the maximum output frequency.	Determined by b5-20 (1 - 60000)	477
b5-39 (01FF)	PID SP User digits for Display	V/f OLV OLV/PM AOLV/PM EZOLV Sets the number of digits to set and show the PID setpoint. 0 : No Decimal Places 1 : 1 Decimal Place 2 : 2 decimal places 3 : 3 Decimal Places	Determined by b5-20 (0 - 3)	477
b5-40 (017F)	Fref Mon@PID	V/f OLV OLV/PM AOLV/PM EZOLV Sets the contents for monitor *U1-01 [Frequency Reference]* in PID control. 0 : U1-01 with PID Output 1 : U1-01 without PID Output	0 (0, 1)	478
b5-47 (017D)	PID Out Rev Operation Mode	V/f OLV OLV/PM AOLV/PM EZOLV Sets reverse motor rotation when the PID control output is negative. 0 : Lower Limit is Zero 1 : Negative Output Accepted	1 (0, 1)	478
b5-53 (0B8F) RUN	PID I Ramp Limit	V/f OLV OLV/PM AOLV/PM EZOLV Sets the responsiveness of PID control when the PID feedback changes quickly.	0.0 Hz (0.0 - 10.0 Hz)	478
b5-55 (0BE1)	PID Fback Mon Selection	V/f OLV OLV/PM AOLV/PM EZOLV Sets the monitor (*Ux-xx*) used as the PID Feedback. Set the *x-xx* part of the *Ux-xx [Monitor]*.	000 (000 - 999)	479
b5-56 (0BE2)	PID FdbkMon Gain	V/f OLV OLV/PM AOLV/PM EZOLV Sets the gain for the monitor set in *b5-55 [PID Fback Mon Selection]*.	1.00 (0.00 - 10.00)	479
b5-57 (11DD)	PID FdbkMon Bias	V/f OLV OLV/PM AOLV/PM EZOLV Sets the bias for the monitor specified in *b5-55 [PID Fback Mon Selection]*.	0.00 (-10.00 - +10.00)	479
b5-58 to b5-60: (1182 - 1184) RUN	PID Setpoints 2 to 4	V/f OLV OLV/PM AOLV/PM EZOLV Sets the PID setpoint when *H1-xx = 77 or 78 [MFDI Function Selection = PID SP 1, PID SP 2]*. This value is a percentage of the maximum output frequency. **Note:** Parameter *A1-02 [Control Method]* selects which parameter is the maximum output frequency. • *A1-02 ≠ 8 [EZ Vector]*: *E1-04 [Max Output Frequency]* • *A1-02 = 8*: *E9-02 [Maximum Speed]*	0.00% (0.00 - 100.00%)	479
b5-61 (119A)	PID LoLim Select for Trim Mode	V/f OLV OLV/PM AOLV/PM EZOLV Sets the function that adjusts the PID output in relation to the frequency reference. 0 : Disabled 1 : Enabled	0 (0, 1)	479
b5-62 (119B)	PID LoLim Value for Trim Mode	V/f OLV OLV/PM AOLV/PM EZOLV Sets the PID Trim Mode Lower Limit Value as a percentage of the maximum output frequency. **Note:** Parameter *A1-02 [Control Method]* selects which parameter is the maximum output frequency. • *A1-02 ≠ 8 [EZ Vector]*: *E1-04 [Max Output Frequency]* • *A1-02 = 8*: *E9-02 [Maximum Speed]*	0.00% (0.00 - 100.00%)	480
b5-63 (119C)	PID DifFB Mon Selection	V/f OLV OLV/PM AOLV/PM EZOLV Selects the monitor (*Ux-xx*) used as the PID Differential Feedback. Set the *x-xx* part of the *Ux-xx [Monitor]*.	000 (000 - 999)	480
b5-64 (119D)	PID DifFB Mon Gain	V/f OLV OLV/PM AOLV/PM EZOLV Sets the gain for the monitor specified in *b5-63 [PID DifFB Mon Selection]*.	1.00 (0.00 - 10.00)	480
b5-65 (119F)	PID DifFB Mon Bias	V/f OLV OLV/PM AOLV/PM EZOLV Sets the bias for the monitor specified in *b5-63 [PID DifFB Mon Selection]*.	0.00 (-10.00 - +10.00)	480
b5-66 (11DE)	PID Fback Mon Level	V/f OLV OLV/PM AOLV/PM EZOLV Sets the signal level for the monitor specified in *b5-55 [PID Fback Mon Selection]*. 0 : Absolute 1 : Bi-directional (+/-)	0 (0, 1)	480
b5-67 (11DF)	PID DifFB Mon Level	V/f OLV OLV/PM AOLV/PM EZOLV Sets the signal level for the monitor specified in *b5-63 [PID DifFB Mon Selection]*. 0 : Absolute 1 : Bi-directional (+/-)	0 (0, 1)	480
b5-89 (0B89) RUN	Sleep Method Selection	V/f OLV OLV/PM AOLV/PM EZOLV Sets sleep and wake up operation when using PID. 0 : Standard 1 : EZ Sleep/Wake-up	0 (0, 1)	481

No. (Hex.)	Name	Description	Default (Range)	Ref.
b5-90 (0B90)	EZsleep Unit	V/f OLV OLV/PM AOLV/PM EZOLV Sets the measurement units for *b5-91 [EZsleep Min Spd]* and *b5-92 [EZsleep Level]*. 0 : rpm 1 : 0.1Hz units	0 (0, 1)	481
b5-91 (0B91) RUN	EZsleep Min Spd	V/f OLV OLV/PM AOLV/PM EZOLV Sets the minimum speed for the EZ Sleep/Wakeup function. This parameter uses the largest value from *b5-91*, *b5-34 [PID Out Low Limit Level]*, and *d2-02 [FRef Lower Limit]*.	0.0 Hz or 0 min^{-1} (r/min) (0.0 to 590.0 Hz or 0 to 35400 min^{-1} (r/min))	481
b5-92 (0B92) RUN	EZsleep Level	V/f OLV OLV/PM AOLV/PM EZOLV Sets the value that the output frequency or motor speed must be less than for longer than *b5-93 [EZsleep Time]* to enter Sleep Mode.	0.0 Hz or 0 min^{-1} (r/min) (0.0 to 590.0 Hz or 0 to 35400 min^{-1} (r/min))	481
b5-93 (0B93) RUN	EZsleep Time	V/f OLV OLV/PM AOLV/PM EZOLV Sets the length of time that the output frequency or motor speed must be less than *b5-92 [EZsleep Level]* to enter Sleep Mode.	5.0 s (0.0 - 1000.0 s)	481
b5-94 (0B94) RUN	EZsleep Wake Level	V/f OLV OLV/PM AOLV/PM EZOLV Sets the level at which the drive resumes operation when exiting Sleep Mode.	0.00% (0.00 - 600.00%)	481
b5-95 (0B95)	EZsleep Wake Mode	V/f OLV OLV/PM AOLV/PM EZOLV Sets the wake-up mode to use when exiting Sleep Mode. 0 : Setpoint Delta 1 : Absolute	0 (0, 1)	482
b5-96 (0B96) RUN	EZsleep Wake Time	V/f OLV OLV/PM AOLV/PM EZOLV Sets the EZ Wake-up time.	1.0 s (0.0 - 1000.0 s)	482

◆ b6: DWELL FUNCTION

No. (Hex.)	Name	Description	Default (Range)	Ref.
b6-01 (01B6)	Dwell Ref.@Start	V/f OLV OLV/PM AOLV/PM EZOLV Sets the output frequency that the drive will hold momentarily when the motor starts.	0.0 (Determined by A1-02)	482
b6-02 (01B7)	Dwell Time@Start	V/f OLV OLV/PM AOLV/PM EZOLV Sets the length of time that the drive will hold the output frequency when the motor starts.	0.0 s (0.0 - 10.0 s)	483
b6-03 (01B8)	Dwell Ref@Stop	V/f OLV OLV/PM AOLV/PM EZOLV Sets the output frequency that the drive will hold momentarily when ramping to stop the motor.	0.0 (Determined by A1-02)	483
b6-04 (01B9)	Dwell Time@Stop	V/f OLV OLV/PM AOLV/PM EZOLV Sets the length of time for the drive to hold the output frequency when ramping to stop the motor.	0.0 s (0.0 - 10.0 s)	483

◆ b8: ENERGY SAVING

No. (Hex.)	Name	Description	Default (Range)	Ref.
b8-01 (01CC)	eSave Ctrl Selection	V/f OLV OLV/PM AOLV/PM EZOLV Sets the Energy-saving control function. 0 : Disabled 1 : Enabled 2 : Search Enabled **Note:** When *A1-02 = 6 [Control Method = PM AOLVector]*, you can only select setting *2* in Expert Mode.	0 (0 - 2)	483
b8-02 (01CD) RUN Expert	eSave Ctrl Gain	V/f OLV OLV/PM AOLV/PM EZOLV Sets the gain for Energy-saving control.	Determined by A1-02 (0.0 - 10.0)	483
b8-03 (01CE) RUN Expert	eSave Filter Time	V/f OLV OLV/PM AOLV/PM EZOLV Sets the responsiveness for Energy-saving control.	Determined by A1-02 , C6-01 and o2-04 (0.00 - 10.00 s)	484
b8-04 (01CF) Expert	eSave Coef. Value	V/f OLV OLV/PM AOLV/PM EZOLV Sets the Energy-saving control coefficient to maintain maximum motor efficiency. The default setting is for Yaskawa motors.	Determined by C6-01, E2-11, and o2-04 (0.00 - 655.00)	484

No. (Hex.)	Name	Description	Default (Range)	Ref.
b8-05 (01D0) Expert	Power Det.Filter Time	V/f OLV OLV/PM AOLV/PM EZOLV Sets the time constant to measure output power.	20 ms (0 - 2000 ms)	484
b8-06 (01D1) Expert	Srch Op.Volt Limit	V/f OLV OLV/PM AOLV/PM EZOLV Sets the voltage limit for Search Operation as a percentage of the motor rated voltage.	0% (0 - 100%)	484
b8-16 (01F8) Expert	PM eSave Coef.Ki	V/f OLV OLV/PM AOLV/PM EZOLV Sets torque linearity. This parameter uses the Ki value from the motor nameplate. Usually it is not necessary to change this setting.	1.00 (0.00 - 3.00)	484
b8-17 (01F9) Expert	PM eSave Coef.Kt	V/f OLV OLV/PM AOLV/PM EZOLV Sets torque linearity. This parameter uses the Kt value from the motor nameplate. Usually it is not necessary to change this setting.	1.00 (0.00 - 3.00)	485
b8-18 (01FA) Expert	eSave d-Axis Filter Time	V/f OLV OLV/PM AOLV/PM EZOLV Sets the d-axis current reference filter time constant.	0.100 s (0.000 - 5.000 s)	485
b8-19 (0B40) Expert	eSave Search Frequency	V/f OLV OLV/PM AOLV/PM EZOLV Sets the frequency of Energy-saving control search operations. Usually it is not necessary to change this setting.	Determined by A1-02 (10 - 300 Hz)	485
b8-20 (0B41) Expert	PM eSave Width for Test	V/f OLV OLV/PM AOLV/PM EZOLV Sets the amplitude of Energy-saving control search operations.	1.0 degrees (0.1 - 5.0 degrees)	485
b8-21 (0B42) Expert	PM eSave Gain for Test	V/f OLV OLV/PM AOLV/PM EZOLV Sets the gain of Energy-saving control search operations.	0.3Hz (0.1 - 20.0 Hz)	485
b8-22 (0B43) Expert	PM eSave LPF Cutoff Frq	V/f OLV OLV/PM AOLV/PM EZOLV Sets the frequency of the filter used to extract the high-efficiency phase from search operations. Usually it is not necessary to change this setting.	10.0 Hz (1.0 - 30.0 Hz)	486
b8-23 (0B44) Expert	PM eSave Srch Limit	V/f OLV OLV/PM AOLV/PM EZOLV Sets the search operations output limit. Usually it is not necessary to change this setting.	15.0 degrees (0.0 - 30.0 degrees)	486
b8-24 (0B45) Expert	PM eSave HiF Gain for ACR	V/f OLV OLV/PM AOLV/PM EZOLV Sets the gain for high-frequency current control.	200.0 Hz (100.0 - 1000.0 Hz)	486
b8-25 (0B46) Expert	PM eSave Srch Start Level	V/f OLV OLV/PM AOLV/PM EZOLV Sets the start level for search operations.	10.0% (0.0 - 100.0%)	486
b8-26 (0B47) Expert	PM eSave Pwr SP Setpoint	V/f OLV OLV/PM AOLV/PM EZOLV Sets a value to increase torque accuracy.	0.0% (-10.0 - +10.0%)	486
b8-28 (0B8B) Expert	OverExc Action Selection	V/f OLV OLV/PM AOLV/PM EZOLV Sets the function for excitation operation. 0 : Disabled 1 : Enabled	0 (0, 1)	486
b8-29 (0B8C)	eSave Priority Mode	V/f OLV OLV/PM AOLV/PM EZOLV Sets the priority of drive response between changes to the load or Energy-saving control. Enable this to prioritize energy-saving control. Disable this to prioritize tracking related to fast load changes, and prevent motor stall. 0 : Priority: Drive Response 1 : Priority: Energy Savings	0 (0, 1)	486

11.5 C: TUNING

◆ C1: ACCEL / DECEL

No. (Hex.)	Name	Description	Default (Range)	Ref.
C1-01 (0200) RUN	Accel Time 1	V/f OLV OLV/PM AOLV/PM EZOLV Sets the length of time to accelerate from zero to maximum output frequency.	10.0 s (0.0 - 6000.0 s)	489
C1-02 (0201) RUN	Decel Time 1	V/f OLV OLV/PM AOLV/PM EZOLV Sets the length of time to decelerate from maximum output frequency to zero.	10.0 s (0.0 - 6000.0 s)	490
C1-03 (0202) RUN	Accel Time 2	V/f OLV OLV/PM AOLV/PM EZOLV Sets the length of time to accelerate from zero to maximum output frequency.	10.0 s (0.0 - 6000.0 s)	490
C1-04 (0203) RUN	Decel Time 2	V/f OLV OLV/PM AOLV/PM EZOLV Sets the length of time to decelerate from maximum output frequency to zero.	10.0 s (0.0 - 6000.0 s)	490
C1-05 (0204) RUN	Accel Time 3	V/f OLV OLV/PM AOLV/PM EZOLV Sets the length of time to accelerate from zero to maximum output frequency.	10.0 s (0.0 - 6000.0 s)	490
C1-06 (0205) RUN	Decel Time 3	V/f OLV OLV/PM AOLV/PM EZOLV Sets the length of time to decelerate from maximum output frequency to zero.	10.0 s (0.0 - 6000.0 s)	490
C1-07 (0206) RUN	Accel Time 4	V/f OLV OLV/PM AOLV/PM EZOLV Sets the length of time to accelerate from zero to maximum output frequency.	10.0 s (0.0 - 6000.0 s)	490
C1-08 (0207) RUN	Decel Time 4	V/f OLV OLV/PM AOLV/PM EZOLV Sets the length of time to decelerate from maximum output frequency to zero.	10.0 s (0.0 - 6000.0 s)	491
C1-09 (0208) RUN	Fast Stop Time	V/f OLV OLV/PM AOLV/PM EZOLV Sets the length of time that the drive will decelerate to zero for a Fast Stop. **Note:** • Decelerating too quickly can cause an *ov [Overvoltage]* fault that shuts off the drive while the motor to coasts to a stop. Set a Fast Stop time in *C1-09* that prevents motor coasting and makes sure that the motor stops quickly and safely. • When *L2-29 = 1 [KEB Method = Single KEB1 Ride-Thru]* and you do KEB Auto-Tuning, the drive will automatically set *C1-09*. If you must not change the Fast Stop time, do not do KEB Tuning.	10.0 s (0.0 - 6000.0 s)	491
C1-10 (0209)	Ac/Dec Units	V/f OLV OLV/PM AOLV/PM EZOLV Sets the setting units for *C1-01 to C1-08 [Accel Time 1 to Decel Time 4]*, *C1-09 [Fast Stop Time]*, *L2-06 [KEB Decel Time]*, and *L2-07 [KEB Accel Time]*. 0 : 0.01s 1 : 0.1s	1 (0, 1)	491
C1-11 (020A)	Ac/Dec Switch Frequency	V/f OLV OLV/PM AOLV/PM EZOLV Sets the frequency at which the drive will automatically change acceleration and deceleration times.	Determined by A1-02 (0.0 - 590.0 Hz)	491
C1-14 (0264) RUN	Ac/Dec Base Frequency	V/f OLV OLV/PM AOLV/PM EZOLV Sets the base frequency used to calculate acceleration and deceleration rates.	0.0 Hz (0.0 - 590.0 Hz)	492

◆ C2: JERK CONTROL

No. (Hex.)	Name	Description	Default (Range)	Ref.
C2-01 (020B)	Jerk@Start of Accel	V/f OLV OLV/PM AOLV/PM EZOLV Sets the S-curve acceleration time at start.	Determined by A1-02 (0.00 - 10.00 s)	494
C2-02 (020C)	Jerk@End of Accel	V/f OLV OLV/PM AOLV/PM EZOLV Sets the S-curve acceleration time at completion.	0.20 s (0.00 - 10.00 s)	494
C2-03 (020D)	Jerk@Start of Decel	V/f OLV OLV/PM AOLV/PM EZOLV Sets the S-curve deceleration time at start.	0.20 s (0.00 - 10.00 s)	494
C2-04 (020E)	Jerk@End of Decel	V/f OLV OLV/PM AOLV/PM EZOLV Sets the S-curve deceleration time at completion.	0.00 s (0.00 - 10.00 s)	494

◆ C3: SLIP COMPENSATION

No. (Hex.)	Name	Description	Default (Range)	Ref.
C3-01 (020F) RUN	Slip Comp Gain	V/f OLV OLV/PM AOLV/PM EZOLV Sets the gain for the slip compensation function. Usually it is not necessary to change this setting. **Note:** Correctly set these parameters before changing the slip compensation gain: • *E2-01 [Mot Rated Current (FLA)]* • *E2-02 [Mot Rated Slip]* • *E2-03 [Mot No-Load Current]*	Determined by A1-02 (0.0 - 2.5)	494
C3-02 (0210) RUN	Slip Comp Delay Time	V/f OLV OLV/PM AOLV/PM EZOLV Sets the slip compensation delay time when speed is unstable or when the slip compensation response is too slow. Usually it is not necessary to change this setting.	Determined by A1-02 (0 - 10000 ms)	494
C3-03 (0211)	Slip Comp Limit	V/f OLV OLV/PM AOLV/PM EZOLV Sets the upper limit for the slip compensation function as a percentage of the motor rated slip.	200% (0 - 250%)	495
C3-04 (0212)	Slip Comp@Regen	V/f OLV OLV/PM AOLV/PM EZOLV Sets the slip compensation function during regenerative operation. 0 : Disabled 1 : Enable>6 Hz 2 : Enable>C3-15	0 (0 - 2)	495
C3-05 (0213)	Vout Limit Selection	V/f OLV OLV/PM AOLV/PM EZOLV Sets the automatic reduction of motor magnetic flux when the output voltage is saturated. 0 : Disabled 1 : Enabled	0 (0, 1)	495
C3-16 (0261) Expert	Vout Limit Start Level	V/f OLV OLV/PM AOLV/PM EZOLV Sets the modulation factor that starts the output voltage limit operation when *C3-05 = 1 [Vout Limit Selection = Enabled]*.	90.0% (70.0 - 90.0%)	496
C3-17 (0262) Expert	Vout Limit Max Level	V/f OLV OLV/PM AOLV/PM EZOLV Sets the modulation factor used with *C3-18 [Vout Limit Level]* for the output voltage limit operation when *C3-05 = 1 [Vout Limit Selection = Enabled]*.	100.0% (85.0 - 100.0%)	496
C3-18 (0263) Expert	Vout Limit Level	V/f OLV OLV/PM AOLV/PM EZOLV Sets the maximum drop width of the voltage reference when *C3-05 = 1 [Vout Limit Selection = Enabled]*.	90.0% (50.0 - 100.0%)	496
C3-21 (033E) RUN	M2 Slip Comp Gain	V/f OLV OLV/PM AOLV/PM EZOLV Sets the gain for the motor 2 slip compensation function. Usually it is not necessary to change this setting. **Note:** Correctly set these parameters before changing the slip compensation gain: • *E4-01 [M2 Rated Current (FLA)]* • *E4-02 [M2 Rated Slip]* • *E4-03 [M2 No-Load Current]*	Determined by E3-01 (0.0 - 2.5)	496
C3-22 (0241) RUN	M2 Slip Comp DelayTime	V/f OLV OLV/PM AOLV/PM EZOLV Sets the slip compensation delay time for motor 2 when speed is unstable or when the slip compensation response is too slow. Usually it is not necessary to change this setting.	Determined by E3-01 (0 - 10000 ms)	496
C3-23 (0242)	M2 Slip Comp Limit	V/f OLV OLV/PM AOLV/PM EZOLV Sets the upper limit for the slip compensation function as a percentage of the motor 2 rated slip.	200% (0 - 250%)	497
C3-24 (0243)	M2 Slip Comp Regen Condition	V/f OLV OLV/PM AOLV/PM EZOLV Sets the slip compensation during regenerative operation function for motor 2. 0 : Disabled 1 : Enable>6 Hz 2 : Enable>C3-15	0 (0 - 2)	497
C3-29 (1B5D) Expert	Slip Gain@Low Speed	V/f OLV OLV/PM AOLV/PM EZOLV Sets the gain for the slip compensation function in the low speed range. Usually it is not necessary to change this setting.	0.0 (0.0 - 2.5)	497

◆ C4: TORQUE COMPENSATION

No. (Hex.)	Name	Description	Default (Range)	Ref.
C4-01 (0215) RUN	Trq Comp Gain	V/f OLV OLV/PM AOLV/PM EZOLV Sets the gain for the torque compensation function. Use this parameter value for motor 1 when operating multiple motors. **Note:** If *A1-02 = 8 [Control Method = EZ Vector]*, you cannot change the setting while the drive is running.	Determined by A1-02 (0.00 - 2.50)	498
C4-02 (0216) RUN	Trq Comp Delay Time	V/f OLV OLV/PM AOLV/PM EZOLV Sets the torque compensation delay time. Usually it is not necessary to change this setting. **Note:** If *A1-02 = 8 [Control Method = EZ Vector]*, you cannot change the setting while the drive is running.	Determined by A1-02 (0 - 60000 ms)	498
C4-03 (0217)	Trq Comp@FWD Start	V/f OLV OLV/PM AOLV/PM EZOLV Set the amount of torque reference for forward start as a percentage of the motor rated torque.	0.0% (0.0 - 200.0%)	498
C4-04 (0218)	Trq Comp@REV Start	V/f OLV OLV/PM AOLV/PM EZOLV Sets the amount of torque reference for reverse start as a percentage of the motor rated torque.	0.0% (-200.0 - 0.0%)	498
C4-05 (0219)	Trq Comp Time	V/f OLV OLV/PM AOLV/PM EZOLV Sets the starting torque constant to use with *C4-03 and C4-04 [Trq Comp@FWD Start and Trq Comp@REV Start]*.	10 ms (0 - 200 ms)	499
C4-06 (021A)	M2 Trq Comp Delay Time	V/f OLV OLV/PM AOLV/PM EZOLV Sets the value if *ov [Overvoltage]* occurs with sudden changes in the load, at the end of acceleration, or at the start of deceleration.	150 ms (0 - 10000 ms)	499
C4-07 (0341) RUN	M2 Trq Comp Gain	V/f OLV OLV/PM AOLV/PM EZOLV Sets the gain for motor 2 torque compensation function when using the Motor Switch function.	1.00 (0.00 - 2.50)	499
C4-23 (1583) RUN Expert	Current Ctrl Gain	V/f OLV OLV/PM AOLV/PM EZOLV Current control gain. Usually it is not necessary to change this parameter.	1.00 (0.50 - 2.50)	499

◆ C5: ASR - SPEED REGULATION

No. (Hex.)	Name	Description	Default (Range)	Ref.
C5-01 (021B) RUN	ASR PGain 1	V/f OLV OLV/PM AOLV/PM EZOLV Sets the gain to adjust ASR response. **Note:** When *A1-02 = 0 [Control Method = V/f Control]*, set *H6-01 = 3 [PI Pulse Train Function = PG Feedback]* to enable this parameter.	Determined by A1-02 (0.00 - 300.00)	502
C5-02 (021C) RUN	ASR ITime 1	V/f OLV OLV/PM AOLV/PM EZOLV Sets the ASR integral time. **Note:** When *A1-02 = 0 [Control Method = V/f Control]*, set *H6-01 = 3 [PI Pulse Train Function = PG Feedback]* to enable this parameter.	Determined by A1-02 (0.000 - 60.000 s)	502
C5-03 (021D) RUN	ASR PGain 2	V/f OLV OLV/PM AOLV/PM EZOLV Sets the gain to adjust ASR response. **Note:** When *A1-02 = 0 [Control Method = V/f Control]*, set *H6-01 = 3 [PI Pulse Train Function = PG Feedback]* to enable this parameter.	Determined by A1-02 (0.00 - 300.00)	502
C5-04 (021E) RUN	ASR ITime 2	V/f OLV OLV/PM AOLV/PM EZOLV Sets the ASR integral time. **Note:** When *A1-02 = 0 [Control Method = V/f Control]*, set *H6-01 = 3 [PI Pulse Train Function = PG Feedback]* to enable this parameter.	Determined by A1-02 (0.000 - 60.000 s)	502
C5-05 (021F)	ASR Limit	V/f OLV OLV/PM AOLV/PM EZOLV Sets the ASR output limit where *E1-04 [Max Output Frequency]* is 100%. **Note:** When *A1-02 = 0 [Control Method = V/f Control]*, set *H6-01 = 3 [PI Pulse Train Function = PG Feedback]* to enable this parameter.	5.0% (0.0 - 20.0%)	502
C5-06 (0220)	ASR Delay Time	V/f OLV OLV/PM AOLV/PM EZOLV Sets the filter time constant of the torque reference output from the speed loop. Usually it is not necessary to change this setting.	Determined by A1-02 (0.000 - 0.500 s)	503

No. (Hex.)	Name	Description	Default (Range)	Ref.
C5-07 (0221)	ASR Gain Switch Frequency	V/f OLV OLV/PM AOLV/PM EZOLV Sets the frequency where the drive will switch between these parameters: *C5-01 and C5-03 [ASR PGain 1 and ASR PGain 2]* *C5-02 and C5-04 [ASR ITime 1 and ASR ITime 2]*	Determined by A1-02 (Determined by A1-02)	503
C5-08 (0222)	ASR Integral Limit	V/f OLV OLV/PM AOLV/PM EZOLV Set the upper limit of the ASR integral amount as a percentage of the rated load.	400% (0 - 400%)	503
C5-12 (0386)	Integral@Ac/Dec Operation	V/f OLV OLV/PM AOLV/PM EZOLV Sets ASR integral operation during acceleration and deceleration. 0 : Disabled 1 : Enabled **Note:** When *A1-02 = 0 [Control Method = V/f Control]*, set *H6-01 = 3 [PI Pulse Train Function = PG Feedback]* to enable this parameter.	0 (0, 1)	503
C5-29 (0B18) Expert	Speed Ctrl Response Mode	V/f OLV OLV/PM AOLV/PM EZOLV Sets the level of speed control responsiveness. Usually it is not necessary to change this setting. 0 : Standard 1 : High Perf 1	1 (0, 1)	503
C5-39 (030D)	ASR Delay Time 2	V/f OLV OLV/PM AOLV/PM EZOLV Sets the filter time constant used when the torque reference is output from ASR. Usually it is not necessary to change this parameter.	0.000 s (0.000 - 0.500 s)	504

◆ C6: DUTY AND CARRIER

No. (Hex.)	Name	Description	Default (Range)	Ref.
C6-01 (0223)	ND/HD Duty Selection	V/f OLV OLV/PM AOLV/PM EZOLV Sets the drive duty rating. 0 : HD Rating 1 : ND Rating	0 (0, 1)	504
C6-02 (0224)	Carrier Frequency Selection	V/f OLV OLV/PM AOLV/PM EZOLV Sets the carrier frequency for the transistors in the drive. 1 : 2.0 kHz 2 : 5.0 kHz (4.0 kHz for AOLV/PM) 3 : 8.0 kHz (6.0 kHz for AOLV/PM) 4 : 10.0 kHz (8.0 kHz for AOLV/PM) 5 : 12.5 kHz (10.0 kHz for AOLV/PM) 6 : 15.0 kHz (12.0 kHz AOLV/PM) 7 : Swing PWM 1 (Audible Sound 1) 8 : Swing PWM 2 (Audible Sound 2) 9 : Swing PWM 3 (Audible Sound 3) A : Swing PWM 4 (Audible Sound 4) B : Leakage Current Rejection PWM F : User (C6-03 to C6-05) **Note:** The carrier frequency for Swing PWM 1 to 4 is equivalent to 2.0 kHz.	Determined by A1-02, C6-01, and o2-04 (Determined by A1-02)	505
C6-03 (0225)	Carrier Upper Frequency Limit	V/f OLV OLV/PM AOLV/PM EZOLV Sets the upper limit of the carrier frequency. Set *C6-02 = F [Carrier Frequency Selection = User (C6-03 to C6-05)]* to set this parameter.	Determined by C6-02 (1.0 - 15.0 kHz)	506
C6-04 (0226)	Carrier Lower Frequency Limit	V/f OLV OLV/PM AOLV/PM EZOLV Sets the lower limit of the carrier frequency. Set *C6-02 = F [Carrier Frequency Selection = User (C6-03 to C6-05)]* to set this parameter.	Determined by C6-02 (1.0 - 15.0 kHz)	506
C6-05 (0227)	Carrier Freq Proportional Gain	V/f OLV OLV/PM AOLV/PM EZOLV Sets the proportional gain for the carrier frequency. Set *C6-02 = F [Carrier Frequency Selection = User (C6-03 to C6-05)]* to set this parameter.	Determined by C6-02 (0 - 99)	506
C6-09 (022B)	Carrier@Autotune Rotational	V/f OLV OLV/PM AOLV/PM EZOLV Sets the Auto-Tuning carrier frequency. Usually it is not necessary to change this setting. 0 : 5 kHz 1 : use C6-03	0 (0, 1)	507

11.6 d: REFERENCE

◆ d1: FREQUENCY REFERENCE

No. (Hex.)	Name	Description	Default (Range)	Ref.
d1-01 (0280) RUN	Reference 1	V/f OLV **OLV/PM** AOLV/PM EZOLV Sets the frequency reference in the units from *o1-03 [FrqDisplay Unit Selection]*. **Note:** When *A1-02 = 6 [Control Method = PM AOLVector]*, the default setting is *o1-03 = 1 [0.01% (100%=E1-04)]*.	0.00 Hz (0.00 - 590.00 Hz)	510
d1-02 (0281) RUN	Reference 2	V/f OLV **OLV/PM** AOLV/PM EZOLV Sets the frequency reference in the units from *o1-03 [FrqDisplay Unit Selection]*. **Note:** When *A1-02 = 6 [Control Method = PM AOLVector]*, the default setting is *o1-03 = 1 [0.01% (100%=E1-04)]*.	0.00 Hz (0.00 - 590.00 Hz)	510
d1-03 (0282) RUN	Reference 3	V/f OLV **OLV/PM** AOLV/PM EZOLV Sets the frequency reference in the units from *o1-03 [FrqDisplay Unit Selection]*. **Note:** When *A1-02 = 6 [Control Method = PM AOLVector]*, the default setting is *o1-03 = 1 [0.01% (100%=E1-04)]*.	0.00 Hz (0.00 - 590.00 Hz)	511
d1-04 (0283) RUN	Reference 4	V/f OLV **OLV/PM** AOLV/PM EZOLV Sets the frequency reference in the units from *o1-03 [FrqDisplay Unit Selection]*. **Note:** When *A1-02 = 6 [Control Method = PM AOLVector]*, the default setting is *o1-03 = 1 [0.01% (100%=E1-04)]*.	0.00 Hz (0.00 - 590.00 Hz)	511
d1-05 (0284) RUN	Reference 5	V/f OLV **OLV/PM** AOLV/PM EZOLV Sets the frequency reference in the units from *o1-03 [FrqDisplay Unit Selection]*. **Note:** When *A1-02 = 6 [Control Method = PM AOLVector]*, the default setting is *o1-03 = 1 [0.01% (100%=E1-04)]*.	0.00 Hz (0.00 - 590.00 Hz)	511
d1-06 (0285) RUN	Reference 6	V/f OLV **OLV/PM** AOLV/PM EZOLV Sets the frequency reference in the units from *o1-03 [FrqDisplay Unit Selection]*. **Note:** When *A1-02 = 6 [Control Method = PM AOLVector]*, the default setting is *o1-03 = 1 [0.01% (100%=E1-04)]*.	0.00 Hz (0.00 - 590.00 Hz)	511
d1-07 (0286) RUN	Reference 7	V/f OLV **OLV/PM** AOLV/PM EZOLV Sets the frequency reference in the units from *o1-03 [FrqDisplay Unit Selection]*. **Note:** When *A1-02 = 6 [Control Method = PM AOLVector]*, the default setting is *o1-03 = 1 [0.01% (100%=E1-04)]*.	0.00 Hz (0.00 - 590.00 Hz)	511
d1-08 (0287) RUN	Reference 8	V/f OLV **OLV/PM** AOLV/PM EZOLV Sets the frequency reference in the units from *o1-03 [FrqDisplay Unit Selection]*. **Note:** When *A1-02 = 6 [Control Method = PM AOLVector]*, the default setting is *o1-03 = 1 [0.01% (100%=E1-04)]*.	0.00 Hz (0.00 - 590.00 Hz)	512
d1-09 (0288) RUN	Reference 9	V/f OLV **OLV/PM** AOLV/PM EZOLV Sets the frequency reference in the units from *o1-03 [FrqDisplay Unit Selection]*. **Note:** When *A1-02 = 6 [Control Method = PM AOLVector]*, the default setting is *o1-03 = 1 [0.01% (100%=E1-04)]*.	0.00 Hz (0.00 - 590.00 Hz)	512
d1-10 (028B) RUN	Reference 10	V/f OLV **OLV/PM** AOLV/PM EZOLV Sets the frequency reference in the units from *o1-03 [FrqDisplay Unit Selection]*. **Note:** When *A1-02 = 6 [Control Method = PM AOLVector]*, the default setting is *o1-03 = 1 [0.01% (100%=E1-04)]*.	0.00 Hz (0.00 - 590.00 Hz)	512
d1-11 (028C) RUN	Reference 11	V/f OLV **OLV/PM** AOLV/PM EZOLV Sets the frequency reference in the units from *o1-03 [FrqDisplay Unit Selection]*. **Note:** When *A1-02 = 6 [Control Method = PM AOLVector]*, the default setting is *o1-03 = 1 [0.01% (100%=E1-04)]*.	0.00 Hz (0.00 - 590.00 Hz)	512
d1-12 (028D) RUN	Reference 12	V/f OLV **OLV/PM** AOLV/PM EZOLV Sets the frequency reference in the units from *o1-03 [FrqDisplay Unit Selection]*. **Note:** When *A1-02 = 6 [Control Method = PM AOLVector]*, the default setting is *o1-03 = 1 [0.01% (100%=E1-04)]*.	0.00 Hz (0.00 - 590.00 Hz)	512

No. (Hex.)	Name	Description	Default (Range)	Ref.
d1-13 (028E) RUN	Reference 13	V/f OLV OLV/PM AOLV/PM EZOLV Sets the frequency reference in the units from *o1-03 [FrqDisplay Unit Selection]*. **Note:** When *A1-02 = 6 [Control Method = PM AOLVector]*, the default setting is *o1-03 = 1 [0.01% (100%=E1-04)]*.	0.00 Hz (0.00 - 590.00 Hz)	513
d1-14 (028F) RUN	Reference 14	V/f OLV OLV/PM AOLV/PM EZOLV Sets the frequency reference in the units from *o1-03 [FrqDisplay Unit Selection]*. **Note:** When *A1-02 = 6 [Control Method = PM AOLVector]*, the default setting is *o1-03 = 1 [0.01% (100%=E1-04)]*.	0.00 Hz (0.00 - 590.00 Hz)	513
d1-15 (0290) RUN	Reference 15	V/f OLV OLV/PM AOLV/PM EZOLV Sets the frequency reference in the units from *o1-03 [FrqDisplay Unit Selection]*. **Note:** When *A1-02 = 6 [Control Method = PM AOLVector]*, the default setting is *o1-03 = 1 [0.01% (100%=E1-04)]*.	0.00 Hz (0.00 - 590.00 Hz)	513
d1-16 (0291) RUN	Reference 16	V/f OLV OLV/PM AOLV/PM EZOLV Sets the frequency reference in the units from *o1-03 [FrqDisplay Unit Selection]*. **Note:** When *A1-02 = 6 [Control Method = PM AOLVector]*, the default setting is *o1-03 = 1 [0.01% (100%=E1-04)]*.	0.00 Hz (0.00 - 590.00 Hz)	513
d1-17 (0292) RUN	Jog Reference	V/f OLV OLV/PM AOLV/PM EZOLV Sets the Jog frequency reference in the units from *o1-03 [FrqDisplay Unit Selection]*. Set *H1-xx = 6 [MFDI Function Select = Jog Reference]* to use the Jog frequency reference. **Note:** When *A1-02 = 6 [Control Method = PM AOLVector]*, the default setting is *o1-03 = 1 [0.01% (100%=E1-04)]*.	6.00 Hz (0.00 - 590.00 Hz)	513

◆ d2: REFERENCE LIMITS

No. (Hex.)	Name	Description	Default (Range)	Ref.
d2-01 (0289)	FRef Upper Limit	V/f OLV OLV/PM AOLV/PM EZOLV Sets maximum limit for all frequency references. The maximum output frequency is 100%. **Note:** Parameter *A1-02 [Control Method]* selects which parameter is the maximum output frequency. • *A1-02 ≠ 8 [EZ Vector]*: *E1-04 [Max Output Frequency]* • *A1-02 = 8*: *E9-02 [Maximum Speed]*	100.0% (0.0 - 110.0%)	514
d2-02 (028A)	FRef Lower Limit	V/f OLV OLV/PM AOLV/PM EZOLV Sets minimum limit for all frequency references. The maximum output frequency is 100%. **Note:** Parameter *A1-02 [Control Method]* selects which parameter is the maximum output frequency. • *A1-02 ≠ 8 [EZ Vector]*: *E1-04 [Max Output Frequency]* • *A1-02 = 8*: *E9-02 [Maximum Speed]*	0.0% (0.0 - 110.0%)	514
d2-03 (0293)	Analog FRef Lower Limit	V/f OLV OLV/PM AOLV/PM EZOLV Sets the lower limit for the master frequency reference (the first frequency of the multi-step speed reference) as a percentage. The maximum output frequency is 100%. **Note:** Parameter *A1-02 [Control Method]* selects which parameter is the maximum output frequency. • *A1-02 ≠ 8 [EZ Vector]*: *E1-04 [Max Output Frequency]* • *A1-02 = 8*: *E9-02 [Maximum Speed]*	0.0% (0.0 - 110.0%)	514

◆ d3: JUMP FREQUENCY

No. (Hex.)	Name	Description	Default (Range)	Ref.
d3-01 (0294)	Jump Frequency 1	V/f OLV OLV/PM AOLV/PM EZOLV Sets the median value of the frequency band that the drive will avoid.	0.0 Hz (Determined by A1-02)	515
d3-02 (0295)	Jump Frequency 2	V/f OLV OLV/PM AOLV/PM EZOLV Sets the median value of the frequency band that the drive will avoid.	0.0 Hz (Determined by A1-02)	515

No. (Hex.)	Name	Description	Default (Range)	Ref.
d3-03 (0296)	Jump Frequency 3	V/f OLV OLV/PM AOLV/PM EZOLV Sets the median value of the frequency band that the drive will avoid.	0.0 Hz (Determined by A1-02)	515
d3-04 (0297)	Jump Frequency Width	V/f OLV OLV/PM AOLV/PM EZOLV Sets the width of the frequency band that the drive will avoid.	1.0 Hz (Determined by A1-02)	515

◆ d4: FREQUENCY UP/DOWN

No. (Hex.)	Name	Description	Default (Range)	Ref.
d4-01 (0298)	FRef Hold Selection	V/f OLV OLV/PM AOLV/PM EZOLV Sets the function that saves the frequency reference or the frequency bias (Up/Down 2) after a Stop command or when de-energizing the drive. Set *H1-xx: MFDI Function Select* to one of these values to enable this parameter: • *17 [Ac/Dec Hold]* • *62/63 [Up Command/Down Command]* • *65/66 [Up2 Command/Dw2 Command]* 0 : Disabled 1 : Enabled	0 (0, 1)	516
d4-03 (02AA) RUN	Up/Dw2 Bias Step Frequency	V/f OLV OLV/PM AOLV/PM EZOLV Sets the bias that the Up/Down 2 function adds to or subtracts from the frequency reference.	0.00 Hz (0.00 - 99.99 Hz)	518
d4-04 (02AB) RUN	Up/Dw2 Ramp Selection	V/f OLV OLV/PM AOLV/PM EZOLV Sets the acceleration and deceleration times for the Up/Down 2 function to apply the bias to the frequency reference. 0 : Current Ac/Dec Time 1 : Ac/Dec 4	0 (0, 1)	518
d4-05 (02AC) RUN	Up/Dw2 Bias Mode Selection	V/f OLV OLV/PM AOLV/PM EZOLV Sets the function that saves the bias value to the drive when you open or close the two *Up2 Command, Dw2 Command [H1-xx = 65, 66]*. Set *d4-03 [Up/Dw2 Bias Step Frequency] = 0.00* before you set this parameter. 0 : Hold@Up=Dw=0 1 : Reset@Up=Dw	0 (0, 1)	519
d4-06 (02AD)	FRef Bias(Up/Dw2)	V/f OLV OLV/PM AOLV/PM EZOLV Saves the bias value from the Up/Down 2 Command where the Maximum Output Frequency is 100%. **Note:** Parameter *A1-02 [Control Method]* selects which parameter is the maximum output frequency. • *A1-02 ≠ 8 [EZ Vector]*: *E1-04 [Max Output Frequency]* • *A1-02 = 8*: *E9-02 [Maximum Speed]*	0.0% (-99.9 - +100.0%)	519
d4-07 (02AE) RUN	Analog FRef Fluctuate Limit	V/f OLV OLV/PM AOLV/PM EZOLV If the frequency reference changes for more than the level set to this parameter, then the bias value will be held. The value is set as a percentage of the Maximum Output Frequency. **Note:** Parameter *A1-02 [Control Method]* selects which parameter is the maximum output frequency. • *A1-02 ≠ 8 [EZ Vector]*: *E1-04 [Max Output Frequency]* • *A1-02 = 8*: *E9-02 [Maximum Speed]*	1.0% (0.1 - 100.0%)	519
d4-08 (02AF) RUN	Up/Dw2 Bias Upper Limit	V/f OLV OLV/PM AOLV/PM EZOLV Sets the upper limit of the Up/Down 2 bias as a percentage of the Maximum Output Frequency. **Note:** Parameter *A1-02 [Control Method]* selects which parameter is the maximum output frequency. • *A1-02 ≠ 8 [EZ Vector]*: *E1-04 [Max Output Frequency]* • *A1-02 = 8*: *E9-02 [Maximum Speed]*	100.0% (0.0 - 100.0%)	520
d4-09 (02B0) RUN	Up/Dw2 Bias Lower Limit	V/f OLV OLV/PM AOLV/PM EZOLV Sets the lower limit of the Up/Down 2 bias as a percentage of the Maximum Output Frequency. **Note:** Parameter *A1-02 [Control Method]* selects which parameter is the maximum output frequency. • *A1-02 ≠ 8 [EZ Vector]*: *E1-04 [Max Output Frequency]* • *A1-02 = 8*: *E9-02 [Maximum Speed]*	0.0% (-99.9 - 0.0%)	520
d4-10 (02B6)	Up/Dw Frq Low Limit Select	V/f OLV OLV/PM AOLV/PM EZOLV Sets the lower frequency limit for the Up/Down function. 0 : d2-02/Analog (larger level) 1 : d2-02	0 (0, 1)	520

No. (Hex.)	Name	Description	Default (Range)	Ref.
d4-11 (02B7)	Bi-Dir Out Selection	V/f OLV OLV/PM AOLV/PM EZOLV Sets the function that changes the frequency reference to a Bi-Directional internal frequency reference. 0 : Disabled 1 : Enabled	0 (0, 1)	520
d4-12 (02B8)	Stop Position Gain	V/f OLV OLV/PM AOLV/PM EZOLV Sets the gain to adjust the stopping accuracy. Set this parameter when *b1-03 = 9 [Stopping Method Selection = Distance Stop]*.	1.00 (0.50 - 2.55)	521

◆ d6: FIELD WEAKENING / FORCING

No. (Hex.)	Name	Description	Default (Range)	Ref.
d6-01 (02A0)	Field Weak Level	V/f OLV OLV/PM AOLV/PM EZOLV Sets the drive output voltage as a percentage of *E1-05 [Field Force Selection]* when *H1-xx = 44 [Field weakening]* is activated.	80% (0 - 100%)	522
d6-02 (02A1)	Field Weak FqLimit	V/f OLV OLV/PM AOLV/PM EZOLV Sets the minimum output frequency to start field weakening.	0.0 Hz (0.0 - 590.0 Hz)	522
d6-03 (02A2)	Field Force Selection	V/f OLV OLV/PM AOLV/PM EZOLV Sets the field forcing function. 0 : Disabled 1 : Enabled	0 (0, 1)	522
d6-06 (02A5)	Field Force Limit	V/f OLV OLV/PM AOLV/PM EZOLV Sets the limit value for field forcing to increase the motor excitation current reference as a percentage of *E2-03 [Mot No-Load Current]*. Usually it is not necessary to change this setting.	400% (100 - 400%)	522

◆ d7: OFFSET FREQUENCY

No. (Hex.)	Name	Description	Default (Range)	Ref.
d7-01 (02B2) RUN	Offset Frq 1	V/f OLV OLV/PM AOLV/PM EZOLV Uses *H1-xx = 0E [MFDI Function Select = Offset Frq 1]* as a percentage of the Maximum Output Frequency to add or subtract the set frequency to/from the frequency reference. **Note:** Parameter *A1-02 [Control Method]* selects which parameter is the maximum output frequency. • *A1-02 ≠ 8 [EZ Vector]*: *E1-04 [Max Output Frequency]* • *A1-02 = 8*: *E9-02 [Maximum Speed]*	0.0% (-100.0 - +100.0%)	523
d7-02 (02B3) RUN	Offset Frq 2	V/f OLV OLV/PM AOLV/PM EZOLV Uses *H1-xx = 0F [MFDI Function Select = Offset Frq 2]* as a percentage of the Maximum Output Frequency to add or subtract the set frequency to/from the frequency reference. **Note:** Parameter *A1-02 [Control Method]* selects which parameter is the maximum output frequency. • *A1-02 ≠ 8 [EZ Vector]*: *E1-04 [Max Output Frequency]* • *A1-02 = 8*: *E9-02 [Maximum Speed]*	0.0% (-100.0 - +100.0%)	523
d7-03 (02B4) RUN	Offset Frq 3	V/f OLV OLV/PM AOLV/PM EZOLV Uses *H1-xx = 10 [MFDI Function Select = Offset Frq 3]* as a percentage of the Maximum Output Frequency to add or subtract the set frequency to/from the frequency reference. **Note:** Parameter *A1-02 [Control Method]* selects which parameter is the maximum output frequency. • *A1-02 ≠ 8 [EZ Vector]*: *E1-04 [Max Output Frequency]* • *A1-02 = 8*: *E9-02 [Maximum Speed]*	0.0% (-100.0 - +100.0%)	523

11.7 E: MOTOR

◆ E1: V/F PARAMETER MOTOR 1

No. (Hex.)	Name	Description	Default (Range)	Ref.
E1-01 (0300)	Input AC Supply Voltage	V/f OLV OLV/PM AOLV/PM EZOLV Sets the drive input voltage. **NOTICE:** *Set parameter E1-01 to align with the drive input voltage (not motor voltage). If this parameter is incorrect, the protective functions of the drive will not operate correctly and it can cause damage to the drive.*	200 V Class: 230 V, 400 V: 400 V (200 V Class: 155 to 255 V, 400 V Class: 310 to 510 V)	525
E1-03 (0302)	V/f Pattern Selection	V/f OLV OLV/PM AOLV/PM EZOLV Sets the V/f pattern for the drive and motor. You can use one of the preset patterns or you can make a custom pattern. 0 : CT_50-50Hzmax 1 : CT_60-60Hzmax 2 : CT_50-60Hzmax 3 : CT_60-72Hzmax 4 : VT_50-35HzmidV 5 : VT_50-50HzmidV 6 : VT_60-35HzmidV 7 : VT_60-50HzmidV 8 : HT_50Hz_125 V 9 : HTrq50Hz-165 V A : HTrq60Hz-125V B : HT_60Hz-165V C : HF_60-90Hzmax D : HF_60-120Hzmax E : HF_60-180Hzmax F : Custom **Note:** • When *A1-02 = 2 [Control Method = OLVector]*, settings *0* to *E* are not available. • Set the correct V/f pattern for the application and operation area. An incorrect V/f pattern can decrease motor torque and increase current from overexcitation.	F (Determined by A1-02)	525
E1-04 (0303)	Max Output Frequency	V/f OLV OLV/PM AOLV/PM EZOLV Sets the maximum output frequency for the V/f pattern.	Determined by A1-02 and E5-01 (Determined by A1-02 and E5-01)	530
E1-05 (0304)	Max Output Voltage	V/f OLV OLV/PM AOLV/PM EZOLV Sets the maximum output voltage for the V/f pattern.	200.0 (200 V Class: 0.0 - 255.0 V, 400 V Class: 0.0 - 510.0 V)	530
E1-06 (0305)	Base Frequency	V/f OLV OLV/PM AOLV/PM EZOLV Sets the base frequency for the V/f pattern.	Determined by A1-02 and E5-01 (0.0 - E1-04)	530
E1-07 (0306)	Mid A Frequency	V/f OLV OLV/PM AOLV/PM EZOLV Sets a middle output frequency for the V/f pattern.	Determined by A1-02 (0.0 - E1-04)	530
E1-08 (0307)	Mid A Voltage	V/f OLV OLV/PM AOLV/PM EZOLV Sets a middle output voltage for the V/f pattern.	Determined by A1-02 , C6-01 and o2-04 (200 V Class: 0.0 - 255.0 V, 400 V Class: 0.0 - 510.0 V)	531
E1-09 (0308)	Min Output Frequency	V/f OLV OLV/PM AOLV/PM EZOLV Sets the minimum output frequency for the V/f pattern.	Determined by A1-02 and E5-01 (Determined by A1-02, E1-04, and E5-01)	531
E1-10 (0309)	Min Output Voltage	V/f OLV OLV/PM AOLV/PM EZOLV Sets the minimum output voltage for the V/f pattern.	Determined by A1-02 (200 V Class: 0.0 to 255.0 V, 400 V Class: 0.0 to 510.0 V)	531
E1-11 (030A) Expert	Mid B Frequency	V/f OLV OLV/PM AOLV/PM EZOLV Sets a middle output frequency for the V/f pattern.	0.0 Hz (0.0 - E1-04)	531

No. (Hex.)	Name	Description	Default (Range)	Ref.
E1-12 (030B) Expert	Min Output Voltage	V/f OLV OLV/PM AOLV/PM EZOLV Sets a middle point voltage for the V/f pattern.	0.0 V (200 V Class: 0.0 to 255.0 V, 400 V Class: 0.0 to 510.0 V)	531
E1-13 (030C) Expert	Base Voltage	V/f OLV OLV/PM AOLV/PM EZOLV Sets the base voltage for the V/f pattern.	0.0 V (200 V Class: 0.0 - 255.0 V,400 V Class: 0.0 - 510.0 V)	531

◆ E2: MOTOR 1 PARAMETERS

No. (Hex.)	Name	Description	Default (Range)	Ref.
E2-01 (030E)	Mot Rated Current (FLA)	V/f OLV OLV/PM AOLV/PM EZOLV Sets the motor rated current in amps.	Determined by o2-04, C6-01 (10% to 200% of the drive rated current)	532
E2-02 (030F)	Mot Rated Slip	V/f OLV OLV/PM AOLV/PM EZOLV Sets motor rated slip.	Determined by o2-04, C6-01 (0.000 - 20.000 Hz)	532
E2-03 (0310)	Mot No-Load Current	V/f OLV OLV/PM AOLV/PM EZOLV Sets the no-load current for the motor in amps when operating at the rated frequency and the no-load voltage.	Determined by o2-04, C6-01 (0 to E2-01)	532
E2-04 (0311)	Motor Pole Count	V/f OLV OLV/PM AOLV/PM EZOLV Sets the number of motor poles. **Note:** • When *A1-02 = 0 [Control Method = V/f Control]*, the maximum value is 120. • When *A1-02 = 2 [OLVector]*, the maximum value is 48.	4 (2 - 120)	533
E2-05 (0312)	Motor L-L Resistance	V/f OLV OLV/PM AOLV/PM EZOLV Sets the line-to-line resistance for the motor stator windings.	Determined by o2-04, C6-01 (0.000 - 65.000 Ω)	533
E2-06 (0313)	Motor Leak Inductance	V/f OLV OLV/PM AOLV/PM EZOLV Sets the voltage drop from motor leakage inductance when the motor is operating at the rated frequency and rated current. This value is a percentage of Motor Rated Voltage.	Determined by o2-04, C6-01 (0.0 - 60.0%)	533
E2-07 (0314)	Mot Sat Coeff 1	V/f OLV OLV/PM AOLV/PM EZOLV Sets the motor iron-core saturation coefficient at 50% of the magnetic flux.	0.50 (0.00 - 0.50)	533
E2-08 (0315)	Mot Sat Coeff 2	V/f OLV OLV/PM AOLV/PM EZOLV Sets the motor iron-core saturation coefficient at 75% of the magnetic flux.	0.75 (E2-07 - 0.75)	533
E2-09 (0316) Expert	Motor Mech Loss	V/f OLV OLV/PM AOLV/PM EZOLV Sets the mechanical loss of the motor. It is set as a percentage of *E2-11 [Motor Rated Power (kW)]*. Usually it is not necessary to change this setting.	0.0% (0.0 - 10.0%)	534
E2-10 (0317)	Motor Iron Loss	V/f OLV OLV/PM AOLV/PM EZOLV Sets the motor iron loss.	Determined by o2-04, C6-01 (0 - 65535 W)	534
E2-11 (0318)	Motor Rated Power (kW)	V/f OLV OLV/PM AOLV/PM EZOLV Sets the motor rated output in the units from *o1-58 [Mot Capacity Unit]*.	Determined by o2-04, C6-01 (0.00 - 650.00 kW)	534

◆ E3: V/F PARAMETER MOTOR 2

No. (Hex.)	Name	Description	Default (Range)	Ref.
E3-01 (0319)	M2 Control Method Selection	V/f OLV OLV/PM AOLV/PM EZOLV Sets the control method for motor 2. **Note:** When you change this setting, the drive will set all parameters that are dependent on this parameter to their default settings. 0 : V/f Control 2 : OLVector	0 (0, 2)	535
E3-04 (031A)	M2 Max Out Frequency	V/f OLV OLV/PM AOLV/PM EZOLV Set the maximum output frequency for the motor 2 V/f pattern.	Determined by E3-01 (40.0 - 590.0 Hz)	535
E3-05 (031B)	M2 Max Out Voltage	V/f OLV OLV/PM AOLV/PM EZOLV Sets the maximum output voltage for the motor 2 V/f pattern.	Determined by E3-01 (200 V Class: 0.0 - 255.0 V, 400 V Class: 0.0 - 510.0 V)	535

No. (Hex.)	Name	Description	Default (Range)	Ref.
E3-06 (031C)	M2 Base Frequency	V/f OLV OLV/PM AOLV/PM EZOLV Sets the base frequency for the motor 2 V/f pattern.	Determined by E3-01 (0.0 - E3-04)	535
E3-07 (031D)	M2 Mid A Frequency	V/f OLV OLV/PM AOLV/PM EZOLV Sets a middle output frequency for the motor 2 V/f pattern.	Determined by E3-01 (0.0 - E3-04)	535
E3-08 (031E)	M2 Mid A Voltage	V/f OLV OLV/PM AOLV/PM EZOLV Sets a middle output voltage for the motor 2 V/f pattern.	Determined by E3-01 (200 V Class: 0.0 - 255.0 V, 400 V Class: 0.0 - 510.0 V)	535
E3-09 (031F)	M2 Min Out Frequency	V/f OLV OLV/PM AOLV/PM EZOLV Sets the minimum output frequency for the motor 2 V/f pattern.	Determined by E3-01 (0.0 - E3-04)	535
E3-10 (0320)	M2 Min Out Voltage	V/f OLV OLV/PM AOLV/PM EZOLV Sets the minimum output voltage for the motor 2 V/f pattern.	Determined by E3-01 (200 V Class: 0.0 - 255.0 V, 400 V Class: 0.0 - 510.0 V)	535
E3-11 (0345) Expert	M2 Mid B Frequency	V/f OLV OLV/PM AOLV/PM EZOLV Sets a middle output frequency for the motor 2 V/f pattern. Set this parameter to adjust the V/f pattern for the constant output range. Usually it is not necessary to change this parameter.	0.0 Hz (0.0 - E3-04)	536
E3-12 (0346) Expert	M2 Min Out Voltage	V/f OLV OLV/PM AOLV/PM EZOLV Sets a middle output voltage for the motor 2 V/f pattern. Set this parameter to adjust the V/f pattern for the constant output range. Usually it is not necessary to change this parameter.	0.0 V (200 V Class: 0.0 to 255.0 V, 400 V Class: 0.0 to 510.0 V)	536
E3-13 (0347) Expert	M2 Base Voltage	V/f OLV OLV/PM AOLV/PM EZOLV Sets the base voltage for the motor 2 V/f pattern. Set this parameter to adjust the V/f pattern for the constant output range. Usually it is not necessary to change this parameter.	0.0 V (200 V Class: 0.0 to 255.0 V, 400 V Class: 0.0 to 510.0 V)	536

◆ E4: MOTOR 2 PARAMETERS

No. (Hex.)	Name	Description	Default (Range)	Ref.
E4-01 (0321)	M2 Rated Current (FLA)	V/f OLV OLV/PM AOLV/PM EZOLV Sets the motor rated current for motor 2 in amps.	Determined by o2-04, C6-01 (10% to 200% of the drive rated current)	536
E4-02 (0322)	M2 Rated Slip	V/f OLV OLV/PM AOLV/PM EZOLV Sets the motor rated slip for motor 2.	Determined by o2-04, C6-01 (0.000 - 20.000 Hz)	537
E4-03 (0323)	M2 No-Load Current	V/f OLV OLV/PM AOLV/PM EZOLV Sets the no-load current for motor 2 in amps when operating at the rated frequency and the no-load voltage.	Determined by o2-04, C6-01 (0 to E4-01)	537
E4-04 (0324)	M2 Pole Count	V/f OLV OLV/PM AOLV/PM EZOLV Sets the number of poles for motor 2.	4 (2 - 120)	537
E4-05 (0325)	M2 L-L Resistance	V/f OLV OLV/PM AOLV/PM EZOLV Sets the line-to-line resistance for the motor 2 stator windings.	Determined by o2-04, C6-01 (0.000 - 65.000 Ω)	537
E4-06 (0326)	M2 Leak Inductance	V/f OLV OLV/PM AOLV/PM EZOLV Sets the voltage drop from motor 2 leakage inductance as a percentage of Motor Rated Voltage when motor 2 operates at the rated frequency and rated current.	Determined by o2-04, C6-01 (0.0 - 60.0%)	538
E4-07 (0343)	M2 Satur Coeff 1	V/f OLV OLV/PM AOLV/PM EZOLV Sets the motor 2 iron-core saturation coefficient at 50% of the magnetic flux.	0.50 (0.00 - 0.50)	538
E4-08 (0344)	M2 Satur Coeff 2	V/f OLV OLV/PM AOLV/PM EZOLV Sets the motor 2 iron-core saturation coefficient at 75% of the magnetic flux.	0.75 (E4-07 - 0.75)	538
E4-09 (033F) Expert	M2 Mech Loss	V/f OLV OLV/PM AOLV/PM EZOLV Sets the mechanical loss of motor 2. It is set as a percentage of *E4-11 [M2 Rated Power (kW)]*. Usually it is not necessary to change this setting.	0.0% (0.0 - 10.0%)	538
E4-10 (0340)	M2 Iron Loss	V/f OLV OLV/PM AOLV/PM EZOLV Sets the motor iron loss for motor 2.	Determined by o2-04, C6-01 (0 - 65535 W)	538
E4-11 (0327)	M2 Rated Power (kW)	V/f OLV OLV/PM AOLV/PM EZOLV Sets the motor rated power in the units from *o1-58 [Mot Capacity Unit]*.	Determined by o2-04, C6-01 (0.00 - 650.00 kW)	538

◆ E5: PM MOTOR SETTINGS

No. (Hex.)	Name	Description	Default (Range)	Ref.
E5-01 (0329)	PM Mot Code Selection	V/f OLV **OLV/PM** AOLV/PM EZOLV Sets the motor code for Yaskawa PM motors. The drive uses the motor code to automatically set some parameters to their correct settings.	FFFF (0000 - FFFF)	539
E5-02 (032A)	PM Mot Rated Power (kW)	V/f OLV **OLV/PM** AOLV/PM EZOLV Sets the PM motor rated output in the units from *o1-58 [Mot Capacity Unit]*.	Determined by o2-04, C6-01 (0.10 - 30.00 kW)	539
E5-03 (032B)	PM Mot Rated Current (FLA)	V/f OLV **OLV/PM** AOLV/PM EZOLV Sets the PM motor rated current (FLA).	Determined by o2-04, C6-01 (10% to 200% of the drive rated current)	539
E5-04 (032C)	PM Mot Pole Count	V/f OLV **OLV/PM** AOLV/PM EZOLV Sets the number of PM motor poles. **Note:** When *A1-02 = 5, 6 or 8 [OLV/PM, AOLV/PM or EZOLV]*, the maximum value is 48.	4 (2 - 120)	540
E5-05 (032D)	PM Mot Resistance (Ohms/Phase)	V/f OLV **OLV/PM** AOLV/PM EZOLV Sets the resistance per phase of a PM motor. Set 50% of the line-to-line resistance.	0.100 Ω (0.000 - 65.000 Ω)	540
E5-06 (032E)	PM d-Axis Inductance (mH/Phase)	V/f OLV **OLV/PM** AOLV/PM EZOLV Sets the PM motor d-axis inductance.	1.00 mH (0.00 - 300.00 mH)	540
E5-07 (032F)	PM q-Axis Inductance (mH/Phase)	V/f OLV **OLV/PM** AOLV/PM EZOLV Sets the PM motor q-axis inductance.	1.00 mH (0.00 - 600.00 mH)	540
E5-09 (0331)	PM BackEMF Vpeak (mV/(rad/ s))	V/f OLV **OLV/PM** AOLV/PM EZOLV Sets the peak value of PM motor induced voltage.	0.0 mV/(rad/sec) (0.0 - 2000.0 mV/(rad/s))	540
E5-24 (0353)	PM BackEMF L-L Vrms (mV/rpm)	V/f OLV **OLV/PM** AOLV/PM EZOLV Sets the RMS value for PM motor line voltage.	200 V class: 100.0 mV/ min^{-1} 400 V class: 200.0 mV/ min^{-1} (0.0 - 6500.0 mV/min^{-1})	541
E5-25 (035E) Expert	Polar Est Timeout	V/f OLV **OLV/PM** AOLV/PM EZOLV Sets the function that switches polarity for initial polarity estimation. Usually it is not necessary to change this setting. 0 : Disabled 1 : Enabled	0 (0, 1)	541

◆ E9: SIMPLE VECTOR SETTINGS

No. (Hex.)	Name	Description	Default (Range)	Ref.
E9-01 (11E4)	Motor Type Selection	V/f OLV OLV/PM AOLV/PM **EZOLV** Sets the type of motor. 0 : IM 1 : PM 2 : SynRM	0 (0 to 2)	541
E9-02 (11E5)	Maximum Speed	V/f OLV OLV/PM AOLV/PM **EZOLV** Sets the maximum speed of the motor.	Determined by E9-01 (40.0 - 120.0 Hz)	541
E9-03 (11E6)	Rated Speed	V/f OLV OLV/PM AOLV/PM **EZOLV** Sets the rated rotation speed of the motor.	Determined by E9-01 (100 - 7200 min^{-1})	542
E9-04 (11E7)	Base Frequency	V/f OLV OLV/PM AOLV/PM **EZOLV** Sets the rated frequency of the motor.	Determined by E9-01 (40.0 - 120.0 Hz)	542
E9-05 (11E8)	Base Voltage	V/f OLV OLV/PM AOLV/PM **EZOLV** Sets the rated voltage of the motor.	200 V Class: 200.0 V, 400 V: 400.0 V (200 V Class: 0.0 - 255.0 V,400 V Class: 0.0 - 510.0 V)	542
E9-06 (11E9)	Motor Rated Current	V/f OLV OLV/PM AOLV/PM **EZOLV** Sets the motor rated current in amps.	Determined by E9-01 and o2-04 (10% to 200% of the drive rated current)	542
E9-07 (11EA)	Motor Rated Power (kW)	V/f OLV OLV/PM AOLV/PM **EZOLV** Sets the motor rated output in the units from *o1-58 [Mot Capacity Unit]*.	Determined by E9-02 and o2-04 (0.00 - 650.00 kW)	542
E9-08 (11EB)	Motor Pole Count	V/f OLV OLV/PM AOLV/PM **EZOLV** Sets the number of motor poles.	4 (2 to 120)	542

No. (Hex.)	Name	Description	Default (Range)	Ref.
E9-09 (11EC)	Motor Rated Slip	V/f OLV OLV/PM AOLV/PM EZOLV Sets the motor rated slip.	0.000 Hz (0.000 - 20.000 Hz)	543
E9-10 (11ED)	Motor L-L Resistance	V/f OLV OLV/PM AOLV/PM EZOLV Sets the line-to-line resistance for the motor stator windings.	Determined by o2-04 (0.000 - 65.000 Ω)	543

11.8 F: OPTIONS

◆ F1: ENCODER

No. (Hex.)	Name	Description	Default (Range)	Ref.
F1-02 (0381)	PGOpen Detection Select	V/f OLV OLV/PM AOLV/PM EZOLV Sets the method to stop the motor or let the motor continue operating when the drive detects *PGo [Encoder (PG) Feedback Loss]*. 0 : Ramp->Stop 1 : Coast->Stop 2 : Fast Stop (C1-09) 3 : Alarm Only 4 : No Alarm Display **Note:** When *A1-02 = 0 [Control Method = V/f Control]*, set *H6-01 = 3 [PI Pulse Train Function = PG Feedback]* to enable this parameter.	1 (0 - 4)	544
F1-03 (0382)	Overspeed Detection Selection	V/f OLV OLV/PM AOLV/PM EZOLV Sets the method to stop the motor or let the motor continue to operate when the drive detects *oS [Overspeed]*. 0 : Ramp->Stop 1 : Coast->Stop 2 : Fast Stop (C1-09) 3 : Alarm Only **Note:** When *A1-02 = 0 [Control Method = V/f Control]*, set *H6-01 = 3 [PI Pulse Train Function = PG Feedback]* to enable this parameter.	1 (0 - 3)	544
F1-04 (0383)	Speed Dev Detection Select	V/f OLV OLV/PM AOLV/PM EZOLV Sets the method to stop the motor or let the motor continue to operate when the drive detects *dEv [Speed Deviation]*. 0 : Ramp->Stop 1 : Coast->Stop 2 : Fast Stop (C1-09) 3 : Alarm Only **Note:** When *A1-02 = 0 [Control Method = V/f Control]*, set *H6-01 = 3 [PI Pulse Train Function = PG Feedback]* to enable this parameter.	3 (0 - 3)	545
F1-08 (0387)	Overspeed Level	V/f OLV OLV/PM AOLV/PM EZOLV Sets the detection level of *oS [Overspeed]* as a percentage when the maximum output frequency is 100%. **Note:** • Parameter *A1-02 [Control Method]* selects which parameter is the maximum output frequency. –*A1-02 ≠ 8 [EZ Vector]*: *E1-04 [Max Output Frequency]* –*A1-02 = 8*: *E9-02 [Maximum Speed]* • When *A1-02 = 0 [Control Method = V/f Control]*, set *H6-01 = 3 [PI Pulse Train Function = PG Feedback]* to enable this parameter.	115% (0 - 120%)	545
F1-09 (0388)	Overspeed Delay Time	V/f OLV OLV/PM AOLV/PM EZOLV Sets the length of time that the speed feedback must be more than the *F1-08* level to cause *oS [Overspeed]*. **Note:** When *A1-02 = 0 [Control Method = V/f Control]*, set *H6-01 = 3 [PI Pulse Train Function = PG Feedback]* to enable this parameter.	Determined by A1-02 (0.0 - 2.0 s)	545
F1-10 (0389)	Speed Dev Level	V/f OLV OLV/PM AOLV/PM EZOLV Sets the detection level of *dEv [Speed Deviation]* as a percentage when the maximum output frequency is 100%. **Note:** • Parameter *A1-02 [Control Method]* selects which parameter is the maximum output frequency. –*A1-02 ≠ 8 [EZ Vector]*: *E1-04 [Max Output Frequency]* –*A1-02 = 8*: *E9-02 [Maximum Speed]* • When *A1-02 = 0 [Control Method = V/f Control]*, set *H6-01 = 3 [PI Pulse Train Function = PG Feedback]* to enable this parameter.	10% (0 - 50%)	546

No. (Hex.)	Name	Description	Default (Range)	Ref.
F1-11 (038A)	Speed Dev Delay Time	V/f OLV OLV/PM AOLV/PM EZOLV Sets the length of time that the difference between the frequency reference and speed feedback must be more than the level in *F1-10* to cause *dEv [Speed Deviation]*. **Note:** When *A1-02 = 0 [Control Method = V/f Control]*, set *H6-01 = 3 [PI Pulse Train Function = PG Feedback]* to enable this parameter.	0.5 s (0.0 - 10.0 s)	546
F1-14 (038D)	Enc PGOpen Time for Detection	V/f OLV OLV/PM AOLV/PM EZOLV Sets the length of time that the drive must not receive a pulse signal to cause *PGo [Encoder (PG) Feedback Loss]*. **Note:** Motor speed and load conditions can cause *ov [Overvoltage]* and *oC [Overcurrent]* faults. When *A1-02 = 0 [Control Method = V/f Control]*, set *H6-01 = 3 [PI Pulse Train Function = PG Feedback]* to enable this parameter.	2.0 s (0.0 - 10.0 s)	546

◆ F6: COMMUNICATIONS

No. (Hex.)	Name	Description	Default (Range)	Ref.
F6-01 (03A2)	Comm.Error Selection	V/f OLV OLV/PM AOLV/PM EZOLV Sets the method to stop the motor or let the motor continue operating when the drive detects *bUS [Option Communication Error]*. 0 : Ramp->Stop 1 : Coast->Stop 2 : Fast Stop (C1-09) 3 : Alarm Only 4 : AL-Run at d1-04 5 : AL-Ramp Stop	1 (0 - 5)	551
F6-02 (03A3)	Comm Ext Flt Detect (EF0)	V/f OLV OLV/PM AOLV/PM EZOLV Sets the conditions at which *EF0 [Option Card External Fault]* is detected. 0 : Always Detected 1 : Detect@RUN Only	0 (0, 1)	551
F6-03 (03A4)	Comm Ext Flt Select (EF0)	V/f OLV OLV/PM AOLV/PM EZOLV Sets the method to stop the motor or let the motor continue operating when the drive detects *EF0 [Option Card External Fault]*. 0 : Ramp->Stop 1 : Coast->Stop 2 : Fast Stop (C1-09) 3 : Alarm Only	1 (0 - 3)	552
F6-04 (03A5)	bUS Err Det.Time	V/f OLV OLV/PM AOLV/PM EZOLV Sets the delay time for the drive to detect *bUS [Option Communication Error]*. **Note:** When you install an option card in the drive, the parameter value changes to 0.0 s.	2.0 s (0.0 - 12.0 s)	552
F6-06 (03A7)	Trq Lim Com Option	V/f OLV OLV/PM AOLV/PM EZOLV Sets the function that enables and disables the torque reference and torque limit received from the communication option. 0 : Disabled 1 : Enabled	0 (0, 1)	552
F6-07 (03A8)	Multi-Ref@NetRef/ ComRef	V/f OLV OLV/PM AOLV/PM EZOLV Sets the function that enables and disables the multi-step speed reference when the freqency reference source is NetRef or ComRef (communication option card or Modbus communications). 0 : Disable MultiStep References 1 : Enable MultiStep References	1 (0, 1)	552
F6-08 (036A)	Comm Par RST@Initialize	V/f OLV OLV/PM AOLV/PM EZOLV Sets the function to initialize *F6-xx and F7-xx parameters* when the drive is initialized with *A1-03 [Initialize Parameters]*. 0 : Retain Pars - No Reset 1 : Factory Default - Reset	0 (0, 1)	553
F6-10 (03B6)	CCLink Node Address	V/f OLV OLV/PM AOLV/PM EZOLV Sets the node address for CC-Link communication. Restart the drive after you change the parameter setting. **Note:** Be sure to set a node address that is different than all other node addresses. Do not set this parameter to *0*. Incorrect parameter settings will cause *AEr [Station Address Setting Error]* errors and the L.ERR LED on the option will come on.	0 (0 - 64)	553

No. (Hex.)	Name	Description	Default (Range)	Ref.
F6-11 (03B7)	CCLink Comm Speed	V/f OLV OLV/PM AOLV/PM EZOLV Sets the communication speed for CC-Link communication. Restart the drive after you change the parameter setting. 0 : 156 kbps 1 : 625 kbps 2 : 2.5 Mbps 3 : 5 Mbps 4 : 10 Mbps	0 (0 - 4)	553
F6-14 (03BB)	BUS Err. AutoReset	V/f OLV OLV/PM AOLV/PM EZOLV Sets the automatic reset function for *bUS [Option Communication Errors]*. 0 : Disabled 1 : Enabled	0 (0, 1)	553
F6-15 (0B5B)	Comm. Option Parameters Reload	V/f OLV OLV/PM AOLV/PM EZOLV Sets the update method when you change *F6-xx, F7-xx [F6: COMMUNICATIONS, F7: ETHERNET]*. 0 : Reload@Next Power Cycle 1 : Reload Now 2 : Cancel Reload Request	0 (0 - 2)	553
F6-16 (0B8A)	Gateway Mode	V/f OLV OLV/PM AOLV/PM EZOLV Sets the gateway mode operation and the number of connected slave drives. 0 : Disabled 1 : 1 Slave Drive 2 : 2 Slave Drives 3 : 3 Slave Drives 4 : 4 Slave Drives	0 (0 to 4)	554
F6-20 (036B)	MLII Address	V/f OLV OLV/PM AOLV/PM EZOLV Sets the station address for MECHATROLINK communication. Change the parameter then cycle power on the drive. **Note:** • The setting range changes if using MECHATROLINK-II or MECHATROLINK-III: –MECHATROLINK-II (SI-T3) range: 20 - 3F –MECHATROLINK-III (SI-ET3) range: 03 - EF • Be sure to set a node address that is different than all other node addresses. Incorrect parameter settings will cause *AEr [Station Address Setting Error]* errors and the L.ERR LED on the option will come on. • The drive detects *AEr* errors when the station address is 20 or 3F.	0021h (MECHATROLINK-II: 0020h - 003Fh, MECHATROLINK-III: 0003h - 00EFh)	554
F6-21 (036C)	MLII Frame Size	V/f OLV OLV/PM AOLV/PM EZOLV Sets the frame size for MECHATROLINK communication. Restart the drive after you change the parameter setting. 0 : 32-byte 1 : 17-byte	0 (0, 1)	554
F6-22 (036D)	MLII Link Speed	V/f OLV OLV/PM AOLV/PM EZOLV Sets the communications speed for MECHATROLINK-II. Restart the drive after you change the parameter setting. **Note:** This parameter is only available with the MECHATROLINK-II option. 0 : 10 Mbps 1 : 4 Mbps	0 (0, 1)	554
F6-23 (036E)	MLII Mon Sel (E)	V/f OLV OLV/PM AOLV/PM EZOLV Sets the Modbus register used for the monitor functions of INV_CTL (drive operation control command) and INV_I/O (drive I/O control command). Restart the drive after you change the parameter setting.	0000h (0000h - FFFFh)	555
F6-24 (036F)	MLII Mon Sel (F)	V/f OLV OLV/PM AOLV/PM EZOLV Sets the Modbus register used for the monitor functions of INV_CTL (drive operation control command) and INV_I/O (drive I/O control command). Restart the drive after you change the parameter setting.	0000h (0000h - FFFFh)	555
F6-25 (03C9)	MLII Watchdog Error Sel	V/f OLV OLV/PM AOLV/PM EZOLV Sets the method to stop the motor or let the motor continue operating when the drive detects *E5 [MECHATROLINK Watchdog Timer Err]*. 0 : Ramp->Stop 1 : Coast->Stop 2 : Fast Stop (C1-09) 3 : Alarm Only	1 (0 - 3)	555
F6-26 (03CA)	MLII bUS Err Detected	V/f OLV OLV/PM AOLV/PM EZOLV Sets the number of times that the option must detect a *bUS* alarm to cause a *bUS [Option Communication Error]*.	2 (2 - 10 times)	555

No. (Hex.)	Name	Description	Default (Range)	Ref.
F6-30 (03CB)	PROFI-DP Address	V/f OLV OLV/PM AOLV/PM EZOLV Sets the node address for PROFIBUS-DP communication. Restart the drive after you change the parameter setting. **Note:** Be sure to set an address that is different than all other node addresses. Do not set this parameter to 0.	0 (0 - 125)	555
F6-31 (03CC)	PROFI-DP Clear Command Mode	V/f OLV OLV/PM AOLV/PM EZOLV Sets what the drive will do after it receives the Clear Mode command. 0 : Reset 1 : Hold Previous State	0 (0, 1)	556
F6-32 (03CD)	PROFI-DP Data Format Select	V/f OLV OLV/PM AOLV/PM EZOLV Sets the data format of PROFIBUS-DP communication. Restart the drive after you change the parameter setting. 0 : PPO Type 1 : Conventional 2 : PPO (bit0) 3 : PPO (Enter) 4 : Conv (Enter) 5 : PPO (bit0,Enter)	0 (0 - 5)	556
F6-35 (03D0)	CANopen Address	V/f OLV OLV/PM AOLV/PM EZOLV Sets the node address for CANopen communication. Restart the drive after you change the parameter setting. **Note:** Be sure to set an address that is different than all other node addresses. Do not set this parameter to *0*. Incorrect parameter settings will cause *AEr [Station Address Setting Error]* errors and the L.ERR LED on the option will come on.	0 (0 - 126)	556
F6-36 (03D1)	CANopen BaudRate	V/f OLV OLV/PM AOLV/PM EZOLV Sets the CANopen communications speed. Restart the drive after you change the parameter setting. 0 : Auto-Detection 1 : 10 kbps 2 : 20 kbps 3 : 50 kbps 4 : 125 kbps 5 : 250 kbps 6 : 500 kbps 7 : 800 kbps 8 : 1 Mbps	0 (0 - 8)	556
F6-50 (03C1)	DNet MAC Address	V/f OLV OLV/PM AOLV/PM EZOLV Sets the MAC address for DeviceNet communication. Restart the drive after you change the parameter setting. **Note:** Be sure to set a MAC address that is different than all other node addresses. Do not set this parameter to 0. Incorrect parameter settings will cause *AEr [Station Address Setting Error]* errors and the MS LED on the option will flash.	0 (0 - 64)	557
F6-51 (03C2)	DNet Baud Rate	V/f OLV OLV/PM AOLV/PM EZOLV Sets the DeviceNet communications speed. Restart the drive after you change the parameter setting. 0 : 125 kbps 1 : 250 kbps 2 : 500 kbps 3 : Adjustable from Network 4 : Detect Automatically	0 (0 - 4)	557
F6-52 (03C3)	DNet PCA Setting	V/f OLV OLV/PM AOLV/PM EZOLV Sets the format of data that the DeviceNet communication master sends to the drive.	21 (0 - 255)	557
F6-53 (03C4)	DNet PPA Setting	V/f OLV OLV/PM AOLV/PM EZOLV Sets the format of data that the drive sends to the DeviceNet communication master.	71 (0 - 255)	557
F6-54 (03C5)	DNet Idle Fault Detection	V/f OLV OLV/PM AOLV/PM EZOLV Sets the function to detect *EF0 [Option Card External Fault]* when the drive does not receive data from the DeviceNet master. 0 : Enabled 1 : Disabled, No Fault Detection 2 : Vendor Specific 3 : RUN Forward 4 : RUN Reverse	0 (0 - 4)	557

No. (Hex.)	Name	Description	Default (Range)	Ref.
F6-55 (03C6)	DNet Baud Monitor	V/f OLV OLV/PM AOLV/PM EZOLV Sets the function to see the actual DeviceNet communications speed using the keypad. This parameter functions as a monitor only. 0 : 125 kbps 1 : 250 kbps 2 : 500 kbps	0 (0 - 2)	558
F6-56 (03D7)	DNet Speed Scale Factor	V/f OLV OLV/PM AOLV/PM EZOLV Sets the speed scale for DeviceNet communication.	0 (-15 - +15)	558
F6-57 (03D8)	DNet Current Scale Factor	V/f OLV OLV/PM AOLV/PM EZOLV Sets the current scale of the DeviceNet communication master.	0 (-15 - +15)	558
F6-58 (03D9)	DNet Torque Scale Factor	V/f OLV OLV/PM AOLV/PM EZOLV Sets the torque scale of the DeviceNet communication master.	0 (-15 - +15)	558
F6-59 (03DA)	DNet Power Scaling	V/f OLV OLV/PM AOLV/PM EZOLV Sets the power scale of the DeviceNet communication master.	0 (-15 - +15)	558
F6-60 (03DB)	DNet Voltage Scale	V/f OLV OLV/PM AOLV/PM EZOLV Sets the voltage scale of the DeviceNet communication master.	0 (-15 - +15)	558
F6-61 (03DC)	DNet Time Scale	V/f OLV OLV/PM AOLV/PM EZOLV Sets the time scale of the DeviceNet communication master.	0 (-15 - +15)	558
F6-62 (03DD)	DNet Heartbeat Interval	V/f OLV OLV/PM AOLV/PM EZOLV Sets the heartbeat for DeviceNet communication. Set this parameter to 0 to disable the heartbeat function.	0 (0 - 10)	558
F6-63 (03DE)	DNet Network MAC ID	V/f OLV OLV/PM AOLV/PM EZOLV Sets the function to see the actual DeviceNet MAC address using the keypad. This parameter functions as a monitor only.	0 (0 - 63)	559
F6-64 to F6-67 (03DF - 03E2)	DynOut.Ass109 P1 to P4	V/f OLV OLV/PM AOLV/PM EZOLV Sets Configurable Outputs 1 to 4 written to the Modbus register.	0000h (0000h - FFFFh)	559
F6-68 to F6-71 (03E3, 03E4, 03C7, and 03C8)	DynIn.Ass159 P1 to 4	V/f OLV OLV/PM AOLV/PM EZOLV Sets Configurable Inputs 1 to 4 written to the Modbus register.	0000h (0000h - FFFFh)	559
F6-72 (081B)	PowerLink Address	V/f OLV OLV/PM AOLV/PM EZOLV Sets the node ID for PowerLink communication. **Note:** Be sure to set an address that is different than all other node addresses. Do not set this parameter to 0.	0 (0 - 255)	559

◆ F7: ETHERNET

No. (Hex.)	Name	Description	Default (Range)	Ref.
F7-01 (03E5)	IP Address 1	V/f OLV OLV/PM AOLV/PM EZOLV Sets the first octet of the IP Address for the device that is connecting to the network. Restart the drive after you change this parameter. **Note:** When *F7-13 = 0 [Addr Mode@Startup = Static]*: • Use parameters *F7-01 to F7-04* to set the IP Address. Be sure to set a different IP address for each drive on the network. • Also set parameters *F7-01 to F7-12*.	192 (0 - 255)	559
F7-02 (03E6)	IP Address 2	V/f OLV OLV/PM AOLV/PM EZOLV Sets the second octet of the IP Address for the device that is connecting to the network. Restart the drive after you change this parameter. **Note:** When *F7-13 = 0 [Addr Mode@Startup = Static]*: • Use parameters *F7-01 to F7-04* to set the IP Address. Be sure to set a different IP address for each drive on the network. • Also set parameters *F7-01 to F7-12*.	168 (0 - 255)	559
F7-03 (03E7)	IP Address 3	V/f OLV OLV/PM AOLV/PM EZOLV Sets the third octet of the IP Address for the device that is connecting to the network. Restart the drive after you change this parameter. **Note:** When *F7-13 = 0 [Addr Mode@Startup = Static]*: • Use parameters *F7-01 to F7-04* to set the IP Address. Be sure to set a different IP address for each drive on the network. • Also set parameters *F7-01 to F7-12*.	1 (0 - 255)	559

No. (Hex.)	Name	Description	Default (Range)	Ref.
F7-04 (03E8)	IP Address 4	V/f OLV OLV/PM AOLV/PM EZOLV Sets the fourth octet of the IP Address for the device that is connecting to the network. Restart the drive after you change this parameter. **Note:** When *F7-13 = 0 [Addr Mode@Startup = Static]*: • Use parameters *F7-01 to F7-04* to set the IP Address. Be sure to set a different IP address for each drive on the network. • Also set parameters *F7-01 to F7-12*.	20 (0 - 255)	560
F7-05 (03E9)	Subnet Mask 1	V/f OLV OLV/PM AOLV/PM EZOLV Sets the first octet of the subnet mask of the connected network. **Note:** Set this parameter when *F7-13 = 0 [Addr Mode@Startup = Static]*.	255 (0 - 255)	560
F7-06 (03EA)	Subnet Mask 2	V/f OLV OLV/PM AOLV/PM EZOLV Sets the second octet of the subnet mask of the connected network. **Note:** Set this parameter when *F7-13 = 0 [Addr Mode@Startup = Static]*.	255 (0 - 255)	560
F7-07 (03EB)	Subnet Mask 3	V/f OLV OLV/PM AOLV/PM EZOLV Sets the third octet of the subnet mask of the connected network. **Note:** Set this parameter when *F7-13 = 0 [Addr Mode@Startup = Static]*.	255 (0 - 255)	560
F7-08 (03EC)	Subnet Mask 4	V/f OLV OLV/PM AOLV/PM EZOLV Sets the fourth octet of the subnet mask of the connected network. **Note:** Set this parameter when *F7-13 = 0 [Addr Mode@Startup = Static]*.	0 (0 - 255)	560
F7-09 (03ED)	Gateway Addr 1	V/f OLV OLV/PM AOLV/PM EZOLV Sets the first octet of the gateway address of the connected network. **Note:** Set this parameter when *F7-13 = 0 [Addr Mode@Startup = Static]*.	192 (0 - 255)	560
F7-10 (03EE)	Gateway Addr 2	V/f OLV OLV/PM AOLV/PM EZOLV Sets the second octet of the gateway address of the connected network. **Note:** Set this parameter when *F7-13 = 0 [Addr Mode@Startup = Static]*.	168 (0 - 255)	560
F7-11 (03EF)	Gateway Addr 3	V/f OLV OLV/PM AOLV/PM EZOLV Sets the third octet of the gateway address of the connected network. **Note:** Set this parameter when *F7-13 = 0 [Addr Mode@Startup = Static]*.	1 (0 - 255)	561
F7-12 (03F0)	Gateway Addr 4	V/f OLV OLV/PM AOLV/PM EZOLV Sets the fourth octet of the gateway address of the connected network. **Note:** Set this parameter when *F7-13 = 0 [Addr Mode@Startup = Static]*.	1 (0 - 255)	561
F7-13 (03F1)	Addr Mode@Startup	V/f OLV OLV/PM AOLV/PM EZOLV Sets the method to set option card IP addresses. 0 : Static 1 : BOOTP 2 : DHCP **Note:** • The following setting values are available when using the PROFINET communication option card (SI-EP3). –0: Static –2: DHCP • When *F7-13 = 0*, set parameters *F7-01 to F7-12 [IP Address 1 to Gateway Addr 4]* to set the IP Address. Be sure to set a different IP address for each drive on the network.	2 (0 - 2)	561
F7-14 (03F2)	Duplex Mode Selection	V/f OLV OLV/PM AOLV/PM EZOLV Sets the duplex mode setting method. 0 : Half/Half 1 : Auto/Auto 2 : Full/Full 3 : Half/Auto 4 : Half/Full 5 : Auto/Half 6 : Auto/Full 7 : Full/Half 8 : Full/Auto	1 (0 - 8)	561

No. (Hex.)	Name	Description	Default (Range)	Ref.
F7-15 (03F3)	Comm. BaudRate	V/f OLV OLV/PM AOLV/PM EZOLV Sets the communications speed. 10 : 10/10 Mbps 100 : 100/100 Mbps 101 : 10/100 Mbps 102 : 100/10 Mbps	10 (10, 100 - 102)	562
F7-16 (03F4)	Timeout Value	V/f OLV OLV/PM AOLV/PM EZOLV Sets the detection time for a communications timeout. **Note:** Set this parameter to 0.0 to disable the connection timeout function.	0.0 s (0.0 - 30.0 s)	562
F7-17 (03F5)	E/IP Speed Scale Factor	V/f OLV OLV/PM AOLV/PM EZOLV Sets the scaling factor for the speed monitor in the EtherNet/IP Class ID 2AH Object.	0 (-15 - +15)	562
F7-18 (03F6)	E/IP Current Scale Factor	V/f OLV OLV/PM AOLV/PM EZOLV Sets the scaling factor for the output current monitor in the EtherNet/IP Class ID 2AH Object.	0 (-15 - +15)	562
F7-19 (03F7)	E/IP Torque Scale Factor	V/f OLV OLV/PM AOLV/PM EZOLV Sets the scaling factor for the torque monitor in the EtherNet/IP Class ID 2AH Object.	0 (-15 - +15)	562
F7-20 (03F8)	E/IP Power Scale Factor	V/f OLV OLV/PM AOLV/PM EZOLV Sets the scaling factor for the power monitor in the EtherNet/IP Class ID 2AH Object.	0 (-15 - +15)	562
F7-21 (03F9)	E/IP Voltage Scale Factor	V/f OLV OLV/PM AOLV/PM EZOLV Sets the scaling factor for the voltage monitor in the EtherNet/IP Class ID 2AH Object.	0 (-15 - +15)	562
F7-22 (03FA)	E/IP Time Scale Factor	V/f OLV OLV/PM AOLV/PM EZOLV Sets the scaling factor for the time monitor in the EtherNet/IP Class ID 2AH Object.	0 (-15 - +15)	563
F7-23 - F7-27 (03FB - 03FF) F7-28- F7-32 (0370 - 0374)	DynOut.Ass116 P1 to 5 for CommCard, DynOut. Ass116 P6 to 10 for CommCard	V/f OLV OLV/PM AOLV/PM EZOLV Sets Output Assembly 116. The drive writes the values from Output Assembly 116 to the Modbus address register that is stored for each parameter. The drive will not write the values from Output Assembly 116 to the registers when the Modbus address is 0.	0	563
F7-33 - F7-42 (0375 - 037E)	DynIn.Ass166 P1 to 10 for CommCard	V/f OLV OLV/PM AOLV/PM EZOLV Sets Input Assembly 166. The drive sends the values from the Modbus address registers stored for each parameter to Input Assembly 166. The drive returns the default register value for the option card when the Modbus address is 0 and the value sent to Input Assembly 166 is not defined.	0	563
F7-60 (0780)	PZD1 WR(CtrlWrd)	V/f OLV OLV/PM AOLV/PM EZOLV Sets the Modbus address for PZD1 (PPO output). PZD1 (PPO output) functions as the STW when *F7-60 = 0, 1, or 2*.	0	563
F7-61 (0781)	PZD2 WR(FRef)	V/f OLV OLV/PM AOLV/PM EZOLV Sets the Modbus address for PZD2 (PPO output). PZD2 (PPO output) functions as the HSW when *F7-61 = 0, 1, or 2*.	0	563
F7-62 (0782)	PZD3 Write	V/f OLV OLV/PM AOLV/PM EZOLV Sets the Modbus address for PZD3 (PPO output). A value of 0, 1, or 2 will disable the PZD3 (PPO output) write operation to the Modbus register.	0	563
F7-63 (0783)	PZD4 Write	V/f OLV OLV/PM AOLV/PM EZOLV Sets the Modbus address for PZD4 (PPO output). A value of 0, 1, or 2 will disable the PZD4 (PPO output) write operation to the Modbus register.	0	563
F7-64 (0784)	PZD5 Write	V/f OLV OLV/PM AOLV/PM EZOLV Sets the Modbus address for PZD5 (PPO output). A value of 0, 1, or 2 will disable the PZD5 (PPO output) write operation to the Modbus register.	0	563
F7-65 (0785)	PZD6 Write	V/f OLV OLV/PM AOLV/PM EZOLV Sets the Modbus address for PZD6 (PPO output). A value of 0, 1, or 2 will disable the PZD6 (PPO output) write operation to the Modbus register.	0	564
F7-66 (0786)	PZD7 Write	V/f OLV OLV/PM AOLV/PM EZOLV Sets the Modbus address for PZD7 (PPO output). A value of 0, 1, or 2 will disable the PZD7 (PPO output) write operation to the Modbus register.	0	564
F7-67 (0787)	PZD8 Write	V/f OLV OLV/PM AOLV/PM EZOLV Sets the Modbus address for PZD8 (PPO output). A value of 0, 1, or 2 will disable the PZD8 (PPO output) write operation to the Modbus register.	0	564
F7-68 (0788)	PZD9 Write	V/f OLV OLV/PM AOLV/PM EZOLV Sets the Modbus address for PZD9 (PPO output). A value of 0, 1, or 2 will disable the PZD9 (PPO output) write operation to the Modbus register.	0	564
F7-69 (0789)	PZD10 Write	V/f OLV OLV/PM AOLV/PM EZOLV Sets the Modbus address for PZD10 (PPO output). A value of 0, 1, or 2 will disable the PZD10 (PPO output) write operation to the Modbus register.	0	564
F7-70 (078A)	PZD1 RD (StatWord))	V/f OLV OLV/PM AOLV/PM EZOLV Sets the Modbus address for PZD1 (PPO Read). PZD1 (PPO input) functions as the ZSW when *F7-70 = 0*.	0	564

No. (Hex.)	Name	Description	Default (Range)	Ref.
F7-71 (078B)	PZD2 RD (OutFreq)	V/f OLV OLV/PM AOLV/PM EZOLV Sets the Modbus address for PZD2 (PPO Read). PZD2 (PPO input) functions as the HIW when *F7-71 = 0*.	0	564
F7-72 (078C)	PZD3 Read	V/f OLV OLV/PM AOLV/PM EZOLV Sets the Modbus address for PZD3 (PPO Read). A value of 0 will disable the PZD3 (PPO Read) load operation from the Modbus register.	0	564
F7-73 (078D)	PZD4 Read	V/f OLV OLV/PM AOLV/PM EZOLV Sets the Modbus address for PZD4 (PPO Read). A value of 0 will disable the PZD4 (PPO Read) load operation from the Modbus register.	0	565
F7-74 (078E)	PZD5 Read	V/f OLV OLV/PM AOLV/PM EZOLV Sets the Modbus address for PZD5 (PPO Read). A value of 0 will disable the PZD5 (PPO Read) load operation from the Modbus register.	0	565
F7-75 (078F)	PZD6 Read	V/f OLV OLV/PM AOLV/PM EZOLV Sets the Modbus address for PZD6 (PPO Read). A value of 0 will disable the PZD6 (PPO Read) load operation from the Modbus register.	0	565
F7-76 (0790)	PZD7 Read	V/f OLV OLV/PM AOLV/PM EZOLV Sets the Modbus address for PZD7 (PPO Read). A value of 0 will disable the PZD7 (PPO input) load operation from the Modbus register.	0	565
F7-77 (0791)	PZD8 Read	V/f OLV OLV/PM AOLV/PM EZOLV Sets the Modbus address for PZD8 (PPO Read). A value of 0 will disable the PZD8 (PPO Read) load operation from the Modbus register.	0	565
F7-78 (0792)	PZD9 Read	V/f OLV OLV/PM AOLV/PM EZOLV Sets the Modbus address for PZD9 (PPO Read). A value of 0 will disable the PZD9 (PPO Read) load operation from the Modbus register.	0	565
F7-79 (0793)	PZD10 Read	V/f OLV OLV/PM AOLV/PM EZOLV Sets the Modbus address for PZD10 (PPO Read). A value of 0 will disable the PZD10 (PPO Read) load operation from the Modbus register.	0	565

11.9 H: TERMINALS

◆ H1: DIGITAL INPUTS

No. (Hex.)	Name	Description	Default (Range)	Ref.
H1-01 (0438)	DI1 Function Selection	V/f OLV OLV/PM AOLV/PM EZOLV Sets the function for MFDI terminal DI1. **Note:** The default setting is *0* when the drive is initialized for *3-Wire Initialization [A1-03 = 3330]*.	1 (1 - 4, 6 - 19F)	567
H1-02 (0439)	DI2 Function Selection	V/f OLV OLV/PM AOLV/PM EZOLV Sets the function for MFDI terminal DI2. **Note:** The default setting is *0* when the drive is initialized for *3-Wire Initialization [A1-03 = 3330]*.	2 (1 - 4, 6 - 19F)	567
H1-03 (0400)	DI3 Function Selection	V/f OLV OLV/PM AOLV/PM EZOLV Sets the function for MFDI terminal DI3.	24 (0 - 19F)	567
H1-04 (0401)	DI4 Function Selection	V/f OLV OLV/PM AOLV/PM EZOLV Sets the function for MFDI terminal DI4.	7B (0 - 19F)	567
H1-05 (0402)	DI5 Function Selection	V/f OLV OLV/PM AOLV/PM EZOLV Sets the function for MFDI terminal DI5. **Note:** When you initialize the drive for *3-Wire Initialization [A1-03 = 3330]*, the default setting is *5*.	A (0 - 19F)	567
H1-06 (0403)	DI6 Function Selection	V/f OLV OLV/PM AOLV/PM EZOLV Sets the function for MFDI terminal DI6. **Note:** When you initialize the drive for *3-Wire Initialization [A1-03 = 3330]*, the default setting is *A*.	B (0 - 19F)	567
H1-07 (0404)	DI7 Function Selection	V/f OLV OLV/PM AOLV/PM EZOLV Sets the function for MFDI terminal DI7. **Note:** When you initialize the drive for *3-Wire Initialization [A1-03 = 3330]*, the default setting is *B*.	6 (0 - 1FF)	568
H1-21 (0B70)	DI1 Funct.Sel 2	V/f OLV OLV/PM AOLV/PM EZOLV Sets the second function for MFDI terminal DI1.	0 (1 - 4, 6 - 19F)	568
H1-22 (0B71)	DI2 Funct.Sel 2	V/f OLV OLV/PM AOLV/PM EZOLV Sets the second function for MFDI terminal DI2.	0 (1 - 4, 6 - 19F)	568
H1-23 (0B72)	DI3 Funct.Sel 2	V/f OLV OLV/PM AOLV/PM EZOLV Sets the second function for MFDI terminal DI3.	0 (1 - 4, 6 - 19F)	568
H1-24 (0B73)	DI4 Funct.Sel 2	V/f OLV OLV/PM AOLV/PM EZOLV Sets the second function for MFDI terminal DI4.	0 (1 - 4, 6 - 19F)	568
H1-25 (0B74)	DI5 Funct.Sel 2	V/f OLV OLV/PM AOLV/PM EZOLV Sets the second function for MFDI terminal DI5.	0 (1 - 4, 6 - 19F)	568
H1-26 (0B75)	DI6 Funct.Sel 2	V/f OLV OLV/PM AOLV/PM EZOLV Sets the second function for MFDI terminal DI6.	F (1 - 19F)	569
H1-27 (0B76)	DI7 Funct.Sel 2	V/f OLV OLV/PM AOLV/PM EZOLV Sets the second function for MFDI terminal DI7.	0 (1 - 4, 6 - 19F)	569
H1-40 (0B54)	Mbus 15C0h b0 Input Function	V/f OLV OLV/PM AOLV/PM EZOLV Selects MFDI function assigned to *bit 0* of the Modbus register *15C0 (Hex.)*.	0 (1 - 4, 6 - 19F)	569
H1-41 (0B55)	Mbus 15C0h b1 Input Function	V/f OLV OLV/PM AOLV/PM EZOLV Selects MFDI function assigned to *bit 1* of the Modbus register *15C0 (Hex.)*.	0 (1 - 4, 6 - 19F)	569
H1-42 (0B56)	Mbus 15C0h b2 Input Function	V/f OLV OLV/PM AOLV/PM EZOLV Selects MFDI function assigned to *bit 2* of the Modbus register *15C0 (Hex.)*.	0 (1 - 4, 6 - 19F)	569

■ H1-xx: MFDI Function Select

Setting Value	Function	Description	Ref.
0	Through Mode	V/f OLV OLV/PM AOLV/PM EZOLV Use this setting for unused terminals or to use terminals in through mode.	569
1	Forward Run	V/f OLV OLV/PM AOLV/PM EZOLV Sets the Forward Run command for 2-wire sequence 1. Set this function and *H1-xx = 2 [Reverse Run]* at the same time. ON : Forward Run OFF : Run Stop **Note:** • Turning ON the Forward Run command terminal and the Reverse Run command terminal will cause alarm *EF [FWD/REV Run Command Input Error]* and the motor will ramp to stop. • Initialize the drive with a 2-wire sequence to set the Forward Run command to terminal DI1. • This function will not operate at the same time as *H1-xx = 3, 4 [Run Command, FWD/REV Cmd]*.	570
2	Reverse Run	V/f OLV OLV/PM AOLV/PM EZOLV Sets the Forward Run command for 2-wire sequence 1. Set this function and *H1-xx = 1 [Forward Run]* at the same time. ON : Reverse Run OFF : Run Stop **Note:** • Turning ON the Forward Run command terminal and the Reverse Run command terminal will cause alarm EF [FWD/REV Run Command Input Error] and the motor will ramp to stop. • Initialize the drive with a 2-wire sequence to set the Reverse Run command to terminal DI2. • This function will not operate at the same time as *H1-xx = 3, 4 [Run Command, FWD/REV Cmd]*.	570
3	Run Command	V/f OLV OLV/PM AOLV/PM EZOLV Sets the Run command for 2-wire sequence 2. Set this function and *H1-xx = 4 [FWD/REV Cmd]* at the same time. ON : Run OFF : Stop **Note:** This function will not operate at the same time as *H1-xx = 1, 2 [Forward Run, Reverse Run]*.	570
4	FWD/REV Cmd	V/f OLV OLV/PM AOLV/PM EZOLV Sets the direction of motor rotation for 2-wire sequence 2. Set this function and *H1-xx = 3 [Run Command]* together. ON : Reverse run OFF : Forward run **Note:** This function will not operate at the same time as *H1-xx = 1, 2 [Forward Run, Reverse Run]*.	570
5	3-Wire Seq.	V/f OLV OLV/PM AOLV/PM EZOLV Sets the direction of motor rotation for 3-wire sequence.	571
6	Jog Reference	V/f OLV OLV/PM AOLV/PM EZOLV Sets the drive to use the JOG Frequency Reference (JOG command) set in *d1-17*. The JOG Frequency Reference (JOG command) overrides Frequency References *1 to 16 (d1-01 to d1-16)*.	571
7	Jog Forward	V/f OLV OLV/PM AOLV/PM EZOLV Sets the command to operate the motor in the forward direction at the Jog Frequency set in *d1-17 [Jog Reference]*.	572
8	Jog Reverse	V/f OLV OLV/PM AOLV/PM EZOLV Sets the command to operate the motor in reverse at the Jog Frequency set in *d1-17 [Jog Reference]*.	572
9	Ext Ref 1/2	V/f OLV OLV/PM AOLV/PM EZOLV Sets the drive to use Run command source 1/2 or Reference command source 1/2 when in REMOTE Mode. ON : *b1-15 [Freq. Ref. Sel. 2], b1-16 [Run Comm. Sel 2]* OFF : *b1-01 [Freq. Ref. Sel. 1], b1-02 [Run Comm. Sel 1]*	572
A	MultSpd Ref1	V/f OLV OLV/PM AOLV/PM EZOLV Uses speed references *d1-01 to d1-16* to set a multi-step speed reference.	572
B	MultSpd Ref2	V/f OLV OLV/PM AOLV/PM EZOLV Uses speed references *d1-01 to d1-16* to set a multi-step speed reference.	572
C	MultSpd Ref3	V/f OLV OLV/PM AOLV/PM EZOLV Uses speed references *d1-01 to d1-16* to set a multi-step speed reference.	573
D	MultSpd Ref4	V/f OLV OLV/PM AOLV/PM EZOLV Uses speed references *d1-01 to d1-16* to set a multi-step speed reference.	573
E	Offset Frq 1	V/f OLV OLV/PM AOLV/PM EZOLV Sets the function to add the offset frequency set in *d7-01 [Offset Frq 1]* to the frequency reference when the terminal activates.	573
F	Offset Frq 2	V/f OLV OLV/PM AOLV/PM EZOLV Sets the function to add the offset frequency set in *d7-02 [Offset Frq 2]* to the frequency reference when the terminal activates.	573
10	Offset Frq 3	V/f OLV OLV/PM AOLV/PM EZOLV Sets the function to add the offset frequency set in *d7-03 [Offset Frq 3]* to the frequency reference when the terminal activates.	573

Setting Value	Function	Description	Ref.
11	LOC/REM Sel.	V/f OLV OLV/PM AOLV/PM EZOLV Sets drive control for the keypad (LOCAL) or an external source (REMOTE). ON : LOCAL OFF : REMOTE	573
12	AI Input Sel	V/f OLV OLV/PM AOLV/PM EZOLV Sets the command that enables or disables the terminals selected in *H3-14 [An.In Term.Enable Sel]*. ON : Input to the terminal selected with *H3-14* is enabled OFF : Input to the terminal selected with *H3-14* is disabled	574
15	FWD/REV Det	V/f OLV OLV/PM AOLV/PM EZOLV Set the motor rotation direction when you use Simple Closed Loop V/f Control method. ON : Reverse run OFF : Forward run	574
16	Ref Sample	V/f OLV OLV/PM AOLV/PM EZOLV Sets the command to sample the frequency reference at terminal AI1 or AI2, and hold the frequency reference at that frequency.	574
17	Ac/Dec Hold	V/f OLV OLV/PM AOLV/PM EZOLV Momentarily pauses motor acceleration and deceleration when the terminal is turned ON, retains the output frequency that was stored in the drive at the time of the pause, and restarts motor operation.	574
18	Ac/Dec Time1	V/f OLV OLV/PM AOLV/PM EZOLV Sets the drive to use *Acceleration/Deceleration Time 1 [C1-01, C1-02]* or *Acceleration/Deceleration Time 2 [C1-03, C1-04]*.	575
19	Ac/Dec Time2	V/f OLV OLV/PM AOLV/PM EZOLV Set this function and *H1-xx = 18 [Ac/Dec Time1]* together. Sets the drive to use *Acceleration/Deceleration Time 3 [C1-05, C1-06]* or *Acceleration/Deceleration Time 4 [C1-07, C1-08]*.	575
1A	Drive Enable	V/f OLV OLV/PM AOLV/PM EZOLV Sets the function to show *dnE [Drive Enabled]* on the keypad and ignore Run commands when the terminal is OFF.	575
1B	Baseblock NO	V/f OLV OLV/PM AOLV/PM EZOLV Sets the command that stops drive output and coasts the motor to stop when the input is ON. ON : Baseblock (drive output stop) OFF : Normal operation	575
1E	Baseblock NC	V/f OLV OLV/PM AOLV/PM EZOLV Sets the command that stops drive output and coasts the motor to stop when the input terminal is OFF. ON : Normal operation OFF : Baseblock (drive output stop)	576
20 to 2F	External Fault	V/f OLV OLV/PM AOLV/PM EZOLV Sets a command to stop the drive when a failure or fault occurs on an external device. 20 : External Fault (ExF NO-AlRmp) 21 : External Fault (ExF NC-AlRmp) 22 : External Fault (ExF NO-RnRmp) 23 : External Fault (ExF NC-RnRmp) 24 : External Fault (ExF NO-AlCoast) 25 : External Fault ExF NC-AlCoast) 26 : External Fault (ExF NO-RnCoast) 27 : External Fault (ExF NC-RnCoast) 28 : External Fault (ExF NO-AlFStop) 29 : External Fault (ExF NC-AlFStop) 2A : External Fault (ExF NO-RnFStop) 2B : External Fault (ExF NC-RnFStop) 2C : External Fault (ExF NO-AlAlarm) 2D : External Fault (ExF NC-AlAlarm) 2E : External Fault (ExF NO-RnAlarm) 2F : External Fault (ExF NC-RnAlarm)	576
30	DCInj Cmd	V/f OLV OLV/PM AOLV/PM EZOLV Sets the command to use DC Injection Braking to stop the motor. **Note:** When *A1-02 = 8 [Control Method = EZ Vector]*, this function is available only when you use a PM motor.	577
32	HiSlipBraking	V/f OLV OLV/PM AOLV/PM EZOLV Sets the command to use high-slip braking to stop the motor.	577
34	Fast Stop NO	V/f OLV OLV/PM AOLV/PM EZOLV Sets the command to ramp to stop in the deceleration time set in *C1-09 [Fast Stop Time]* when the input terminal is activated while the drive is operating.	577
35	Fast Stop NC	V/f OLV OLV/PM AOLV/PM EZOLV Sets the command to ramp to stop in the deceleration time set in *C1-09 [Fast Stop Time]* when the input terminal is activated while the drive is operating.	577

Setting Value	Function	Description	Ref.
3E	SCBraking NO	V/f OLV **OLV/PM** AOLV/PM EZOLV Sets operation of Short Circuit Braking (N.O.). ON : Short Circuit Braking is enabled. OFF : Normal operation **Note:** When *A1-02 = 8 [Control Method = EZ Vector]*, this function is available only when you use a PM motor.	578
3F	SCBraking NC	V/f OLV **OLV/PM** AOLV/PM EZOLV Sets operation of Short Circuit Braking (N.C.). ON : Normal operation OFF : Short Circuit Braking is enabled. **Note:** When *A1-02 = 8 [Control Method = EZ Vector]*, this function is available only when you use a PM motor.	578
40	KEB Thru1 NC	**V/f OLV OLV/PM** AOLV/PM EZOLV Sets operation of the KEB1 function through the KEB Ride-Thru 1 (N.C.). ON : Normal operation OFF : Deceleration during momentary power loss	578
41	KEB Thru1 NO	**V/f OLV OLV/PM** AOLV/PM EZOLV Sets operation of the KEB1 function through the KEB Ride-Thru 1 (N.O.). ON : Deceleration during momentary power loss OFF : Normal operation	579
42	KEB Thru2 NC	**V/f OLV OLV/PM** AOLV/PM EZOLV Sets operation of the KEB2 function through the KEB Ride-Thru 2 (N.C.). ON : Normal operation OFF : Deceleration during momentary power loss	579
43	KEB Thru2 NO	**V/f OLV OLV/PM** AOLV/PM EZOLV Sets operation of the KEB2 function through the KEB Ride-Thru 2 (N.O.). ON : Deceleration during momentary power loss OFF : Normal operation	579
44	Field weakening	**V/f** OLV OLV/PM AOLV/PM EZOLV Sets the function to send the Field Weakening Level and Field Weakening Frequency Limit commands set in *d6-01 [Field Weak Level] and d6-02 [Field Weak FqLimit]* when the input terminal is activated.	579
45	ASR Gain Switch	V/f OLV OLV/PM AOLV/PM EZOLV Sets the function to switch the ASR proportional gain set in *C5-01 [ASR PGain 1]* and *C5-03 [ASR PGain 2]*. ON : C5-03 OFF : C5-01	579
46	ASR I Reset	V/f OLV OLV/PM AOLV/PM EZOLV Sets the command to reset the integral value and use PI control or P control for the speed control loop. ON : P control OFF : PI control	580
60	Timer Fn Input	**V/f OLV OLV/PM** AOLV/PM EZOLV Sets the command to start the timer function. Use this setting with *Timer Output [H2-xx = 39]*.	580
61	Motor 2 Select	**V/f OLV** OLV/PM AOLV/PM EZOLV Sets the command for the drive to operate motor 1 or motor 2. Stop the motors before switching. ON : Operate motor 2 OFF : Operate motor 1	580
62	Up Command	**V/f OLV OLV/PM** AOLV/PM EZOLV Sets the command to use a push button switch to increase the drive frequency reference. You must also set *Setting 63 [Down Command]*. ON : Increases the frequency reference. OFF : Holds the current frequency reference.	580
63	Down Command	**V/f OLV OLV/PM** AOLV/PM EZOLV Sets the command to use a push button switch to decrease the drive frequency reference. You must also set *Setting 62 [Up Command]*. ON : Decreases the frequency reference. OFF : Holds the current frequency reference.	582
65	Up2 Command	**V/f OLV OLV/PM** AOLV/PM EZOLV Sets the function to increase the frequency reference bias value to accelerate the motor when the terminal is activated. Set this function and *H1-xx = 66 [Dw2 Command]* together. **Note:** When you use this function, use *d4-08* and *d4-09 [Up/Dw2 Bias Upper Limit and Up/Dw2 Bias Lower Limit]* to set the optimal bias limit value.	583
66	Dw2 Command	**V/f OLV OLV/PM** AOLV/PM EZOLV Sets the function to decrease the frequency reference bias value to decelerate the motor when the terminal is activated. Set this function and *H1-xx = 65 [Up2 Command]* at the same time. **Note:** When you use this function, use *d4-08* and *d4-09 [Up/Dw2 Bias Lower Limit]* to set the optimal bias limit value.	584

Setting Value	Function	Description	Ref.
67	SpdSrch Fmax	V/f OLV OLV/PM AOLV/PM EZOLV Sets the function to start speed search using an external reference although *b3-01 = 0 [SpSrch@Start Selection = Disabled]*. **Note:** The drive will detect *oPE03 [Multi-Function Input Setting Err]* when *H1-xx = 67 and 68* are set at the same time.	584
68	SpdSrch Fref	V/f OLV OLV/PM AOLV/PM EZOLV Sets the function to start speed search using an external reference although *b3-01 = 0 [SpSrch@Start Selection = Disabled]*. **Note:** The drive will detect *oPE03 [Multi-Function Input Setting Err]* when *H1-xx = 67 and 68* are set at the same time.	584
6A	PID Disable	V/f OLV OLV/PM AOLV/PM EZOLV Sets the command to disable PID control when *b5-01 = 1 [PID Enable = Enabled]*. ON : PID control disabled OFF : PID control enabled	584
71	PID I Reset	V/f OLV OLV/PM AOLV/PM EZOLV Sets the command to reset and hold the PID control integral to 0 when the terminal is ON.	585
72	PID I Hold	V/f OLV OLV/PM AOLV/PM EZOLV Sets the command to hold the integral value of the PID control while the terminal is activated.	585
75	PID SS Cancel	V/f OLV OLV/PM AOLV/PM EZOLV Sets the PID soft starter function. ON : No OFF : Yes	585
76	PID InLv Select	V/f OLV OLV/PM AOLV/PM EZOLV Sets the command to turn the terminal ON and OFF to switch the PID input level (polarity).	585
77	PID SP 1	V/f OLV OLV/PM AOLV/PM EZOLV Set this function and *H1-xx = 78 [PID SP 2]* together. Sets the function to switch the PID setpoint to *b5-58 to b5-60 [PID Setpoints 2 to 4]*.	585
78	PID SP 1	V/f OLV OLV/PM AOLV/PM EZOLV Set this function and *H1-xx = 77 [PID SP 1]* at the same time. Sets the function to switch the PID setpoint to *b5-58 to b5-60 [PID Setpoints 2 to 4]*.	585
7A	PID BiDir	V/f OLV OLV/PM AOLV/PM EZOLV Sets operation of the PID Bi-Directional function. ON : Enabled OFF : Disabled	585
7B	Fault Reset	V/f OLV OLV/PM AOLV/PM EZOLV Sets the command to reset the current fault when the Run command is inactive. **Note:** The drive ignores the fault reset command when the Run command is active. Remove the Run command before trying to reset a fault.	586
7C	Prg Lock	V/f OLV OLV/PM AOLV/PM EZOLV Sets the command to prevent parameter changes when the terminal is OFF. ON : Programming Lockout OFF : Parameter Write Prohibit	586
7D	Drive OH2	V/f OLV OLV/PM AOLV/PM EZOLV Sets the drive to display an *oH2 [Drive Overheat Warning]* alarm when the input terminal is ON. The alarm does not have an effect on drive operation.	586
7E	Node Setup	V/f OLV OLV/PM AOLV/PM EZOLV Sets the function in CANopen communications to start the Node Setup function to set the drive node address from the host controller.	586
7F	Comms Test	V/f OLV OLV/PM AOLV/PM EZOLV Set the function for the drive to self-test RS-485 serial communications operation.	586
90 - 96	Q2pack DI1 to 7	V/f OLV OLV/PM AOLV/PM EZOLV Sets digital inputs used with Q2pack. Refer to the Q2pack online manual for more information.	586
9F	Q2pack Disable	V/f OLV OLV/PM AOLV/PM EZOLV Sets operation of the Q2pack program saved in the drive. ON : No OFF : Yes **Note:** Set *A1-07 = 2 [Q2pack Enable = With DI]* to enable this function.	586
101 to 19F	Inverse Input of 1 to 9F	Sets the function of the selected MFDI to operate inversely. To select the function, enter “1xx”, where the “xx” is the function setting value. **Note:** You cannot use inverse input for all functions. Refer to Table 12.38 for more information.	587

◆ H2: DIGITAL OUTPUTS

No. (Hex.)	Name	Description	Default (Range)	Ref.
H2-01 (040B)	NO,NC,CM FuncSelection	V/f OLV OLV/PM AOLV/PM EZOLV Sets the function set for MFDO terminal NO-CM or NC-CM. **Note:** Set this parameter to *0* when the terminal is not being used or to use the terminal in through mode.	3 (0 - 1FF)	589
H2-02 (040C)	DO1-O1C Func Selection	V/f OLV OLV/PM AOLV/PM EZOLV Sets the function for MFDO terminal DO1-O1C. **Note:** Set this parameter to *0* when the terminal is not being used or to use the terminal in through mode.	5 (0 - 1FF)	589
H2-03 (040D)	DO2-O2C Func Selection	V/f OLV OLV/PM AOLV/PM EZOLV Sets the function for MFDO terminal DO2-O2C. **Note:** Set this parameter to *0* when the terminal is not being used or to use the terminal in through mode.	F (0 - 1FF)	589
H2-06 (0437)	kWH Out Unit Selection	V/f OLV OLV/PM AOLV/PM EZOLV Sets the unit for the output signal when *H2-01 to H2-03 = 65 [MFDO Function Select = WattH Pulse]*. 1 : 0.1 kWh units 2 : 1 kWh units 3 : 10 kWh units 4 : 100 kWh units 5 : 1000 kWh units	1 (1 - 5)	589
H2-07 (0B3A)	Mbus Reg1 Address Select	V/f OLV OLV/PM AOLV/PM EZOLV Sets the address of the Modbus register output to the MFDO terminal.	0001 (0001 - 1FFF)	590
H2-08 (0B3B)	Mbus Reg1 Bit Select	V/f OLV OLV/PM AOLV/PM EZOLV Sets the bit of the Modbus register output to the MFDO terminal.	0000 (0000 - FFFF)	590
H2-09 (0B3C)	Mbus Reg2 Address Select	V/f OLV OLV/PM AOLV/PM EZOLV Sets the address of the Modbus register output to the MFDO terminal.	0001 (0001 - 1FFF)	590
H2-10 (0B3D)	Mbus Reg2 Bit Select	V/f OLV OLV/PM AOLV/PM EZOLV Sets the bit of the Modbus register output to the MFDO terminal.	0000 (0000 - FFFF)	590
H2-20 (1540)	Compare1 Mon. Selection	V/f OLV OLV/PM AOLV/PM EZOLV Sets the monitor number for comparator 1. Set the *x-xx* part of the *Ux-xx [Monitor]*. For example, set *H2-20 = 102* to monitor *U1-02 [Output Frequency]*.	102 (000 - 999)	591
H2-21 (1541)	Compare1 Low Limit	V/f OLV OLV/PM AOLV/PM EZOLV Sets the lower limit detection level for comparator 1 when the full scale analog output for the monitor selected in *H2-20 [Compare1 Mon.Selection]* is the 100% value.	0.0% (0.0 - 300.0%)	591
H2-22 (1542)	Compare1 Up Limit	V/f OLV OLV/PM AOLV/PM EZOLV Sets the upper limit detection level for comparator 1 when the full scale analog output for the monitor selected in *H2-20 [Compare1 Mon.Selection]* is the 100% value.	0.0% (0.0 - 300.0%)	591
H2-23 (1543)	Compare1 Hysteresis	V/f OLV OLV/PM AOLV/PM EZOLV Sets the hysteresis level for comparator 1 as a percentage of the full scale analog output for the monitor selected in *H2-20 [Compare1 Mon.Selection]*.	0.0% (0.0 - 10.0%)	591
H2-24 (1544)	Compare1 On-Delay Time	V/f OLV OLV/PM AOLV/PM EZOLV Sets the on-delay time for comparator 1.	0.0 s (0.0 - 600.0 s)	591
H2-25 (1545)	Compare1 Off-Delay Time	V/f OLV OLV/PM AOLV/PM EZOLV Sets the off-delay time for comparator 1.	0.0 s (0.0 - 600.0 s)	591
H2-26 (1546)	Compare2 Mon. Selection	V/f OLV OLV/PM AOLV/PM EZOLV Sets the monitor number for comparator 2. Set the *x-xx* part of the *Ux-xx [Monitor]*. For example, set *H2-26 = 103* to monitor *U1-03 [Output Current]*.	103 (000 - 999)	592
H2-27 (1547)	Compare2 Low Limit	V/f OLV OLV/PM AOLV/PM EZOLV Sets the lower limit detection level for comparator 2 as a percentage of the full scale analog output for the monitor selected in *H2-26 [Compare2 Mon.Selection]*.	0.0% (0.0 - 300.0%)	592
H2-28 (1548)	Compare2 Up Limit	V/f OLV OLV/PM AOLV/PM EZOLV Sets the upper limit detection level for comparator 2 as a percentage of the full scale analog output for the monitor selected in *H2-26 [Compare2 Mon.Selection]*.	0.0% (0.0 - 300.0%)	592
H2-29 (1549)	Compare2 Hysteresis	V/f OLV OLV/PM AOLV/PM EZOLV Sets the hysteresis level for comparator 2 as a percentage of the full scale analog output for the monitor selected in *H2-26 [Compare2 Mon.Selection]*.	0.0% (0.0 - 10.0%)	592
H2-30 (154A)	Compare2 On-Delay Time	V/f OLV OLV/PM AOLV/PM EZOLV Sets the on-delay time for comparator 2.	0.0 s (0.0 - 600.0 s)	592
H2-31 (154B)	Compare2 Off-Delay Time	V/f OLV OLV/PM AOLV/PM EZOLV Sets the off-delay time for comparator 2.	0.0 s (0.0 - 600.0 s)	592

No. (Hex.)	Name	Description	Default (Range)	Ref.
H2-32 (159A)	Compare1 Filter Time	V/f OLV OLV/PM AOLV/PM EZOLV Sets the time constant that is applied to the primary delay filter used for the analog output of the monitor selected with *H2-20 [Compare1 Mon.Selection]*.	0.0s (0.0 - 10.0 s)	593
H2-33 (159B)	Compare1 Protection Selection	V/f OLV OLV/PM AOLV/PM EZOLV Sets drive operation when it detects *CP1 [Comparator1 Limit Fault]*. 0 : Ramp->Stop 1 : Coast->Stop 2 : Fast Stop (C1-09) 3 : Alarm Only 4 : Low Speed (L8-19)	4 (0 - 4)	593
H2-34 (159C)	Compare2 Filter Time	V/f OLV OLV/PM AOLV/PM EZOLV Sets the time constant that is applied to the primary delay filter used for the analog output of the monitor selected with *H2-26 [Compare2 Mon.Selection]*.	0.0s (0.0 - 10.0 s)	593
H2-35 (159D)	Compare2 Protection Selection	V/f OLV OLV/PM AOLV/PM EZOLV Sets drive operation when it detects *CP2 [Comparator2 Limit Fault]*. 0 : Ramp->Stop 1 : Coast->Stop 2 : Fast Stop (C1-09) 3 : Alarm Only 4 : Low Speed (L8-19)	4 (0 - 4)	593
H2-36 (159E)	Compare1 HoldTime	V/f OLV OLV/PM AOLV/PM EZOLV Sets the length of time that *CP1 [Comparator1 Limit Fault]* is disabled.	0.0 s (0.0 - 1000.0 s)	594
H2-37 (159F)	Compare2 HoldTime	V/f OLV OLV/PM AOLV/PM EZOLV Sets the length of time that *CP2 [Comparator2 Limit Fault]* is disabled.	0.0 s (0.0 - 1000.0 s)	594
H2-40 (0B58)	Mbus 15E0h b0 Output Function	V/f OLV OLV/PM AOLV/PM EZOLV Sets the MFDO for bit 0 of Modbus register 15E0 (Hex.).	F (0 - 1FF)	594
H2-41 (0B59)	Mbus 15E0h b1 Output Function	V/f OLV OLV/PM AOLV/PM EZOLV Sets the MFDO for bit 1 of Modbus register 15E0 (Hex.).	F (0 - 1FF)	594
H2-42 (0B5A)	Mbus 15E0h b2 Output Function	V/f OLV OLV/PM AOLV/PM EZOLV Sets the MFDO for bit 2 of Modbus register 15E0 (Hex.).	F (0 - 1FF)	594
H2-60 (1B46) Expert	NO,NC,CM 2nd Function	V/f OLV OLV/PM AOLV/PM EZOLV Sets the second function for terminal NO/NC-CM. Outputs the logical calculation results of the terminals assigned to functions by *H2-01 [NO,NC,CM FuncSelection]*.	0 (0 - FF)	594
H2-61 (1B47) Expert	NO,NC,CM Logic Operation	V/f OLV OLV/PM AOLV/PM EZOLV Sets the logical operation for the functions set in *H2-01 [NO,NC,CM FuncSelection]* and *H2-60 [NO,NC,CM 2nd Function]*.	1 (1 - 9)	594
H2-62 (1B48) Expert	NO,NC,CM Min ON-Time	V/f OLV OLV/PM AOLV/PM EZOLV Sets the minimum ON time that the drive uses to output the logical calculation results from terminal NO,NC,CM.	0.1 s (0.0 - 25.0 s)	595
H2-63 (1B49) Expert	DO1 2nd Function	V/f OLV OLV/PM AOLV/PM EZOLV Sets the second function for terminal DO1-O1C. Outputs the logical calculation results of the terminals assigned to functions by *H2-02 [DO1-O1C Func Selection]*.	o (0 - FF)	595
H2-64 (1B4A) Expert	DO1 Logic Operation	V/f OLV OLV/PM AOLV/PM EZOLV Sets the logical operation for the functions set in *H2-02 [DO1-O1C Func Selection]* and *H2-63 [DO1 2nd Function]*.	1 (1 - 9)	595
H2-65 (1B4B) Expert	DO1 Min ON-Time	V/f OLV OLV/PM AOLV/PM EZOLV Sets the minimum ON time used to output the logical calculation results from terminal DO1-O1C.	0.1 s (0.0 - 25.0 s)	595
H2-66 (1B4C) Expert	DO2 2nd Function	V/f OLV OLV/PM AOLV/PM EZOLV Sets the second function for terminal DO2-O2C. Outputs the logical calculation results of the terminals assigned to functions by *H2-03 [DO2-O2C Func Selection]*.	0 (0 - FF)	595
H2-67 (1B4D) Expert	DO2 Logic Operation	V/f OLV OLV/PM AOLV/PM EZOLV Sets the logical operation for the functions set in *H2-03 [DO2-O2C Func Selection]* and *H2-66 [DO2 2nd Function]*.	1 (1 - 9)	595
H2-68 (1B4E) Expert	DO2 Min ON-Time	V/f OLV OLV/PM AOLV/PM EZOLV Sets the minimum ON time used to output the logical calculation results from terminal 4NO-4CM.	0.1 s (0.0 - 25.0 s)	595

■ H2-xx: MFDO Function Select

Setting Value	Function	Description	Ref.
0	Through Mode	V/f OLV OLV/PM AOLV/PM EZOLV Use this setting for unused terminals or to use terminals in through mode. Also use this setting as the PLC contact output via Modbus or the communication option. This signal does not function if signals from the PLC are not configured.	596
1	Drive Ready	V/f OLV OLV/PM AOLV/PM EZOLV The terminal activates when the drive is ready and running.	596
2	Drive Enable	V/f OLV OLV/PM AOLV/PM EZOLV This terminal activates when the *H1-xx = 1A [Drive Enable]* terminal activates.	596
3	Fault	V/f OLV OLV/PM AOLV/PM EZOLV The terminal activates when the drive detects a fault. **Note:** The terminal will not activate for *CPF00* and *CPF01 [Control Circuit Error]* faults.	596
4	Alarm	V/f OLV OLV/PM AOLV/PM EZOLV The terminal turns on when the drive detects a minor fault.	596
5	@Run	V/f OLV OLV/PM AOLV/PM EZOLV The terminal activates when the Run command is input and when the drive is outputting voltage. ON : Drive is running OFF : Drive is stopping	596
6	@Reverse	V/f OLV OLV/PM AOLV/PM EZOLV The terminal activates when the motor operates in the reverse direction. ON : The motor is operating in the reverse direction. OFF : The motor is operating in the forward direction or the motor stopped.	597
7	Zero Speed	V/f OLV OLV/PM AOLV/PM EZOLV The terminal activates when the output frequency is less than the value of *E1-09 [Min Output Frequency]* or *b2-01 [ZSpd/DCI Threshold]*. **Note:** Parameter *A1-02 [Control Method]* selects which parameter is the reference. A1-02 Setting / Control Method Selection / Parameter Used as the Reference 0 / V/f Control / *E1-09* 2 / OLVector / *b2-01* 5 / PM OLVector / *E1-09* 6 / PM AOLVector / *E1-09* 8 / EZ Vector / *E1-09* ON : Output frequency < value of *E1-09* or *b2-01*. OFF : Output frequency ≥ value of *E1-09* or *b2-01*.	597
B	@FreqOutput	V/f OLV OLV/PM AOLV/PM EZOLV The terminal activates when the drive outputs frequency. ON : The drive outputs frequency. OFF : The drive does not output frequency.	597
D	LO/RE Status	V/f OLV OLV/PM AOLV/PM EZOLV The terminal activates when the Run command source or frequency reference source is LOCAL. ON : LOCAL OFF : REMOTE	598
E	EDM Safety	V/f OLV OLV/PM AOLV/PM EZOLV The terminal activates (safety stop state) when the safety circuit and safety diagnosis circuit are operating correctly and when terminals H1-HC and H2-HC are OFF (Open). ON : Safety stop state OFF : Safety circuit fault or RUN/READY	598
F	SpeedAgree1	V/f OLV OLV/PM AOLV/PM EZOLV The terminal activates when the output frequency is in the range of the frequency reference ± *L4-02 [SpAgree Det. Width]*. ON : The output frequency is in the range of "frequency reference ± *L4-02*". OFF : The output frequency does not align with the frequency reference although the drive is running.	598
10	USpeedAgree1	V/f OLV OLV/PM AOLV/PM EZOLV The terminal activates when the output frequency is in the range of *L4-01 [SpAgree Det.Level]* ± *L4-02 [SpAgree Det.Width]* and in the range of the frequency reference ± *L4-02*. **Note:** The detection function operates in the two motor rotation directions. The drive uses the *L4-01* value as the forward/reverse detection level. ON : The output frequency is within the range as defined by the result of "*L4-01* ± *L4-02*" and the range of frequency reference ± *L4-02*. OFF : The output frequency is not in the range of "*L4-01* ± *L4-02*" nor the range of frequency reference ± *L4-02*.	599

Setting Value	Function	Description	Ref.
11	SpeedAgree2	V/f OLV OLV/PM AOLV/PM EZOLV The terminal activates when the output frequency is in the range of the frequency reference ± *L4-04 [SpAgree Det. Width(+/-)]*. **Note:** The detection function operates in the two motor rotation directions. ON : The output frequency is in the range of "frequency reference ± *L4-04*". OFF : The output frequency is not in the range of "frequency reference ± *L4-04*".	599
12	USpeedAgree2	V/f OLV OLV/PM AOLV/PM EZOLV The terminal activates when the output frequency is in the range of *L4-03 [SpAgree Det.Level(+/-)]* ± *L4-04 [SpAgree Det.Width(+/-)]* and in the range of the frequency reference ± *L4-04*. **Note:** The detection level set with *L4-03* is a signed value. The drive will only detect in one direction. ON : The output frequency is in the range of "*L4-03* ± *L4-04*" and the range of frequency reference ± *L4-04*. OFF : The output frequency is not in the range of "*L4-03* ± *L4-04*" nor the range of frequency reference ± *L4-04*.	600
13	FreqDetect 1	V/f OLV OLV/PM AOLV/PM EZOLV The terminal deactivates when the output frequency is higher than the value of *L4-01 [SpAgree Det.Level]* + *L4-02 [SpAgree Det.Width]*. After the terminal turns off, the terminal continues to remain off until the output frequency reaches the level set with *L4-01*. **Note:** The detection function operates in the two motor rotation directions. The drive uses the *L4-01* value as the forward/reverse detection level. ON : The output frequency is less than the value of *L4-01* or does not exceed the value of *L4-01* + *L4-02*. OFF : The output frequency is higher than the value of *L4-01* + *L4-02*.	600
14	FreqDetect 2	V/f OLV OLV/PM AOLV/PM EZOLV The terminal activates when the output frequency is higher than the value of *L4-01 [SpAgree Det.Level]*. After the terminal activates, the terminal stays activated until the output frequency is at the value of *L4-01* - *L4-02*. **Note:** The detection function operates in the two motor rotation directions. The drive uses the *L4-01* value as the forward/reverse detection level. ON : The output frequency is higher than the value of *L4-01*. OFF : The output frequency is less than the value of "*L4-01* - *L4-02*," or it does not exceed the value of *L4-01*.	601
15	FreqDetect 3	V/f OLV OLV/PM AOLV/PM EZOLV The terminal deactivates when the output frequency is higher than the value of "*L4-03 [SpAgree Det.Level(+/-)]* + *L4-04 [SpAgree Det.Width(+/-)]*". After the terminal deactivates, the terminal stays deactivated until the output frequency is at the value of *L4-03*. **Note:** The detection level set with *L4-03* is a signed value. The drive will only detect in one direction. ON : The output frequency is less than the value of *L4-03* or does not exceed the value of *L4-03* + *L4-04*. OFF : The output frequency is higher than the value of *L4-03* + *L4-04*.	601
16	FreqDetect 3	V/f OLV OLV/PM AOLV/PM EZOLV The terminal activates when the output frequency is higher than the value of *L4-03 [SpAgree Det.Level(+/-)]*. After the terminal activates, the terminal stays activated until the output frequency is at the value of *L4-03* - *L4-04*. **Note:** The detection level set with *L4-03* is a signed value. The drive will only detect in one direction. ON : The output frequency is higher than the value of *L4-03*. OFF : The output frequency is less than the value of "*L4-03* - *L4-04*," or it does not exceed the value of *L4-03*.	602
17	@Fast Stop	V/f OLV OLV/PM AOLV/PM EZOLV The terminal activates when the fast stop is in operation.	602
18	@KEBridethru	V/f OLV OLV/PM AOLV/PM EZOLV The activates during KEB Ride-Thru.	602
19	@ShortCBraking	V/f OLV OLV/PM AOLV/PM EZOLV The terminal activates during Short Circuit Braking. **Note:** When *A1-02 = 8 [Control Method = EZ Vector]*, this function is available when you use a PM motor.	602
1A	@BaseblockNO	V/f OLV OLV/PM AOLV/PM EZOLV The terminal turns on during baseblock. When the drive is in baseblock, the drive output transistor stops switching and does not make DC bus voltage. ON : During baseblock OFF : The drive is not in baseblock.	603
1B	@BaseblockNC	V/f OLV OLV/PM AOLV/PM EZOLV The terminal deactivates during baseblock. When the drive is in baseblock, the drive output transistor stops switching and does not make DC bus voltage. ON : The drive is not in baseblock. OFF : During baseblock	603
1C	FreqRefSource	V/f OLV OLV/PM AOLV/PM EZOLV Shows the selected frequency reference source. ON : The keypad is the frequency reference source. OFF : Parameter *b1-01 or b1-15 [Freq. Ref. Sel. 1 or Freq. Ref. Sel. 2]* is the frequency reference source.	603

Setting Value	Function	Description	Ref.
1D	RunCmdSource	V/f OLV OLV/PM AOLV/PM EZOLV Shows the selected Run command source. ON : The keypad is the Run command source. OFF : Parameter *b1-02* or *b1-16* [Run Comm. Sel 1 or Run Comm. Sel 2] is the Run command source.	603
1E	Motor2 Select	V/f OLV OLV/PM AOLV/PM EZOLV The terminal activates when motor 2 is selected. ON : Motor 2 Selection OFF : Motor 1 Selection	603
1F	Restart Enable	V/f OLV OLV/PM AOLV/PM EZOLV The terminal activates when the Auto Restart function is trying to restart after a fault.	603
20	FltReset Active	V/f OLV OLV/PM AOLV/PM EZOLV The terminal turns on when the drive receives the Reset command from the control circuit terminal, serial communications, or the communication option.	604
21	PolePos Detection	V/f OLV OLV/PM AOLV/PM EZOLV The terminal activates when drive receives a Run command and the drive detects the motor magnetic pole position of the PM motor.	604
22	Ext 24V Supply	V/f OLV OLV/PM AOLV/PM EZOLV The terminal activates when there is an external 24V power supply between terminals E24V-A0V. ON : An external 24V power supply supplies power. OFF : An external 24V power supply does not supply power.	604
2F	@SpeedSearch	V/f OLV OLV/PM AOLV/PM EZOLV The terminal activates when the drive is doing speed search.	604
30	During Torque Limit	V/f OLV OLV/PM AOLV/PM EZOLV The terminal activates when the torque reference is the torque limit set with *L7 parameters* or *H3-02 or H3-10 [MFAI Function Select]*.	604
32	TrqDetect1NO	V/f OLV OLV/PM AOLV/PM EZOLV The terminal activates when the drive detects overtorque or undertorque. ON : The output current/torque is more than the torque value set with *L6-02 [Trq Det1 Level]*, or the level is less than the torque value set with *L6-02* for longer than the time set with *L6-03 [Trq Det1 Time]*.	604
33	TrqDetect1NC	V/f OLV OLV/PM AOLV/PM EZOLV The terminal deactivates when the drive detects overtorque or undertorque. OFF : The output current/torque is more than the torque value set with *L6-02 [Trq Det1 Level]*, or the level is less than the torque value set with *L6-02* for longer than the time set with *L6-03 [Trq Det1 Time]*.	604
37	TrqDetect2NO	V/f OLV OLV/PM AOLV/PM EZOLV The terminal activates when the drive detects overtorque or undertorque. ON : The output current/torque is more than the torque value set with *L6-05 [Trq Det2 Level]*, or the level is less than the torque value set with *L6-05* for longer than the time set with *L6-06 [Trq Det2 Time]*.	605
38	TrqDetect2NC	V/f OLV OLV/PM AOLV/PM EZOLV The terminal deactivates when the drive detects overtorque or undertorque. OFF : The output current/torque is more than the torque value set with *L6-05 [Torque Detection Level 2]*, or the level is less than the torque value set with *L6-05 [Torque Detection Level 2]* for longer than the time set with *L6-06 [Torque Detection Time 2]*.	605
39	Timer Output	V/f OLV OLV/PM AOLV/PM EZOLV Use this setting when the drive uses the timer function as an output terminal.	605
3C	Comparator 1	V/f OLV OLV/PM AOLV/PM EZOLV The terminal activates if the monitor value set with *H2-20 [Compare1 Mon.Selection]* is in range of the values of *H2-21 [Compare1 Low Limit] and H2-22 [Compare1 Up Limit]* for the time set in *H2-24 [Compare1 On-Delay Time]*.	605
3D	Comparator 2	V/f OLV OLV/PM AOLV/PM EZOLV The terminal activates if the monitor value set with *H2-26 [Compare2 Mon.Selection]* is not in the range of the values of *H2-27 [Compare2 Low Limit]* and *H2-28 [Compare2 Up Limit]* for the time set in *H2-30 [Compare2 On-Delay Time]*.	606
3E	PID Fbk Low	V/f OLV OLV/PM AOLV/PM EZOLV The terminal activates when the drive detects *FbL [PID Feedback Loss]*.	606
3F	PID Fbk High	V/f OLV OLV/PM AOLV/PM EZOLV The terminal activates when the drive detects *FbH [Excessive PID Feedback]*.	606
4A	DC Bus Undervolt	V/f OLV OLV/PM AOLV/PM EZOLV The terminal activates when the DC bus voltage or control circuit power supply is less than the voltage set with *L2-05 [UV Detection Lvl (Uv1)]*. The terminal also turns on when there is a fault with the DC bus voltage. ON : The DC bus voltage is less than the setting value of *L2-05*. OFF : The DC bus voltage is more than the setting value of *L2-05*.	607
4B	FreqRef Loss	V/f OLV OLV/PM AOLV/PM EZOLV The terminal activates when the drive detects a loss of frequency reference.	607
4C	BrkRes Fault	V/f OLV OLV/PM AOLV/PM EZOLV The terminal activates when the mounting-type braking resistor is overheating or when there is a braking transistor fault.	607

Setting Value	Function	Description	Ref.
4D	Motor OL1	V/f OLV OLV/PM AOLV/PM EZOLV The terminal activates when the electronic thermal protection value of the motor overload protective function is a minimum of 90% of the detection level.	607
4E	Drive PreOH	V/f OLV OLV/PM AOLV/PM EZOLV The terminal activates when the drive heatsink temperature is at the level set with *L8-02 [Overheat Alm Level]*.	607
4F	PreOHTimeLim	V/f OLV OLV/PM AOLV/PM EZOLV The terminal activates when *L8-03 = 4 [Overheat Pre-Alarm Selection = Run@L8-19 Rate]* and *oH [Heatsink Overheat]* does not clear after the drive decreases the frequency for 10 cycles.	607
60	BrkTransFault	V/f OLV OLV/PM AOLV/PM EZOLV The terminal activates when the internal braking transistor overheats and the drive detects an *rr [Dynamic Braking Transistor Fault]* fault.	607
61	BrkTransOH	V/f OLV OLV/PM AOLV/PM EZOLV The terminal activates when the braking resistor overheats and the drive detects an *rH [Braking Resistor Overheat]* fault.	608
63	Maintenance	V/f OLV OLV/PM AOLV/PM EZOLV The terminal activates when drive components are at their estimated maintenance period. Tells the user about the maintenance period for these items: • IGBT • Cooling fan • Capacitor • Soft charge bypass relay	608
65	WattH Pulse	V/f OLV OLV/PM AOLV/PM EZOLV Outputs the pulse that shows the watt hours.	608
66	MechWeakDetect	V/f OLV OLV/PM AOLV/PM EZOLV The terminal activates when the drive detects mechanical weakening.	608
67	ModbusReg 1	V/f OLV OLV/PM AOLV/PM EZOLV The terminal activates when the bit specified by *H2-08 [Mbus Reg1 Bit Select]* for the Modbus register address set with *H2-07 [Mbus Reg1 Address Select]* activates.	608
69	ModbusReg 2	V/f OLV OLV/PM AOLV/PM EZOLV The terminal activates when the bit specified by *H2-10 [Mbus Reg2 Bit Select]* for the Modbus register address set with *H2-09 [Mbus Reg2 Address Select]* activates.	608
6A	DataLog Error	V/f OLV OLV/PM AOLV/PM EZOLV The terminal activates when the drive detects *LoG [Com Error / Abnormal SD card]*.	608
90 - 92	Q2pack DO1 to 3	V/f OLV OLV/PM AOLV/PM EZOLV Sets the Q2pack digital output. Refer to the Q2pack online manual for more information.	609
100 - 192	Inverse output of 0 to 92	V/f OLV OLV/PM AOLV/PM EZOLV Causes inverse output of the function for the selected MFDO. Uses the last two digits of 1xx to select which function to inversely output.	609

◆ H3: ANALOG INPUTS

No. (Hex.)	Name	Description	Default (Range)	Ref.
H3-01 (0410)	AI1 Signal Level Select	V/f OLV OLV/PM AOLV/PM EZOLV Sets the input signal level for MFAI terminal AI1. 0 : 0 to 10V (Lower Limit at 0) 1 : 0 to +10 V (Without Lower Limit)	0 (0, 1)	611
H3-02 (0434)	AI1 Function Selection	V/f OLV OLV/PM AOLV/PM EZOLV Sets the function for MFAI terminal AI1.	0 (0 - 32)	611
H3-03 (0411) RUN	AI1 Gain Setting	V/f OLV OLV/PM AOLV/PM EZOLV Sets the gain of the analog signal input to MFAI terminal AI1.	100.0% (-999.9 - +999.9%)	611
H3-04 (0412) RUN	AI1 Bias Setting	V/f OLV OLV/PM AOLV/PM EZOLV Sets the bias of the analog signal input to MFAI terminal AI1.	0.0% (-999.9 - +999.9%)	611
H3-09 (0417)	AI2 Signal Level Select	V/f OLV OLV/PM AOLV/PM EZOLV Sets the input signal level for MFAI terminal AI2. 0 : 0 to 10V (Lower Limit at 0) 1 : 0 to +10V (Without Lower Limit) 2 : 4 to 20 mA 3 : 0 to 20 mA	2 (0 - 3)	612
H3-10 (0418)	AI2 Function Selection	V/f OLV OLV/PM AOLV/PM EZOLV Sets the function for MFAI terminal AI2.	0 (0 - 32)	612

No. (Hex.)	Name	Description	Default (Range)	Ref.
H3-11 (0419) RUN	AI2 Gain Setting	V/f OLV OLV/PM AOLV/PM EZOLV Sets the gain of the analog signal input to MFAI terminal AI2.	100.0% (-999.9 - +999.9%)	612
H3-12 (041A) RUN	AI2 Bias Setting	V/f OLV OLV/PM AOLV/PM EZOLV Sets the bias of the analog signal input to MFAI terminal AI2.	0.0% (-999.9 - +999.9%)	612
H3-13 (041B)	An.In FilterTime Constant	V/f OLV OLV/PM AOLV/PM EZOLV Sets the time constant for primary delay filters on MFAI terminals.	0.03 s (0.00 - 2.00 s)	612
H3-14 (041C)	An.In Term.Enable Sel	V/f OLV OLV/PM AOLV/PM EZOLV Sets the enabled terminal or terminals when *H1-xx = 12 [MFDI Function Select = AI Input Sel]* is ON. 1 : AI1 only 2 : AI2 only 3 : AI1 and AI2	3 (1, 2, 3)	613
H3-16 (02F0)	AI1 Offset	V/f OLV OLV/PM AOLV/PM EZOLV Sets the offset level for analog signals input to terminal AI1. Usually it is not necessary to change this setting.	0 (-500 - +500)	613
H3-17 (02F1)	AI2 Offset	V/f OLV OLV/PM AOLV/PM EZOLV Sets the offset level for analog signals input to terminal AI2. Usually it is not necessary to change this setting.	0 (-500 - +500)	613
H3-40 (0B5C)	15C1h Input Function	V/f OLV OLV/PM AOLV/PM EZOLV Sets the Modbus AI1 function.	0 (0, 3, 6 - 2F)	613
H3-41 (0B5F)	15C2h Input Function	V/f OLV OLV/PM AOLV/PM EZOLV Sets the Modbus AI2 function.	0 (0, 3, 6 - 2F)	613
H3-42 (0B62)	15C3h Input Function	V/f OLV OLV/PM AOLV/PM EZOLV Sets the Modbus AI3 function.	0 (0, 3, 6 - 2F)	614
H3-43 (117F)	Mbus In FilterTime Const	V/f OLV OLV/PM AOLV/PM EZOLV Sets the time constant to apply a primary delay filter to the Modbus analog input terminal.	0.00 s (0.00 - 2.00 s)	614

■ H3-xx: MFAI Function Select

Setting Value	Function	Description	Ref.
0	Through Mode	V/f OLV OLV/PM AOLV/PM EZOLV Use this setting for unused terminals or to use terminals in through mode.	614
1	AuxFreqRef1	V/f OLV OLV/PM AOLV/PM EZOLV Sets Reference 2 through multi-step speed reference to enable the command reference (Auxiliary Frequency Reference 1) from the analog input terminal set here. This value is a percentage where the Maximum Output Frequency setting is a setting value of 100%. **Note:** Parameter *A1-02 [Control Method]* selects which parameter is the maximum output frequency. • *A1-02 ≠ 8 [EZ Vector]*: *E1-04 [Max Output Frequency]* • *A1-02 = 8*: *E9-02 [Maximum Speed]*	614
2	AuxFreqRef2	V/f OLV OLV/PM AOLV/PM EZOLV Sets Reference 3 through multi-step speed reference to enable the command reference (Auxiliary Frequency Reference 2) from the analog input terminal set here. This value is a percentage where the Maximum Output Frequency setting is a setting value of 100%. **Note:** Parameter *A1-02 [Control Method]* selects which parameter is the maximum output frequency. • *A1-02 ≠ 8 [EZ Vector]*: *E1-04 [Max Output Frequency]* • *A1-02 = 8*: *E9-02 [Maximum Speed]*	614
3	FrqBIAS Frq	V/f OLV OLV/PM AOLV/PM EZOLV Enters the bias value added to the frequency reference as a percentage of the maximum output frequency. **Note:** Parameter *A1-02 [Control Method]* selects which parameter is the maximum output frequency. • *A1-02 ≠ 8 [EZ Vector]*: *E1-04 [Max Output Frequency]* • *A1-02 = 8*: *E9-02 [Maximum Speed]*	614
4	Freq Ref/BIAS	V/f OLV OLV/PM AOLV/PM EZOLV The input value from the MFAI terminal set with this function becomes the master frequency reference.	614
5	Freq Gain	V/f OLV OLV/PM AOLV/PM EZOLV The drive multiplies the analog frequency reference with the input value from the MFAI set with this function.	615
6	Output Voltage Bias	V/f OLV OLV/PM AOLV/PM EZOLV Set this parameter to input a bias signal to amplify the output voltage.	615
7	TorqCompensation	V/f OLV OLV/PM AOLV/PM EZOLV Enters the torque compensation value if the motor rated torque is 100%.	615

Setting Value	Function	Description	Ref.
8	TorqRef/Lim	V/f OLV OLV/PM AOLV/PM EZOLV Enters the torque reference if the motor rated torque is 100%. This setting is the torque limit for speed control.	615
9	FW Trq Lim	V/f OLV OLV/PM AOLV/PM EZOLV Enters the forward torque limit if the motor rated torque is 100%.	615
B	Rev Trq Lim	V/f OLV OLV/PM AOLV/PM EZOLV Enters the load torque limit if the motor rated torque is 100%.	617
C	RegenTrqLim	V/f OLV OLV/PM AOLV/PM EZOLV Enters the regenerative torque limit if the motor rated torque is 100%.	617
D	GenerTrqLim	V/f OLV OLV/PM AOLV/PM EZOLV Enters the torque limit that is the same for all quadrants for forward, reverse, and regenerative operation if the motor rated torque is 100%.	617
E	OvUntrq Level	V/f OLV OLV/PM AOLV/PM EZOLV Enters a signal to adjust the overtorque/undertorque detection level. **Note:** Use this function with *L6-01 [Torque Detection Selection 1]*. This parameter functions as an alternative to *L6-02 [Torque Detection Level 1]*.	617
F	PID Fbk	V/f OLV OLV/PM AOLV/PM EZOLV Enter the PID feedback value as a percentage of the maximum output frequency. **Note:** Parameter *A1-02 [Control Method]* selects which parameter is the maximum output frequency. • *A1-02 ≠ 8 [EZ Vector]*: *E1-04 [Max Output Frequency]* • *A1-02 = 8*: *E9-02 [Maximum Speed]*	617
10	PID SetPoint	V/f OLV OLV/PM AOLV/PM EZOLV Enters the PID setpoint as a percentage of the maximum output frequency. **Note:** Parameter *A1-02 [Control Method]* selects which parameter is the maximum output frequency. • *A1-02 ≠ 8 [EZ Vector]*: *E1-04 [Max Output Frequency]* • *A1-02 = 8*: *E9-02 [Maximum Speed]*	617
11	Diff PIDFbk	V/f OLV OLV/PM AOLV/PM EZOLV Enters the PID differential feedback value if the full scale analog signal (10 V or 20 mA) is 100%.	617
12	AcDcTimeGain	V/f OLV OLV/PM AOLV/PM EZOLV Enters a signal to adjust the gain used for *C1-01 to C1-08 [Acceleration/Deceleration Times 1 to 4]* and *C1-09 [Fast Stop Time]* when the full scale analog signal (10 V or 20 mA) is 100%.	618
13	DCInjBrakCurr	V/f OLV OLV/PM AOLV/PM EZOLV Enters a signal to adjust the current level used for DC Injection Braking when the drive rated output current is 100%.	618
14	StallPLev@Rn	V/f OLV OLV/PM AOLV/PM EZOLV Enters a signal to adjust the stall prevention level during run if the drive rated current is 100%.	618
15	OutFLowLimSel	V/f OLV OLV/PM AOLV/PM EZOLV Enters a signal to adjust the output frequency lower limit level as a percentage of the maximum output frequency. **Note:** Parameter *A1-02 [Control Method]* selects which parameter is the maximum output frequency. • *A1-02 ≠ 8 [EZ Vector]*: *E1-04 [Max Output Frequency]* • *A1-02 = 8*: *E9-02 [Maximum Speed]*	619
16	Mot PTC Input	V/f OLV OLV/PM AOLV/PM EZOLV Uses the motor Positive Temperature Coefficient (PTC) thermistor to prevent heat damage to the motor as a percentage of the current value when the 10 V analog signal is input.	619
30	Q2pack AI1	V/f OLV OLV/PM AOLV/PM EZOLV Use with Q2pack. Refer to the Q2pack online manual for more information.	619
31	Q2pack AI2	V/f OLV OLV/PM AOLV/PM EZOLV Use with Q2pack. Refer to the Q2pack online manual for more information.	619

◆ H4: ANALOG OUTPUTS

No. (Hex.)	Name	Description	Default (Range)	Ref.
H4-01 (041D)	AO An.Out Select	V/f OLV OLV/PM AOLV/PM EZOLV Sets the monitoring number to be output from the MFAO terminal AO. Set the *x-xx* part of the *Ux-xx [Monitor]*. For example, set *H4-01 = 102* to monitor *U1-02 [Output Frequency]*.	102 (000 - 999)	620
H4-02 (041E) RUN	AO An.Out Gain	V/f OLV OLV/PM AOLV/PM EZOLV Sets the gain of the monitor signal that is sent from MFAO terminal AO. Sets the analog signal output level from the terminal AO at 10 V or 20 mA as 100% when an output for monitoring items is 100%.	100.0% (-999.9 - +999.9%)	620

No. (Hex.)	Name	Description	Default (Range)	Ref.
H4-03 (041F) RUN	AO An.Out Bias	V/f OLV OLV/PM AOLV/PM EZOLV Sets the bias of the monitor signal that is sent from MFAO terminal AO. When an output for monitoring items is 0%, this parameter sets the analog signal output level from the AO terminal at 10 V or 20 mA as 0%.	0.0% (-999.9 - +999.9%)	621
H4-07 (0423)	AO Signal Level Select	V/f OLV OLV/PM AOLV/PM EZOLV Sets the MFAO terminal AO output signal level. **Note:** Make sure that you set jumper S5 on the control circuit terminal board when you change these parameters. 1 : 0 to 10 Vdc 3 : 4 to 20 mA	1 (1, 3)	621
H4-20 (0B53)	An.Pwr Mon 100% Level	V/f OLV OLV/PM AOLV/PM EZOLV Sets the level at 10 V when *U1-08 [Output Power]* is set for analog output.	0.00 kW (0.00 - 650.00 kW)	621

◆ H5: MODBUS PORTS

No. (Hex.)	Name	Description	Default (Range)	Ref.
H5-01 (0425)	Mbus Address	V/f OLV OLV/PM AOLV/PM EZOLV Sets the communication slave address for drives. **Note:** • Restart the drive after changing the parameter setting. • Setting 0 will not let the drive respond to Modbus communications.	1FH (0 - FFH)	621
H5-02 (0426)	Mbus BaudRate	V/f OLV OLV/PM AOLV/PM EZOLV Sets the communications speed for Modbus communications. **Note:** Restart the drive after changing the parameter setting. 1 : 1200 bps 2 : 2400 bps 3 : 4800 bps 4 : 9600 bps 5 : 19.2 kbps 6 : 38.4 kbps 7 : 57.6 kbps 8 : 76.8 kbps 9 : 115.2 kbps	4 (1 - 9)	622
H5-03 (0427)	Mbus Parity	V/f OLV OLV/PM AOLV/PM EZOLV Sets the communications parity used for Modbus communications. **Note:** Restart the drive after changing the parameter setting. 1 : Even parity 2 : Odd parity 3 : No parity	1 (1 - 3)	622
H5-04 (0428)	Mbus Error Stop	V/f OLV OLV/PM AOLV/PM EZOLV Sets the motor Stopping Method when the drive detects *CE [Modbus Communication Err]* issues. 0 : Ramp->Stop 1 : Coast->Stop 2 : Fast Stop (C1-09) 3 : Alarm Only	3 (0 - 3)	622
H5-05 (0429)	Mbus Fault Detection Selection	V/f OLV OLV/PM AOLV/PM EZOLV Sets the function that detects *CE [Modbus Communication Error]* issues during Modbus communications. 0 : Disabled 1 : Enabled	1 (0, 1)	622
H5-06 (042A)	Mbus Tx Wait Time	V/f OLV OLV/PM AOLV/PM EZOLV Sets the time to wait to send a response message after the drive receives a command message from the master. **Note:** Restart the drive after changing the parameter setting.	5 ms (0 - 65 ms)	623
H5-09 (0435)	Mbus CE Detect Time	V/f OLV OLV/PM AOLV/PM EZOLV Sets the detection time for *CE [Modbus Communication Error]* issues when communication stops.	2.0 s (0.0 - 25.0 s)	623
H5-10 (0436)	Mbus 0025H Unit Sel	V/f OLV OLV/PM AOLV/PM EZOLV Sets the unit of measure used for the Modbus communications monitor register 0025H (output voltage reference monitor). 0 : 0.1 V units 1 : 1 V units	0 (0, 1)	623

No. (Hex.)	Name	Description	Default (Range)	Ref.
H5-11 (043C) RUN	Mbus ENTER Command Mode	V/f OLV OLV/PM AOLV/PM EZOLV Sets the function to make the Enter command necessary to change parameters through Modbus communications. 0 : Enter Required 1 : No Enter Required	0 (0, 1)	623
H5-12 (043D)	Mbus Run Command Method Sel	V/f OLV OLV/PM AOLV/PM EZOLV Sets the input method for the Run command when *b1-02 = 2 [Run Comm. Sel 1 = Modbus]* or *b1-16 = 2 [Run Comm. Sel 2 = Modbus]*. 0 : F/ST R/ST 1 : RUN/ST F/R	0 (0, 1)	624
H5-17 (11A1) Expert	ENTER@CPU Busy Response	V/f OLV OLV/PM AOLV/PM EZOLV Sets operation when the EEPROM write command is sent without EEPROM write available. Usually it is not necessary to change this setting. 1 : Ignore (No Write) 2 : Write RAM Only	0 (0, 1)	624
H5-18 (11A2)	Mbus Speed Filter over Comms	V/f OLV OLV/PM AOLV/PM EZOLV Sets the filter time constant used when monitoring motor speed during Modbus communications or with a communication option.	0 ms (0 - 100 ms)	624
H5-20 (0B57)	Mbus Par Reload Mode	V/f OLV OLV/PM AOLV/PM EZOLV Sets the function to immediately enable updated Modbus communications parameters. 1 : Reload@Power Cycle 2 : Reload Now	1 (1, 2)	624
H5-22 (11CF)	Mbus SpdSrch Command	V/f OLV OLV/PM AOLV/PM EZOLV Enables the Modbus communication register Speed Search function (bit0 of 15DFH). 0 : Disabled 1 : Enabled	0 (0, 1)	625
H5-25 (1589) RUN	Mbus 5A Reg1 Selection	V/f OLV OLV/PM AOLV/PM EZOLV Returns the contents of the specified Modbus communications register when responding to the master device.	0044H (U1-05) (0000H - FFFFH)	625
H5-26 (158A) RUN	Mbus 5A Reg2 Selection	V/f OLV OLV/PM AOLV/PM EZOLV Returns the contents of the specified Modbus communications register when responding to the master device.	0045H (U1-06) (0000H - FFFFH)	625
H5-27 (158B) RUN	Mbus 5A Reg3 Selection	V/f OLV OLV/PM AOLV/PM EZOLV Returns the contents of the specified Modbus communications register when responding to the master device.	0042H (U1-03) (0000H - FFFFH)	625
H5-28 (158C) RUN	Mbus 5A Reg4 Selection	V/f OLV OLV/PM AOLV/PM EZOLV Returns the contents of the specified Modbus communications register when responding to the master device.	0049H (U1-10) (0000H - FFFFH)	625

◆ H6: PULSE INPUT OUTPUT

No. (Hex.)	Name	Description	Default (Range)	Ref.
H6-01 (042C)	PI Pulse Train Function	V/f OLV OLV/PM AOLV/PM EZOLV Sets the function for pulse train input terminal PI. 0 : Freq Ref 1 : PIDFbk Value 2 : PID SP Value 3 : PG Feedback	0 (0 - 3)	626
H6-02 (042D) RUN	PI Frequency Scale	V/f OLV OLV/PM AOLV/PM EZOLV Sets the frequency of the pulse train input signal used when the item selected with *H6-01 [PI Pulse Train Function]* is input at 100%.	1440 Hz (100 - 32000 Hz)	627
H6-03 (042E) RUN	PI Function Gain	V/f OLV OLV/PM AOLV/PM EZOLV Sets the gain used when the function in *H6-01 [PI Pulse Train Function]* is input to terminal PI.	100.0% (0.0 - 1000.0%)	627
H6-04 (042F) RUN	PI Function Bias	V/f OLV OLV/PM AOLV/PM EZOLV Sets the bias used when the function in *H6-01 [PI Pulse Train Function]* is input to terminal PI. Sets a value at the time when the pulse train is 0 Hz.	0.0% (-100.0 - 100.0%)	627
H6-05 (0430) RUN	PI Filter Time	V/f OLV OLV/PM AOLV/PM EZOLV Sets the time constant for the pulse train input primary delay filters.	0.10 s (0.00 - 2.00 s)	627

No. (Hex.)	Name	Description	Default (Range)	Ref.
H6-06 (0431) RUN	PO Mon.Selection	V/f OLV OLV/PM AOLV/PM EZOLV Sets a function for pulse train monitor output terminal PO. Sets the "x-xx" part of the *Ux-xx* monitor.	102 (000, 031, 101, 102, 105, 116, 501, 502, 801 - 809, 821 - 825, 831 - 839, 851 - 855)	627
H6-07 (0432) RUN	PO Freq.Scaling	V/f OLV OLV/PM AOLV/PM EZOLV Sets the frequency of the pulse train output signal used when the monitor set with *H6-06 [PO Mon.Selection]* is 100%.	1440 Hz (0 - 32000 Hz)	628
H6-08 (043F)	PI Minimum Frequency	V/f OLV OLV/PM AOLV/PM EZOLV Sets the minimum frequency of the pulse train signal that terminal PI can detect.	0.5 Hz (0.1 - 1000.0 Hz)	628
H6-09 (156E)	PO Volt.PhaseSync Selection	V/f OLV OLV/PM AOLV/PM EZOLV Set whether to output the pulse synchronized with drive output voltage phase from the pulse train monitor output terminal PO. This parameter is only enabled when *H6-06 = 102 [PO Mon.Selection = Output Frequency]* and *H6-07 = 0 [PO Freq.Scaling = 0 Hz]*. 0 : Disabled 1 : Enabled	0 (0, 1)	628

◆ H7: VIRTUAL INPUT OUTPUT

No. (Hex.)	Name	Description	Default (Range)	Ref.
H7-00 (116F) Expert	Virtual MFIO Selection	V/f OLV OLV/PM AOLV/PM EZOLV Sets the function to enable and disable the virtual I/O function. Set this parameter to 1 to operate the virtual I/O function. 0 : Disabled 1 : Enabled	0 (0, 1)	629
H7-01 (1185) Expert	Virtual In1 Select Function	V/f OLV OLV/PM AOLV/PM EZOLV Sets the function that enters the virtual input set in *H7-10 [Virtual Out1 Select Function]*.	0 (0 - 4, 6 - 19F)	629
H7-02 (1186) Expert	Virtual In2 Select Function	V/f OLV OLV/PM AOLV/PM EZOLV Sets the function that enters the virtual input set in *H7-12 [Virtual Out2 Select Function]*.	0 (0 - 4, 6 - 19F)	629
H7-03 (1187) Expert	Virtual In3 Select Function	V/f OLV OLV/PM AOLV/PM EZOLV Sets the function that enters the virtual input set in *H7-14 [Virtual Out3 Select Function]*.	0 (0 - 4, 6 - 19F)	629
H7-04 (1188) Expert	Virtual In4 Select Function	V/f OLV OLV/PM AOLV/PM EZOLV Sets the function that enters the virtual input set in *H7-16 [Virtual Out4 Select Function]*.	0 (0 - 4, 6 - 19F)	630
H7-10 (11A4) Expert	Virtual Out1 Select Function	V/f OLV OLV/PM AOLV/PM EZOLV Sets the function for virtual digital output 1.	0 (0 - 1A7)	630
H7-11 (11A5) Expert	Virtual Out1 Delay Time	V/f OLV OLV/PM AOLV/PM EZOLV Sets the minimum ON time for virtual digital output 1.	0.1 s (0.0 - 25.0 s)	630
H7-12 (11A6) Expert	Virtual Out2 Select Function	V/f OLV OLV/PM AOLV/PM EZOLV Sets the function for virtual digital output 2.	0 (0 - 1A7)	630
H7-13 (11A7) Expert	Virtual Out2 Delay Time	V/f OLV OLV/PM AOLV/PM EZOLV Sets the minimum ON time for virtual digital output 2.	0.1 s (0.0 - 25.0 s)	630
H7-14 (11A8) Expert	Virtual Out3 Select Function	V/f OLV OLV/PM AOLV/PM EZOLV Sets the function for virtual digital output 3.	0 (0 - 1A7)	630
H7-15 (11A9) Expert	Virtual Out3 Delay Time	V/f OLV OLV/PM AOLV/PM EZOLV Sets the minimum ON time for virtual digital output 3.	0.1 s (0.0 - 25.0 s)	630
H7-16 (11AA) Expert	Virtual Out4 Select Function	V/f OLV OLV/PM AOLV/PM EZOLV Sets the function for virtual digital output 4.	0 (0 - 1A7)	630
H7-17 (11AB) Expert	Virtual Out4 Delay Time	V/f OLV OLV/PM AOLV/PM EZOLV Sets the minimum ON time for virtual digital output 4.	0.1 s (0.0 - 25.0 s)	631

No. (Hex.)	Name	Description	Default (Range)	Ref.
H7-30 (1177) Expert	Virtual AIn Select Function	V/f OLV **OLV/PM** AOLV/PM EZOLV Sets the virtual analog input function.	0 (0 - 32)	631
H7-31 (1178) RUN Expert	Virtual AIn Gain	V/f OLV **OLV/PM** AOLV/PM EZOLV Sets the virtual analog input gain.	100.0% (-999.9 - 999.9%)	631
H7-32 (1179) RUN Expert	Virtual AIn Bias	V/f OLV **OLV/PM** AOLV/PM EZOLV Sets the virtual analog input bias.	0.0% (-999.9 - 999.9%)	631
H7-40 (1163)	Virtual AOut Enable	V/f OLV **OLV/PM** AOLV/PM EZOLV Sets the signal level of the virtual analog output. 1 : 0 to 100% (Absolute Value) 2 : -100 to 100% 3 : 0 to 100% (Lower Limit at 0)	1 (1 - 3)	631
H7-41 (1164)	Virtual AOut Select Function	V/f OLV **OLV/PM** AOLV/PM EZOLV Sets the monitor to be output from the virtual analog output. Set the *x-xx* part of the *Ux-xx [Monitor]*. For example, set *H7-41 = 102* to monitor *U1-02 [Output Frequencyy]*.	102 (0 - 999)	631
H7-42 (1165)	Virtual AOut Filter Time	V/f OLV **OLV/PM** AOLV/PM EZOLV Sets the time constant for a primary filter of the virtual analog output.	0.00 s (0.00 - 2.00 s)	631

11.10 L: PROTECTION

◆ L1: MOTOR PROTECTION

No. (Hex.)	Name	Description	Default (Range)	Ref.
L1-01 (0480)	Motor Cool Type for OL1 Calc	V/f OLV OLV/PM AOLV/PM EZOLV Sets the motor overload protection with electronic thermal protectors. 0 : Disabled 1 : VTorque 2 : CT 10:1 Speed Range 3 : CT 100:1 SpeedRange 4 : PM VTorque 5 : PM CTorque 6 : VT (50Hz) **Note:** When only one motor is connected to a drive, set *L1-01 ≠ 0 [Disabled]*. External thermal relays are not necessary in these conditions.	Determined by A1-02 (0 - 6)	632
L1-02 (0481)	OL1 Protect Time	V/f OLV OLV/PM AOLV/PM EZOLV Sets the operation time for the electronic thermal protector of the drive to prevent damage to the motor. Usually it is not necessary to change this setting.	1.0 min (0.1 - 5.0 min)	635
L1-03 (0482)	Motor oH AL Reaction Select	V/f OLV OLV/PM AOLV/PM EZOLV Sets drive operation when the PTC input signal entered into the drive is at the *oH3 [Motor Overheat Alarm]* detection level. 0 : Ramp->Stop 1 : Coast->Stop 2 : Fast Stop (C1-09) 3 : Alarm Only	3 (0 - 3)	636
L1-04 (0483)	Motor oH FLT Reaction Select	V/f OLV OLV/PM AOLV/PM EZOLV Sets the drive operation when the PTC input signal to the drive is at the *oH4 [Motor Overheat Fault (PTC Input)]* detection level. 0 : Ramp->Stop 1 : Coast->Stop 2 : Fast Stop (C1-09)	1 (0 - 2)	636
L1-05 (0484)	Motor Therm.Filter Time	V/f OLV OLV/PM AOLV/PM EZOLV Sets the primary delay time constant for the PTC input signal entered to the drive. This parameter prevents accidental motor overheat faults.	0.20 s (0.00 - 10.00 s)	636
L1-08 (1103)	oL1 Current Level	V/f OLV OLV/PM AOLV/PM EZOLV Sets the reference current for the motor 1 thermal overload detection. When the current level > 0.0 A, you cannot set this value < 10% of drive rated current.	0.0 A (0.0 A or 10% to 150% of the drive rated current)	637
L1-09 (1104)	M2 oL1 Curr.Level	V/f OLV OLV/PM AOLV/PM EZOLV Sets the reference current for the motor 2 thermal overload detection. When the current level > 0.0 A, you cannot set this value < 10% of drive rated current.	0.0 A (0.0 A or 10 to150% of the drive rated current)	637
L1-13 (046D)	Motor oL1 Memory Selection	V/f OLV OLV/PM AOLV/PM EZOLV Sets the function that keeps the current electronic thermal protector value when the drive stops receiving power. 0 : Disabled 1 : Enabled	1 (0, 1)	637
L1-22 (0768) RUN	LeakCurrFil Tim1	V/f OLV OLV/PM AOLV/PM EZOLV Sets the leakage current detection reduction filter time constant during constant speed run. **Note:** You can set this parameter when *C6-02 = B [Carrier Frequency Selection = Leakage Current Rejection PWM]*.	Determined by C6-02 (0.0 - 60.0 s)	637
L1-23 (0769) RUN	LeakCurrFil Tim2	V/f OLV OLV/PM AOLV/PM EZOLV Sets the leakage current detection reduction filter time constant during acceleration/deceleration. **Note:** • You can set this parameter when *C6-02 = B [Carrier Frequency Selection = Leakage Current Rejection PWM]*. • When the setting value increases, the current monitor also starts up slowly. Examine the relevant sequence for problems.	Determined by C6-02 (0.0 - 60.0 s)	637

◆ L2: POWER LOSS RIDE THROUGH

No. (Hex.)	Name	Description	Default (Range)	Ref.
L2-01 (0485)	RideThru@PwrLoss	V/f OLV OLV/PM AOLV/PM EZOLV Sets the drive operation after a momentary power loss. 0 : Disabled 1 : Enabled	0 (0, 1)	643
L2-50 (0453) Expert	RidThruMode@PwrLoss	V/f OLV OLV/PM AOLV/PM EZOLV Sets the drive operation after a momentary power loss.. 0 : Timer Controlled 1 : While CPU Active 2 : KEB Mode 3 : KEB Stop Mode 4 : KEB Decel to Stop	0 (0 - 4)	647
L2-02 (0486)	RideThrough Time@Power Loss	V/f OLV OLV/PM AOLV/PM EZOLV Sets the maximum time that the drive will wait until trying to restart after power loss.	Determined by o2-04, C6-01 (0.0 - 25.5 s)	643
L2-03 (0487)	Min Baseblck Time	V/f OLV OLV/PM AOLV/PM EZOLV Sets the minimum time to continue the drive output block (baseblock) after a baseblock.	Determined by o2-04, C6-01 (0.1 - 5.0 s)	643
L2-04 (0488)	Powloss Ramp Time@recovery	V/f OLV OLV/PM AOLV/PM EZOLV Sets the time for the drive output voltage to go back to correct voltage after completing speed searches.	Determined by o2-04, C6-01 (0.0 - 5.0 s)	644
L2-05 (0489)	UV Detection Lvl (Uv1)	V/f OLV OLV/PM AOLV/PM EZOLV Sets the voltage at which a *Uv1 [DC Bus Undervoltage]* fault is triggered or at which the KEB function is activated. Usually it is not necessary to change this setting. **NOTICE:** *Damage to Equipment. When you set this parameter to a value lower than the default, you must install an AC reactor on the input side of the power supply. If you do not install an AC reactor, it will cause damage to the drive circuitry.*	Determined by o2-04 and E1-01 (200 V Class: 150 - 210 V, 400 V Class: 300 - 420 V)	644
L2-06 (048A) Expert	KEB Decel Time	V/f OLV OLV/PM AOLV/PM EZOLV Sets the deceleration time during KEB operation used to decrease the maximum output frequency to 0. **Note:** When *L2-29 = 2, 3, or 4 [KEB Method = Single KEB2 Ride-Thru, System KEB1 Ride-Thru, or System KEB2 Ride-Thru]* and you do KEB Auto-Tuning, the drive will automatically set this value.	0.0 s (0.0 - 6000.0 s)	644
L2-07 (048B) Expert	KEB Accel Time	V/f OLV OLV/PM AOLV/PM EZOLV Sets the acceleration time to return the frequency to the frequency reference before a power loss after canceling KEB operation.	0.0 s (0.0 - 6000.0 s)	645
L2-08 (048C) Expert	Frq.Gain@KEB Start	V/f OLV OLV/PM AOLV/PM EZOLV Sets the quantity of output frequency reduction used when KEB operation starts as a percentage of the motor rated slip before starting KEB operation.	100% (0 - 300%)	645
L2-09 (048D) Expert	KEB Min.Frq Level	V/f OLV OLV/PM AOLV/PM EZOLV Sets the quantity of output frequency reduction used as a percentage of *E2-02 [Mot Rated Slip]* when KEB operation starts.	20% (0 - 100%)	645
L2-10 (048E) Expert	Minimum KEB Time	V/f OLV OLV/PM AOLV/PM EZOLV Sets the minimum length of time to operate the KEB after the drive detects a momentary power loss.	50 ms (0 - 25500 ms)	645
L2-11 (0461) Expert	KEB DC Volt Setpoint	V/f OLV OLV/PM AOLV/PM EZOLV Sets the target value that controls the DC bus voltage to a constant level in Single Drive KEB Ride-Thru 2. Sets the DC bus voltage level that completes the KEB operation for all other KEB methods.	Determined by E1-01 (Determined by E1-01)	646
L2-29 (0475) Expert	KEB Method	V/f OLV OLV/PM AOLV/PM EZOLV Sets the KEB function operation mode. 1 : Single KEB1 Ride-Thru 2 : Single KEB2 Ride-Thru 3 : System KEB1 Ride-Thru 4 : System KEB2 Ride-Thru	1 (1 - 4)	646

No. (Hex.)	Name	Description	Default (Range)	Ref.
L2-30 (045E) Expert	KEB ZeroSpeed Operation	V/f OLV OLV/PM AOLV/PM EZOLV Sets the operation when the output frequency decreases below the zero level (DC braking injection starting frequency) during KEB deceleration when *L2-01 = 1 [RideThru@PwrLoss = Enabled]* and *L2-50 = 2 to 4 [RidThruMode@PwrLoss = KEB ModeKEB Stop Mode, or KEB Decel to Stop]*. 1 : Baseblock 2 : DC/SC Braking	1 (1, 2)	646
L2-31 (045D) Expert	KEB StartV Offset Level	V/f OLV OLV/PM AOLV/PM EZOLV Sets the KEB start voltage offset.	Determined by A1-02 (200 V Class: 0 - 100 V, 400 V Class: 0 - 200 V)	647

◆ L3: STALL PREVENTION

No. (Hex.)	Name	Description	Default (Range)	Ref.
L3-01 (048F)	StallP Mode@Accel	V/f OLV OLV/PM AOLV/PM EZOLV Sets the method of the Stall Prevention During Acceleration. 1 : Disabled 2 : General Purpose 3 : Intelligent Accel 4 : ILim Mode	2 (1 - 4)	648
L3-02 (0490)	StallP Level@Accel	V/f OLV OLV/PM AOLV/PM EZOLV Sets the output current level at which the Stall Prevention function operates during acceleration where the drive rated output current is 100%. **Note:** The upper limit to the setting range changes when the setting for *C6-01 [ND/HD Duty Selection]* changes. • 150% when *C6-01 = 0 [HD Rating]* • 120% when *C6-01 = 1 [ND Rating]*	Determined by C6-01 and L8-38 (0 - 150%)	650
L3-03 (0491)	StallP Limit@Accel	V/f OLV OLV/PM AOLV/PM EZOLV Sets the lower limit for the stall prevention level used in the constant output range as a percentage of the drive rated output current.	50% (0 - 100%)	650
L3-04 (0492)	StallP@Decel Enable	V/f OLV OLV/PM AOLV/PM EZOLV Enables Stall Prevention during deceleration. 0 : Disabled 1 : Enabled	1 (0, 1)	650
L3-50 (0458)	StallP@Decel Mode	V/f OLV OLV/PM AOLV/PM EZOLV Sets the method that the drive will use to prevent overvoltage faults when decelerating. **Note:** 1. To connect a dynamic braking option (braking resistor or braking resistor unit) to the drive, set this parameter to *0 or 3*. Parameter values *1, 2, 4, and 5* will enable Stall Prevention function during deceleration, and the dynamic braking option will not function. 2. The setting range changes when the *A1-02 [Control Method]* value changes: • When *A1-02 = 5 [PM OLVector]*, setting range is *0 to 2* • When *A1-02 = 6, or 8 [PM AOLVector, or EZ Vector]*, setting range is *0, 1*. 0 : General Purpose 1 : Automatic Decel Reduction 2 : Gen Purpose w/ DB Resistor 3 : HiFlux Overexcitation 4 : HiFlux2 Overexcitation	0 (Determined by A1-02)	655
L3-05 (0493)	StallP@RUN Enable	V/f OLV OLV/PM AOLV/PM EZOLV Enables Stall Prevention during Run. **Note:** • An output frequency less than 6 Hz disables Stall Prevention during Run. The setting values of *L3-05* and *L3-06 [StallP Level@Run]* do not have an effect. • The setting range changes when the *A1-02 [Control Method]* value changes: –*A1-02 = 0, 5 [V/f Control, PM OLVector]* : 0 to 2 –*A1-02 = 8 [EZ Vector]* : 0, 3 0 : Disabled 1 : Enabled	Determined by A1-02 (0 - Determined by A1-02)	651
L3-51 (0459)	StallP@RUNDecTime	V/f OLV OLV/PM AOLV/PM EZOLV Sets the function to enable and disable Stall Prevention During Run. **Note:** An output frequency less than 6 Hz will disable Stall Prevention during Run regardless of *L3-05* and *L3-06 [StallP Level@Run]* settings. 0 : Dec Time 1 (C1-02) 1 : Dec Time 2 (C1-04)	0 (Determined by A1-02)	656

No. (Hex.)	Name	Description	Default (Range)	Ref.
L3-06 (0494)	StallP Level@Run	V/f OLV OLV/PM AOLV/PM EZOLV Sets the output current level at which the Stall Prevention function is enabled during run when the drive rated output current is 100%. **Note:** This parameter is applicable when *L3-05 = 1 [StallP@RUN Enable = Enabled]* and *L3-51 = 0, 1 [StallP@RUNDecTime = Dec Time 1 (C1-02), Dec Time 2 (C1-04)]*.	Determined by C6-01 and L8-38 (5 - 150%)	651
L3-11 (04C7)	Overvolt Supression Select	V/f OLV OLV/PM AOLV/PM EZOLV Sets the overvoltage suppression function. 0 : Disabled 1 : Enabled	0 (0, 1)	651
L3-17 (0462)	DCBus Regul.Level	V/f OLV OLV/PM AOLV/PM EZOLV Sets the target value for the DC bus voltage when the overvoltage suppression function and the Decel Stall Prevention function (Intelligent Stall Prevention) are active.	200 V Class: 375 V, 400 V: 750 V (200 V Class: 150 to 400 V, 400 V Class: 300 to 800 V)	652
L3-20 (0465) Expert	DCBus VoltAdj Gain	V/f OLV OLV/PM AOLV/PM EZOLV Sets the proportional gain used to control the DC bus voltage.	Determined by A1-02 (0.00 - 5.00)	652
L3-21 (0466) Expert	OVSup Acc/Dec Gain	V/f OLV OLV/PM AOLV/PM EZOLV Sets the proportional gain to calculate acceleration and deceleration rates.	Determined by A1-02 (0.10 - 10.00)	652
L3-22 (04F9)	StallP@Acc Deceleration Time	V/f OLV OLV/PM AOLV/PM EZOLV Sets the momentary deceleration time that the drive will use when it tries to accelerate a PM motor and detected motor stalls. This function is applicable when *L3-01 = 2 [StallP Mode@Accel = General Purpose]*.	0.0 s (0.0 - 6000.0 s)	653
L3-23 (04FD)	CHP Stall P Selection	V/f OLV OLV/PM AOLV/PM EZOLV Sets the function to automatically decrease the Stall Prevention Level during Run for constant output ranges. 1 : Level@L3-06 2 : Automatic Reduction	1 (1, 2)	653
L3-24 (046E) Expert	Acc@Rated Torque	V/f OLV OLV/PM AOLV/PM EZOLV Sets the motor acceleration time to reach the maximum frequency at the motor rated torque for stopped single-drive motors.	Determined by o2-04, C6-01, E2-11, and E5-01 (0.001 - 10.000 s)	653
L3-25 (046F) Expert	Load Inertia Ratio	V/f OLV OLV/PM AOLV/PM EZOLV Sets the ratio between motor inertia and machine inertia.	1.0 (0.1 - 1000.0)	653
L3-26 (0455) Expert	DC Bus Capacitors Extension	V/f OLV OLV/PM AOLV/PM EZOLV Sets the capacity for external main circuit capacitors. Usually it is not necessary to change this setting. Sets this parameter when you use the KEB Ride-Thru function.	0 µF (0 to 65000 µF)	654
L3-27 (0456)	StallP Detect Time	V/f OLV OLV/PM AOLV/PM EZOLV Sets a delay time between reaching the Stall Prevention level and starting the Stall Prevention function.	60 ms (0 - 5000 ms)	654
L3-34 (016F) Expert	Torque Lim.Delay Time	V/f OLV OLV/PM AOLV/PM EZOLV Sets the filter time constant that returns the torque limit to its initial value when KEB operation operates in Single Drive KEB Ride-Thru mode.	Determined by A1-02 (0.000 - 1.000 s)	654
L3-35 (0747) Expert	SpAgree Width@StallP	V/f OLV OLV/PM AOLV/PM EZOLV Sets the width for speed agreement when *L3-04 = 1 [StallP@Decel Enable = Enabled]* and *L3-50 = 1 [StallP@Decel Mode = Automatic Decel Reduction]*. Usually it is not necessary to change this setting.	0.00 Hz (0.00 - 1.00 Hz)	654
L3-36 (11D0)	VibSup Gain@Accel	V/f OLV OLV/PM AOLV/PM EZOLV Sets the gain to suppress current and motor speed hunting during operation when *L3-01 = 4 [StallP Mode@Accel = ILim Mode]*. Usually it is not necessary to change this setting.	Determined by A1-02 (0.0 - 100.0)	654
L3-37 (11D1) Expert	CurLim ITime@Accel	V/f OLV OLV/PM AOLV/PM EZOLV Suppresses current hunting during acceleration. Usually it is not necessary to change this setting.	5 ms (0 - 100 ms)	654
L3-38 (11D2) Expert	CurLim PGain@Accel	V/f OLV OLV/PM AOLV/PM EZOLV Suppresses current hunting and overshooting that occurs when the drive stalls during acceleration. Usually it is not necessary to change this setting.	10.0 (0.0 - 100.0)	655
L3-39 (11D3)	CurLim Filt@Accel	V/f OLV OLV/PM AOLV/PM EZOLV Sets the time constant to adjust the acceleration rate when *L3-01 = 4 [StallP Mode@Accel = ILim Mode]*. Usually it is not necessary to change this setting.	100.0 ms (1.0 - 1000.0 ms)	655
L3-40 (11D4)	CurLim SCurve@Acc/Dec	V/f OLV OLV/PM AOLV/PM EZOLV Sets the function to enable and disable the best S-curve characteristic used for current-limited acceleration. 0 : Disabled 1 : Enabled	0 (0, 1)	655

◆ L4: SPEED DETECTION

No. (Hex.)	Name	Description	Default (Range)	Ref.
L4-01 (0499)	SpAgree Det.Level	V/f OLV OLV/PM AOLV/PM EZOLV Sets the level to detect speed agree or motor speed. Sets the level to detect speed agree or motor speed when *H2-01 to H2-03 = F, 10, 13, 14 [NO,NC,CM FuncSelection to DO2-O2C Func Selection = SpeedAgree1, USpeedAgree1, FreqDetect 1, FreqDetect 2]*.	Determined by A1-02 (Determined by A1-02)	657
L4-02 (049A)	SpAgree Det.Width	V/f OLV OLV/PM AOLV/PM EZOLV Sets the width to detect speed agree or motor speed. Sets the width to detect speed agree or motor speed when *H2-01 to H2-03 = F, 10, 13, 14 [NO,NC,CM FuncSelection to DO2-O2C Func Selection = SpeedAgree1, USpeedAgree1, FreqDetect 1, FreqDetect 2]*.	Determined by A1-02 (Determined by A1-02)	657
L4-03 (049B)	SpAgree Det.Level(+/-)	V/f OLV OLV/PM AOLV/PM EZOLV Sets the level to detect speed agree or motor speed. Sets the level to detect speed agree or motor speed when *H2-01 to H2-03 = 11, 12, 15, 16 [NO,NC,CM FuncSelection to DO2-O2C Func Selection = SpeedAgree2, USpeedAgree2, FreqDetect 3, FreqDetect 4]*.	Determined by A1-02 (Determined by A1-02)	657
L4-04 (049C)	SpAgree Det.Width(+/-)	V/f OLV OLV/PM AOLV/PM EZOLV Sets the width to detect speed agree or motor speed. Sets the width to detect speed agree or motor speed when *H2-01 to H2-03 = 11, 12, 15, 16 [NO,NC,CM FuncSelection to DO2-O2C Func Selection = SpeedAgree2, USpeedAgree2, FreqDetect 3, FreqDetect 4]*.	Determined by A1-02 (Determined by A1-02)	657
L4-05 (049D)	FrefLoss Det.Selection	V/f OLV OLV/PM AOLV/PM EZOLV Sets the operation when the drive detects a loss of frequency reference. 1 : Stop 2 : Run@L4-06PrevRef	1 (1, 2)	657
L4-06 (04C2)	Freq.Ref@RefLoss	V/f OLV OLV/PM AOLV/PM EZOLV Sets the frequency reference as a percentage to continue drive operation after it detects a frequency reference loss. The value is a percentage of the frequency reference before the drive detected the loss.	80.0% (0.0 - 100.0%)	658
L4-07 (0470)	SpAgree Det.Selection	V/f OLV OLV/PM AOLV/PM EZOLV Sets the condition that activates speed detection. 1 : No Detect@BB 2 : Always Detect	1 (1, 2)	658
L4-08 (047F)	Sp Agree Source Selection	V/f OLV OLV/PM AOLV/PM EZOLV Sets the drive to use the soft starter output frequency or the motor speed (estimation value) for speed detection. 0 : SFS O/P (Reference) 1 : MotSpd (ActSpeed)	1 (0, 1)	658

◆ L5: FAULT RESTART

No. (Hex.)	Name	Description	Default (Range)	Ref.
L5-01 (049E)	Auto-Reset Attempts	V/f OLV OLV/PM AOLV/PM EZOLV Sets the number of times that the drive will try to restart.	0 (0 - 10 times)	659
L5-02 (049F)	Fault@Reset Select	V/f OLV OLV/PM AOLV/PM EZOLV Sets the function that sends signals to the MFDO terminal set for *Fault [H2-xx = 3]* while the drive is automatically restarting. 1 : Disable Fault Output 2 : Enable Fault Output	1 (1, 2)	660
L5-04 (046C)	Interval Reset Time	V/f OLV OLV/PM AOLV/PM EZOLV Sets the time interval between each Auto Restart attempt. This function is enabled when *L5-05 = 2 [Reset Method = Use L5-04 Time]*.	10.0 s (0.5 - 600.0 s)	660
L5-05 (0467)	Reset Method	V/f OLV OLV/PM AOLV/PM EZOLV Sets the count method for the Auto Restart operation. 1 : Continuous 2 : Use L5-04 Time	1 (1, 2)	660

No. (Hex.)	Name	Description	Default (Range)	Ref.
L5-07 (0B2A)	OL1-4 Auto-Reset Select	V/f OLV OLV/PM AOLV/PM EZOLV Use these 4 digits to set the Auto Restart function for *oL1* to *oL4*. From left to right, the digits set *oL1*, *oL2*, *oL3*, and *oL4*, in order. 0000 : Disabled 0001 : Enabled (—/—/—/oL4) 0010 : Enabled (—/—/oL3/—) 0011 : Enabled (—/—/oL3/oL4) 0100 : Enabled (—/oL2/—/—) 0101 : Enabled (—/oL2/—/oL4) 0110 : Enabled (—/oL2/oL3/—) 0111 : Enabled (—/oL2/oL3/oL4) 1000 : Enabled (oL1/—/—/—) 1001 : Enabled (oL1/—/—/oL4) 1010 : Enabled (oL1/—/oL3/—) 1011 : Enabled (oL1/—/oL3/oL4) 1100 : Enabled (oL1/oL2/—/—) 1101 : Enabled (oL1/oL2/—/oL4) 1110 : Enabled (oL1/oL2/oL3/—) 1111 : Enabled (oL1/oL2/oL3/oL4)	1111 (0000 - 1111)	660
L5-08 (0B2B)	U/OV,OH,GF A-Reset Select	V/f OLV OLV/PM AOLV/PM EZOLV Use these 4 digits to set the Auto Restart function for *Uv1*, *ov*, *oH1*, and *GF*. From left to right, the digits set *Uv1*, *ov*, *oH1*, and *GF*, in order. 0000 : Disabled 0001 : Enabled (—/–/—/GF) 0010 : Enabled (—/–/oH1/–) 0011 : Enabled (—/–/oH1/GF) 0100 : Enabled (—/ov/—/–) 0101 : Enabled (—/ov/—/GF) 0110 : Enabled (—/ov/oH1/–) 0111 : Enabled (—/ov/oH1/GF) 1000 : Enabled (Uv1/–/—/–) 1001 : Enabled (Uv1/–/—/GF) 1010 : Enabled (Uv1/–/oH1/–) 1011 : Enabled (Uv1/–/oH1/GF) 1100 : Enabled (Uv1/ov/—/–) 1101 : Enabled (Uv1/ov/—/GF) 1110 : Enabled (Uv1/ov/oH1/–) 1111 : Enabled (Uv1/ov/oH1/GF)	1111 (0000 - 1111)	661

◆ L6: TORQUE DETECTION

No. (Hex.)	Name	Description	Default (Range)	Ref.
L6-01 (04A1)	Trq Det1 Select	V/f OLV OLV/PM AOLV/PM EZOLV Enables overtorque and undertorque detection and the operation of drives (operation status) after detection. 0 : Disabled 1 : Enabled	0 (0, 1)	663
L6-50 (04CC)	Trq Det1 Type	V/f OLV OLV/PM AOLV/PM EZOLV Sets the speed range that detects overtorque and undertorque. 0 : At Overload 1 : At Underload	0 (0, 1)	665
L6-51 (04CD)	Trq Det1 Action	V/f OLV OLV/PM AOLV/PM EZOLV Sets operation of drives (operation status) after detection. 0 : Alarm 1 : Fault	0 (0, 1)	665
L6-52 (04CE)	Trq Det1 Condition	V/f OLV OLV/PM AOLV/PM EZOLV Sets operation of drives (operation status) after detection. 0 : At Speed Agree 1 : During Run	0 (0, 1)	665
L6-02 (04A2)	Trq Det1 Level	V/f OLV OLV/PM AOLV/PM EZOLV Sets the detection level for Overtorque/Undertorque Detection 1. In V/f control, drive rated output current = 100% value. In vector control, motor rated torque = 100% value.	150% (0 - 300%)	664
L6-03 (04A3)	Trq Det1 Time	V/f OLV OLV/PM AOLV/PM EZOLV Sets the detection time for Overtorque/Undertorque Detection 1.	0.1 s (0.0 - 10.0 s)	664

No. (Hex.)	Name	Description	Default (Range)	Ref.
L6-04 (04A4)	Trq Det2 Select	V/f OLV OLV/PM AOLV/PM EZOLV Enables overtorque and undertorque detection and the operation of drives (operation status) after detection. 0 : Disabled 1 : Enabled	0 (0, 1)	664
L6-53 (04CF)	Trq Det2 Type	V/f OLV OLV/PM AOLV/PM EZOLV Sets the speed range that detects overtorque and undertorque. 0 : At Overload 1 : At Underload	0 (0, 1)	666
L6-54 (04D0)	Trq Det2 Action	V/f OLV OLV/PM AOLV/PM EZOLV Sets operation of drives (operation status) after detection. 0 : Alarm 1 : Fault	0 (0, 1)	666
L6-55 (04D1)	Trq Det2 Condition	V/f OLV OLV/PM AOLV/PM EZOLV Sets operation of drives (operation status) after detection. 0 : At Speed Agree 1 : During Run	0 (0, 1)	666
L6-05 (04A5)	Trq Det2 Level	V/f OLV OLV/PM AOLV/PM EZOLV Sets the detection level for Overtorque/Undertorque Detection 2. In V/f control, drive rated output current = 100% value. In vector control, motor rated torque = 100% value.	150% (0 - 300%)	664
L6-06 (04A6)	Trq Det2 Time	V/f OLV OLV/PM AOLV/PM EZOLV Sets the detection time for Overtorque/Undertorque Detection 2.	0.1 s (0.0 - 10.0 s)	664
L6-07 (04E5)	Trq Detect Filter Time	V/f OLV OLV/PM AOLV/PM EZOLV Sets the time constant for a primary filter to the torque reference or to the output current used to detect overtorque/undertorque.	0 ms (0 - 1000 ms)	664
L6-08 (0468)	MechF Enable	V/f OLV OLV/PM AOLV/PM EZOLV Enables mechanical deterioration detection and how the drive operates (operation status) after detection. 0 : Disabled 1 : Enabled	0 (0, 1)	664
L6-56 (04D2)	MechF Action	V/f OLV OLV/PM AOLV/PM EZOLV Sets the speed where the drive detects mechanical deterioration and how the drive operates (operation status) after detection. Only available when *L6-08 = 1 [MechF Enable = Enabled]*. 0 : Alarm 1 : Fault	0 (0, 1)	666
L6-57 (04D3)	MechF AbsSpeed	V/f OLV OLV/PM AOLV/PM EZOLV Sets the speed where the drive detects mechanical deterioration and how the drive operates (operation status) after detection. Only available when *L6-08 = 1 [MechF Enable = Enabled]*. 0 : Spd Absolute 1 : Spd Signed	0 (0, 1)	666
L6-58 (04D4)	MechF Method	V/f OLV OLV/PM AOLV/PM EZOLV Sets the speed where the drive detects mechanical deterioration and how the drive operates (operation status) after detection. Only available when *L6-08 = 1 [MechF Enable = Enabled]*. Use parameter L6-57 [MechF AbsSpeed] to either use absolute speed or signed speed value. 0 : Spd>L6-09 1 : Spd<L6-09	0 (0, 1)	666
L6-09 (0469)	MechFatigue Speed Detect Level	V/f OLV OLV/PM AOLV/PM EZOLV Sets the speed level where the drive will operate the mechanical deterioration detection function, as a percentage of the Maximum Output Frequency. **Note:** Parameter *A1-02 [Control Method]* selects which parameter is the maximum output frequency. • *A1-02 ≠ 8 [EZ Vector]: E1-04 [Max Output Frequency]* • *A1-02 = 8: E9-02 [Maximum Speed]*	110.0% (-110.0 - 110.0%)	665
L6-10 (046A)	MechFatigue Delay Time	V/f OLV OLV/PM AOLV/PM EZOLV Sets the time for mechanical deterioration detection.	0.1 s (0.0 - 10.0 s)	665
L6-11 (046B)	MechFatigue Hold Off Time	V/f OLV OLV/PM AOLV/PM EZOLV Sets the time that the drive will start mechanical deterioration detection triggered by the cumulative operation time of the drive.	0 h (0 - 65535 h)	665

◆ L7: TORQUE LIMIT

No. (Hex.)	Name	Description	Default (Range)	Ref.
L7-01 (04A7) RUN	FW Torque Limit	V/f OLV OLV/PM AOLV/PM EZOLV Sets the torque limit value for forward motoring as a percentage, where motor rated torque is the 100% value.	200% (0 - 300%)	667
L7-02 (04A8) RUN	RV Torque Limit	V/f OLV OLV/PM AOLV/PM EZOLV Sets the torque limit value for reversed motoring as a percentage, where motor rated torque is the 100% value.	200% (0 - 300%)	667
L7-03 (04A9) RUN	FW Reg. TrqLimit	V/f OLV OLV/PM AOLV/PM EZOLV Sets the torque limit value for forward regenerative conditions as a percentage of the motor rated torque.	200% (0 - 300%)	668
L7-04 (04AA) RUN	RV Reg. TrqLimit	V/f OLV OLV/PM AOLV/PM EZOLV Sets the torque limit value for reversed regenerative conditions as a percentage of the motor rated torque.	200% (0 - 300%)	668
L7-06 (04AC)	TrqLimit Integral Time	V/f OLV OLV/PM AOLV/PM EZOLV Sets the integral time constant for the torque limit function.	200 ms (5 - 10000 ms)	668
L7-07 (04C9)	TrqLimit@Acc/Decel	V/f OLV OLV/PM AOLV/PM EZOLV Sets the torque limit function during acceleration and deceleration. 1 : P-ctrl@Ac/Dec 2 : I-ctrl@Ac/Dec	1 (1, 2)	668
L7-16 (044D)	TrqLimit@Start	V/f OLV OLV/PM AOLV/PM EZOLV Assigns a time filter to allow the torque limit to build at start. 0 : Disabled 1 : Enabled	1 (0, 1)	669

◆ L8: DRIVE PROTECTION

No. (Hex.)	Name	Description	Default (Range)	Ref.
L8-01 (04AD)	3%ERF DBR Protection	V/f OLV OLV/PM AOLV/PM EZOLV Sets the function to enable braking resistor protection with a Yaskawa ERF series braking resistor (3% ED) installed on the heatsink. 0 : Disabled 1 : Enabled	0 (0, 1)	669
L8-02 (04AE)	Overheat Alm Level	V/f OLV OLV/PM AOLV/PM EZOLV Sets the *oH* detection level in temperature.	Determined by o2-04, C6-01 (50 - 150 °C)	669
L8-03 (04AF)	Overheat Pre-Alarm Selection	V/f OLV OLV/PM AOLV/PM EZOLV Sets the operation of drives when an *oH* alarm is detected. 0 : Ramp->Stop 1 : Coast->Stop 2 : Fast Stop (C1-09) 3 : Alarm Only 4 : Run@L8-19 Rate	3 (0 - 4)	669
L8-05 (04B1)	In PhaseLoss Selection	V/f OLV OLV/PM AOLV/PM EZOLV Sets the function to enable and disable input phase loss detection. 0 : Disabled 1 : Enabled	1 (0, 1)	670
L8-07 (04B3)	Out PhaseLoss Selection	V/f OLV OLV/PM AOLV/PM EZOLV Sets the function to enable and disable output phase loss detection. The drive starts output phase loss detection when the output current decreases to less than 5% of the drive rated current. **Note:** The drive can incorrectly start output phase loss detection in these conditions: • The motor rated current is very small compared to the drive rating. • The drive is operating a PM motor with a small load. 0 : Disabled 1 : 1PH Loss Det 2 : 2/3PH Loss Det	0 (0 - 2)	670
L8-09 (04B5)	Ground Fault Selection	V/f OLV OLV/PM AOLV/PM EZOLV Sets the function to enable and disable ground fault protection. 0 : Disabled 1 : Enabled	Determined by o2-04 (0, 1)	671

No. (Hex.)	Name	Description	Default (Range)	Ref.
L8-10 (04B6)	Fan Operate Selection	V/f OLV OLV/PM AOLV/PM EZOLV Sets operation of the heatsink cooling fan. 1 : Dur Run (OffDly) 2 : Always On 3 : Fan ON @Heating of Drive	1 (1 - 3)	671
L8-11 (04B7)	Fan Off-Delay Time	V/f OLV OLV/PM AOLV/PM EZOLV Sets the length of time that the drive will wait before it stops the cooling fan after it cancels the Run command when *L8-10 = 1 [Fan Operate Selection = Dur Run (OffDly)]*.	60 s (0 - 300 s)	671
L8-12 (04B8)	Ambient Temperature Setting	V/f OLV OLV/PM AOLV/PM EZOLV Sets the ambient temperature of the drive installation area. **Note:** The setting range changes when the *L8-35 [Installation Selection]* value changes: • *0 [IP00/IP20/Open-Chassis]*: -10 °C to +60 °C • *1 [Side-by-Side Mounting]*: -10 °C to +50 °C • *2 [UL Type 1]*: -10 °C to +50 °C • *3 [Ext. Heatsink]*: -10 °C to +50 °C	40 °C (-10 °C - +60 °C)	671
L8-15 (04BB)	oL2@LoSpeed Selection	V/f OLV OLV/PM AOLV/PM EZOLV Sets the function to decrease drive overload at low speeds to prevent damage to the main circuit transistor during low speed operation (at 6 Hz or slower) to prevent *oL2 [Drive Overloaded]*. **Note:** Contact the manufacturer or your nearest sales representative before disabling this function at low speeds. If you frequently operate drives with high output current in low speed ranges, it can cause heat stress and decrease the life span of drive IGBTs. 0 : Disabled 1 : Enabled	1 (0, 1)	672
L8-18 (04BE)	Soft CurrLim Selection	V/f OLV OLV/PM AOLV/PM EZOLV Set the software current limit selection function to prevent damage to the main circuit transistor caused by too much current. 0 : Disabled 1 : Enabled	1 (0, 1)	672
L8-19 (04BF)	Frq Reduct@oHPre-Alarm	V/f OLV OLV/PM AOLV/PM EZOLV Sets the ratio at which the drive derates the frequency reference during an *oH* alarm.	0.8 (0.1 - 0.9)	672
L8-27 (04DD)	OverCurr Det Gain	V/f OLV OLV/PM AOLV/PM EZOLV Sets the PM motor overcurrent detection level as a percentage of the motor rated current value. **Note:** Parameter *A1-02 [Control Method]* selects which parameter is the motor rated current. • *A1-02 ≠ 8 [EZ Vector]*: *E5-03 [PM Mot Rated Current (FLA)]* • *A1-02 = 8*: *E9-06 [Motor Rated Current]*	300.0% (0.0 - 1000.0%)	672
L8-29 (04DF)	LF2 Unbalance Selection	V/f OLV OLV/PM AOLV/PM EZOLV Sets the function to detect *LF2*. 0 : Disabled 1 : Enabled	1 (0, 1)	673
L8-31 (04E1)	LF2 Detect Time	V/f OLV OLV/PM AOLV/PM EZOLV Sets the LF2 [Output Current Imbalance] detection time.	3 (1 – 100)	673
L8-35 (04EC)	Installation Selection	V/f OLV OLV/PM AOLV/PM EZOLV Sets the type of drive installation. 0 : IP00/IP20/Open-Chassis 1 : Side-by-Side Mounting 2 : UL Type 1 3 : Ext. Heatsink	0 (0 - 3)	673
L8-40 (04F1)	Carrier Red Off-Delay Time	V/f OLV OLV/PM AOLV/PM EZOLV Sets the length of time until the automatically reduced carrier frequency returns to the condition before the reduction.	Determined by A1-02 (0.00 - 2.00 s)	673
L8-41 (04F2)	HCA alarm Selection	V/f OLV OLV/PM AOLV/PM EZOLV Sets the function to cause an *HCA [Current Alarm]* when the output current is more than 150% of the drive rated current. 0 : Disabled 1 : Enabled	0 (0, 1)	674
L8-51 (0471) Expert	STPo Current Level	V/f OLV OLV/PM AOLV/PM EZOLV Sets the *STPo [Motor Step-Out Detected]* detection level as a percentage of the motor rated current. **Note:** Parameter *A1-02 [Control Method]* selects which parameter is the motor rated current. • *A1-02 = 5 [PM OLVector]*: *E5-03 [PM Mot Rated Current (FLA)]* • *A1-02 = 8 [EZ Vector]*: *E9-06 [Motor Rated Current]*	0.0% (0.0 - 300.0%)	674

No. (Hex.)	Name	Description	Default (Range)	Ref.
L8-52 (0472) Expert	STPo Integral Level	V/f OLV **OLV/PM** AOLV/PM EZOLV Sets the detection level for *STPo [Motor Step-Out Detected]* related to the ACR integral value.	1.0 (0.1 - 2.0)	674
L8-53 (0473) Expert	STPo Integral Time	V/f OLV **OLV/PM** AOLV/PM EZOLV Sets the length of time until the drive detects *STPo* after it is more than the value of *L8-51 [STPo Current Level]*.	1.0 s (1.0 - 10.0 s)	674
L8-54 (0474) Expert	STPo Id Diff Detection	V/f OLV **OLV/PM** AOLV/PM **EZOLV** Sets the Id deviation detection function for *STPo [Motor Step-Out Detected]*. 0 : Disable 1 : Enabled	1 (0, 1)	674
L8-55 (045F)	DB IGBT Protection	**V/f** **OLV** **OLV/PM** **AOLV/PM** **EZOLV** Sets the protection function for the internal braking transistor. 0 : Disable 1 : Enabled	1 (0, 1)	674
L8-56 (047D) Expert	StallP@Acc Activation Time	V/f OLV **OLV/PM** AOLV/PM EZOLV Sets the length time that the acceleration stall prevention function can continue to operate before the drive detects an *STPo [Motor Step-Out Detected]*.	5000 ms (100 - 5000 ms)	675
L8-57 (047E) Expert	StallP Retry Counts	V/f OLV **OLV/PM** AOLV/PM EZOLV Sets the number of times the acceleration stall prevention function can operate until speeds agree before the drive detects an *STPo [Motor Step-Out Detected]*.	10 (1 - 10 times)	675
L8-90 (0175) Expert	STPo Detect Level	V/f OLV **OLV/PM** **AOLV/PM** **EZOLV** Sets the detection level that the control fault must be equal to or more than to cause an *STPo [Motor Step-Out Detected]*.	Determined by A1-02 (0 - 5000 times)	675
L8-93 (073C) Expert	Lso Detect Time	V/f OLV OLV/PM **AOLV/PM** EZOLV Sets the length of time the drive will wait to start baseblock after detecting *LSo [Low Speed Motor Step-Out]*.	1.0 s (0.0 - 10.0 s)	675
L8-94 (073D) Expert	Lso Detect Level	V/f OLV OLV/PM **AOLV/PM** EZOLV Sets the detection level for *LSo [Low Speed Motor Step-Out]* as a percentage of *E1-04 [Max Output Frequency]*.	3% (0 - 10%)	675
L8-95 (077F) Expert	Lso Amount	V/f OLV OLV/PM **AOLV/PM** EZOLV Sets the average count of *LSo [Low Speed Motor Step-Out]* detections.	10 (1 - 50 times)	675

11.11 n: SPECIAL

◆ n1: HUNTING PREVENTION

No. (Hex.)	Name	Description	Default (Range)	Ref.
n1-01 (0580)	HuntPrev Selection	V/f OLV OLV/PM AOLV/PM EZOLV Sets the function to prevent hunting. 0 : Disabled 1 : Enabled	0 (0, 1)	676
n1-02 (0581) Expert	HuntPrev Gain Setting	V/f OLV OLV/PM AOLV/PM EZOLV Sets the performance of the hunting prevention function. Usually it is not necessary to change this parameter.	1.00 (0.00 - 2.50)	676
n1-03 (0582) Expert	HuntPrev Time Constant	V/f OLV OLV/PM AOLV/PM EZOLV Sets the primary delay time constant of the hunting prevention function. Usually it is not necessary to change this parameter.	Determined by o2-04 (0 - 500 ms)	676
n1-05 (0530) Expert	HuntPrev Gain Reverse Mode	V/f OLV OLV/PM AOLV/PM EZOLV Sets the performance of the hunting prevention function. This parameter adjusts Reverse run. Usually it is not necessary to change this parameter.	0.00 (0.00 - 2.50)	676
n1-13 (1B59) Expert	DCBus Stab.Control	V/f OLV OLV/PM AOLV/PM EZOLV Sets the oscillation suppression function for the DC bus voltage. 0 : Disabled 1 : Enabled	0 (0, 1)	677
n1-14 (1B5A) Expert	DCBus Stab Time	V/f OLV OLV/PM AOLV/PM EZOLV Adjusts the responsiveness of the oscillation suppression function for the DC bus voltage. Set *n1-13 = 1 [DCBus Stab.Control = Enabled]* to enable this parameter.	100.0 ms (50.0 - 500.0 ms)	677

◆ n2: AFR - AUTO FREQ REGULATION

No. (Hex.)	Name	Description	Default (Range)	Ref.
n2-01 (0584)	AFR Gain	V/f OLV OLV/PM AOLV/PM EZOLV Sets the gain of the AFR function as a magnification value. Usually it is not necessary to change this setting.	1.00 (0.00 - 10.00)	677
n2-02 (0585)	AFR Time 1	V/f OLV OLV/PM AOLV/PM EZOLV Sets the time constant that sets the rate of change for the AFR function. Usually it is not necessary to change this setting.	50 ms (0 - 2000 ms)	677
n2-03 (0586)	AFR Time 2	V/f OLV OLV/PM AOLV/PM EZOLV Sets the time constant that sets the speed difference of the AFR function. Use this parameter for speed searches or regeneration. Usually it is not necessary to change this setting.	750 ms (0 - 2000 ms)	678

◆ n3: HIGHSLIP/OVEREXCITATION BRAKE

No. (Hex.)	Name	Description	Default (Range)	Ref.
n3-01 (0588) Expert	HSB Dec Freq Width	V/f OLV OLV/PM AOLV/PM EZOLV Sets the amount by which the output frequency is to be lowered during high-slip braking, as a percentage of *E1-04 [Max Output Frequency]*, which represents the 100% value.	5% (1 - 20%)	679
n3-02 (0589) Expert	HSB CurrLim Level	V/f OLV OLV/PM AOLV/PM EZOLV Sets the maximum current output during high-slip braking as a percentage, where *E2-01 [Mot Rated Current (FLA)]* is 100%. Also set the current suppression to prevent exceeding drive overload tolerance. **Note:** The upper limit to the setting range changes when the setting for *C6-01 [ND/HD Duty Selection]* changes. • 150% when *C6-01 = 0 [HD Rating]* • 120% when *C6-01 = 1 [ND Rating]*	Determined by C6-01 and L8-38 (0 - 150%)	680
n3-03 (058A) Expert	HSB DwellTime@Stop	V/f OLV OLV/PM AOLV/PM EZOLV Sets the dwell time, a length of time when high-slip braking is ending and during which the motor speed decreases and runs at a stable speed. For a set length of time, the drive will hold the actual output frequency at the minimum output frequency set in *E1-09*.	1.0 s (0.0 - 10.0 s)	680
n3-04 (058B) Expert	HSB Overload Time	V/f OLV OLV/PM AOLV/PM EZOLV Sets the time used to detect *oL7 [High Slip Braking Overload]*, which occurs when the output frequency does not change during high-slip braking. Usually it is not necessary to change this parameter.	40 s (30 - 1200 s)	680

No. (Hex.)	Name	Description	Default (Range)	Ref.
n3-13 (0531)	OverExcBr Gain	V/f OLV OLV/PM AOLV/PM EZOLV Sets the gain value that the drive multiplies by the V/f pattern output value during overexcitation deceleration to calculate the overexcitation level.	1.10 (1.00 - 1.40)	680
n3-14 (0532) Expert	OverExcBr Harmonics Selection	V/f OLV OLV/PM AOLV/PM EZOLV Sets the function that injects harmonic signals during overexcitation deceleration. 0 : Disabled 1 : Enabled	0 (0, 1)	681
n3-21 (0579)	OverExcBr Current Level	V/f OLV OLV/PM AOLV/PM EZOLV Sets the upper limit of the current that is suppressed at the time of overexcitation deceleration as a percentage of the drive rated current.	100% (0 - 150%)	681
n3-23 (057B)	OverExcBr Operation	V/f OLV OLV/PM AOLV/PM EZOLV Sets the direction of motor rotation where the drive will enable overexcitation. 1 : Enabled@Both directions 2 : Enabled@FW direction 3 : Enabled@REV direction	1 (1 - 3)	681

◆ n5: FEED FORWARD CONTROL

No. (Hex.)	Name	Description	Default (Range)	Ref.
n5-01 (05B0)	n5: FF Control Selection	V/f OLV OLV/PM AOLV/PM EZOLV Sets the feed forward function. 0 : Disabled 1 : Enabled	0 (0, 1)	682
n5-02 (05B1)	Mot Inertia Acceleration Time	V/f OLV OLV/PM AOLV/PM EZOLV Sets the length of time for the motor to accelerate from the stopped to the maximum frequency with a single motor at the rated torque. Inertia Tuning automatically sets the motor acceleration time.	Determined by C6-01, E5-01, and o2-04 (0.001 - 10.000 s)	682
n5-03 (05B2)	FF Control Gain	V/f OLV OLV/PM AOLV/PM EZOLV Sets the ratio between load inertia and motor inertia. Inertia Tuning automatically sets the Feedforward Control Gain value.	1.00 (0.00 - 100.00)	683
n5-04 (05B3) RUN Expert	Speed Response Frequency	V/f OLV OLV/PM AOLV/PM EZOLV Sets the response frequency for the speed reference. Usually it is not necessary to change this parameter.	Determined by A1-02 (0.00 - 500.00 Hz)	683

◆ n6: ONLINE TUNING

No. (Hex.)	Name	Description	Default (Range)	Ref.
n6-01 (0570)	Online Tune Selection	V/f OLV OLV/PM AOLV/PM EZOLV Sets the type of motor data that Online Tuning uses for OLV control. 0 : Disabled 1 : Line-to-Line Resistance Tuning 2 : VoltageAdjustment	0 (0 - 2)	684
n6-05 (05C7) Expert	Online Tune Gain	V/f OLV OLV/PM AOLV/PM EZOLV Sets the compensation gain when *n6-01 = 2 [Online Tune Selection = VoltageAdjustment]*. Usually it is not necessary to change this parameter.	1.0 (0.1 - 50.0)	684

◆ n7: SIMPLE VECTOR TUNING

No. (Hex.)	Name	Description	Default (Range)	Ref.
n7-01 (3111) Expert	LoFreq Damping Gain	V/f OLV OLV/PM AOLV/PM EZOLV Sets the oscillation suppression gain for the low speed range.	1.0 (0.1 - 10.0)	684
n7-05 (3115) Expert	TrqCtrl Response Gain	V/f OLV OLV/PM AOLV/PM EZOLV Sets the response gain related to changes in the load.	50 (10 - 1000)	684
n7-07 (3117) Expert	Speed Calc.Gain1	V/f OLV OLV/PM AOLV/PM EZOLV Sets the speed calculation gain during usual operation. Usually it is not necessary to change this setting.	15.0 Hz (1.0 - 50.0 Hz)	685

No. (Hex.)	Name	Description	Default (Range)	Ref.
n7-08 (3118) Expert	Speed Calc.Gain2	V/f OLV OLV/PM AOLV/PM EZOLV Sets the speed calculation gain during a speed search.	25.0 Hz (1.0 - 50.0 Hz)	685
n7-10 (311A) Expert	Pull-in SwitchSpeed	V/f OLV OLV/PM AOLV/PM EZOLV Sets the speed range to operate with the pull-in current command. Drive rated frequency = 100% value. If there is a large quantity of oscillation when you operate in the low speed range, increase the setting value.	10.0% (0.0 - 100.0%)	685
n7-17 (3122)	Resist.Temp. Compensation	V/f OLV OLV/PM AOLV/PM EZOLV Sets the function to adjust for changes in the motor resistance value caused by changes in the temperature. 1 : Invalid 2 : Valid (1 Time) 3 : Valid (Every Time)	2 (1 to 3)	685
n7-19 (3128) Expert	FluxErr CompGain	V/f OLV OLV/PM AOLV/PM EZOLV Sets the gain for magnetic flux compensation. Usually it is not necessary to change this setting.	5000% (0 - 50000%)	685

◆ n8: PM MOTOR CONTROL TUNING

No. (Hex.)	Name	Description	Default (Range)	Ref.
n8-01 (0540) Expert	PolPos Detection Current	V/f OLV OLV/PM AOLV/PM EZOLV Sets, as a percentage, the Initial Rotor Position Estimated Current, taking the *E5-03 [PM Mot Rated Current (FLA)]* as the 100% value. Usually it is not necessary to change this setting.	50% (0 - 100%)	686
n8-02 (0541) Expert	Pole Align Current Level	V/f OLV OLV/PM AOLV/PM EZOLV Sets the current at the time of polar attraction as a percentage where *E5-03 [PM Mot Rated Current (FLA)]* is 100%. Usually it is not necessary to change this setting.	80% (0 - 150%)	686
n8-11 (054A)	Observ.Calc Gain2	V/f OLV OLV/PM AOLV/PM EZOLV Sets the gain for speed estimation. Usually it is not necessary to change this setting.	Determined by n8-72 (0.0 - 1000.0)	686
n8-14 (054D) Expert	Polar Comp Gain3	V/f OLV OLV/PM AOLV/PM EZOLV Sets the gain for speed estimation. Usually it is not necessary to change this setting.	1.000 (0.000 - 10.000)	686
n8-15 (054E) Expert	Polar Comp Gain4	V/f OLV OLV/PM AOLV/PM EZOLV Sets the gain for speed estimation. Usually it is not necessary to change this setting.	0.500 (0.000 - 10.000)	686
n8-21 (0554) Expert	Mot Back-EMF (Ke) Gain	V/f OLV OLV/PM AOLV/PM EZOLV Sets the gain for speed estimation. Usually it is not necessary to change this setting.	0.90 (0.80 - 1.00)	686
n8-35 (0562)	InitRotorPos Selection	V/f OLV OLV/PM AOLV/PM EZOLV Sets how the drive detects the position of the rotor when the motor starts. **Note:** • When you use an SPM motor, set *n8-35 = 1*. • When you set *n8-35 = 2*, do High Frequency Injection Auto-Tuning. 1 : Pull-In 2 : HiFreq Injection 3 : Pulse Injection	Determined by A1-02 (1 - 3)	687
n8-36 (0563)	HFI Signal Frequency	V/f OLV OLV/PM AOLV/PM EZOLV Sets the injection frequency for high frequency injection. **Note:** • Set *n8-35 = 2 [InitRotorPos Selection = HiFreq Injection]* or *n8-57 = 1 [High-Freq Injection = Enabled]* to enable this parameter. • The drive automatically calculates this value when High Frequency Injection Auto-Tuning completes successfully.	500 Hz (200 - 1000 Hz)	687
n8-37 (0564) Expert	HFI Voltage Amplitude Level	V/f OLV OLV/PM AOLV/PM EZOLV Sets the high frequency injection amplitude as a percentage where 200 V = 100% for 200 V class drives and 400 V = 100% for a 400 V class drives. Usually it is not necessary to change this setting. **Note:** • Set *n8-35 = 2 [InitRotorPos Selection = HiFreq Injection]* or *n8-57 = 1 [High-Freq Injection = Enabled]* to enable this parameter. • The drive automatically calculates this value when High Frequency Injection Auto-Tuning completes successfully.	20.0% (0.0 - 50.0%)	687

No. (Hex.)	Name	Description	Default (Range)	Ref.
n8-39 (0566)	HFI LPF Cutoff Frq	V/f OLV **OLV/PM** **AOLV/PM** EZOLV Sets the low-pass filter shut-off frequency for high frequency injection. **Note:** • Set *n8-35 = 2 [InitRotorPos Selection = HiFreq Injection]* or *n8-57 = 1 [High-Freq Injection = Enabled]* to enable this parameter. • The drive automatically calculates this value when High Frequency Injection Auto-Tuning completes successfully.	250 Hz (0 - 1000 Hz)	687
n8-41 (0568) Expert	HFI PoleDet Pgain	V/f OLV **OLV/PM** **AOLV/PM** EZOLV Sets the response gain for the high frequency injection speed estimation.	2.5 (-10.0 - +10.0)	687
n8-42 (0569) Expert	HFI PoleDet iTime	V/f OLV **OLV/PM** **AOLV/PM** EZOLV Sets the integral time constant for the high frequency injection speed estimation. Usually it is not necessary to change this setting.	0.10 s (0.00 - 9.99 s)	688
n8-45 (0538)	SpdFbck Det.Gain	V/f OLV **OLV/PM** AOLV/PM EZOLV Sets the internal speed feedback detection reduction unit gain as a magnification value. Usually it is not necessary to change this setting.	0.80 (0.00 - 10.00)	688
n8-47 (053A)	Pull-In Comp.Time Constant	V/f OLV **OLV/PM** AOLV/PM EZOLV Sets the time constant the drive uses to align the pull-in current reference value with the actual current value. Usually it is not necessary to change this setting.	5.0 s (0.0 - 100.0 s)	688
n8-48 (053B) RUN	Pull-In Current (for PM Motors)	V/f OLV **OLV/PM** AOLV/PM EZOLV On the basis that parameter *E5-03 [PM Mot Rated Current (FLA)]* is the 100% value, this parameter sets the d-axis current that flows to the motor during run at constant speed as a percentage.	30% (0 - 200%)	688
n8-49 (053C) RUN Expert	Heavy Load Id Current	V/f OLV **OLV/PM** AOLV/PM EZOLV Sets the d-axis current to that the drive will supply to the motor to run it at a constant speed with a heavy load. Considers *E5-03 [PM Mot Rated Current (FLA)]* to be 100%. Usually it is not necessary to change this setting.	Determined by E5-01 (-200.0 - +200.0%)	689
n8-50 (053D) Expert	Medium Load Iq Level (High)	V/f OLV **OLV/PM** AOLV/PM EZOLV Sets the load current level at which heavy load control starts where *E5-03 [PM Mot Rated Current (FLA)]* is 100%. Usually it is not necessary to change this setting.	80% (50 - 255)	689
n8-51 (053E)	Ac/Dec Pull-In Current	V/f OLV **OLV/PM** AOLV/PM **EZOLV** Sets the pull-in current allowed to flow during acceleration/deceleration as a percentage of the motor rated current. **Note:** Parameter *A1-02 [Control Method Selection]* selects which parameter is the motor rated current. • *A1-02 = 5 [PM OLVector]*: *E5-03 [PM Mot Rated Current (FLA)]* • *A1-02 = 8 [EZ Vector]*: *E9-06 [Motor Rated Current]*	Determined by A1-02 (0 - 200%)	689
n8-54 (056D) Expert	Volt-Err Compensation Time	V/f OLV **OLV/PM** AOLV/PM EZOLV Sets the time constant that the drive uses when adjusting for voltage errors.	1.00 s (0.00 - 10.00 s)	689
n8-55 (056E)	Load Inertia	V/f OLV **OLV/PM** AOLV/PM EZOLV Sets the ratio between motor inertia and machine inertia. 1 : <1:10 2 : 1:10-1:30 3 : 1:30-1:50 4 : >1:50	1 (1 - 4)	689
n8-57 (0574)	High-Freq Injection	V/f OLV OLV/PM **AOLV/PM** EZOLV Sets the function that detects motor speed with high frequency injection. **Note:** When you set *n8-57 = 1*, doHigh Frequency Injection Auto-Tuning. 0 : Disabled 1 : Enabled	0 (0, 1)	690
n8-62 (057D) Expert	Output Volt Limit Level	V/f OLV **OLV/PM** **AOLV/PM** **EZOLV** Sets the output voltage limit to prevent saturation of the output voltage. Usually it is not necessary to change this parameter.	200 V Class: 200.0 V, 400 V: 400.0 V (200 V Class: 0.0 to 230.0 V, 400 V Class: 0.0 to 460.0 V)	690
n8-63 (057E) Expert	Output Voltage Limit P Gain	V/f OLV **OLV/PM** **AOLV/PM** EZOLV Sets the proportional gain for output voltage control. Usually it is not necessary to change this setting.	1.00 (0.00 - 100.00)	691
n8-65 (065C) Expert	SpdFbk Gain@OV Suppression	V/f OLV **OLV/PM** AOLV/PM EZOLV Sets the gain of internal speed feedback detection suppression while the overvoltage suppression function is operating as a magnification value. Usually it is not necessary to change this parameter.	1.50 (0.00 - 10.00)	691
n8-69 (065D) Expert	Spd Obs. P Gain Control	V/f OLV OLV/PM **AOLV/PM** EZOLV Usually it is not necessary to change this setting. Sets the Proportional gain that the drive uses for speed estimation.	1.00 (0.00 - 20.00)	691

No. (Hex.)	Name	Description	Default (Range)	Ref.
n8-72 (0655) Expert	Spd Obs. Method Selection	V/f OLV OLV/PM **AOLV/PM** EZOLV Selects the speed estimation method. Usually it is not necessary to change this setting. 1 : Method 1 2 : Method 2	2 (1, 2)	691
n8-74 (05C3) Expert	Light Load Iq Level	V/f OLV **OLV/PM** AOLV/PM EZOLV Set *n8-48 [Pull-In Current (for PM Motors)]* to the percentage of load current (q-axis current) that you will apply, where *E5-03 [PM Mot Rated Current (FLA)] = a setting value of 100%.*	30% (0 - 255%)	691
n8-75 (05C4) Expert	Mid Load Iq Level (Low)	V/f OLV **OLV/PM** AOLV/PM EZOLV Set *n8-78 [Mid Load Id Current]* to the percentage of load current (q-axis current) that you will apply, where *E5-03 [PM Mot Rated Current (FLA)] = a setting value of 100%.*	50% (0 - 255%)	691
n8-77 (05CE) Expert	Hvy Load Iq Level	V/f OLV **OLV/PM** AOLV/PM EZOLV Set *n8-49 [Heavy Load Id Current]* to the percentage of load current (q-axis current) that you will apply, where *E5-03 [PM Mot Rated Current (FLA)] = a setting value of 100%.*	90% (0 - 255%)	692
n8-78 (05F4) RUN Expert	Mid Load Id Current	V/f OLV **OLV/PM** AOLV/PM EZOLV Sets the level of the pull-in current as a percentage, where *E5-03 [PM Mot Rated Current (FLA)] = 100%.*	0% (0 - 255%)	692
n8-79 (05FE)	Pull-In Curr@Deceleration	V/f OLV **OLV/PM** AOLV/PM EZOLV Sets the pull-in current that can flow during deceleration as a percentage of the *E5-03 [PM Mot Rated Current (FLA)]*. **Note:** When *n8-79 = 0*, the drive will use the value set in *n8-51 [Ac/Dec Pull-In Current]*.	50% (0 - 200%)	692
n8-84 (02D3) Expert	Polarity Det Current	V/f OLV **OLV/PM** **AOLV/PM** EZOLV Sets the current that the drive uses to estimate the initial motor magnetic pole as a percentage where *E5-03 [PM Mot Rated Current (FLA)] = 100%.*	100% (0 - 150%)	692
n8-87 (02BC)	O/P VoltLim Method	V/f OLV **OLV/PM** **AOLV/PM** **EZOLV** Sets the method of output voltage limit. If there is vibration in the constant output range, set Feedforward Method. Usually it is not necessary to change this setting. 0 : Feedback Method 1 : Feedforward Method	0 (0, 1)	692
n8-88 (02BD)	VoutLimSw Level	V/f OLV **OLV/PM** **AOLV/PM** **EZOLV** Sets the current level at which output voltage limit sequence selection occurs as a percentage where the motor rated current is 100%. Normally there is no need to change this setting. **Note:** Parameter *A1-02 [Control Method]* selects which parameter is the motor rated current. • A1-02 = 5, 6 [PM OLVector, PM AOLVector]: E5-03 [PM Mot Rated Current (FLA)] • A1-02 = 8 [EZ Vector]: E9-06 [Motor Rated Current]	400% (0 - 400%)	693
n8-89 (02BE)	VoutLimSwHysteresis	V/f OLV **OLV/PM** **AOLV/PM** **EZOLV** Sets the hysteresis width of the current level at which output voltage limit sequence selection occurs as a percentage where the motor rated current is 100%. Normally there is no need to change this setting. **Note:** Parameter *A1-02 [Control Method]* selects which parameter is the motor rated current. • A1-02 = 5, 6 [PM OLVector, PM AOLVector]: E5-03 [PM Mot Rated Current (FLA)] • A1-02 = 8 [EZ Vector]: E9-06 [Motor Rated Current]	3% (0 - 400%)	693
n8-90 (02BF)	VoutLimSwSpeed	V/f OLV **OLV/PM** **AOLV/PM** **EZOLV** Sets the speed level at which output voltage limit sequence selection occurs as a percentage where the maximum output frequency is 100%. Usually it is not necessary to change this setting. **Note:** Parameter *A1-02 [Control Method]* selects which parameter is the maximum output frequency. • A1-02 = 5, 6 [PM OLVector, PM AOLVector]: E1-04 [Max Output Frequency] • A1-02 = 8 [EZ Vector]: E9-02 [Maximum Speed]	200% (0 - 200%)	693
n8-91 (02F7)	VoutLim Id Limit	V/f OLV **OLV/PM** **AOLV/PM** **EZOLV** Sets the limit value of feedback output voltage limit Id operation. Enabled when *n8-87 = 0 [O/P VoltLim Method = Speed Feedback Form]*. Usually it is not necessary to change this setting.	-50% (-200 - 0%)	693

No. (Hex.)	Name	Description	Default (Range)	Ref.
n8-94 (012D) Expert	FluxPos Est.Method	V/f OLV OLV/PM AOLV/PM EZOLV Sets the criteria that the drive uses to find changes in speed or load. Usually it is not necessary to change this setting. 1 : Softstarter 2 : Speed Feedback	2 (1, 2)	693
n8-95 (012E) Expert	FluxPos Est.Filter Time	V/f OLV OLV/PM AOLV/PM EZOLV Sets the time constant of the filter used for the recognition criteria value for speed and load changes. Usually it is not necessary to change this setting.	30 ms (0 - 100 ms)	693

◆ nA: PM MOTOR CONTROL TUNING

No. (Hex.)	Name	Description	Default (Range)	Ref.
nA-01 (3129) Expert	Obs Calc Gain 3	V/f OLV OLV/PM AOLV/PM EZOLV Sets the gain for speed estimation. Usually it is not necessary to change this setting.	30.0 (0.0 - 1000.0)	694

11.12 o: KEYPAD

◆ o1: KEYPAD DISPLAY

No. (Hex.)	Name	Description	Default (Range)	Ref.
o1-01 (0500) RUN	User Monitor Selection	V/f OLV OLV/PM AOLV/PM EZOLV Sets the *U: MONITORS* for the Drive Mode. This parameter is only available when you use an LED keypad.	106 (104 - 855)	696
o1-02 (0501) RUN	Mon.Sel@Power-Up	V/f OLV OLV/PM AOLV/PM EZOLV Sets the monitor item that the keypad screen shows after energizing the drive. Refer to "U: MONITORS" for information about the monitor items that the keypad screen can show. This parameter is only available when you use an LED keypad. 1 : FreqReference (U1-01) 2 : Direction 3 : OutFrequency (U1-02) 4 : OutCurrent (U1-03) 5 : User Monitor (o1-01)	1 (1 - 5)	696
o1-03 (0502)	FrqDisplay Unit Selection	V/f OLV OLV/PM AOLV/PM EZOLV Sets the display units for the frequency reference and output frequency. 0 : 0.01 Hz 1 : 0.01% (100%=E1-04) 2 : rpm 3 : User-selected units	Determined by A1-02 (0 - 3)	696
o1-04 (0503)	V/f Pattern Unit for Display	V/f OLV OLV/PM AOLV/PM EZOLV Sets the setting unit for parameters that set the V/f pattern frequency. 0 : Hz 1 : rpm	Determined by A1-02 (0, 1)	697
o1-05 (0504) RUN	LCD Contrast Adjustment	V/f OLV OLV/PM AOLV/PM EZOLV Sets the contrast of the LCD display on the keypad.	5 (0 - 10)	698
o1-10 (0520)	FrqDisplay Max Value	V/f OLV OLV/PM AOLV/PM EZOLV Sets the value that the drive shows as the maximum output frequency.	Determined by o1-03 (1 - 60000)	698
o1-11 (0521)	FrqDisplay Decimal Places	V/f OLV OLV/PM AOLV/PM EZOLV Sets the number of decimal places for frequency reference and monitor values. 0 : (XXXXX) No Decimal Places 1 : (XXXX.X) 1 Decimal Place 2 : (XXX.XX) 2 Decimal Places 3 : (XX.XXX) 3 Decimal Places	Determined by o1-03 (0 - 3)	698
o1-24 to o1-35: (11AD - 11B8) RUN	Cust.Monitor 1 to 12	V/f OLV OLV/PM AOLV/PM EZOLV Sets a maximum of 12 monitors as user monitors. This parameter is only available when using an LCD keypad.	o1-24: 101 o1-25: 102 o1-26: 103 o1-27 to o1-35: 0 (0, 101 - 999)	698
o1-36 (11B9) RUN	LCD Backlight Brightness	V/f OLV OLV/PM AOLV/PM EZOLV Sets the intensity of the LCD keypad backlight.	3 (1 - 5)	699
o1-37 (11BA) RUN	LCD Blight ON/OFF Selection	V/f OLV OLV/PM AOLV/PM EZOLV Sets the automatic shut off function for the LCD backlight. 0 : OFF 1 : ON	1 (0, 1)	699
o1-38 (11BB) RUN	LCD Blight Off-Delay	V/f OLV OLV/PM AOLV/PM EZOLV Sets the time until the LCD backlight automatically turns off.	60 s (10 - 300 s)	699
o1-39 (11BC) RUN	Show Init Screen	V/f OLV OLV/PM AOLV/PM EZOLV Sets the function to show the LCD keypad initial setup screen each time the drive is energized. This parameter is only available when using an LCD keypad. 0 : No 1 : Yes	1 (0, 1)	699
o1-40 (11BD) RUN	Home Screen Selection Mode	V/f OLV OLV/PM AOLV/PM EZOLV Sets the monitor display mode for the Home screen. This parameter is only available when using an LCD keypad. 0 : Monitors 10 : Bar Graph 11 : Analog Gauge 12 : Trend Plot	0 (0, 10 - 12)	700

No. (Hex.)	Name	Description	Default (Range)	Ref.
o1-41 (11C1) RUN	1stMon Area Selection	V/f OLV OLV/PM AOLV/PM EZOLV Sets the horizontal range used to display the monitor set in *o1-24 [Cust.Monitor 1]* as a bar graph. This parameter is only available when using an LCD keypad. 0 : +/- Area (- o1-42 - o1-42) 1 : + Area (0 - o1-42)	0 (0, 1)	700
o1-42 (11C2) RUN	1stMon Area Setting	V/f OLV OLV/PM AOLV/PM EZOLV Sets the horizontal axis value used to display the monitor set in *o1-24 [Cust.Monitor 1]* as a bar graph. This parameter is only available when using an LCD keypad.	100.0% (0.0 - 100.0%)	700
o1-43 (11C3) RUN	2ndMon Area Selection	V/f OLV OLV/PM AOLV/PM EZOLV Selects the horizontal range used to display the monitor set in *o1-25 [Cust.Monitor 2]* as a bar graph. This parameter is only available when using an LCD keypad. 0 : + - Area (- o1-44 - o1-44) 1 : + Area (0 - o1-44)	0 (0, 1)	700
o1-44 (11C4) RUN	2ndMon Area Setting	V/f OLV OLV/PM AOLV/PM EZOLV Sets the horizontal axis value used to display the monitor set in *o1-25 [Cust.Monitor 2]* as a bar graph. This parameter is only available when using an LCD keypad.	100.0% (0.0 - 100.0%)	700
o1-45 (11C5) RUN	3rdMon Area Selection	V/f OLV OLV/PM AOLV/PM EZOLV Sets the horizontal range used to display the monitor set in *o1-26 [Cust.Monitor 3]* as a bar graph. This parameter is only available when using an LCD keypad. 0 : + - Area (- o1-46 - o1-46) 1 : + Area (0 - o1-46)	0 (0, 1)	700
o1-46 (11C6) RUN	3rdMon Area Setting	V/f OLV OLV/PM AOLV/PM EZOLV Sets the horizontal axis value used to display the monitor set in *o1-26 [Cust.Monitor 3]* as a bar graph. This parameter is only available when using an LCD keypad.	100.0% (0.0 - 100.0%)	701
o1-47 (11C7) RUN	Trend Plot 1 Min Scale Value	V/f OLV OLV/PM AOLV/PM EZOLV Sets the horizontal axis minimum value used to display the monitor set in *o1-24 [Cust. Monitor 1]* as a trend plot. This parameter is only available when using an LCD keypad.	-100.0% (-300.0 - +300.0%)	701
o1-48 (11C8) RUN	Trend Plot 1 Max Scale Value	V/f OLV OLV/PM AOLV/PM EZOLV Sets the horizontal axis maximum value used to display the monitor set in *o1-24 [Cust. Monitor 1]* as a trend plot. This parameter is only available when using an LCD keypad.	100.0% (-300.0 - +300.0%)	701
o1-49 (11C9) RUN	Trend Plot 2 Min Scale Value	V/f OLV OLV/PM AOLV/PM EZOLV Sets the horizontal axis minimum value used to display the monitor set in *o1-25 [Cust. Monitor 2]* as a trend plot. This parameter is only available when using an LCD keypad.	-100.0% (-300.0 - +300.0%)	701
o1-50 (11CA) RUN	Trend Plot 2 Max Scale Value	V/f OLV OLV/PM AOLV/PM EZOLV Sets the horizontal axis maximum value used to display the monitor set in *o1-25 [Cust. Monitor 2]* as a trend plot. This parameter is only available when using an LCD keypad.	100.0% (-300.0 - +300.0%)	701
o1-51 (11CB) RUN	Trend Plot Time Scale Setting	V/f OLV OLV/PM AOLV/PM EZOLV Sets the time scale (horizontal axis) to display the trend plot. When you change this setting, the drive automatically adjusts the data sampling time. This parameter is only available when using an LCD keypad.	300 s (1 - 3600 s)	701
o1-55 (11EE) RUN	AnGauge Area Selection	V/f OLV OLV/PM AOLV/PM EZOLV Sets the range used to display the monitor set in *o1-24 [Custom Monitor 1]* as an analog gauge. This parameter is only available when using an LCD keypad. 0 : + - Area (- o1-56 - o1-56) 1 : + Area (0 - o1-56)	1 (0, 1)	701
o1-56 (11EF) RUN	AnGauge Area Setting	V/f OLV OLV/PM AOLV/PM EZOLV Sets the value used to display the monitor set in *o1-24 [Cust.Monitor 1]* as an analog meter. This parameter is only available when using an LCD keypad.	100.0% (0.0 - 100.0%)	701
o1-58 (3125)	Mot Capacity Unit	V/f OLV OLV/PM AOLV/PM EZOLV Sets the setting unit for parameters that set the motor rated power. 0 : kW 1 : HP	0 (0, 1)	702

◆ o2: KEYPAD OPERATION

No. (Hex.)	Name	Description	Default (Range)	Ref.
o2-01 (0505)	LO/RE Key Selection of Function	V/f OLV OLV/PM AOLV/PM EZOLV Sets the function that lets you use LO/RE to switch between LOCAL and REMOTE Modes. 0 : Disabled 1 : Enabled	1 (0, 1)	702
o2-02 (0506)	STOP Key Selection of Function	V/f OLV OLV/PM AOLV/PM EZOLV Sets the function to use STOP on the keypad to stop the drive when the Run command source for the drive is REMOTE (external) and not assigned to the keypad. 0 : Disabled 1 : Enabled	1 (0, 1)	703
o2-03 (0507)	UserPar Set Default Values	V/f OLV OLV/PM AOLV/PM EZOLV Sets the function to keep the settings of changed parameters as user parameter defaults to use during initialization. 0 : No change 1 : Set defaults 2 : Clear all	0 (0 - 2)	703
o2-04 (0508)	Drive KVA Selection	V/f OLV OLV/PM AOLV/PM EZOLV Sets the Drive Model code. Set this parameter after replacing the control board.	Determined by the drive (-)	703
o2-05 (0509)	LCD FreqRef Mode@Home Screen	V/f OLV OLV/PM AOLV/PM EZOLV Sets the function that makes it necessary to push ↵ to use the keypad to change the frequency reference value while in Drive Mode. 0 : Disabled 1 : Enabled	0 (0, 1)	704
o2-06 (050A)	Keypad Disconnect Detection	V/f OLV OLV/PM AOLV/PM EZOLV Sets the function that stops the drive if you disconnect the keypad connection cable from the drive or if you damage the cable while the keypad is the Run command source. 0 : Disabled 1 : Enabled	0 (0, 1)	704
o2-07 (0527)	Keypad Dir@Power-Up	V/f OLV OLV/PM AOLV/PM EZOLV Sets the direction of motor rotation when the drive is energized and the keypad is the Run command source. 0 : Forward 1 : Reverse	0 (0, 1)	704
o2-09 (050D)	Region Code for Initialization	-	-	705
o2-19 (061F) Expert	Parameter Write during Uv	V/f OLV OLV/PM AOLV/PM EZOLV Lets you change parameters during *Uv [Undervoltage]*. 0 : Disable 1 : Enable	0 (0, 1)	705
o2-23 (11F8) RUN	Ext24V Off Warning Display	V/f OLV OLV/PM AOLV/PM EZOLV Sets the function to give a warning if the backup external 24 V power supply turns off when the main circuit power supply is in operation. 0 : Disabled 1 : Enabled	0 (0, 1)	705
o2-26 (1563)	Ext24V Mode Warning Display	V/f OLV OLV/PM AOLV/PM EZOLV When you connect a backup external 24 V power supply, this parameter sets the function to trigger an alarm when the main circuit power supply voltage decreases. **Note:** The drive will not run when it is operating from one 24-V external power supply. 0 : Disabled 1 : Enabled	0 (0, 1)	705
o2-27 (1565)	BLE Disconn. Selection@BLE Ctrl	V/f OLV OLV/PM AOLV/PM EZOLV Sets drive operation if the Bluetooth device is disconnected when you operate the drive in Bluetooth Mode. 0 : Ramp->Stop 1 : Coast->Stop 2 : Fast Stop (C1-09) 3 : Alarm Only 4 : No Alarm Display	3 (0 - 4)	705

◆ o3: COPY FUNCTION

No. (Hex.)	Name	Description	Default (Range)	Ref.
o3-01 (0515)	COPY Keypad Selection of Mode	V/f OLV OLV/PM AOLV/PM EZOLV Sets the function that saves and copies drive parameters to a different drive with the keypad. 0 : Copy Select 1 : Bck (Drive->OPE) 2 : Res (OPE->Drive) 3 : Verify (Check) 4 : Del (Clear OPE Memory)	0 (0 - 4)	706
o3-02 (0516)	COPY Allow Selection	V/f OLV OLV/PM AOLV/PM EZOLV Sets the copy function when *o3-01 = 1 [COPY Keypad Selection of Mode = Bck (Drive->OPE)]*. 0 : Disabled 1 : Enabled	0 (0, 1)	706
o3-04 (0B3E)	COPY Memory Selection	V/f OLV OLV/PM AOLV/PM EZOLV Sets the storage location for drive parameters when you back up and restore parameters. This parameter is only available when using an LCD keypad. 0 : Memory 1 1 : Memory 2 2 : Memory 3 3 : Memory 4	0 (0 - 3)	706
o3-05 (0BDA)	COPY Items Selection	V/f OLV OLV/PM AOLV/PM EZOLV Sets which parameters are backed up, restored, and referenced. This parameter is only available when using an LCD keypad. 0 : Std 1 : Std+Solution	0 (0, 1)	706
o3-06 (0BDE)	AutoBackup Selection	V/f OLV OLV/PM AOLV/PM EZOLV Sets the function that automatically backs up parameters. This parameter is only available when using an LCD keypad. 0 : Disabled 1 : Enabled	1 (0, 1)	707
o3-07 (0BDF)	AutoBackup Lapse	V/f OLV OLV/PM AOLV/PM EZOLV Sets the interval at which the automatic parameter backup function saves parameters from the drive to the keypad. **Note:** This parameter is only available when using an LCD keypad. 1 : 10 minutes 2 : 30 minutes 3 : 60 minutes 4 : 12 hours	2 (1 - 4)	707

◆ o4: MAINTENANCE MONITORS

No. (Hex.)	Name	Description	Default (Range)	Ref.
o4-01 (050B)	Cum.Oper TimeSetting	V/f OLV OLV/PM AOLV/PM EZOLV Sets the initial value of the cumulative drive operation time in 10-hour units.	0 h (0 - 9999 h)	707
o4-02 (050C)	Cum.Oper TimeSelect	V/f OLV OLV/PM AOLV/PM EZOLV Sets the condition that counts the cumulative operation time. 1 : Log Power-On Time 2 : Log Run Time	1 (1, 2)	708
o4-03 (050E)	Fan.Oper Setting	V/f OLV OLV/PM AOLV/PM EZOLV Sets the value from which to start the cumulative drive cooling fan operation time in 10-hour units.	0 h (0 - 9999 h)	708
o4-05 (051D)	Cap.Maint.Setting	V/f OLV OLV/PM AOLV/PM EZOLV Sets the *U4-05 [Capacitor Maintenance]* monitor value.	0% (0 - 150%)	708
o4-07 (0523)	PreChgRly Preset Maintenance Cnt	V/f OLV OLV/PM AOLV/PM EZOLV Sets the *U4-06 [SoftChgRelay Maint]* monitor value.	0% (0 - 150%)	708
o4-09 (0525)	IGBT Preset Maintenance Cnt	V/f OLV OLV/PM AOLV/PM EZOLV Sets the *U4-07 [IGBT Maintenance]* monitor value.	0% (0 - 150%)	708
o4-11 (0510)	Flt.History Initialization	V/f OLV OLV/PM AOLV/PM EZOLV Resets the records of Monitors *U2: FAULT* and *U3: FAULT HISTORY*. 0 : No Reset 1 : Reset	0 (0, 1)	709

No. (Hex.)	Name	Description	Default (Range)	Ref.
o4-12 (0512)	kWh Monitor Initialization	V/f OLV OLV/PM AOLV/PM EZOLV Resets the monitor values for *U4-10 [kWh Lower 4Digits]* and *U4-11 [kWh Upper 5Digits]*. 0 : No Reset 1 : Reset	0 (0, 1)	709
o4-13 (0528)	NumOfRunCom Init Counter	V/f OLV OLV/PM AOLV/PM EZOLV Resets the monitor values for *U4-02 [Num of Run Commands]*, *U4-24 [No of Travels (L)]*, and *U4-25 [No of Travels(H)]*. 0 : No Reset 1 : Reset	0 (0, 1)	709
o4-22 (154F) RUN	Time Format	V/f OLV OLV/PM AOLV/PM EZOLV Sets the time display format. This parameter is only available when using an LCD keypad. 0 : 24 Hour Clock 1 : 12 Hour Clock 2 : 12 Hour JP Clock	0 (0 - 2)	709
o4-23 (1550) RUN	Date Format	V/f OLV OLV/PM AOLV/PM EZOLV Sets the date display format. This parameter is only available when using an LCD keypad. 0 : YYYY/MM/DD 1 : DD/MM/YYYY 2 : MM/DD/YYYY	0 (0 - 2)	709
o4-24 (310F) RUN	bAT Detection Selection	V/f OLV OLV/PM AOLV/PM EZOLV Sets the operation when the drive detects *bAT [Keypad Battery Low Voltage]* and *TiM [Keypad Time Not Set]*. This parameter is only available when you use an LCD keypad. 0 : Disabled 1 : Enable (Alarm Detected) 2 : Enable (Fault Detected)	0 (0 - 2)	710

◆ o5: DATA LOGGER

No. (Hex.)	Name	Description	Default (Range)	Ref.
o5-01 (1551) RUN	Log Start Selection	V/f OLV OLV/PM AOLV/PM EZOLV Sets the data log function. This parameter is only available when using an LCD keypad. 0 : OFF 1 : ON (Data Logging)	0 (0 - 1)	712
o5-02 (1552) RUN	Log Sample Lapse	V/f OLV OLV/PM AOLV/PM EZOLV Sets the data log sampling cycle. This parameter is only available when using an LCD keypad.	1000 ms (100 - 60000 ms)	713
o5-03 (1553) RUN	Log Mon Data 1	V/f OLV OLV/PM AOLV/PM EZOLV Sets the data log monitor. This parameter is only available when using an LCD keypad.	101 (000, 101 - 999)	713
o5-04 (1554) RUN	Log Mon Data 2	V/f OLV OLV/PM AOLV/PM EZOLV Sets the data log monitor. This parameter is only available when using an LCD keypad.	102 (000, 101 - 999)	713
o5-05 (1555) RUN	Log Mon Data 3	V/f OLV OLV/PM AOLV/PM EZOLV Sets the data log monitor. This parameter is only available when using an LCD keypad.	103 (000, 101 - 999)	713
o5-06 (1556) RUN	Log Mon Data 4	V/f OLV OLV/PM AOLV/PM EZOLV Sets the data log monitor. This parameter is only available when using an LCD keypad.	107 (000, 101 - 999)	713
o5-07 (1557) RUN	Log Mon Data 5	V/f OLV OLV/PM AOLV/PM EZOLV Sets the data log monitor. This parameter is only available when using an LCD keypad.	108 (000, 101 - 999)	714
o5-08 (1558) RUN	Log Mon Data 6	V/f OLV OLV/PM AOLV/PM EZOLV Sets the data log monitor. This parameter is only available when using an LCD keypad.	000 (000, 101 - 999)	714
o5-09 (1559) RUN	Log Mon Data 7	V/f OLV OLV/PM AOLV/PM EZOLV Sets the data log monitor. This parameter is only available when using an LCD keypad.	000 (000, 101 - 999)	714
o5-10 (155A) RUN	Log Mon Data 8	V/f OLV OLV/PM AOLV/PM EZOLV Sets the data log monitor. This parameter is only available when using an LCD keypad.	000 (000, 101 - 999)	714

No. (Hex.)	Name	Description	Default (Range)	Ref.
o5-11 (155B) RUN	Log Mon Data 9	V/f OLV **OLV/PM** AOLV/PM EZOLV Sets the data log monitor. This parameter is only available when using an LCD keypad.	000 (000, 101 - 999)	714
o5-12 (155C) RUN	Log Mon Data 10	V/f OLV **OLV/PM** AOLV/PM EZOLV Sets the data log monitor. This parameter is only available when using an LCD keypad.	000 (000, 101 - 999)	715

11.13 q: Q2PACK PARAMETERS

◆ q1-01 to q8-40: Q2pack Parameters

No. (Hex.)	Name	Description	Default (Range)
q1-01 to q8-40 (1600 - 17E7)	Reserved for Q2pack	V/f OLV OLV/PM AOLV/PM EZOLV Refer to “Q2pack Operation Manual”.	These parameters are reserved for use with Q2pack.

11.14 r: Q2PACK JOINTS

◆ r1: Q2PACK JOINTS

No. (Hex.)	Name	Description	Default (Range)
r1-01 to r1-40: (1840 - 1867)	Connection 1a to Connection 20b	V/f OLV OLV/PM AOLV/PM EZOLV Q2pack Joints Parameters 1 to 20 (Upper / Lower)	0 (0 - FFFFH)

11.15 T: AUTOTUNING

◆ T0: TUNE MODE

No. (Hex.)	Name	Description	Default (Range)	Ref.
T0-00 (1197)	Tune Mode Selection	V/f OLV OLV/PM AOLV/PM EZOLV Sets the type of Auto-Tuning. 0 : Motor Parameter Tuning 1 : Control Tuning	0 (0, 1)	716

◆ T1: INDUCTION MOTOR

No. (Hex.)	Name	Description	Default (Range)	Ref.
T1-00 (0700)	Mot1/Mot2 Selection	V/f OLV OLV/PM AOLV/PM EZOLV Sets which motor to tune when motor 1/2 switching is enabled. You can only use the keypad to set this parameter. You cannot use external input terminals to set it. **Note:** Set *H1-xx = 61 [Motor 2 Select]* to enable this parameter. When *H1-xx ≠ 61* the keypad will not show this parameter. 1 : Motor 1 (sets E1-xx, E2-xx) 2 : Motor 2 (sets E3-xx, E4-xx)	1 (1, 2)	716
T1-01 (0701)	Auto-tuning Mode Selection	V/f OLV OLV/PM AOLV/PM EZOLV Sets the type of Auto-Tuning. 0 : Rotary Auto Tune 1 : Static1 AutoTune 2 : Static (R)	Determined by A1-02 (Determined by A1-02)	716
T1-02 (0702)	Motor Rated Power	V/f OLV OLV/PM AOLV/PM EZOLV Uses the units set in *o1-58 [Mot Capacity Unit]* to set the motor rated output power.	Determined by o2-04, C6-01 (0.00 - 650.00 kW)	717
T1-03 (0703)	Motor Rated Voltage	V/f OLV OLV/PM AOLV/PM EZOLV Sets the rated voltage (V) of the motor. Enter the base speed voltage for constant output motors.	Determined by o2-04, C6-01 (200 V Class: 0.0 - 255.5 V, 400 V Class: 0.0 - 511.0 V)	717
T1-04 (0704)	Motor Rated Current	V/f OLV OLV/PM AOLV/PM EZOLV Sets the rated current (A) of the motor.	Determined by o2-04 (10% to 200% of the drive rated current)	717
T1-05 (0705)	Motor Base Frequency	V/f OLV OLV/PM AOLV/PM EZOLV Sets the base frequency (Hz) of the motor.	50.0 Hz (0.0 - 590.0 Hz)	717
T1-06 (0706)	Motor Poles Number	V/f OLV OLV/PM AOLV/PM EZOLV Sets the number of motor poles.	4 (2 to 120)	717
T1-07 (0707)	Motor Base Speed	V/f OLV OLV/PM AOLV/PM EZOLV Sets the motor base speed for Auto-Tuning (min^{-1} (r/min)).	1450 min^{-1} (r/min) (0 - 35400 min^{-1} (r/min))	717
T1-09 (0709)	Motor NoLoad Current	V/f OLV OLV/PM AOLV/PM EZOLV Sets the no-load current of the motor.	- (0A - T1-04; max. of 2999.9)	718
T1-10 (070A)	Motor Rated Slip Frequency	V/f OLV OLV/PM AOLV/PM EZOLV Sets motor rated slip.	- (0.000 - 20.000 Hz)	718
T1-11 (070B)	Motor Iron Loss	V/f OLV OLV/PM AOLV/PM EZOLV Sets the iron loss for calculating the energy-saving coefficient.	Determined by E2-11 or E4-11 (0 - 65535 W)	718

No. (Hex.)	Name	Description	Default (Range)	Ref.
T1-12 (0BDB)	Test Mode Selection	V/f **OLV** OLV/PM AOLV/PM EZOLV Sets the function to enable Test Mode after Stationary Auto-Tuning. When you can operate the motor with a light load attached after Stationary Auto-Tuning is complete, enable this parameter. **Note:** You must first set *T1-10 = 0 [Motor Rated Slip Frequency = 0 Hz]* to enable this parameter. 0 : No 1 : Yes	0 (0, 1)	718
T1-13 (0BDC)	No-load Voltage	V/f **OLV** OLV/PM AOLV/PM EZOLV Sets the no-load voltage of the motor. When the no-load voltage at rated speed is available, for example on the motor test report, set the voltage in this parameter. If the no-load voltage is not available, do not change this parameter. **Note:** To get the same qualities as a Yaskawa 1000-series drive or previous series drive, set this parameter = *T1-03 [Motor Rated Voltage]*.	T1-03 × 0.9 (200 V Class: 0.0 - 255.0 V, 400 V Class: 0.0 - 510.0 V)	718

◆ T2: PM MOTOR

No. (Hex.)	Name	Description	Default (Range)	Ref.
T2-01 (0750)	PM AutoTune Mode Select	V/f OLV **OLV/PM** AOLV/PM EZOLV Sets the type of Auto-Tuning for PM motors. 0 : PM Motor Parameter Settings 1 : PM Static Full AutoTune 2 : PM Static R Autotune 4 : PM Rotary Autotune 5 : High Frequency Injection	0 (Determined by A1-02)	719
T2-02 (0751)	PMMot Code Selection	V/f OLV **OLV/PM** AOLV/PM EZOLV If the drive is operating an SMRD, SMRA, or SSR1 series Yaskawa PM motor, enter the PM motor code in to align with the rotation speed and motor output.	Determined by A1-02 and o2-04 (0000 - FFFF)	719
T2-03 (0752)	PMMot Motor Type	V/f OLV **OLV/PM** AOLV/PM EZOLV Sets the type of PM motor the drive will operate. 0 : IPM Motor 1 : SPM Motor	1 (0, 1)	719
T2-04 (0730)	PMMot Rated Power	V/f OLV **OLV/PM** AOLV/PM EZOLV Uses the units set in *o1-58 [Mot Capacity Unit]* to set the PM motor rated output power.	Determined by o2-04, C6-01 (0.00 - 650.00 kW)	719
T2-05 (0732)	PMMot Rated Voltage	V/f OLV **OLV/PM** AOLV/PM EZOLV Sets the rated voltage (V) of the motor.	200 V Class: 200.0 V, 400 V: 400.0 V (200 V Class: 0.0 - 255.0 V, 400 V Class: 0.0 - 510.0 V)	720
T2-06 (0733)	PMMot Rated Current	V/f OLV **OLV/PM** AOLV/PM EZOLV Sets the rated current (A) of the motor.	Determined by o2-04 (10% to 200% of the drive rated current)	720
T2-07 (0753)	PMMot Base Frequency	V/f OLV **OLV/PM** AOLV/PM EZOLV Sets the base frequency (Hz) of the motor.	87.5 Hz (0.0 - 590.0 Hz)	720
T2-08 (0734)	PMMot Poles Number	V/f OLV **OLV/PM** AOLV/PM EZOLV Sets the number of motor poles.	6 (2 - 48)	720
T2-09 (0731)	PMMot Base Speed	V/f OLV OLV/PM **AOLV/PM** EZOLV Sets the motor base speed (min^{-1} (r/min)).	1750 min^{-1} (r/min) (0 - 34500 min^{-1} (r/min))	720
T2-10 (0754)	PMMot Stator Resistance	V/f OLV **OLV/PM** AOLV/PM EZOLV Sets the stator resistance for each motor phase. **Note:** This parameter does not set line-to-line resistance.	Determined by T2-02 (0.000 - 65.000 Ω)	720
T2-11 (0735)	PMMot dAxis Inductance	V/f OLV **OLV/PM** AOLV/PM EZOLV Sets the d-axis inductance of the motor on a per phase basis.	Determined by T2-02 (0.00 - 600.00 mH)	720
T2-12 (0736)	PMMot qAxis Inductance	V/f OLV **OLV/PM** AOLV/PM EZOLV Sets the q-Axis inductance of the motor on a per phase basis.	Determined by T2-02 (0.00 - 600.00 mH)	720
T2-13 (0755)	KE Unit Selection	V/f OLV **OLV/PM** AOLV/PM EZOLV Sets the units that the drive uses to set the induced voltage constant. 0 : mV/rpm 1 : mV/(rad/sec)	1 (0, 1)	720

No. (Hex.)	Name	Description	Default (Range)	Ref.
T2-14 (0737)	PMMot KE Voltage Constant	V/f OLV **OLV/PM** **AOLV/PM** EZOLV Sets the motor induced voltage constant (Ke).	Determined by T2-13 (0.0 - 2000.0)	721
T2-15 (0756)	PullInCurrLv@PM Motor Tuning	V/f OLV **OLV/PM** **AOLV/PM** EZOLV Sets the level of the pull-in current as a percentage of *E5-03 [PM Mot Rated Current (FLA)]*. Usually it is not necessary to change this setting.	30% (0 - 120%)	721

◆ T3: ASR

No. (Hex.)	Name	Description	Default (Range)	Ref.
T3-00 (1198)	Control Loop Tune Selection	**V/f** **OLV** **OLV/PM** **AOLV/PM** **EZOLV** Sets the type of Control Auto-Tuning. 2 : Dec Rate Tuning 3 : KEB Tuning	2 (2, 3)	721

◆ T4: SIMPLE VECTOR

No. (Hex.)	Name	Description	Default (Range)	Ref.
T4-01 (3130)	EZ Tune Mode Selection	V/f OLV OLV/PM AOLV/PM **EZOLV** Sets the type of Auto-Tuning for EZOLV control. 0 : Motor Constant 1 : Static R Autotune	0 (0, 1)	721
T4-02 (3131)	Motor Type Selection	V/f OLV OLV/PM AOLV/PM **EZOLV** Sets the type of motor. 0 : IM 1 : PM 2 : SynRM	0 (0, 1, 2)	722
T4-04 (3133)	Motor Rated Revolutions	V/f OLV OLV/PM AOLV/PM **EZOLV** Sets rated rotation speed (min^{-1}) of the motor.	- ((40 Hz to 120 Hz) × 60 × 2/E9-08)	722
T4-05 (3134)	Motor Rated Frequency	V/f OLV OLV/PM AOLV/PM **EZOLV** Sets the rated frequency (Hz) of the motor.	Determined by E9-01 and o2-04 (40.0 - 120.0 Hz)	722
T4-06 (3135)	Motor Rated Voltage	V/f OLV OLV/PM AOLV/PM **EZOLV** Sets the rated voltage (V) of the motor.	200 V Class: 200.0 V, 400 V: 400.0 V (200 V Class: 0.0 - 255.0 V,400 V Class: 0.0 - 510.0 V)	722
T4-07 (3136)	Motor Rated Current	V/f OLV OLV/PM AOLV/PM **EZOLV** Sets the rated current (A) of the motor.	Determined by o2-04, C6-01 (10% to 200% of the drive rated current)	722
T4-08 (3137)	Motor Rated Capacity	V/f OLV OLV/PM AOLV/PM **EZOLV** Sets the motor rated power in the units set in *o1-58 [Mot Capacity Unit]*.	Determined by E9-10 (0.10 - 650.00 kW)	722
T4-09 (3138)	Motor Poles Number	V/f OLV OLV/PM AOLV/PM **EZOLV** Sets the number of motor poles.	Determined by E9-01 (2 - 48)	723

11.16 U: MONITORS

◆ U1: STATUS

No. (Hex.)	Name	Description	MFAO Signal Level
U1-01 (0040)	Frequency Reference	V/f OLV OLV/PM AOLV/PM EZOLV Shows the actual frequency reference value. Parameter *o1-03 [FrqDisplay Unit Selection]* sets the display units. Unit: 0.01 Hz	10 V = Maximum frequency (-10 V to +10 V)
U1-02 (0041)	Output Frequency	V/f OLV OLV/PM AOLV/PM EZOLV Shows the actual output frequency. Parameter *o1-03 [FrqDisplay Unit Selection]* sets the display units. Unit: 0.01 Hz	10 V = Maximum frequency (-10 V to +10 V)
U1-03 (0042)	Output Current	V/f OLV OLV/PM AOLV/PM EZOLV Shows the actual output current. The keypad shows the value of *U1-03* in amperes (A). When looking at the monitor through Modbus communications, the current is "8192 = drive rated current (A)". Calculate the current from the monitor value that is in at Modbus communications using "Numerals being displayed / 8192 × drive rated current (A). Unit: When the drive model changes, the display units for this parameter also change. • 0.01 A units: 2001 to 2042, B001 to B018, 4001 to 4023 • 0.1A units: 2056 to 2082, 4031 to 4060	10 V = Drive rated current
U1-04 (0043)	Control Method	V/f OLV OLV/PM AOLV/PM EZOLV Shows the drive control method. 0 : V/f Control 2 : OLVector 5 : PM OLVector 6 : PM AOLVector 8 : EZ Vector	No signal output available
U1-05 (0044)	Motor Speed	V/f OLV OLV/PM AOLV/PM EZOLV Shows the actual detected motor speed. Parameter *o1-03 [FrqDisplay Unit Selection]* sets the display units. Unit: 0.01 Hz	10 V = Maximum frequency (-10 V to +10 V)
U1-06 (0045)	Output Voltage Ref	V/f OLV OLV/PM AOLV/PM EZOLV Shows the output voltage reference. Unit: 0.1 V	200 V class: 10 V = 200 Vrms 400 V class: 10 V = 400 Vrms
U1-07 (0046)	DC Bus Voltage	V/f OLV OLV/PM AOLV/PM EZOLV Shows the DC bus voltage. Unit: 1 V	200 V class: 10 V = 400 V 400 V class: 10 V = 800 V
U1-08 (0047)	Output Power	V/f OLV OLV/PM AOLV/PM EZOLV Shows the internally-calculated output power. Changing the setting of *A1-02 [Control Method]* also changes the signal level of the analog output. • A1-02 = 0: Drive capacity (kW) • A1-02 = 2: *Motor Rated Power (kW) [E2-11]* • A1-02 = 5, 6: *PM Mot Rated Power (kW) [E5-02]* • A1-02 = 8: *Motor Rated Power (kW) [E9-07]* Unit: When the drive model changes, the display units for this parameter also change. • 0.01 A units: 2001 to 2042, B001 to B018, 4001 to 4023 • 0.1A units: 2056 to 2082, 4031 to 4060	10 V: Drive capacity (motor rated power) kW (-10 V to +10 V)
U1-09 (0048)	Torque Reference	V/f OLV OLV/PM AOLV/PM EZOLV Shows the internal torque reference value. Unit: 0.1%	10 V = Motor rated torque (-10 V to +10 V)
U1-10 (0049)	In Terminal Status	V/f OLV OLV/PM AOLV/PM EZOLV Shows the status of the MFDO terminal where '1' = ON and '0' = OFF. For example, *U1-10* shows 00000101 when terminals DI1 and DI3 are ON. bit0 : Terminal DI1 (MFDI 1) bit1 : Terminal DI2 (MFDI 2) bit2 : Terminal DI3 (MFDI 3) bit3 : Terminal DI4 (MFDI 4) bit4 : Terminal DI5 (MFDI 5) bit5 : Terminal DI6 (MFDI 6) bit6 : Terminal DI7 (MFDI 7) bit7 : Not used (normal value of ['0']).	No signal output available

No. (Hex.)	Name	Description	MFAO Signal Level
U1-11 (004A)	Out Terminal Status	V/f OLV OLV/PM AOLV/PM EZOLV Shows the status of the MFDO terminal where 1 = (ON) and 0 = (OFF). For example, *U1-11* shows 00000011 when terminals NO and DO2 are ON. bit0 : Terminal NO/NC-CM bit1 : Terminal DO1-O1C bit2 : Terminal DO2-O2C bit3 : Not used (normal value of [0]). bit4 : Not used (normal value of [0]). bit5 : Not used (normal value of [0]). bit6 : Not used (normal value of [0]). bit7 : Not used (normal value of [0]).	No signal output available
U1-12 (004B)	Drive Status	V/f OLV OLV/PM AOLV/PM EZOLV Shows drive status where 1 = ON and 0 = OFF. For example, *U1-12* shows 00000011 during run with the Reverse Run command. bit0 : During Run bit1 : During zero-speed bit2 : During reverse bit3 : During fault reset signal input bit4 : During speed agreement bit5 : Drive Ready bit6 : During minor fault detection bit7 : During fault detection	No signal output available
U1-13 (004E)	Terminal AI1 InputLv	V/f OLV OLV/PM AOLV/PM EZOLV Shows the signal level of terminal AI1. Unit: 0.1%	10 V = 100% (-10 V to +10 V)
U1-14 (004F)	Terminal AI2 InputLv	V/f OLV OLV/PM AOLV/PM EZOLV Shows the signal level of terminal AI2. Unit: 0.1%	10 V = 100% (-10 V to +10 V)
U1-16 (0053)	SFS Output Frequency	V/f OLV OLV/PM AOLV/PM EZOLV Shows the output frequency after soft start. Shows the frequency with acceleration and deceleration times and S-curves. Parameter *o1-03 [FrqDisplay Unit Selection]* sets the display units. Unit: 0.01 Hz	10 V = Maximum frequency (-10 V to +10 V)
U1-18 (0061)	oPE Fault Parameter	V/f OLV OLV/PM AOLV/PM EZOLV Shows the parameter number that caused the *oPE02 [Parameter Range Setting Error]* or *oPE08 [Parameter Selection Error]*.	No signal output available
U1-19 (0066)	Modbus Err.Code	V/f OLV OLV/PM AOLV/PM EZOLV Shows the contents of the Modbus communication error where 1 ="error" and 0 = "no error". For example, *U1-19* shows 00000001 when the drive detects a CRC error. bit0 : CRC Error bit1 : Data Length Error bit2 : Not used (normal value of [0]). bit3 : Parity Error bit4 : Overrun Error bit5 : Framing Error bit6 : Timed Out bit7 : Not used (normal value of [0]).	No signal output available
U1-24 (007D)	Input Pulse Monitor	V/f OLV OLV/PM AOLV/PM EZOLV Shows the frequency to pulse train input terminal PI. Unit: 1 Hz	Determined by H6-02
U1-25 (004D)	SoftNumber Flash	V/f OLV OLV/PM AOLV/PM EZOLV Shows the ID.	No signal output available
U1-26 (005B)	SoftNumber ROM	V/f OLV OLV/PM AOLV/PM EZOLV Shows the ROM ID.	No signal output available
U1-50 (1199) Expert	Virt. Analog Input	V/f OLV OLV/PM AOLV/PM EZOLV Shows the virtual analog input value.	Determined by H7-40
U1-91 (154E) Expert	Output Voltage	V/f OLV OLV/PM AOLV/PM EZOLV Shows the drive internal output voltage reference. Unit: 0.1 V	200 V class: 10 V = 200 Vrms 400 V class: 10 V = 400 Vrms

◆ U2: FAULT

No. (Hex.)	Name	Description	MFAO Signal Level
U2-01 (0080)	Current Fault	V/f OLV OLV/PM AOLV/PM EZOLV Shows the fault that the drive has when viewing the monitor.	No signal output available
U2-02 (0081)	Previous Fault	V/f OLV OLV/PM AOLV/PM EZOLV Shows the fault that occurred most recently.	No signal output available
U2-03 (0082)	FreqRef@PrevFault	V/f OLV OLV/PM AOLV/PM EZOLV Shows the frequency reference at the fault that occurred most recently. Use *U1-01 [Frequency Reference]* to monitor the actual frequency reference value. Unit: 0.01 Hz	No signal output available
U2-04 (0083)	OutFreq@PrevFault	V/f OLV OLV/PM AOLV/PM EZOLV Shows the output frequency at the fault that occurred most recently. Use *U1-02 [Output Frequency]* to monitor the actual output frequency. Unit: 0.01 Hz	No signal output available
U2-05 (0084)	OutCurr@PrevFault	V/f OLV OLV/PM AOLV/PM EZOLV Shows the output current at the fault that occurred most recently. Use *U1-03 [Output Current]* to monitor the actual output current. The keypad shows the value of *U1-03* in amperes (A). When looking at the monitor through Modbus communications, the current is "8192 = drive rated current (A)". Calculate the current from the monitor value that is in at Modbus communications using "Numerals being displayed / 8192 × drive rated current (A). Unit: When the drive model changes, the display units for this parameter also change. • 0.01 A units: 2001 to 2042, B001 to B018, 4001 to 4023 • 0.1A units: 2056 to 2082, 4031 to 4060	No signal output available
U2-06 (0085)	MotorSpd@PrevFault	V/f OLV OLV/PM AOLV/PM EZOLV Shows the motor speed at the fault that occurred most recently. Use *U1-05 [Motor Speed]* to monitor the actual motor speed. Unit: 0.01 Hz	No signal output available
U2-07 (0086)	OutVolt@PrevFault	V/f OLV OLV/PM AOLV/PM EZOLV Shows the output voltage reference at the fault that occurred most recently. Use *U1-06 [Output Voltage Ref]* to monitor the actual output voltage reference. Unit: 0.1 V	No signal output available
U2-08 (0087)	DCBusVolt@PrevFault	V/f OLV OLV/PM AOLV/PM EZOLV Shows the DC bus voltage at the fault that occurred most recently. Use *U1-07 [DC Bus Voltage]* to monitor the actual DC bus voltage. Unit: 1 V	No signal output available
U2-09 (0088)	OutPow@PrevFault	V/f OLV OLV/PM AOLV/PM EZOLV Shows the output power at the fault that occurred most recently. Use *U1-08 [Output Power]* to monitor the actual output power. Unit: 0.1 kW	No signal output available
U2-10 (0089)	TrqRef@PrevFault	V/f OLV OLV/PM AOLV/PM EZOLV Shows the torque reference at the fault that occurred most recently as a percentage of the motor rated torque. Use *U1-09 [Torque Reference]* to monitor the actual torque reference. Unit: 0.1%	No signal output available
U2-11 (008A)	InStat@PrevFault	V/f OLV OLV/PM AOLV/PM EZOLV Shows the status of the MFDI terminals at the most recent fault where ' ' = ON and ' ' = OFF. For example, *U2-11* shows 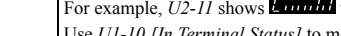 when terminals DI1 and DI3 are ON. Use *U1-10 [In Terminal Status]* to monitor the actual MFDI terminal status. bit0 : Terminal DI1 bit1 : Terminal DI2 bit2 : Terminal DI3 bit3 : Terminal DI4 bit4 : Terminal DI5 bit5 : Terminal DI6 bit6 : Terminal DI7 bit7 : Not used (normal value of [']).	No signal output available

No. (Hex.)	Name	Description	MFAO Signal Level
U2-12 (008B)	OutStat@PrevFault	V/f OLV OLV/PM AOLV/PM EZOLV Shows the status of the MFDO terminals at the most recent fault where 1 = ON and 0 = OFF. For example, *U2-12* shows 00000011 when terminals NO and DO2 are ON. Use *U1-11 [Out Terminal Status]* to monitor the actual MFDO terminal status. bit0 : Terminal NO/NC-CM bit1 : Terminal DO1-O1C bit2 : Terminal DO2-O2C bit3 : Not used (normal value of [0]). bit4 : Not used (normal value of [0]). bit5 : Not used (normal value of [0]). bit6 : Not used (normal value of [0]). bit7 : Not used (normal value of [0]).	No signal output available
U2-13 (008C)	DrvStat@PrevFault	V/f OLV OLV/PM AOLV/PM EZOLV Shows the status of the MFDO terminals at the most recent fault where 1 = ON and 0 = OFF. For example, *U2-13* shows 00000001 during run. Use *U1-12 [Drive Status]* to monitor the actual MFDO terminal status. bit0 : During Run bit1 : During zero-speed bit2 : During reverse bit3 : During fault reset signal input bit4 : During speed agreement bit5 : Drive Ready bit6 : During minor fault detection bit7 : During fault detection	No signal output available
U2-14 (008D)	OpeTime@PreFault	V/f OLV OLV/PM AOLV/PM EZOLV Shows the cumulative operation time of the drive at the fault that occurred most recently. Use *U4-01 [Cumulative OpeTime]* to monitor the actual cumulative operation time. Unit: 1 h	No signal output available
U2-15 (07E0)	SFSFreq@PrevFault	V/f OLV OLV/PM AOLV/PM EZOLV Shows the output frequency after soft start at the fault that occurred most recently. Use *U1-16 [SFS Output Frequency]* to monitor the actual output frequency after soft start. Unit: 0.01 Hz	No signal output available
U2-16 (07E1)	qCurrent@PrevFault	V/f OLV OLV/PM AOLV/PM EZOLV Shows the q-axis current of the motor at the fault that occurred most recently. Use *U6-01 [Iq Sec Current]* to monitor the actual q-Axis current of the motor. Unit: 0.1 %	No signal output available
U2-17 (07E2)	dCurrent@PreFault	V/f OLV OLV/PM AOLV/PM EZOLV Shows the d-axis current of the motor at the fault that occurred most recently. Use *U6-02 [Id ExcCurrent]* to monitor the actual d-Axis current of the motor. Unit: 0.1 %	No signal output available
U2-19 (07E4)	RotorDev@PrevFault	V/f OLV OLV/PM AOLV/PM EZOLV Shows the amount of control axis deviation (Δθ) at the fault that occurred most recently. Use *U6-10 [ContAxisDeviation]* to monitor the actual amount of control axis deviation (Δθ). Unit: 0.1 °	No signal output available
U2-20 (008E)	DrvTemp@PreFault	V/f OLV OLV/PM AOLV/PM EZOLV Shows the heatsink temperature at the fault that occurred most recently. Use *U4-08 [Heatsink Temperature]* to monitor the actual temperature of the heatsink. Unit: 1 °C	No signal output available
U2-21 (1166) Expert	STPoSt@PrevFault	V/f OLV OLV/PM AOLV/PM EZOLV Monitors conditions to detect *STPo [Motor Step-Out Detected]* faults. The bit for each condition is shown as 1 = ON or 0 = OFF. For example, *U2-21* shows 00000001 when the drive detects excessive current. bit0 : Excessive current bit1 : Induced voltage deviation bit2 : d-axis current deviation bit3 : Motor lock at startup bit4 : Acceleration stall continue bit5 : Acceleration stall repeat bit6 : Not used (normal value of [0]). bit7 : Not used (normal value of [0]).	No signal output available

◆ U3: FAULT HISTORY

No. (Hex.)	Name	Description	MFAO Signal Level
U3-01 to U3-04 (0090 - 0093) (0800 - 0803)	1st to 4th Newest Fault	V/f OLV OLV/PM AOLV/PM EZOLV Shows the fault history of the first to fourth most recent faults. **Note:** The drive saves the *U3-01 to U3-04 [1st to 4th Newest Fault]* fault histories to two types of registers at the same time for the Modbus communications.	No signal output available
U3-05 to U3-10 (0804 - 0809)	5th to 10th Newest Fault	V/f OLV OLV/PM AOLV/PM EZOLV Shows the fault history of the fifth to tenth most recent faults.	No signal output available
U3-11 to U3-14 (0094 - 0097) (080A - 080D)	1st to 4th NewstFlt Timing	V/f OLV OLV/PM AOLV/PM EZOLV Shows the cumulative operation time when the first to fourth most recent faults occurred. Unit: 1 h **Note:** The drive saves the *U3-11 to U3-14 [1st to 4th NewstFlt Timing]* the cumulative operation time to two types of registers at the same time for the Modbus communications.	No signal output available
U3-15 to U3-20 (080E - 0813)	1st to 10th NewstFlt Timing	V/f OLV OLV/PM AOLV/PM EZOLV Shows the cumulative operation time when the fifth to tenth most recent faults occurred. Unit: 1 h	No signal output available

◆ U4: MAINTENANCE

No. (Hex.)	Name	Description	MFAO Signal Level
U4-01 (004C)	Cumulative OpeTime	V/f OLV OLV/PM AOLV/PM EZOLV Shows the cumulative operation time of the drive. Use parameter *o4-01 [Cum.Oper TimeSetting]* to reset this monitor. Use parameter *o4-02 [Cum. Oper TimeSelect]* to select the cumulative operation times from: • The time from when the drive is energized until it is de-energized. • The time at which the Run command is turned ON. The maximum value that the monitor will show is *99999*. After this value is more than *99999*, the drive automatically resets it and starts to count from *0* again. Unit: 1 h **Note:** The Modbus communication data is shown in 10 h units. Use register 0099H for data in 1 h units.	10 V: 99999 h
U4-02 (0075)	Num of Run Commands	V/f OLV OLV/PM AOLV/PM EZOLV Shows how many times that the drive has received a Run command. Use parameter *o4-13 [NumOfRunCom Init Counter]* to reset this monitor. The maximum value that the monitor will show is *65535*. After this value is more than *65535*, the drive automatically resets it and starts to count from *0* again. Unit: 1	10 V: 65535 times
U4-03 (0067)	Fan Oper.Time	V/f OLV OLV/PM AOLV/PM EZOLV Shows the cumulative operation time of the cooling fans. Use parameter *o4-03 [Fan.Oper Setting]* to reset this monitor. The maximum value that the monitor will show is *99999*. After this value is more than *99999*, the drive automatically resets it and starts to count from *0* again. Unit: 1 h **Note:** The Modbus communication data is shown in 10 h units. Use register 009BH for data in 1 h units.	10 V: 99999 h
U4-04 (007E)	Cool Fan Maintenance	V/f OLV OLV/PM AOLV/PM EZOLV Shows the cumulative operation time of the cooling fans as a percentage of the replacement life of the cooling fans. Use parameter *o4-03 [Fan.Oper Setting]* to reset this monitor. Unit: 1% **Note:** Replace the cooling fans when this monitor is 90%.	10 V: 100%
U4-05 (007C)	Capacitor Maintenance	V/f OLV OLV/PM AOLV/PM EZOLV Shows the operation time of the electrolytic capacitors for the main circuit and control circuit as a percentage of the replacement life of the electrolytic capacitors. Use parameter *o4-05 [Cap.Maint.Setting]* to reset this monitor. Unit: 1% **Note:** Replace the electrolytic capacitor when this monitor is 90%.	10 V: 100%

No. (Hex.)	Name	Description	MFAO Signal Level
U4-06 (07D6)	SoftChgRelay Maint	V/f OLV OLV/PM AOLV/PM EZOLV Shows the operation time of the soft charge bypass relay as a percentage of the replacement life of the soft charge bypass relay. Use parameter *o4-07 [PreChgRly Preset Maintenance Cnt]* to reset this monitor. Unit: 1% **Note:** Replace the drive when this monitor is 90%.	10 V: 100%
U4-07 (07D7)	IGBT Maintenance	V/f OLV OLV/PM AOLV/PM EZOLV Shows the operation time of the IGBTs as a percentage of the replacement life of the IGBTs. Set parameter *o4-09 [IGBT Preset Maintenance Cnt]* to reset this monitor. Unit: 1% **Note:** Replace the drive when this monitor is 90%.	10 V: 100%
U4-08 (0068)	Heatsink Temperature	V/f OLV OLV/PM AOLV/PM EZOLV Shows the heatsink temperature of the drive. Unit: 1 °C	10 V: 100 °C
U4-09 (005E)	LED Check	V/f OLV OLV/PM AOLV/PM EZOLV Turns on all of the keypad LEDs to make sure that the LEDs operate correctly. 1. With *U4-09* displayed, press . All LEDs on the keypad will turn on. **Note:** When Safety input 2 CH is open (STo), READY will flash.	No signal output available
U4-10 (005C)	kWh Lower 4Digits	V/f OLV OLV/PM AOLV/PM EZOLV Displays the lower 4 digits of the watt hour value for the drive. Unit: 1 kWh **Note:** The watt hour is displayed in 9 digits. Monitor *U4-11 [kWh Upper 5Digits]* shows the upper 5 digits and *U4-10* shows the lower 4 digits. Example for 12345678.9 kWh: *U4-10*: 678.9 kWh *U4-11*: 12345 MWh	No signal output available
U4-11 (005D)	kWh Upper 5Digits	V/f OLV OLV/PM AOLV/PM EZOLV Shows the upper 5 digits of the watt hour value for the drive. Unit: 1 MWh **Note:** Monitor *U4-11* shows the upper 5 digits and *U4-10 [kWh Lower 4Digits]* shows the lower 4 digits. Example for 12345678.9 kWh: *U4-10*: 678.9 kWh *U4-11*: 12345 MWh	No signal output available
U4-13 (07CF)	Peak Hold Current	V/f OLV OLV/PM AOLV/PM EZOLV Shows the hold value of the peak value (rms) for the drive output current. Use *U4-14 [PeakHold OutFreq]* to show the drive output frequency at the time that the drive holds the output current. The drive will hold the peak hold current at the next start up and restart of the power supply. The drive keeps the value that was under hold during baseblock (during stop). The keypad shows the value of *U4-13* in amperes (A). When looking at the monitor through Modbus communications, the current is "8192 = drive rated current (A)". Calculate the current from the monitor value that is in at Modbus communications using "Numerals being displayed / 8192 × drive rated current (A). Unit: When the drive model changes, the display units for this parameter also change. • 0.01 A units: 2001 to 2042, B001 to B018, 4001 to 4023 • 0.1A units: 2056 to 2082, 4031 to 4060	No signal output available
U4-14 (07D0)	PeakHold OutFreq	V/f OLV OLV/PM AOLV/PM EZOLV Displays the output frequency at which the peak value (rms) of the drive output current is held. The peak hold current can be monitored by *U4-13 [Peak Hold Current]*. The peak hold output frequency will be cleared at the next startup and restart of the power supply. The drive keeps the value that was under hold during baseblock (during stop). Unit: 0.01 Hz	No signal output available
U4-16 (07D8)	MotorOLEstimate (oL1)	V/f OLV OLV/PM AOLV/PM EZOLV Shows the integrated value of *oL1 [Motor Overload]* as a percentage of *oL1* detection level. Unit: 0.1%	10 V: 100%

No. (Hex.)	Name	Description	MFAO Signal Level
U4-18 (07DA)	FRef Source Selected	V/f OLV **OLV/PM** AOLV/PM EZOLV Shows the selected frequency reference source. The keypad shows the frequency reference source as "XY-nn" as specified by these rules: X: *Ext Ref 1/2 [H1-xx = 9]* selection status • 1: *b1-01 [Freq. Ref. Sel. 1]* • 2: *b1-15 [Freq. Ref. Sel. 2]* Y-nn: Frequency reference source • 0-01: Keypad (*d1-01 [Reference 1]*) • 1-00: Analog input (unassigned) • 1-01: MFAI terminal AI1 • 1-02: MFAI terminal AI2 • 2-02 to 2-17: Multi-step speed reference (*d1-02 to d1-17 [Reference 2 to Reference 16, Jog Reference]*) • 3-01: Modbus communications • 4-01: Communication option card • 5-01: Pulse train input • 7-01: Q2pack • 9-01: Up/Down command	No signal output available
U4-19 (07DB)	Mbus FreqReference Value	V/f OLV **OLV/PM** AOLV/PM EZOLV Shows the frequency reference sent to the drive from the Modbus communications as a decimal. Unit: 0.01%	10 V = Maximum frequency (-10 V to +10 V)
U4-20 (07DC)	Option FreqReference Value	V/f OLV **OLV/PM** AOLV/PM EZOLV Shows the frequency reference sent to the drive from the communication option as a decimal.	10 V = Maximum frequency (-10 V to +10 V)
U4-21 (07DD)	Run Source Selected	V/f OLV **OLV/PM** AOLV/PM EZOLV Shows the selected Run command source. The keypad shows the Run command source as "XY-nn" as specified by these rules: X: *Ext Ref 1/2 [H1-xx = 9]* selection status • 1: *b1-02 [Run Comm. Sel 1]* • 2: *b1-16 [Run Comm. Sel 2]* Y: Run command source • 0: Keypad • 1: Control circuit terminal • 3: Modbus communications • 4: Communication option card • 7: Q2pack nn: Run command limit status data • 00: No limit status. • 01: The Run command was left ON when the drive stopped in the Programming Mode. • 02: The Run command was left ON when switching from LOCAL Mode to REMOTE Mode. • 03: The Run command is in standby after the drive was energized until the soft charge bypass contactor turns ON. **Note:** The drive will detect *Uv1 [DC Bus Undervoltage]* or *Uv [Undervoltage]* if the soft charge bypass contactor does not turn ON after 10 s. • 04: Restart after run stop is prohibited. • 05: Fast stop has been executed using the MFDI terminal. Or, the motor has ramped to stop by pressing the STOP key on the keypad. • 06: *b1-17 = 1 [RUN@PowerUp Selection = Disregard RUN]* is set. • 07: During baseblock while coast to stop with timer. • 08: Frequency reference is below *E1-09 [Min Output Frequency]* during baseblock. • 09: Waiting for the Enter command from PLC.	No signal output The keypad shows the Run command source as "XY-nn" as specified by these rules: available

No. (Hex.)	Name	Description	MFAO Signal Level
U4-22 (07DE)	Mbus CmdWord Value	V/f OLV OLV/PM AOLV/PM EZOLV Shows the operation signal (register 0001H) sent to the drive from Modbus communications as a 4-digit hexadecimal number (zero suppress). The keypad shows the operation signal as specified by these rules: bit 0 : Forward run/Stop bit 1 : Reverse run/Stop bit 2 : External fault bit 3 : Fault Reset Procedure bit 4 : Multi-function input 1 bit 5 : Multi-function input 2 bit 6 : Multi-function input 3 bit 7 : Multi-function input 4 bit 8 : Multi-function input 5 bit 9 : Multi-function input 6 bit A : Multi-function input 7 bit B : Not used (normal value of 0). bit C : Not used (normal value of 0). bit D : Not used (normal value of 0). bit E : Not used (normal value of 0). bit F : Not used (normal value of 0).	No signal output available
U4-23 (07DF)	Option CmdWord Value	V/f OLV OLV/PM AOLV/PM EZOLV Shows the operation signal (register 0001H) sent to the drive from Modbus communications as a 4-digit hexadecimal number. The keypad shows the operation signal as specified by these rules: bit 0 : Forward run/Stop bit 1 : Reverse run/Stop bit 2 : External fault bit 3 : Fault Reset Procedure bit 4 : Multi-function input 1 bit 5 : Multi-function input 2 bit 6 : Multi-function input 3 bit 7 : Multi-function input 4 bit 8 : Multi-function input 5 bit 9 : Multi-function input 6 bit A : Multi-function input 7 bit B : Not used (normal value of 0). bit C : Not used (normal value of 0). bit D : Not used (normal value of 0). bit E : Not used (normal value of 0). bit F : Not used (normal value of 0).	No signal output available
U4-24 (07E6)	No of Travels(L)	V/f OLV OLV/PM AOLV/PM EZOLV Shows the lower 4 digits of the drive run count. **Note:** The drive run count appears as an 8-digit number. Monitor *U4-25 [No of Travels(H)]* shows the upper 4 digits and *U4-24* shows the lower 4 digits.	No signal output available
U4-25 (07E7)	No of Travels(H)	V/f OLV OLV/PM AOLV/PM EZOLV Shows the lower 4 digits of the drive run count. **Note:** The drive run count appears as an 8-digit number. Monitor *U4-25* shows the upper 4 digits and *U4-24 [No of Travels(L)]* shows the lower 4 digits.	No signal output available
U4-52 (1592)	Torque Ref from Comm	V/f OLV OLV/PM AOLV/PM EZOLV Displays the torque reference given to the drive via a serial communication option card or via Modbus communications as a decimal number. Unit: 0.1%	10 V = 100% (-10 V to +10 V)

◆ U5: PID

No. (Hex.)	Name	Description	MFAO Signal Level
U5-01 (0057)	PID Feedback	V/f OLV OLV/PM AOLV/PM EZOLV Shows the PID control feedback value. Parameter *b5-20 [PID Unit Selection]* sets the display units. Unit: 0.01%	10 V = Maximum frequency (-10 V to +10 V)
U5-02 (0063)	PID Input	V/f OLV OLV/PM AOLV/PM EZOLV Shows the change between the PID setpoint and PID feedback (the quantity of PID input) as a percentage of the maximum output frequency. Unit: 0.01%	10 V = Maximum frequency (-10 V to +10 V)

No. (Hex.)	Name	Description	MFAO Signal Level
U5-03 (0064)	PID Output	V/f OLV OLV/PM AOLV/PM EZOLV Shows the PID control output as a percentage of the maximum output frequency. Unit: 0.01%	10 V = Maximum frequency (-10 V to +10 V)
U5-04 (0065)	PID Setpoint	V/f OLV OLV/PM AOLV/PM EZOLV Shows the PID setpoint. Parameter *b5-20 [PID Unit Selection]* sets the display units. Unit: 0.01%	10 V = Maximum frequency (-10 V to +10 V)
U5-05 (07D2)	PID Diff.Feedbk	V/f OLV OLV/PM AOLV/PM EZOLV Shows the PID differential feedback value as a percentage of the maximum output frequency. This monitor is available after you set *H3-02 or H3-10 = 11 [AI1 Function Selection or AI2 Function Selection = Diff PIDFbk]*. Unit: 0.01%	10 V: Maximum frequency (-10 V to +10 V)
U5-06 (07D3)	PID AdjustFeedback	V/f OLV OLV/PM AOLV/PM EZOLV Shows the difference from calculating *U5-05 - U5-01 [PID Diff.Feedbk] - [PID Feedback]*. Unit: 0.01% **Note:** *U5-01 [PID Feedback] = U5-06* when *H3-02 or H3-10 ≠ 11 [AI1 Function Selection or AI2 Function Selection ≠ Diff PIDFbk]*.	10 V: Maximum frequency (-10 V to +10 V)
U5-21 (0872) Expert	Energy Save Ki Coeff	V/f OLV OLV/PM AOLV/PM EZOLV Shows the energy-saving coefficient Ki value for PM. Unit: 0.01	No signal output available
U5-22 (0873) Expert	Energy Save Kt Coeff	V/f OLV OLV/PM AOLV/PM EZOLV Shows the energy-saving coefficient Kt value for PM. Unit: 0.01	No signal output available
U5-99 (1599)	PID Setpoint Command	V/f OLV OLV/PM AOLV/PM EZOLV Shows the PID setpoint command. Parameter *b5-20 [PID Unit Selection]* sets the display units. Unit: 0.01%	10 V = Maximum frequency (-10 V to +10 V)

◆ U6: ADVANCED

No. (Hex.)	Name	Description	MFAO Signal Level
U6-01 (0051)	Iq Sec Current	V/f OLV OLV/PM AOLV/PM EZOLV Shows the value calculated for the motor secondary current (q axis) as a percentage of the motor rated secondary current. Unit: 0.1%	10 V = Motor secondary rated current (-10 V to +10 V)
U6-02 (0052)	Id ExcCurrent	V/f OLV OLV/PM AOLV/PM EZOLV Shows the value calculated for the motor excitation current (d axis) as a percentage of the motor rated secondary current. Unit: 0.1%	10 V = Motor secondary rated current (-10 V to +10 V)
U6-03 (0054)	ASR Input	V/f OLV OLV/PM AOLV/PM EZOLV Shows the ASR input value as a percentage of the maximum frequency. Unit: 0.01%	10 V = Maximum frequency (-10 V to +10 V)
U6-04 (0055)	ASR Output	V/f OLV OLV/PM AOLV/PM EZOLV Shows the ASR output value as a percentage of the motor rated secondary current. Unit: 0.01%	10 V = Motor secondary rated current (-10 V to +10 V)
U6-05 (0059)	Vq OutputVoltRef	V/f OLV OLV/PM AOLV/PM EZOLV Shows the drive internal voltage reference for motor secondary current control (q axis). Unit: 0.1 V	200 V class: 10 V = 200 Vrms 400 V class: 10 V = 400 Vrms (-10 V to +10 V)
U6-06 (005A)	Vd OutputVoltRef	V/f OLV OLV/PM AOLV/PM EZOLV Shows the drive internal voltage reference for motor excitation current control (d axis). Unit: 0.1 V	200 V class: 10 V = 200 Vrms 400 V class: 10 V = 400 Vrms (-10 V to +10 V)
U6-07 (005F) Expert	q-Axis ACR Output	V/f OLV OLV/PM AOLV/PM EZOLV Shows the output value for current control related to motor secondary current (q axis). Unit: 0.1%	200 V class: 10 V = 200 Vrms 400 V class: 10 V = 400 Vrms (-10 V to +10 V)
U6-08 (0060) Expert	d-Axis ACR Output	V/f OLV OLV/PM AOLV/PM EZOLV Shows the output value for current control related to motor excitation current (d axis). Unit: 0.1%	200 V class: 10 V = 200 Vrms 400 V class: 10 V = 400 Vrms (-10 V to +10 V)

No. (Hex.)	Name	Description	MFAO Signal Level
U6-09 (07C0) Expert	AdvPhase Compen	V/f OLV OLV/PM AOLV/PM EZOLV Displays the data on forward phase compensation for the calculation results of the amount of control axis deviation. Unit: 1 °	10 V: 180 ° (-10 V to +10 V)
U6-10 (07C1) Expert	ContAxisDeviation	V/f OLV OLV/PM AOLV/PM EZOLV Shows the deviation between the γδ-Axis used for motor control and the dq-Axis. Unit: 0.1 °	10 V: 180 ° (-10 V to +10 V)
U6-14 (07CB) Expert	MagPolePos (Obs)	V/f OLV OLV/PM AOLV/PM EZOLV Shows the value of the flux position estimation. Unit: 0.1 °	10 V: 180 ° (-10 V to +10 V)
U6-17 (07D1) Expert	Energy Save Coeff	V/f OLV OLV/PM AOLV/PM EZOLV Shows the total time of direction of motor rotation detections for Speed Estimation Speed Searches. This value adjusts *b3-26 [Dir. Determ. Level]*. **Note:** Upper limit is +32767 and lower limit is -32767.	No signal output available
U6-20 (07D4)	FRef Bias (UpDw2)	V/f OLV OLV/PM AOLV/PM EZOLV Shows the bias value used to adjust the frequency reference. Unit: 0.1%	10 V: Maximum Frequency
U6-21 (07D5)	Offset Frequency	V/f OLV OLV/PM AOLV/PM EZOLV Shows the total value of *d7-01 to d7-03 [Offset Frq 1 to Offset Frq 3]* selected with *Offset Frq 1 to Offset Frq 3[H1-xx = F to 10]*. Unit: 0.1%	10 V: Maximum Frequency
U6-31 (007B)	Trq Detect Monitor	V/f OLV OLV/PM AOLV/PM EZOLV Monitors the torque reference or the output current after applying the filter set to *L6-07 [Trq Detect Filter Time]*. Unit: 0.1%	10 V:100%
U6-36 (0720) Expert	Comm Err n-IO	V/f OLV OLV/PM AOLV/PM EZOLV Shows the number of inter-CPU communication errors. De-energizing the drive sets this number to 0.	No signal output available
U6-37 (0721) Expert	Comm Err n-PWM	V/f OLV OLV/PM AOLV/PM EZOLV Shows the number of inter-CPU communication errors. De-energizing the drive sets this number to 0.	No signal output available
U6-57 (07C4)	PoleDis IdDifVal	V/f OLV OLV/PM AOLV/PM EZOLV Shows the change from the integrated current when finding the polarity. Unit: 1 **Note:** If the change from the integrated current is less than 819, increase *n8-84 [Polarity Det Current]*. *U6-57 = 8192* is equivalent to the motor rated current.	No signal output available
U6-80 to U6-83 (07B0 - 07B3)	OPT IP ADR1 to 4	V/f OLV OLV/PM AOLV/PM EZOLV Shows the currently available local IP Address. • *U6-80*: 1st octet • *U6-81*: 2nd octet • *U6-82*: 3rd octet • *U6-83*: 4th octet	No signal output available
U6-84 to U6-87 (07B4 - 07B7)	Online Subnet 1 to 4	V/f OLV OLV/PM AOLV/PM EZOLV Shows the currently available subnet mask. • *U6-84*: 1st octet • *U6-85*: 2nd octet • *U6-86*: 3rd octet • *U6-87*: 4th octet	No signal output available
U6-88 to U6-91 (07B8, 07B9, 07F0, 07F1)	Online Gateway 1 to 4	V/f OLV OLV/PM AOLV/PM EZOLV Shows the currently available gateway address. • *U6-88*: 1st octet • *U6-89*: 2nd octet • *U6-90*: 3rd octet • *U6-91*: 4th octet	No signal output available
U6-92 (07F2)	Online Speed	V/f OLV OLV/PM AOLV/PM EZOLV Shows the currently available communications speed. 10: 10 Mbps 100: 100 Mbps	No signal output available
U6-93 (07F3)	Online Duplex	V/f OLV OLV/PM AOLV/PM EZOLV Shows the currently available Duplex setting.	No signal output available

No. (Hex.)	Name	Description	MFAO Signal Level
U6-98 (07F8)	First Fault	V/f OLV OLV/PM AOLV/PM EZOLV Shows the contents of the most recent communication options fault (DeviceNet, Modbus TCP/IP, EtherNet/IP).	No signal output available
U6-99 (07F9)	Current Fault	V/f OLV OLV/PM AOLV/PM EZOLV Shows the contents of current fault from communication options (DeviceNet, Modbus TCP/IP, EtherNet/IP).	No signal output available

◆ U8: Q2PACK MONITORS

No. (Hex.)	Name	Description	MFAO Signal Level
U8-01 to U8-10 (1950 - 1959)	Q2pack Mon 1 to 10	V/f OLV OLV/PM AOLV/PM EZOLV Shows Q2pack Monitors 1 to 10. Unit: 0.01%	10 V = 100%
U8-11 to U8-13 (195A - 195C)	Q2pack Ver 1 to 3	V/f OLV OLV/PM AOLV/PM EZOLV When you open the setting screen by clicking the setting button on the PC tool title bar, the user ID can be confirmed with the ID display of the primary user. U8-11 displays the upper, U8-12 the lower three digits of the user ID. U8-13 displays the software ID.	No signal output available
U8-18 (1961)	Q2pack Base Platform	V/f OLV OLV/PM AOLV/PM EZOLV Shows the Q2pack platform version.	No signal output available
U8-21 to U8-25 (1964 - 1968)	Q2pack Mon 21 to 25	V/f OLV OLV/PM AOLV/PM EZOLV Shows Q2pack Monitors 21 to 25. Unit: 0.01%	10 V = 100%
U8-31 to U8-40 (196E - 1977)	Q2pack Mon 31 to 40	V/f OLV OLV/PM AOLV/PM EZOLV Shows Q2pack Monitors 31 to 40. Unit: 0.01%	10 V = 100%
U8-51 to U8-55 (1982 - 1986)	Q2pack Mon 51 to 55	V/f OLV OLV/PM AOLV/PM EZOLV Shows Q2pack Monitors 51 to 55. Unit: 0.01%	10 V = 100%

11.17 Parameters that Change from the Default Settings with A1-02 [Control Method]

The values for the parameters in these tables depend on the values for parameter *A1-02*. When you change the setting for *A1-02*, the default settings will change.

Table 11.1 A1-02 = 0, 2 [V/f Control, OLVector]

No.	Name	Range	Unit	Control Method (A1-02 Setting)	
				V/f (0)	OLV (2)
b2-01	ZSpd/DCI Threshold	0.0 - 10.0	0.1 Hz	0.5	0.5
b2-04	DCInj Time@Stop	0.00 - 10.00	0.01 s	0.50	0.50
b3-01	SpSrch@Start Selection	0 - 1	1	0	0
b3-02	SpSrch Deactivation Current	0 - 200	1%	120	100
b3-08	Speed ACR PGain for Estimation	0.00 - 6.00	0.01	0.50 *1	0.50 *1
b3-09	Speed ACR ITime for Estimation	0.0 - 1000.0	0.1 ms	2.0	2.0
b3-14	Speed Bi-Directional Search	0 - 1	1	0	0
b5-15	Sleep Start Level	0.0 - 400.0	0.1 Hz	0.0	0.0
b6-01	Dwell Ref.@Start	0.0 - 400.0	0.1 Hz	0.0	0.0
b6-03	Dwell Ref@Stop	0.0 - 400.0	0.1 Hz	0.0	0.0
b8-02	eSave Ctrl Gain	0.0 - 10.0	0.1	-	0.7
b8-03	eSave Filter Time	0.00 - 10.00	0.01 s	-	0.50
b8-19	eSave Search Frequency	10 - 300	1 Hz	100	100
C1-11	Ac/Dec Switch Frequency	0.0 - 400.0	0.1 Hz	0.0	0.0
C2-01	Jerk@Start of Accel	0.00 - 10.00	0.01 s	0.20	0.20
C3-01	Slip Comp Gain	0.0 - 2.5	0.1	0.0	1.0
C3-02	Slip Comp Delay Time	0 - 10000	1 ms	2000	200
C4-01	Trq Comp Gain	0.00 - 2.50	0.01	1.00	1.00
C4-02	Trq Comp Delay Time	0 - 10000	1 ms	200	20
C5-01	ASR PGain 1	0.00 - 300.00	0.01	-	-
C5-02	ASR ITime 1	0.000 - 60.000	0.001 s	-	-
C5-03	ASR PGain 2	0.00 - 300.00	0.01	-	-
C5-04	AASR ITime 2	0.000 - 10.000	0.001 s	-	-
C5-06	ASR Delay Time	0.000 - 0.500	0.001 s	-	-
C5-07	ASR Gain Switch Frequency	0.0 - 400.0	0.1 Hz	0.0Hz	0.0Hz
C6-02	Carrier Frequency Selection	1 - F	1	1 *2	1 *2
d3-01	Jump Frequency 1	0.0 - 400.0	0.1 Hz	0.0	0.0
d3-02	Jump Frequency 2	0.0 - 400.0	0.1 Hz	0.0	0.0
d3-03	Jump Frequency 3	0.0 - 400.0	0.1 Hz	0.0	0.0
d3-04	Jump Frequency Width	0.0 - 20.0	0.1 Hz	1.0	1.0
E1-04	Max Output Frequency	40.0 - 400.0 *2 *3	0.1 Hz	60.0 *4	60.0
E1-05	Max Output Voltage	0.0 - 255.0 *5	0.1 V	200.0 *4	200.0
E1-06	Base Frequency	0.0 - 400.0 *3	0.1 Hz	60.0 *4	60.0
E1-07	Mid A Frequency	0.0 - 400.0 *3	0.1 Hz	3.0 *4	3.0
E1-08	Mid A Voltage	0.0 - 255.0 *5	0.1 V	15.0 *4	11.0
E1-09	Min Output Frequency	0.0 - 400.0 *3	0.1 Hz	1.5 *4	0.5

No.	Name	Range	Unit	Control Method (A1-02 Setting)	
				V/f (0)	OLV (2)
E1-10	Min Output Voltage	0.0 - 255.0 *5	0.1 V	9.0 *4	2.0
F1-09	Overspeed Delay Time	0.0 - 2.0	0.1 s	-	-
L1-01	Motor Cool Type for OL1 Calc	0 - 4	1	1	1
L2-31	KEB StartV Offset Level	0 - 100 *5	1 V	0	0
L3-05	StallP@RUN Enable	0 - 3	1	1	1
L3-20	DCBus VoltAdj Gain	0.00 - 5.00	0.01	1.00	0.30
L3-21	OVSup Acc/Dec Gain	0.10 - 10.00	0.01	1.00	1.00
L3-36	VibSup Gain@Accel	0.0 - 100.0	0.1	10.0	20.0
L4-01	SpAgree Det.Level	0.0 - 400.0 *6	0.1	0.0 Hz	0.0 Hz
L4-02	SpAgree Det.Width	0.0 - 20.0	0.1	2.0 Hz	2.0 Hz
L4-03	SpAgree Det.Level(+/-)	-400.0 - +400.0 *7	0.1	0.0 Hz	0.0 Hz
L4-04	SpAgree Det.Width(+/-)	0.0 - 20.0	0.1	2.0 Hz	2.0 Hz
L8-40	Carrier Red Off-Delay Time	0.00 - 2.00	0.01 s	0.50	0.50
L8-90	STPo Detect Level	0 - 5000	1	-	-
n5-04	Speed Response Frequency	0.00 - 500.00	0.00 Hz	-	-
n8-35	InitRotorPos Selection	0 - 2	1	-	-
n8-51	Ac/Dec Pull-In Current	0 - 200%	1	0	0
o1-03	FrqDisplay Unit Selection	0 - 3	1	0	0
o1-04	V/f Pattern Unit for Display	0 - 1	1	-	-

*1 The default setting changes when the setting for *o2-04 [Drive KVA Selection]* changes.
*2 The default setting changes when the setting of *C6-01 [ND/HD Duty Selection]* changes.
*3 The setting range changes when the setting of *E5-01 [PM Mot Code Selection]* changes when *A1-02 = 5 [PM OLVector]*.
*4 The default setting changes when the drive model and *E1-03 [V/f Pattern Selection]* change.
*5 This is the value for 200 V class drives. Double the value for 400 V class drives.
*6 When *A1-02 = 5 [PM OLVector]*, the maximum value of the setting range is 100.0.
*7 When *A1-02 = 5 [PM OLVector]*, the setting range is -100.0 to +100.0.

Table 11.2 A1-02 = 5, 6, 8 [PM OLVector, PM AOLVector, EZ Vector]

No.	Name	Range	Unit	Control Method (A1-02 Setting)		
				OLV/PM (5)	AOLV/PM (6)	EZOLV (8)
b2-01	ZSpd/DCI Threshold	0.0 - 10.0	0.1	0.5 Hz	1.0%	0.5Hz
b2-04	DCInj Time@Stop	0.00 - 10.00	0.01 s	0.00	0.00	0.00
b3-01	SpSrch@Start Selection	0 - 1	1	0	0	0
b3-02	SpSrch Deactivation Current	0 - 200	1%	-	-	-
b3-08	Speed ACR PGain for Estimation	0.00 - 6.00	0.01	0.30	0.30	0.30
b3-09	Speed ACR ITime for Estimation	0.0 - 1000.0	0.1 ms	4.0	4.0	4.0
b3-14	Speed Bi-Directional Search	0 - 1	1	-	-	0
b5-15	Sleep Start Level	0.0 - 400.0 *1	0.1	0.0 Hz	0.0%	0.0%
b6-01	Dwell Ref.@Start	0.0 - 400.0 *1	0.1	0.0 Hz	0.0%	0.0%
b6-03	Dwell Ref@Stop	0.0 - 400.0 *1	0.1	0.0 Hz	0.0%	0.0%
b8-02	eSave Ctrl Gain	0.0 - 10.0	0.1	-	-	-
b8-03	eSave Filter Time	0.00 - 10.00	0.01 s	-	-	-
b8-19	eSave Search Frequency	10 - 300	1 Hz	100	100	20
C1-11	Ac/Dec Switch Frequency	0.0 - 400.0 *1	0.1	0.0 Hz	0.0%	0.0%

No.	Name	Range	Unit	Control Method (A1-02 Setting)		
				OLV/PM (5)	AOLV/PM (6)	EZOLV (8)
C2-01	Jerk@Start of Accel	0.00 - 10.00	0.01 s	1.00	0.20	1.00
C3-01	Slip Comp Gain	0.0 - 2.5	0.1	-	-	0
C3-02	Slip Comp Delay Time	0 - 10000	1 ms	-	-	200
C4-01	Trq Comp Gain	0.00 - 2.50	0.01	0.00	-	0.00
C4-02	Trq Comp Delay Time	0 - 10000	1 ms	100	-	100
C5-01	ASR PGain 1	0.00 - 300.00	0.01	10.00	10.00	10.00
C5-02	ASR ITime 1	0.000 - 60.000	0.001 s	0.500	0.500	0.500
C5-03	ASR PGain 2	0.00 - 300.00	0.01	-	10.00	10.00
C5-04	AASR ITime 2	0.000 - 10.000	0.001 s	-	0.500	0.500
C5-06	ASR Delay Time	0.000 - 0.500	0.001 s	-	0.016	0.004
C5-07	ASR Gain Switch Frequency	0.0 - 400.0 *1	0.1	0.0Hz	0.0%	0.0%
C6-02	Carrier Frequency Selection	1 - F	1	2	2	2
d3-01	Jump Frequency 1	0.0 - 400.0 *1	0.1	0.0 Hz	0.0%	0.0%
d3-02	Jump Frequency 2	0.0 - 400.0 *1	0.1	0.0 Hz	0.0%	0.0%
d3-03	Jump Frequency 3	0.0 - 400.0 *1	0.1	0.0 Hz	0.0 %	0.0 %
d3-04	Jump Frequency Width	0.0 - 20.0 *2	0.1	1.0 Hz	1.0 %	1.0 %
E1-04	Max Output Frequency	40.0 - 400.0 *3	0.1 Hz	Determined by E5-01	Determined by E5-01	Determined by E5-01
E1-05	Max Output Voltage	0.0 - 255.0 *4	0.1 V	Determined by E5-01	Determined by E5-01	Determined by E5-01
E1-06	Base Frequency	0.0 - 400.0	0.1 Hz	Determined by E5-01	Determined by E5-01	Determined by E5-01
E1-07	Mid A Frequency	0.0 - 400.0	0.1 Hz	-	-	-
E1-08	Mid A Voltage	0.0 - 255.0 *4	0.1 V	-	-	-
E1-09	Min Output Frequency	0.0 - 400.0	0.1 Hz	Determined by E5-01	Determined by E5-01	Determined by E5-01
E1-10	Min Output Voltage	0.0 - 255.0 *4	0.1 V	-	-	-
F1-09	Overspeed Delay Time	0.0 - 2.0	0.1 s	-	0.0	-
L1-01	Motor Cool Type for OL1 Calc	0 - 4	1	4	4	Determined by E9-01
L2-31	KEB StartV Offset Level	0 - 100 *4	1 V	50	50	50
L3-05	StallP@RUN Enable	0 - 3	1	1	-	3
L3-20	DCBus VoltAdj Gain	0.00 - 5.00	0.01	0.65	0.65	0.65
L3-21	OVSup Acc/Dec Gain	0.10 - 10.00	0.01	1.00	1.00	1.00
L3-36	VibSup Gain@Accel	0.0 - 100.0	0.1	-	-	-
L4-01	SpAgree Det.Level	0.0 - 400.0 *1	0.1	0.0 Hz	0.0%	0.0%
L4-02	SpAgree Det.Width	0.0 - 20.0 *2	0.1	2.0 Hz	4.0%	4.0%
L4-03	SpAgree Det.Level(+/-)	-400.0 - +400.0 *5	0.1	0.0 Hz	0.0%	0.0%
L4-04	SpAgree Det.Width(+/-)	0.0 - 20.0 *2	0.1	2.0 Hz	4.0%	4.0%
L8-40	Carrier Red Off-Delay Time	0.00 - 2.00	0.01 s	0.00	0.00	0.00
L8-90	STPo Detect Level	0 - 5000	1	0	80	-
n5-04	Speed Response Frequency	0.00 - 500.00	0.00 Hz	-	20.00	-
n8-35	InitRotorPos Selection	0 - 2	1	0	1	-
n8-51	Ac/Dec Pull-In Current	0 - 200%	1	50%	0	80%
o1-03	FrqDisplay Unit Selection	0 - 3	1	0	1	1
o1-04	V/f Pattern Unit for Display	0 - 1	1	-	1	-

*1 The setting range is 0.0 to 100.0 when *A1-02 = 6 [PM AOLVector]*.
*2 The setting range is 0.0 to 40.0 when *A1-02 = 6 [PM AOLVector]*.

*3 The default setting changes when the setting for *C6-01 [ND/HD Duty Selection]* changes.
*4 This is the value for 200 V class drives. Double the value for 400 V class drives.
*5 The setting range is -100.0 to +100.0 when *A1-02 = 6 [PM AOLVector]*.

11.18 Parameters that Change from the Default Settings with E3-01 [M2 Control Method Selection]

The values for the parameters in these tables depend on the values for parameter *E3-01*. When you change the setting for *E3-01*, the default settings will change.

No.	Name	Range	Unit	Motor 2 Control Method (setting value of E3-01)	
				V/f (0)	OLV (2)
C3-21	M2 Slip Comp Gain	0.0 - 2.50	0.1	0.0	1.0
C3-22	M2 Slip Comp DelayTime	0 - 10000	1 ms	2000	200
E3-04	M2 Max Out Frequency	40.0 - 590.0	0.1 Hz	60.0	60.0
E3-05	M2 Max Out Voltage	0.0 - 255.0 *1	0.1 V	200.0	200.0
E3-06	M2 Base Frequency	0.0 - 590.0	0.1 Hz	60.0	60.0
E3-07	M2 Mid A Frequency	0.0 - 590.0	0.1 Hz	3.0	3.0
E3-08	M2 Mid A Voltage	0.0 - 255.0 *1	0.1 V	15.0	11.0
E3-09	M2 Min Out Frequency	0.0 - 590.0	0.1 Hz	1.5	0.5
E3-10	M2 Min Out Voltage	0.0 - 255.0 *1	0.1 V	9.0	2.0
E3-11	M2 Mid B Frequency	0.0 - 590.0	Determined by o1-04	0.0	0.0
E3-12	M2 Min Out Voltage	0.0 - 255.0 *1	0.1 V	0.0	0.0
E3-13	M2 Base Voltage	0.0 - 255.0 *1	0.1 V	0.0	0.0

*1 This is the value for 200 V class drives. Double the value for 400 V class drives.

11.19 Parameters Changed by E1-03 [V/f Pattern Selection]

The values for parameters *A1-02 [Control Method]* and *E1-03 [V/f Pattern Selection]* change the default settings for the parameters in these tables.

Table 11.3 Parameters Changed by E1-03 (2001 to 2021, B001 to B018, and 4001 to 4012)

No.	Unit	Setting Value																Control Method (A1-02 Setting)		
E1-03		0	1	2	3	4	5	6	7	8	9	A	B	C	D	E	F *1	OLV (2)	OLV/PM (5)	AOL V/PM (6)
E1-04	Hz	50.0	60.0	60.0	72.0	50.0	50.0	60.0	60.0	50.0	50.0	60.0	60.0	90.0	120.0	180.0	50.0	50.0	*2	*2
E1-05 *3	V	200.0	200.0	200.0	200.0	200.0	200.0	200.0	200.0	200.0	200.0	200.0	200.0	200.0	200.0	200.0	200.0	200.0	*2	*2
E1-06	Hz	50.0	60.0	50.0	60.0	50.0	50.0	60.0	60.0	50.0	50.0	60.0	60.0	60.0	60.0	60.0	50.0	50.0	*2	*2
E1-07	Hz	2.5	3.0	3.0	3.0	25.0	25.0	30.0	30.0	2.5	2.5	3.0	3.0	3.0	3.0	3.0	2.5	3.0	-	-
E1-08 *3	V	16.0	16.0	16.0	16.0	35.0	50.0	35.0	50.0	19.0	24.0	19.0	24.0	16.0	16.0	16.0	16.0	14.4	-	-
E1-09	Hz	1.3	1.5	1.5	1.5	1.3	1.3	1.5	1.5	1.3	1.3	1.5	1.5	1.5	1.5	1.5	1.3	0.5	*2	*2
E1-10 *3	V	12.0	12.0	12.0	12.0	8.0	9.0	8.0	9.0	12.0	13.0	12.0	15.0	12.0	12.0	12.0	12.0	3.0	-	-

*1 These values are the default settings for *E1-04 to E1-10* and *E3-04 to E3-10 [V/f Pattern for Motor 2]*. These settings are the same as those for the V/f pattern when *E1-03 = 0 [CT_50-50Hzmax]*.
*2 The default setting varies depending on the setting of *E5-01 [PM Mot Code Selection]*.
*3 This is the value for 200 V class drives. Double the value for 400 V class drives.

Table 11.4 Parameters Changed by E1-03 (2030 to 2082 and 4018 to 4060)

No.	Unit	Setting Value																Control Method (A1-02 Setting)		
E1-03		0	1	2	3	4	5	6	7	8	9	A	B	C	D	E	F *1	OLV (2)	OLV/PM (5)	AOL V/PM (6)
E1-04	Hz	50.0	60.0	60.0	72.0	50.0	50.0	60.0	60.0	50.0	50.0	60.0	60.0	90.0	120.0	180.0	50.0	50.0	*2	*2
E1-05 *3	V	200.0	200.0	200.0	200.0	200.0	200.0	200.0	200.0	200.0	200.0	200.0	200.0	200.0	200.0	200.0	200.0	200.0	*2	*2
E1-06	Hz	50.0	60.0	50.0	60.0	50.0	50.0	60.0	60.0	50.0	50.0	60.0	60.0	60.0	60.0	60.0	50.0	50.0	*2	*2
E1-07	Hz	2.5	3.0	3.0	3.0	25.0	25.0	30.0	30.0	2.5	2.5	3.0	3.0	3.0	3.0	3.0	2.5	3.0	-	-
E1-08 *3	V	14.0	14.0	14.0	14.0	35.0	50.0	35.0	50.0	18.0	23.0	18.0	23.0	14.0	14.0	14.0	14.0	13.2	-	-
E1-09	Hz	1.3	1.5	1.5	1.5	1.3	1.3	1.5	1.5	1.3	1.3	1.5	1.5	1.5	1.5	1.5	1.3	0.5	*2	*2
E1-10 *3	V	7.0	7.0	7.0	7.0	6.0	7.0	6.0	7.0	9.0	11.0	9.0	13.0	7.0	7.0	7.0	7.0	2.4	-	-

*1 These values are the default settings for *E1-04 to E1-10* and *E3-04 to E3-10 [V/f Pattern for Motor 2]*. These settings are the same as those for the V/f pattern when *E1-03 = 0 [CT_50-50Hzmax]*.
*2 The default setting varies depending on the setting of *E5-01 [PM Mot Code Selection]*.
*3 This is the value for 200 V class drives. Double the value for 400 V class drives.

11.20 Defaults by Drive Model and Duty Rating ND/HD

The values for the parameters in these tables depend on the values for parameters *o2-04* and *C6-01*. Changing the settings for *o2-04* and *C6-01* will change the default settings.

◆ Three-Phase 200 V Class

No. *1	Name	Unit	Default							
-	Drive Model	-	2001		2002		2004		2006	
C6-01	ND/HD Duty Selection	-	HD	ND	HD	ND	HD	ND	HD	ND
			0	1	0	1	0	1	0	1
o2-04	Drive KVA Selection	Hex.	60		61		62		63	
E2-11 (E4-11, E5-02)	Motor Rated Power (kW)	kW	0.1	0.2	0.2	0.4	0.4	0.75	0.75	1.1
b3-04	SpSrch V/F Gain	%	100	100	100	100	100	100	100	100
b3-06	Speed Curr Lev1 for Estimation	-	1	1	1	1	1	1	0.5	0.5
b3-08	Speed ACR PGain for Estimation	-	0.5	0.5	0.5	0.5	0.5	0.5	0.5	0.5
b3-26	Dir. Determ. Level	-	1000	1000	1000	1000	1000	1000	1000	1000
b8-03	eSave Filter Time	s	0.5	0.5	0.5	0.5	0.5	0.5	0.5	0.5
b8-04	eSave Coef. Value	-	481.7	356.9	356.9	288.2	288.2	223.7	223.7	196.6
C6-02	Carrier Frequency Selection	-	4	7	4	7	4	7	4	7
E2-01 (E4-01)	Mot Rated Current (FLA)	A	0.6	1.1	1.1	1.9	1.9	3.3	3.3	4.9
E2-02 (E4-02)	Mot Rated Slip	Hz	2.5	2.6	2.6	2.9	2.9	2.5	2.5	2.6
E2-03 (E4-03)	Mot No-Load Current	A	0.4	0.8	0.8	1.2	1.2	1.8	1.8	2.3
E2-05 (E4-05)	Motor L-L Resistance	Ω	35.98	20.56	20.56	9.842	9.842	5.156	5.156	3.577
E2-06 (E4-06)	Motor Leak Inductance	%	21.6	20.1	20.1	18.2	18.2	13.8	13.8	18.5
E2-10 (E4-10)	Motor Iron Loss	W	6	11	11	14	14	26	26	38
E5-01	PM Mot Code Selection	-	FFFF	FFFF	FFFF	FFFF	FFFF	FFFF	FFFF	FFFF
L2-02	RideThrough Time@Power Loss	s	0.1	0.1	0.1	0.1	0.1	0.1	0.2	0.2
L2-03	Min Baseblck Time	s	0.2	0.3	0.2	0.3	0.2	0.3	0.3	0.4
L2-04	Powloss Ramp Time@recovery	s	0.3	0.3	0.3	0.3	0.3	0.3	0.3	0.3
L2-05	UV Detection Lvl (Uv1)	-	190	190	190	190	190	190	190	190
L3-02	StallP Level@Accel	%	150	120	150	120	150	120	150	120
L3-06	StallP Level@Run	%	150	120	150	120	150	120	150	120
L3-24	Acc@Rated Torque	s	0.178	0.178	0.178	0.178	0.178	0.142	0.142	0.142
L8-02	Overheat Alm Level	°C	115	115	115	115	115	115	120	120

No. *1	Name	Unit	Default							
-	Drive Model	-	2001		2002		2004		2006	
C6-01	ND/HD Duty Selection	-	HD	ND	HD	ND	HD	ND	HD	ND
			0	1	0	1	0	1	0	1
o2-04	Drive KVA Selection	Hex.	60		61		62		63	
E2-11 (E4-11, E5-02)	Motor Rated Power (kW)	kW	0.1	0.2	0.2	0.4	0.4	0.75	0.75	1.1
L8-09	Ground Fault Selection	-	0	0	0	0	0	0	0	0
n1-03	HuntPrev Time Constant	ms	10	10	10	10	10	10	10	10
n3-02	HSB CurrLim Level	1	150	120	150	120	150	120	150	120
n5-02	Mot Inertia Acceleration Time	s	0.178	0.178	0.178	0.142	0.178	0.142	0.142	0.142

*1 Parameters within parentheses are for motor 2.

No. *1	Name	Unit	Default							
-	Drive Model	-	2008		2010		2012		2018	
C6-01	ND/HD Duty Selection	-	HD	ND	HD	ND	HD	ND	HD	ND
			0	1	0	1	0	1	0	1
o2-04	Drive KVA Selection	Hex.	64		65		66		67	
E2-11 (E4-11, E5-02)	Motor Rated Power (kW)	kW	1.1	1.5	1.5	2.2	2.2	3.0	3.0	3.7
b3-04	SpSrch V/F Gain	%	100	100	100	100	100	100	100	100
b3-06	Speed Curr Lev1 for Estimation	-	0.5	0.5	0.5	0.5	0.5	0.5	0.5	0.5
b3-08	Speed ACR PGain for Estimation	-	0.5	0.5	0.5	0.5	0.5	0.5	0.5	0.5
b3-26	Dir. Determ. Level	-	1000	1000	1000	1000	1000	1000	1000	1000
b8-03	eSave Filter Time	s	0.5	0.5	0.5	0.5	0.5	0.5	0.5	0.5
b8-04	eSave Coef. Value	-	196.6	169.4	169.4	156.8	156.8	136.4	136.4	122.9
C6-02	Carrier Frequency Selection	-	3	7	3	7	3	7	3	7
E2-01 (E4-01)	Mot Rated Current (FLA)	A	4.9	6.2	6.2	8.5	8.5	11.4	11.4	14
E2-02 (E4-02)	Mot Rated Slip	Hz	2.6	2.6	2.6	2.9	2.9	2.7	2.7	2.73
E2-03 (E4-03)	Mot No-Load Current	A	2.3	2.8	2.8	3	3	3.7	3.7	4.5
E2-05 (E4-05)	Motor L-L Resistance	Ω	3.577	1.997	1.997	1.601	1.601	1.034	1.034	0.771
E2-06 (E4-06)	Motor Leak Inductance	%	18.5	18.5	18.5	18.4	18.4	19	19	19.6
E2-10 (E4-10)	Motor Iron Loss	W	38	53	53	77	77	91	91	112
E5-01	PM Mot Code Selection	-	FFFF	FFFF	FFFF	FFFF	FFFF	FFFF	FFFF	FFFF
L2-02	RideThrough Time@Power Loss	s	0.3	0.3	0.3	0.3	0.5	0.5	1	1
L2-03	Min Baseblck Time	s	0.4	0.4	0.4	0.5	0.5	0.5	0.5	0.6

No. *1	Name	Unit	Default							
-	Drive Model	-	2008		2010		2012		2018	
C6-01	ND/HD Duty Selection	-	HD	ND	HD	ND	HD	ND	HD	ND
			0	1	0	1	0	1	0	1
o2-04	Drive KVA Selection	Hex.	64		65		66		67	
E2-11 (E4-11, E5-02)	Motor Rated Power (kW)	kW	1.1	1.5	1.5	2.2	2.2	3.0	3.0	3.7
L2-04	Powloss Ramp Time@recovery	s	0.3	0.3	0.3	0.3	0.3	0.3	0.3	0.3
L2-05	UV Detection Lvl (Uv1)	-	190	190	190	190	190	190	190	190
L3-02	StallP Level@Accel	%	150	120	150	120	150	120	150	120
L3-06	StallP Level@Run	%	150	120	150	120	150	120	150	120
L3-24	Acc@Rated Torque	s	0.142	0.166	0.166	0.145	0.145	0.145	0.145	0.154
L8-02	Overheat Alm Level	°C	110	110	110	110	110	110	115	115
L8-09	Ground Fault Selection	-	0	0	0	0	0	0	0	0
n1-03	HuntPrev Time Constant	ms	10	10	10	10	10	10	10	10
n3-02	HSB CurrLim Level	1	150	120	150	120	150	120	150	120
n5-02	Mot Inertia Acceleration Time	s	0.142	0.166	0.166	0.145	0.145	0.145	0.145	0.154

*1 Parameters within parentheses are for motor 2.

No. *1	Name	Unit	Default							
-	Drive Model	-	2021		2030		2042		2056	
C6-01	ND/HD Duty Selection	-	HD	ND	HD	ND	HD	ND	HD	ND
			0	1	0	1	0	1	0	1
o2-04	Drive KVA Selection	Hex.	68		6A		6B		6D	
E2-11 (E4-11, E5-02)	Motor Rated Power (kW)	kW	3.7	5.5	5.5	7.5	7.5	11	11	15
b3-04	SpSrch V/F Gain	%	100	100	100	100	100	100	100	100
b3-06	Speed Curr Lev1 for Estimation	-	0.5	0.5	0.5	0.5	0.5	0.5	0.5	0.5
b3-08	Speed ACR PGain for Estimation	-	0.5	0.5	0.5	0.5	0.5	0.5	0.5	0.5
b3-26	Dir. Determ. Level	-	1000	1000	1000	1000	1000	1000	1000	1000
b8-03	eSave Filter Time	s	0.5	0.5	0.5	0.5	0.5	0.5	0.5	0.5
b8-04	eSave Coef. Value	-	122.9	94.75	94.75	72.69	72.69	70.44	70.44	63.13
C6-02	Carrier Frequency Selection	-	3	7	3	7	3	7	3	7
E2-01 (E4-01)	Mot Rated Current (FLA)	A	14	19.6	19.6	26.6	26.6	39.7	39.7	53
E2-02 (E4-02)	Mot Rated Slip	Hz	2.73	1.5	1.5	1.3	1.3	1.7	1.7	1.6
E2-03 (E4-03)	Mot No-Load Current	A	4.5	5.1	5.1	8	8	11.2	11.2	15.2

No. *1	Name	Unit	Default							
-	Drive Model	-	2021		2030		2042		2056	
C6-01	ND/HD Duty Selection	-	HD	ND	HD	ND	HD	ND	HD	ND
			0	1	0	1	0	1	0	1
o2-04	Drive KVA Selection	Hex.	68		6A		6B		6D	
E2-11 (E4-11, E5-02)	Motor Rated Power (kW)	kW	3.7	5.5	5.5	7.5	7.5	11	11	15
E2-05 (E4-05)	Motor L-L Resistance	Ω	0.771	0.399	0.399	0.288	0.288	0.23	0.23	0.138
E2-06 (E4-06)	Motor Leak Inductance	%	19.6	18.2	18.2	15.5	15.5	19.5	19.5	17.2
E2-10 (E4-10)	Motor Iron Loss	W	112	172	172	262	262	245	245	272
E5-01	PM Mot Code Selection	-	FFFF	FFFF	FFFF	FFFF	FFFF	FFFF	FFFF	FFFF
L2-02	RideThrough Time@Power Loss	s	1	1	1	1	1	1	2	2
L2-03	Min Baseblck Time	s	0.6	0.7	0.7	0.8	0.8	0.9	0.9	1
L2-04	Powloss Ramp Time@recovery	s	0.3	0.3	0.3	0.3	0.3	0.3	0.3	0.6
L2-05	UV Detection Lvl (Uv1)	-	190	190	190	190	190	190	190	190
L3-02	StallP Level@Accel	%	150	120	150	120	150	120	150	120
L3-06	StallP Level@Run	%	150	120	150	120	150	120	150	120
L3-24	Acc@Rated Torque	s	0.154	0.168	0.168	0.175	0.175	0.265	0.265	0.244
L8-02	Overheat Alm Level	°C	115	115	105	105	115	115	125	125
L8-09	Ground Fault Selection	-	0	0	1	1	1	1	1	1
n1-03	HuntPrev Time Constant	ms	10	10	10	10	10	10	10	10
n3-02	HSB CurrLim Level	1	150	120	150	120	150	120	150	120
n5-02	Mot Inertia Acceleration Time	s	0.154	0.168	0.168	0.175	0.175	0.265	0.265	0.244

*1 Parameters within parentheses are for motor 2.

No. *1	Name	Unit	Default			
-	Drive Model	-	2070		2082	
C6-01	ND/HD Duty Selection	-	HD	ND	HD	ND
			0	1	0	1
o2-04	Drive KVA Selection	Hex.	6E		6F	
E2-11 (E4-11, E5-02)	Motor Rated Power (kW)	kW	15	18.5	18.5	22
b3-04	SpSrch V/F Gain	%	100	100	100	100
b3-06	Speed Curr Lev1 for Estimation	-	0.5	0.5	0.5	0.5
b3-08	Speed ACR PGain for Estimation	-	0.5	0.5	0.5	0.5
b3-26	Dir. Determ. Level	-	1000	1000	1000	1000
b8-03	eSave Filter Time	s	0.5	0.5	0.5	0.5
b8-04	eSave Coef. Value	-	63.13	57.87	57.87	51.79

No. *1	Name	Unit	Default			
-	Drive Model	-	2070		2082	
C6-01	ND/HD Duty Selection	-	HD	ND	HD	ND
			0	1	0	1
o2-04	Drive KVA Selection	Hex.	6E		6F	
E2-11 (E4-11, E5-02)	Motor Rated Power (kW)	kW	15	18.5	18.5	22
C6-02	Carrier Frequency Selection	-	3	7	3	7
E2-01 (E4-01)	Mot Rated Current (FLA)	A	53	65.8	65.8	77.2
E2-02 (E4-02)	Mot Rated Slip	Hz	1.6	1.67	1.67	1.7
E2-03 (E4-03)	Mot No-Load Current	A	15.2	15.7	15.7	18.5
E2-05 (E4-05)	Motor L-L Resistance	Ω	0.138	0.101	0.101	0.079
E2-06 (E4-06)	Motor Leak Inductance	%	17.2	15.7	20.1	19.5
E2-10 (E4-10)	Motor Iron Loss	W	272	505	505	538
E5-01	PM Mot Code Selection	-	FFFF	FFFF	FFFF	FFFF
L2-02	RideThrough Time@Power Loss	s	2	2	2	2
L2-03	Min Baseblck Time	s	1	1	1	1
L2-04	Powloss Ramp Time@recovery	s	0.6	0.6	0.6	0.6
L2-05	UV Detection Lvl (Uv1)	-	190	190	190	190
L3-02	StallP Level@Accel	%	150	120	150	120
L3-06	StallP Level@Run	%	150	120	150	120
L3-24	Acc@Rated Torque	s	0.244	0.317	0.317	0.355
L8-02	Overheat Alm Level	°C	120	120	135	135
L8-09	Ground Fault Selection	-	1	1	1	1
n1-03	HuntPrev Time Constant	ms	10	10	10	10
n3-02	HSB CurrLim Level	%	150	120	150	120
n5-02	Mot Inertia Acceleration Time	s	0.244	0.317	0.317	0.355

*1 Parameters within parentheses are for motor 2.

◆ Single-Phase 200 V Class

No. *1	Name	Unit	Default							
-	Drive Model	-	B001		B002		B004		B006	
C6-01	ND/HD Duty Selection	-	HD	ND	HD	ND	HD	ND	HD	ND
			0	1	0	1	0	1	0	1
o2-04	Drive KVA Selection	Hex.	30		31		32		33	
E2-11 (E4-11, E5-02)	Motor Rated Power (kW)	kW	0.1	0.2	0.2	0.4	0.4	0.75	0.75	1.1
b3-04	SpSrch V/F Gain	%	100	100	100	100	100	100	100	100
b3-06	Speed Curr Lev1 for Estimation	-	1	1	1	1	1	1	0.5	0.5

No. *1	Name	Unit	Default							
-	Drive Model	-	B001		B002		B004		B006	
C6-01	ND/HD Duty Selection	-	HD	ND	HD	ND	HD	ND	HD	ND
			0	1	0	1	0	1	0	1
o2-04	Drive KVA Selection	Hex.	30		31		32		33	
E2-11 (E4-11, E5-02)	Motor Rated Power (kW)	kW	0.1	0.2	0.2	0.4	0.4	0.75	0.75	1.1
b3-08	Speed ACR PGain for Estimation	-	0.5	0.5	0.5	0.5	0.5	0.5	0.5	0.5
b3-26	Dir. Determ. Level	-	1000	1000	1000	1000	1000	1000	1000	1000
b8-03	eSave Filter Time	s	0.5	0.5	0.5	0.5	0.5	0.5	0.5	0.5
b8-04	eSave Coef. Value	-	481.7	356.9	356.9	288.2	288.2	223.7	223.7	196.6
C6-02	Carrier Frequency Selection	-	4	7	4	7	4	7	4	7
E2-01 (E4-01)	Mot Rated Current (FLA)	A	0.6	1.1	1.1	1.9	1.9	3.3	3.3	6.2
E2-02 (E4-02)	Mot Rated Slip	Hz	2.5	2.6	2.6	2.9	2.9	2.5	2.5	2.6
E2-03 (E4-03)	Mot No-Load Current	A	0.4	0.8	0.8	1.2	1.2	1.8	1.8	2.8
E2-05 (E4-05)	Motor L-L Resistance	Ω	35.98	20.56	20.56	9.842	9.842	5.156	5.156	1.997
E2-06 (E4-06)	Motor Leak Inductance	%	21.6	20.1	20.1	18.2	18.2	13.8	13.8	18.5
E2-10 (E4-10)	Motor Iron Loss	W	6	11	11	14	14	26	26	53
E5-01	PM Mot Code Selection	-	FFFF	FFFF	FFFF	FFFF	FFFF	FFFF	FFFF	FFFF
L2-02	RideThrough Time@Power Loss	s	0.1	0.1	0.1	0.1	0.1	0.1	0.2	0.2
L2-03	Min Baseblck Time	s	0.2	0.3	0.2	0.3	0.2	0.3	0.3	0.4
L2-04	Powloss Ramp Time@recovery	s	0.3	0.3	0.3	0.3	0.3	0.3	0.3	0.3
L2-05	UV Detection Lvl (Uv1)	-	160	160	160	160	160	160	160	160
L3-02	StallP Level@Accel	%	150	120	150	120	150	120	150	120
L3-06	StallP Level@Run	%	150	120	150	120	150	120	150	120
L3-24	Acc@Rated Torque	s	0.178	0.178	0.178	0.178	0.178	0.142	0.142	0.142
L8-02	Overheat Alm Level	°C	105	105	105	105	115	115	115	115
L8-09	Ground Fault Selection	-	0	0	0	0	0	0	0	0
n1-03	HuntPrev Time Constant	ms	10	10	10	10	10	10	10	10
n3-02	HSB CurrLim Level	%	150	120	150	120	150	120	150	120
n5-02	Mot Inertia Acceleration Time	s	0.178	0.178	0.178	0.142	0.178	0.142	0.142	0.142

*1 Parameters within parentheses are for motor 2.

No. *1	Name	Unit	Default					
-	Drive Model	-	B010		B012		B018	
C6-01	ND/HD Duty Selection	-	HD	ND	HD	ND	HD	ND
			0	1	0	1	0	1
o2-04	Drive KVA Selection	Hex.	34		35		37	
E2-11 (E4-11, E5-02)	Motor Rated Power (kW)	kW	1.5	2.2	2.2	3.0	3.7	5.5
b3-04	SpSrch V/F Gain	%	100	100	100	100	100	100
b3-06	Speed Curr Lev1 for Estimation	-	0.5	0.5	0.5	0.5	0.5	0.5
b3-08	Speed ACR PGain for Estimation	-	0.5	0.5	0.5	0.5	0.5	0.5
b3-26	Dir. Determ. Level	-	1000	1000	1000	1000	1000	1000
b8-03	eSave Filter Time	s	0.5	0.5	0.5	0.5	0.5	0.5
b8-04	eSave Coef. Value	-	169.4	156.8	156.8	136.4	122.9	94.75
C6-02	Carrier Frequency Selection	-	3	7	3	7	3	7
E2-01 (E4-01)	Mot Rated Current (FLA)	A	6.2	8.5	8.5	11.4	14	19.6
E2-02 (E4-02)	Mot Rated Slip	Hz	2.6	2.9	2.9	2.7	2.73	1.5
E2-03 (E4-03)	Mot No-Load Current	A	2.8	3	3	3.7	4.5	5.1
E2-05 (E4-05)	Motor L-L Resistance	Ω	1.997	1.601	1.601	1.034	0.771	0.399
E2-06 (E4-06)	Motor Leak Inductance	%	18.5	18.4	18.4	19	19.6	18.2
E2-10 (E4-10)	Motor Iron Loss	W	53	77	77	91	112	172
E5-01	PM Mot Code Selection	-	FFFF	FFFF	FFFF	FFFF	FFFF	FFFF
L2-02	RideThrough Time@Power Loss	s	0.3	0.3	0.5	0.5	1	1
L2-03	Min Baseblck Time	s	0.4	0.5	0.5	0.5	0.6	0.7
L2-04	Powloss Ramp Time@recovery	s	0.3	0.3	0.3	0.3	0.3	0.3
L2-05	UV Detection Lvl (Uv1)	-	160	160	160	160	160	160
L3-02	StallP Level@Accel	%	150	120	150	120	150	120
L3-06	StallP Level@Run	%	150	120	150	120	150	120
L3-24	Acc@Rated Torque	s	0.166	0.145	0.145	0.145	0.154	0.168
L8-02	Overheat Alm Level	°C	105	105	110	110	115	115
L8-09	Ground Fault Selection	-	0	0	0	0	0	0
n1-03	HuntPrev Time Constant	ms	10	10	10	10	10	10
n3-02	HSB CurrLim Level	%	150	120	150	120	150	120
n5-02	Mot Inertia Acceleration Time	s	0.166	0.145	0.145	0.145	0.154	0.168

*1 Parameters within parentheses are for motor 2.

◆ Three-Phase 400 V Class

No. *1	Name	Unit	Default							
-	Drive Model	-	4001		4002		4004		4005	
C6-01	ND/HD Duty Selection	-	HD	ND	HD	ND	HD	ND	HD	ND
			0	1	0	1	0	1	0	1
o2-04	Drive KVA Selection	Hex.	91		92		93		94	
E2-11 (E4-11, E5-02)	Motor Rated Power (kW)	kW	0.2	0.4	0.4	0.75	0.75	1.5	1.5	2.2
b3-04	SpSrch V/F Gain	%	100	100	100	100	100	100	100	100
b3-06	Speed Curr Lev1 for Estimation	-	1.0	1.0	0.5	0.5	0.5	0.5	0.5	0.5
b3-08	Speed ACR PGain for Estimation	-	0.5	0.5	0.5	0.5	0.5	0.5	0.5	0.5
b3-26	Dir. Determ. Level	-	1000	1000	1000	1000	1000	1000	1000	1000
b8-03	eSave Filter Time	s	0.5	0.5	0.5	0.5	0.5	0.5	0.5	0.5
b8-04	eSave Coef. Value	-	713.8	576.4	576.4	447.4	447.4	338.8	338.8	313.6
C6-02	Carrier Frequency Selection	-	3	7	3	7	3	7	3	7
E2-01 (E4-01)	Mot Rated Current (FLA)	A	0.6	1	1	1.6	1.6	3.1	3.1	4.2
E2-02 (E4-02)	Mot Rated Slip	Hz	2.5	2.9	2.9	2.6	2.6	2.5	2.5	3
E2-03 (E4-03)	Mot No-Load Current	A	0.4	0.6	0.6	0.8	0.8	1.4	1.4	1.5
E2-05 (E4-05)	Motor L-L Resistance	Ω	83.94	38.198	38.198	22.459	22.459	10.1	10.1	6.495
E2-06 (E4-06)	Motor Leak Inductance	%	21.9	18.2	18.2	14.3	14.3	18.3	18.3	18.7
E2-10 (E4-10)	Motor Iron Loss	W	12	14	14	26	26	53	53	77
E5-01	PM Mot Code Selection	-	FFFF	FFFF	FFFF	FFFF	FFFF	FFFF	FFFF	FFFF
L2-02	RideThrough Time@Power Loss	s	0.1	0.1	0.1	0.1	0.2	0.2	0.3	0.3
L2-03	Min Baseblck Time	s	0.2	0.2	0.2	0.3	0.3	0.4	0.4	0.5
L2-04	Powloss Ramp Time@recovery	s	0.3	0.3	0.3	0.3	0.3	0.3	0.3	0.3
L2-05	UV Detection Lvl (Uv1)	-	380	380	380	380	380	380	380	380
L3-02	StallP Level@Accel	%	150	120	150	120	150	120	150	120
L3-06	StallP Level@Run	%	150	120	150	120	150	120	150	120
L3-24	Acc@Rated Torque	s	0.178	0.178	0.178	0.142	0.142	0.166	0.166	0.145
L8-02	Overheat Alm Level	°C	120	120	120	120	105	105	90	90
L8-09	Ground Fault Selection	-	0	0	0	0	0	0	0	0
n1-03	HuntPrev Time Constant	ms	10	10	10	10	10	10	10	10

No. *1	Name	Unit	Default							
-	Drive Model	-	4001		4002		4004		4005	
C6-01	ND/HD Duty Selection	-	HD	ND	HD	ND	HD	ND	HD	ND
			0	1	0	1	0	1	0	1
o2-04	Drive KVA Selection	Hex.	91		92		93		94	
E2-11 (E4-11, E5-02)	Motor Rated Power (kW)	kW	0.2	0.4	0.4	0.75	0.75	1.5	1.5	2.2
n3-02	HSB CurrLim Level	%	150	120	150	120	150	120	150	120
n5-02	Mot Inertia Acceleration Time	s	0.178	0.178	0.178	0.142	0.142	0.166	0.166	0.145

*1 Parameters within parentheses are for motor 2.

No. *1	Name	Unit	Default							
-	Drive Model	-	4007		4009		4012		4018	
C6-01	ND/HD Duty Selection	-	HD	ND	HD	ND	HD	ND	HD	ND
			0	1	0	1	0	1	0	1
o2-04	Drive KVA Selection	Hex.	95		96		97		99	
E2-11 (E4-11, E5-02)	Motor Rated Power (kW)	kW	2.2	3.0	3.0	3.7	4.0	5.5	5.5	7.5
b3-04	SpSrch V/F Gain	%	100	100	100	100	100	100	100	100
b3-06	Speed Curr Lev1 for Estimation	-	0.5	0.5	0.5	0.5	0.5	0.5	0.5	0.5
b3-08	Speed ACR PGain for Estimation	-	0.5	0.5	0.5	0.5	0.5	0.5	0.5	0.5
b3-26	Dir. Determ. Level	-	1000	1000	1000	1000	1000	1000	1000	1000
b8-03	eSave Filter Time	s	0.5	0.5	0.5	0.5	0.5	0.5	0.5	0.5
b8-04	eSave Coef. Value	-	313.6	265.7	265.7	245.8	245.8	189.5	189.5	145.38
C6-02	Carrier Frequency Selection	-	3	7	3	7	3	7	3	7
E2-01 (E4-01)	Mot Rated Current (FLA)	A	4.2	5.7	5.7	7	7	9.8	9.8	13.3
E2-02 (E4-02)	Mot Rated Slip	Hz	3	2.7	2.7	2.7	2.7	1.5	1.5	1.3
E2-03 (E4-03)	Mot No-Load Current	A	1.5	1.9	1.9	2.3	2.3	2.6	2.6	4
E2-05 (E4-05)	Motor L-L Resistance	Ω	6.495	4.36	4.36	3.333	3.333	1.595	1.595	1.152
E2-06 (E4-06)	Motor Leak Inductance	%	18.7	19	19	19.3	19.3	18.2	18.2	15.5
E2-10 (E4-10)	Motor Iron Loss	W	77	105	105	130	130	193	193	263
E5-01	PM Mot Code Selection	-	FFFF	FFFF	FFFF	FFFF	FFFF	FFFF	FFFF	FFFF
L2-02	RideThrough Time@Power Loss	s	0.5	0.5	0.5	0.5	0.5	0.5	0.8	0.8
L2-03	Min Baseblck Time	s	0.5	0.5	0.5	0.6	0.6	0.7	0.7	0.8
L2-04	Powloss Ramp Time@recovery	s	0.3	0.3	0.3	0.3	0.3	0.3	0.3	0.3

No. *1	Name	Unit	Default							
-	Drive Model	-	4007		4009		4012		4018	
C6-01	ND/HD Duty Selection	-	HD	ND	HD	ND	HD	ND	HD	ND
			0	1	0	1	0	1	0	1
o2-04	Drive KVA Selection	Hex.	95		96		97		99	
E2-11 (E4-11, E5-02)	Motor Rated Power (kW)	kW	2.2	3.0	3.0	3.7	4.0	5.5	5.5	7.5
L2-05	UV Detection Lvl (Uv1)	-	380	380	380	380	380	380	380	380
L3-02	StallP Level@Accel	%	150	120	150	120	150	120	150	120
L3-06	StallP Level@Run	%	150	120	150	120	150	120	150	120
L3-24	Acc@Rated Torque	s	0.145	0.145	0.145	0.154	0.154	0.168	0.168	0.175
L8-02	Overheat Alm Level	°C	90	90	115	115	110	110	120	120
L8-09	Ground Fault Selection	-	0	0	0	0	0	0	0	0
n1-03	HuntPrev Time Constant	ms	10	10	10	10	10	10	10	10
n3-02	HSB CurrLim Level	%	150	120	150	120	150	120	150	120
n5-02	Mot Inertia Acceleration Time	s	0.145	0.145	0.145	0.154	0.154	0.168	0.168	0.175

*1 Parameters within parentheses are for motor 2.

No. *1	Name	Unit	Default							
-	Drive Model	-	4023		4031		4038		4044	
C6-01	ND/HD Duty Selection	-	HD	ND	HD	ND	HD	ND	HD	ND
			0	1	0	1	0	1	0	1
o2-04	Drive KVA Selection	Hex.	9A		9C		9D		9E	
E2-11 (E4-11, E5-02)	Motor Rated Power (kW)	kW	7.5	11	11	15	15	18.5	18.5	22
b3-04	SpSrch V/F Gain	%	100	100	100	100	100	100	100	100
b3-06	Speed Curr Lev1 for Estimation	-	0.5	0.5	0.5	0.5	0.5	0.5	0.5	0.5
b3-08	Speed ACR PGain for Estimation	-	0.5	0.5	0.5	0.5	0.5	0.5	0.5	0.5
b3-26	Dir. Determ. Level	-	1000	1000	1000	1000	1000	1000	1000	1000
b8-03	eSave Filter Time	s	0.5	0.5	0.5	0.5	0.5	0.5	0.5	0.5
b8-04	eSave Coef. Value	-	145.38	140.88	140.88	126.26	126.26	115.74	115.74	103.58
C6-02	Carrier Frequency Selection	-	3	7	3	7	3	7	3	7
E2-01 (E4-01)	Mot Rated Current (FLA)	A	13.3	19.9	19.9	26.5	26.5	32.9	32.9	38.6
E2-02 (E4-02)	Mot Rated Slip	Hz	1.3	1.7	1.7	1.6	1.6	1.67	1.67	1.7
E2-03 (E4-03)	Mot No-Load Current	A	4	5.6	5.6	7.6	7.6	7.8	7.8	9.2
E2-05 (E4-05)	Motor L-L Resistance	Ω	1.152	0.922	0.922	0.55	0.55	0.403	0.403	0.316

No. *1	Name	Unit	Default							
-	Drive Model	-	4023		4031		4038		4044	
C6-01	ND/HD Duty Selection	-	HD	ND	HD	ND	HD	ND	HD	ND
			0	1	0	1	0	1	0	1
o2-04	Drive KVA Selection	Hex.	9A		9C		9D		9E	
E2-11 (E4-11, E5-02)	Motor Rated Power (kW)	kW	7.5	11	11	15	15	18.5	18.5	22
E2-06 (E4-06)	Motor Leak Inductance	%	15.5	19.6	19.6	17.2	17.2	20.1	20.1	23.5
E2-10 (E4-10)	Motor Iron Loss	W	263	385	385	440	440	508	508	586
E5-01	PM Mot Code Selection	-	FFFF	FFFF	FFFF	FFFF	FFFF	FFFF	FFFF	FFFF
L2-02	RideThrough Time@Power Loss	s	1	1	2	2	2	2	2	2
L2-03	Min Baseblck Time	s	0.8	0.9	0.9	1	1	1	1	1
L2-04	Powloss Ramp Time@recovery	s	0.3	0.3	0.3	0.6	0.6	0.6	0.6	0.6
L2-05	UV Detection Lvl (Uv1)	-	380	380	380	380	380	380	380	380
L3-02	StallP Level@Accel	%	150	120	150	120	150	120	150	120
L3-06	StallP Level@Run	%	150	120	150	120	150	120	150	120
L3-24	Acc@Rated Torque	s	0.175	0.265	0.265	0.244	0.244	0.317	0.317	0.355
L8-02	Overheat Alm Level	°C	120	120	120	120	120	120	125	125
L8-09	Ground Fault Selection	-	0	0	1	1	1	1	1	1
n1-03	HuntPrev Time Constant	ms	10	10	10	10	10	10	10	10
n3-02	HSB CurrLim Level	%	150	120	150	120	150	120	150	120
n5-02	Mot Inertia Acceleration Time	s	0.175	0.265	0.265	0.244	0.244	0.317	0.317	0.355

*1 Parameters within parentheses are for motor 2.

No. *1	Name	Unit	Default	
-	Drive Model	-	4060	
C6-01	ND/HD Duty Selection	-	HD	ND
			0	1
o2-04	Drive KVA Selection	Hex.	9F	
E2-11 (E4-11, E5-02)	Motor Rated Power (kW)	kW	22	30
b3-04	SpSrch V/F Gain	%	100	100
b3-06	Speed Curr Lev1 for Estimation	-	0.5	0.5
b3-08	Speed ACR PGain for Estimation	-	0.5	0.5
b3-26	Dir. Determ. Level	-	1000	1000
b8-03	eSave Filter Time	s	0.5	0.5
b8-04	eSave Coef. Value	-	103.58	92.54
C6-02	Carrier Frequency Selection	-	3	7
E2-01 (E4-01)	Mot Rated Current (FLA)	A	38.6	52.3

No. *1	Name	Unit	Default	
-	Drive Model	-	4060	
C6-01	ND/HD Duty Selection	-	HD	ND
			0	1
o2-04	Drive KVA Selection	Hex.	9F	
E2-11 (E4-11, E5-02)	Motor Rated Power (kW)	kW	22	30
E2-02 (E4-02)	Mot Rated Slip	Hz	1.7	1.8
E2-03 (E4-03)	Mot No-Load Current	A	9.2	10.9
E2-05 (E4-05)	Motor L-L Resistance	Ω	0.316	0.269
E2-06 (E4-06)	Motor Leak Inductance	%	23.5	20.7
E2-10 (E4-10)	Motor Iron Loss	W	586	750
E5-01	PM Mot Code Selection	-	FFFF	FFFF
L2-02	RideThrough Time@Power Loss	s	2	2
L2-03	Min Baseblck Time	s	1	1.1
L2-04	Powloss Ramp Time@recovery	s	0.6	0.6
L2-05	UV Detection Lvl (Uv1)	-	380	380
L3-02	StallP Level@Accel	%	150	120
L3-06	StallP Level@Run	%	150	120
L3-24	Acc@Rated Torque	s	0.355	0.323
L8-02	Overheat Alm Level	°C	115	115
L8-09	Ground Fault Selection	-	1	1
n1-03	HuntPrev Time Constant	ms	10	10
n3-02	HSB CurrLim Level	%	150	120
n5-02	Mot Inertia Acceleration Time	s	0.355	0.323

*1 Parameters within parentheses are for motor 2.

11.21 Parameters Changed by PM Motor Code Selection

Note:
The motor codes listed in these tables are the only correct setting values.

◆ Yaskawa SMRA Series SPM Motors

Table 11.5 SMRA Series Motor Code Setting for Specification of 200 V at 1800 min^{-1} (r/min)

No.	Name	Unit	Motor Code (setting value of E5-01)				
E5-01	PM Mot Code Selection	-	0002	0003	0005	0006	0008
	Voltage Class	V	200	200	200	200	200
	Capacity	kW	0.4	0.75	1.5	2.2	3.7
	Motor Rotation Speed	min^{-1}	1800	1800	1800	1800	1800
E5-02	PM Mot Rated Power (kW)	kW	0.4	0.75	1.5	2.2	3.7
E5-03	PM Mot Rated Current (FLA)	A	2.1	4.0	6.9	10.8	17.4
E5-04	PM Mot Pole Count	-	8	8	8	8	8
E5-05	PM Mot Resistance (Ohms/ Phase)	Ω	2.47	1.02	0.679	0.291	0.169
E5-06	PM d-Axis Inductance (mH/ Phase)	mH	12.7	4.8	3.9	3.6	2.5
E5-07	PM q-Axis Inductance (mH/ Phase)	mH	12.7	4.8	3.9	3.6	2.5
E5-09	PM BackEMF Vpeak (mV/ (rad/ s))	mVs/rad	0	0	0	0	0
E5-24	PM BackEMF L-L Vrms (mV/rpm)	mV/min^{-1}	62.0	64.1	73.4	69.6	72.2
E1-04	Max Output Frequency	Hz	120	120	120	120	120
E1-05	Max Output Voltage	V	200.0	200.0	200.0	200.0	200.0
E1-06	Base Frequency	Hz	120	120	120	120	120
E1-09	Min Output Frequency	Hz	6	6	6	6	6
L3-24	Acc@Rated Torque	s	0.064	0.066	0.049	0.051	0.044
n5-02	Mot Inertia Acceleration Time	s	0.064	0.066	0.049	0.051	0.044
n8-49	Heavy Load Id Current	%	0	0	0	0	0

Table 11.6 SMRA Series Motor Code Setting for Specification of 200 V at 3600 min^{-1} (r/min)

No.	Name	Unit	Motor Code (setting value of E5-01)			
E5-01	PM Mot Code Selection	-	0103	0105	0106	0108
	Voltage Class	V	200	200	200	200
	Capacity	kW	0.75	1.5	2.2	3.7
	Motor Rotation Speed	min^{-1}	3600	3600	3600	3600
E5-02	PM Mot Rated Power (kW)	kW	0.75	1.5	2.2	3.7
E5-03	PM Mot Rated Current (FLA)	A	4.1	8.0	10.5	16.5
E5-04	PM Mot Pole Count	-	8	8	8	8
E5-05	PM Mot Resistance (Ohms/ Phase)	Ω	0.538	0.20	0.15	0.097
E5-06	PM d-Axis Inductance (mH/ Phase)	mH	3.2	1.3	1.1	1.1
E5-07	PM q-Axis Inductance (mH/ Phase)	mH	3.2	1.3	1.1	1.1
E5-09	PM BackEMF Vpeak (mV/ (rad/ s))	mVs/rad	0	0	0	0
E5-24	PM BackEMF L-L Vrms (mV/rpm)	mV/min^{-1}	32.4	32.7	36.7	39.7
E1-04	Max Output Frequency	Hz	240	240	240	240
E1-05	Max Output Voltage	V	200.0	200.0	200.0	200.0

No.	Name	Unit	Motor Code (setting value of E5-01)			
E1-06	Base Frequency	Hz	240	240	240	240
E1-09	Min Output Frequency	Hz	12	12	12	12
L3-24	Acc@Rated Torque	s	0.137	0.132	0.132	0.122
n5-02	Mot Inertia Acceleration Time	s	0.137	0.132	0.132	0.122
n8-49	Heavy Load Id Current	%	0	0	0	0

◆ Yaskawa SMRD Series SPM Motors

Table 11.7 SMRD Series Motor Code Setting for Specification of 200 V at 1800 min^{-1} (r/min)

No.	Name	Unit	Motor Code (setting value of E5-01)		
E5-01	PM Mot Code Selection	-	3000	3001	3002
	Voltage Class	V	200	200	200
	Capacity	kW	0.1	0.2	0.4
	Motor Rotation Speed	min^{-1}	1800	1800	1800
E5-02	PM Mot Rated Power (kW)	kW	0.1	0.2	0.4
E5-03	PM Mot Rated Current (FLA)	A	0.64	1	1.9
E5-04	PM Mot Pole Count	-	6	6	6
E5-05	PM Mot Resistance (Ohms/Phase)	Ω	17.200	9.960	3.590
E5-06	PM d-Axis Inductance (mH/Phase)	mH	33.20	19.40	11.90
E5-07	PM q-Axis Inductance (mH/Phase)	mH	33.20	19.40	11.90
E5-09	PM BackEMF Vpeak (mV/(rad/ s))	mVs/rad	0.0	0.0	0.0
E5-24	PM BackEMF L-L Vrms (mV/rpm)	mV/min^{-1}	59.1	69.8	75.9
E1-04	Max Output Frequency	Hz	90.0	90.0	90.0
E1-05	Max Output Voltage	V	200.0	200.0	200.0
E1-06	Base Frequency	Hz	90.0	90.0	90.0
E1-09	Min Output Frequency	Hz	9.0	9.0	9.0
L3-24	Acc@Rated Torque	s	0.100	0.100	0.100
n5-02	Mot Inertia Acceleration Time	s	0.100	0.100	0.100
n8-49	Heavy Load Id Current	%	0.0	0.0	0.0

Table 11.8 SMRD Series Motor Code Setting for Specification of 200 V at 3600 min^{-1} (r/min)

No.	Name	Unit	Motor Code (setting value of E5-01)		
E5-01	PM Mot Code Selection	-	3101	3102	3103
	Voltage Class	V	200	200	200
	Capacity	kW	0.2	0.4	0.75
	Motor Rotation Speed	min^{-1}	3600	3600	3600
E5-02	PM Mot Rated Power (kW)	kW	0.20	0.40	0.75
E5-03	PM Mot Rated Current (FLA)	A	1.50	2.60	4.20
E5-04	PM Mot Pole Count	-	6	6	6
E5-05	PM Mot Resistance (Ohms/Phase)	Ω	3.340	1.560	0.541
E5-06	PM d-Axis Inductance (mH/Phase)	mH	6.58	3.82	2.24
E5-07	PM q-Axis Inductance (mH/Phase)	mH	6.58	3.82	2.24
E5-09	PM BackEMF Vpeak (mV/(rad/ s))	mVs/rad	0.0	0.0	0.0
E5-24	PM BackEMF L-L Vrms (mV/ rpm)	mV/min^{-1}	26.3	31.0	32.9
E1-04	Max Output Frequency	Hz	180.0	180.0	180.0
E1-05	Max Output Voltage	V	200.0	200.0	200.0
E1-06	Base Frequency	Hz	180.0	180.0	180.0

No.	Name	Unit	Motor Code (setting value of E5-01)		
E1-09	Min Output Frequency	Hz	18.0	18.0	18.0
L3-24	Acc@Rated Torque	s	0.100	0.100	0.100
n5-02	Mot Inertia Acceleration Time	s	0.100	0.100	0.100
n8-49	Heavy Load Id Current	%	0.0	0.0	0.0

◆ Yaskawa SSR1 Series IPM Motors (Derated Torque)

Table 11.9 SSR1 Series Motor Code Setting for Specification of 200 V at 1750 min^{-1} (r/min)

No.	Name	Unit	Motor Code (setting value of E5-01)					
E5-01	PM Mot Code Selection	-	1202	1203	1205	1206	1208	120A
	Voltage Class	V	200	200	200	200	200	200
	Capacity	kW	0.4	0.75	1.5	2.2	3.7	5.5
	Motor Rotation Speed	min^{-1}	1750	1750	1750	1750	1750	1750
E5-02	PM Mot Rated Power (kW)	kW	0.4	0.75	1.5	2.2	3.7	5.5
E5-03	PM Mot Rated Current (FLA)	A	1.77	3.13	5.73	8.44	13.96	20.63
E5-04	PM Mot Pole Count	-	6	6	6	6	6	6
E5-05	PM Mot Resistance (Ohms/ Phase)	Ω	8.233	2.284	1.470	0.827	0.455	0.246
E5-06	PM d-Axis Inductance (mH/ Phase)	mH	54.84	23.02	17.22	8.61	7.20	4.86
E5-07	PM q-Axis Inductance (mH/ Phase)	mH	64.10	29.89	20.41	13.50	10.02	7.43
E5-09	PM BackEMF Vpeak (mV/ (rad/ s))	mVs/rad	223.7	220.3	240.8	238.0	238.7	239.6
E5-24	PM BackEMF L-L Vrms (mV/rpm)	mV/min^{-1}	0.0	0.0	0.0	0.0	0.0	0.0
E1-04	Max Output Frequency	Hz	87.5	87.5	87.5	87.5	87.5	87.5
E1-05	Max Output Voltage	V	190.0	190.0	190.0	190.0	190.0	190.0
E1-06	Base Frequency	Hz	87.5	87.5	87.5	87.5	87.5	87.5
E1-09	Min Output Frequency	Hz	4.4	4.4	4.4	4.4	4.4	4.4
L3-24 *1	Acc@Rated Torque	s	0.092	0.076	0.051	0.066	0.075	0.083
n5-02	Mot Inertia Acceleration Time	s	0.092	0.076	0.051	0.066	0.075	0.083
n8-49	Heavy Load Id Current	%	-7.6	-11.5	-9.1	-19.0	-18.7	-23.4

*1 The default setting changes when the setting for *o2-04 [Drive KVA Selection]* changes.

Table 11.10 SSR1 Series Motor Code Setting for Specification of 200 V at 1750 min^{-1} (r/min)

No.	Name	Unit			Motor Code (setting value of E5-01)		
E5-01	PM Mot Code Selection	-	120B	120D	120E	120F	1210
	Voltage Class	V	200	200	200	200	200
	Capacity	kW	7.5	11	15	18.5	22
	Motor Rotation Speed	min^{-1}	1750	1750	1750	1750	1750
E5-02	PM Mot Rated Power (kW)	kW	7.5	11.0	15.00	18.50	22.00
E5-03	PM Mot Rated Current (FLA)	A	28.13	41.4	55.4	68.2	80.6
E5-04	PM Mot Pole Count	-	6	6	6	6	6
E5-05	PM Mot Resistance (Ohms/ Phase)	Ω	0.198	0.094	0.066	0.051	0.037
E5-06	PM d-Axis Inductance (mH/ Phase)	mH	4.15	3.40	2.45	2.18	1.71
E5-07	PM q-Axis Inductance (mH/ Phase)	mH	5.91	3.91	3.11	2.55	2.05
E5-09	PM BackEMF Vpeak (mV/(rad/ s))	mVs/rad	258.2	239.3	248.1	253.6	250.0

No.	Name	Unit			Motor Code (setting value of E5-01)		
E5-24	PM BackEMF L-L Vrms (mV/rpm)	mV/min-1	0.0	0.0	0.0	0.0	0.0
E1-04	Max Output Frequency	Hz	87.5	87.5	87.5	87.5	87.5
E1-05	Max Output Voltage	V	190.0	190.0	190.0	190.0	190.0
E1-06	Base Frequency	Hz	87.5	87.5	87.5	87.5	87.5
E1-09	Min Output Frequency	Hz	4.4	4.4	4.4	4.4	4.4
L3-24 *1	Acc@Rated Torque	s	0.077	0.084	0.102	0.101	0.098
n5-02	Mot Inertia Acceleration Time	s	0.077	0.084	0.102	0.101	0.098
n8-49	Heavy Load Id Current	%	-18.5	-10.9	-16.5	-11.3	-12.8

*1 The default setting changes when the setting for *o2-04 [Drive KVA Selection]* changes.

Table 11.11 SSR1 Series Motor Code Setting for Specification of 400 V at 1750 min-1 (r/min)

No.	Name	Unit	Motor Code (setting value of E5-01)					
E5-01	PM Mot Code Selection	-	1232	1233	1235	1236	1238	123A
	Voltage Class	V	400	400	400	400	400	400
	Capacity	kW	0.4	0.75	1.5	2.2	3.7	5.5
	Motor Rotation Speed	min-1	1750	1750	1750	1750	1750	1750
E5-02	PM Mot Rated Power (kW)	kW	0.4	0.75	1.5	2.2	3.7	5.5
E5-03	PM Mot Rated Current (FLA)	A	0.89	1.56	2.81	4.27	7.08	10.31
E5-04	PM Mot Pole Count	-	6	6	6	6	6	6
E5-05	PM Mot Resistance (Ohms/Phase)	Ω	25.370	9.136	6.010	3.297	1.798	0.982
E5-06	PM d-Axis Inductance (mH/Phase)	mH	169.00	92.08	67.71	34.40	32.93	22.7
E5-07	PM q-Axis Inductance (mH/Phase)	mH	197.50	119.56	81.71	54.00	37.70	26.80
E5-09	PM BackEMF Vpeak (mV/(rad/ s))	mVs/rad	392.6	440.6	478.3	466.3	478.8	478.1
E5-24	PM BackEMF L-L Vrms (mV/rpm)	mV/min-1	0.0	0.0	0.0	0.0	0.0	0.0
E1-04	Max Output Frequency	Hz	87.5	87.5	87.5	87.5	87.5	87.5
E1-05	Max Output Voltage	V	380.0	380.0	380.0	380.0	380.0	380.0
E1-06	Base Frequency	Hz	87.5	87.5	87.5	87.5	87.5	87.5
E1-09	Min Output Frequency	Hz	4.4	4.4	4.4	4.4	4.4	4.4
L3-24 *1	Acc@Rated Torque	s	0.092	0.076	0.051	0.066	0.075	0.083
n5-02	Mot Inertia Acceleration Time	s	0.092	0.076	0.051	0.066	0.075	0.083
n8-49	Heavy Load Id Current	%	-8.6	-11.5	-10.3	-19.8	-8.5	-11.0

*1 The default setting changes when the setting for *o2-04 [Drive KVA Selection]* changes.

Table 11.12 SSR1 Series Motor Code Setting for Specification of 400 V at 1750 min-1 (r/min)

No.	Name	Unit			Motor Code (setting value of E5-01)			
E5-01	PM Mot Code Selection	-	123B	123D	123E	123F	1240	1242
	Voltage Class	V	400	400	400	400	400	400
	Capacity	kW	7.5	11	15	18.5	22	30
	Motor Rotation Speed	min-1	1750	1750	1750	1750	1750	1750
E5-02	PM Mot Rated Power (kW)	kW	7.5	11.0	15	18.50	22.00	30.00
E5-03	PM Mot Rated Current (FLA)	A	13.65	20.7	27.5	33.4	39.8	52.0
E5-04	PM Mot Pole Count	-	6	6	6	6	6	6
E5-05	PM Mot Resistance (Ohms/Phase)	Ω	0.786	0.349	0.272	0.207	0.148	0.235

No.	Name	Unit			Motor Code (setting value of E5-01)			
E5-06	PM d-Axis Inductance (mH/ Phase)	mH	16.49	13.17	10.30	8.72	6.81	5.4
E5-07	PM q-Axis Inductance (mH/ Phase)	mH	23.46	15.60	12.77	11.22	8.47	7.26
E5-09	PM BackEMF Vpeak (mV/ (rad/ s))	mVs/rad	520.0	481.5	498.8	509.5	503.9	561.7
E5-24	PM BackEMF L-L Vrms (mV/rpm)	mV/min^{-1}	0.0	0.0	0.0	0.0	0.0	0.0
E1-04	Max Output Frequency	Hz	87.5	87.5	87.5	87.5	87.5	87.5
E1-05	Max Output Voltage	V	380.0	380.0	380.0	380.0	380.0	380.0
E1-06	Base Frequency	Hz	87.5	87.5	87.5	87.5	87.5	87.5
E1-09	Min Output Frequency	Hz	4.4	4.4	4.4	4.4	4.4	4.4
L3-24 *1	Acc@Rated Torque	s	0.077	0.084	0.102	0.101	0.098	0.130
n5-02	Mot Inertia Acceleration Time	s	0.077	0.084	0.102	0.101	0.098	0.130
n8-49	Heavy Load Id Current	%	-18.6	-12.5	-15.5	-17.9	-15.1	-16.8

*1 The default setting changes when the setting for *o2-04 [Drive KVA Selection]* changes.

Table 11.13 SSR1 Series Motor Code Setting for Specification of 200 V at 1450 min^{-1} (r/min)

No.	Name	Unit	Motor Code (setting value of E5-01)					
E5-01	PM Mot Code Selection	-	1302	1303	1305	1306	1308	130A
	Voltage Class	V	200	200	200	200	200	200
	Capacity	kW	0.4	0.75	1.5	2.2	3.7	5.5
	Motor Rotation Speed	min^{-1}	1450	1450	1450	1450	1450	1450
E5-02	PM Mot Rated Power (kW)	kW	0.4	0.75	1.5	2.2	3.7	5.5
E5-03	PM Mot Rated Current (FLA)	A	1.88	3.13	5.63	8.33	14.17	20.63
E5-04	PM Mot Pole Count	-	6	6	6	6	6	6
E5-05	PM Mot Resistance (Ohms/ Phase)	Ω	3.190	1.940	1.206	0.665	0.341	0.252
E5-06	PM d-Axis Inductance (mH/ Phase)	mH	32.15	26.12	14.72	12.27	8.27	6.49
E5-07	PM q-Axis Inductance (mH/ Phase)	mH	41.74	34.30	20.15	14.77	9.81	7.74
E5-09	PM BackEMF Vpeak (mV/ (rad/ s))	mVs/rad	264.3	269.6	284.3	287.1	284.5	298.0
E5-24	PM BackEMF L-L Vrms (mV/rpm)	mV/min^{-1}	0.0	0.0	0.0	0.0	0.0	0.0
E1-04	Max Output Frequency	Hz	72.5	72.5	72.5	72.5	72.5	72.5
E1-05	Max Output Voltage	V	190.0	190.0	190.0	190.0	190.0	190.0
E1-06	Base Frequency	Hz	72.5	72.5	72.5	72.5	72.5	72.5
E1-09	Min Output Frequency	Hz	3.6	3.6	3.6	3.6	3.6	3.6
L3-24 *1	Acc@Rated Torque	s	0.098	0.071	0.066	0.087	0.085	0.072
n5-02	Mot Inertia Acceleration Time	s	0.098	0.071	0.066	0.087	0.085	0.072
n8-49	Heavy Load Id Current	%	-6.6	-10.9	-13.5	-9.0	-9.5	-10.1

*1 The default setting changes when the setting for *o2-04 [Drive KVA Selection]* changes.

Table 11.14 SSR1 Series Motor Code Setting for Specification of 200 V at 1450 min^{-1} (r/min)

No.	Name	Unit			Motor Code (setting value of E5-01)		
E5-01	PM Mot Code Selection	-	130B	130D	130E	130F	1310
	Voltage Class	V	200	200	200	200	200
	Capacity	kW	7.5	11	15	18.5	22
	Motor Rotation Speed	min^{-1}	1450	1450	1450	1450	1450
E5-02	PM Mot Rated Power (kW)	kW	7.5	11.0	15.00	18.50	22.00

No.	Name	Unit			Motor Code (setting value of E5-01)		
E5-03	PM Mot Rated Current (FLA)	A	27.71	39.6	55.5	65.6	75.1
E5-04	PM Mot Pole Count	-	6	6	6	6	6
E5-05	PM Mot Resistance (Ohms/ Phase)	Ω	0.184	0.099	0.075	0.057	0.041
E5-06	PM d-Axis Inductance (mH/ Phase)	mH	6.91	4.07	3.29	2.53	1.98
E5-07	PM q-Axis Inductance (mH/ Phase)	mH	7.66	4.65	3.84	3.01	2.60
E5-09	PM BackEMF Vpeak (mV/(rad/ s))	mVs/rad	335.0	303.9	311.2	300.9	327.7
E5-24	PM BackEMF L-L Vrms (mV/ rpm)	mV/min^{-1}	0.0	0.0	0.0	0.0	0.0
E1-04	Max Output Frequency	Hz	72.5	72.5	72.5	72.5	72.5
E1-05	Max Output Voltage	V	190.0	190.0	190.0	190.0	190.0
E1-06	Base Frequency	Hz	72.5	72.5	72.5	72.5	72.5
E1-09	Min Output Frequency	Hz	3.6	3.6	3.6	3.6	3.6
L3-24 *1	Acc@Rated Torque	s	0.084	0.096	0.085	0.080	0.122
n5-02	Mot Inertia Acceleration Time	s	0.084	0.096	0.085	0.080	0.122
n8-49	Heavy Load Id Current	%	-6.0	-9.3	-10.7	-13.2	-15.7

*1 The default setting changes when the setting for *o2-04 [Drive KVA Selection]* changes.

Table 11.15 SSR1 Series Motor Code Setting for Specification of 400 V at 1450 min^{-1} (r/min)

No.	Name	Unit	Motor Code (setting value of E5-01)					
E5-01	PM Mot Code Selection	-	1332	1333	1335	1336	1338	133A
	Voltage Class	V	400	400	400	400	400	400
	Capacity	kW	0.4	0.75	1.5	2.2	3.7	5.5
	Motor Rotation Speed	min^{-1}	1450	1450	1450	1450	1450	1450
E5-02	PM Mot Rated Power (kW)	kW	0.4	0.75	1.5	2.2	3.7	5.5
E5-03	PM Mot Rated Current (FLA)	A	0.94	1.56	2.81	4.27	6.98	10.21
E5-04	PM Mot Pole Count	-	6	6	6	6	6	6
E5-05	PM Mot Resistance (Ohms/ Phase)	Ω	12.760	7.421	4.825	2.656	1.353	0.999
E5-06	PM d-Axis Inductance (mH/ Phase)	mH	128.60	85.11	58.87	46.42	31.73	26.20
E5-07	PM q-Axis Inductance (mH/ Phase)	mH	166.96	113.19	80.59	60.32	40.45	30.94
E5-09	PM BackEMF Vpeak (mV/ (rad/ s))	mVs/rad	528.6	544.2	568.5	572.8	562.9	587.6
E5-24	PM BackEMF L-L Vrms (mV/rpm)	mV/min^{-1}	0.0	0.0	0.0	0.0	0.0	0.0
E1-04	Max Output Frequency	Hz	72.5	72.5	72.5	72.5	72.5	72.5
E1-05	Max Output Voltage	V	380.0	380.0	380.0	380.0	380.0	380.0
E1-06	Base Frequency	Hz	72.5	72.5	72.5	72.5	72.5	72.5
E1-09	Min Output Frequency	Hz	3.6	3.6	3.6	3.6	3.6	3.6
L3-24 *1	Acc@Rated Torque	s	0.098	0.071	0.066	0.087	0.085	0.072
n5-02	Mot Inertia Acceleration Time	s	0.098	0.071	0.066	0.087	0.085	0.072
n8-49	Heavy Load Id Current	%	-6.6	-9.2	-13.5	-12.1	-13.7	-10.1

*1 The default setting changes when the setting for *o2-04 [Drive KVA Selection]* changes.

Table 11.16 SSR1 Series Motor Code Setting for Specification of 400 V at 1450 min^{-1} (r/min)

No.	Name	Unit			Motor Code (setting value of E5-01)			
E5-01	PM Mot Code Selection	-	133B	133D	133E	133F	1340	1342
	Voltage Class	V	400	400	400	400	400	400
	Capacity	kW	7.5	11	15	18.5	22	30
	Motor Rotation Speed	min^{-1}	1450	1450	1450	1450	1450	1450
E5-02	PM Mot Rated Power (kW)	kW	7.5	11.0	15	18.50	22.00	30.00
E5-03	PM Mot Rated Current (FLA)	A	13.85	19.5	27.4	32.9	37.6	52.5
E5-04	PM Mot Pole Count	-	6	6	6	6	6	6
E5-05	PM Mot Resistance (Ohms/ Phase)	Ω	0.713	0.393	0.295	0.223	0.164	0.137
E5-06	PM d-Axis Inductance (mH/ Phase)	mH	27.06	15.51	12.65	9.87	7.90	7.01
E5-07	PM q-Axis Inductance (mH/ Phase)	mH	33.45	19.63	15.87	12.40	10.38	8.68
E5-09	PM BackEMF Vpeak (mV/ (rad/ s))	mVs/rad	670.1	612.7	624.6	610.4	655.4	708.4
E5-24	PM BackEMF L-L Vrms (mV/rpm)	mV/min^{-1}	0.0	0.0	0.0	0.0	0.0	0.0
E1-04	Max Output Frequency	Hz	72.5	72.5	72.5	72.5	72.5	72.5
E1-05	Max Output Voltage	V	380.0	380.0	380.0	380.0	380.0	380.0
E1-06	Base Frequency	Hz	72.5	72.5	72.5	72.5	72.5	72.5
E1-09	Min Output Frequency	Hz	3.6	3.6	3.6	3.6	3.6	3.6
L3-24 *1	Acc@Rated Torque	s	0.084	0.096	0.085	0.080	0.122	0.108
n5-02	Mot Inertia Acceleration Time	s	0.084	0.096	0.085	0.080	0.122	0.108
n8-49	Heavy Load Id Current	%	-12.2	-15.5	-15.1	-16.0	-15.7	-11.5

*1 The default setting changes when the setting for *o2-04 [Drive KVA Selection]* changes.

Table 11.17 SSR1 Series Motor Code Setting for Specification of 200 V at 1150 min^{-1} (r/min)

No.	Name	Unit	Motor Code (setting value of E5-01)					
E5-01	PM Mot Code Selection	-	1402	1403	1405	1406	1408	140A
	Voltage Class	V	200	200	200	200	200	200
	Capacity	kW	0.4	0.75	1.5	2.2	3.7	5.5
	Motor Rotation Speed	min^{-1}	1150	1150	1150	1150	1150	1150
E5-02	PM Mot Rated Power (kW)	kW	0.4	0.75	1.5	2.2	3.7	5.5
E5-03	PM Mot Rated Current (FLA)	A	1.88	3.02	6.00	8.85	14.27	20.21
E5-04	PM Mot Pole Count	-	6	6	6	6	6	6
E5-05	PM Mot Resistance (Ohms/ Phase)	Ω	4.832	2.704	1.114	0.511	0.412	0.303
E5-06	PM d-Axis Inductance (mH/ Phase)	mH	48.68	32.31	19.22	12.15	7.94	11.13
E5-07	PM q-Axis Inductance (mH/ Phase)	mH	63.21	40.24	24.38	15.35	11.86	14.06
E5-09	PM BackEMF Vpeak (mV/ (rad/ s))	mVs/rad	320.4	327.1	364.4	344.4	357.5	430.8
E5-24	PM BackEMF L-L Vrms (mV/rpm)	mV/min^{-1}	0.0	0.0	0.0	0.0	0.0	0.0
E1-04	Max Output Frequency	Hz	57.5	57.5	57.5	57.5	57.5	57.5
E1-05	Max Output Voltage	V	190.0	190.0	190.0	190.0	190.0	190.0
E1-06	Base Frequency	Hz	57.5	57.5	57.5	57.5	57.5	57.5
E1-09	Min Output Frequency	Hz	2.9	2.9	2.9	2.9	2.9	2.9
L3-24 *1	Acc@Rated Torque	s	0.062	0.044	0.080	0.090	0.067	0.072

No.	Name	Unit	Motor Code (setting value of E5-01)					
n5-02	Mot Inertia Acceleration Time	s	0.062	0.044	0.080	0.090	0.067	0.072
n8-49	Heavy Load Id Current	%	-8.8	-9.9	-9.3	-10.0	-17.7	-12.3

*1 The default setting changes when the setting for *o2-04 [Drive KVA Selection]* changes.

Table 11.18 SSR1 Series Motor Code Setting for Specification of 200 V at 1150 min-1 (r/min)

No.	Name	Unit			Motor Code (setting value of E5-01)		
E5-01	PM Mot Code Selection	-	140B	140D	140E	140F	1410
	Voltage Class	V	200	200	200	200	200
	Capacity	kW	7.5	11	15	18.5	22
	Motor Rotation Speed	min-1	1150	1150	1150	1150	1150
E5-02	PM Mot Rated Power (kW)	kW	7.5	11.0	15	18.50	22.00
E5-03	PM Mot Rated Current (FLA)	A	26.67	39.9	55.6	63.5	74.4
E5-04	PM Mot Pole Count	-	6	6	6	6	6
E5-05	PM Mot Resistance (Ohms/ Phase)	Ω	0.165	0.113	0.084	0.066	0.048
E5-06	PM d-Axis Inductance (mH/ Phase)	mH	6.59	4.96	3.83	3.33	2.38
E5-07	PM q-Axis Inductance (mH/ Phase)	mH	8.55	6.12	4.65	4.50	3.15
E5-09	PM BackEMF Vpeak (mV/(rad/ s))	mVs/rad	391.5	384.4	372.1	421.3	410.9
E5-24	PM BackEMF L-L Vrms (mV/ rpm)	mV/min-1	0.0	0.0	0.0	0.0	0.0
E1-04	Max Output Frequency	Hz	57.5	57.5	57.5	57.5	57.5
E1-05	Max Output Voltage	V	190.0	190.0	190.0	190.0	190.0
E1-06	Base Frequency	Hz	57.5	57.5	57.5	57.5	57.5
E1-09	Min Output Frequency	Hz	2.9	2.9	2.9	2.9	2.9
L3-24 *1	Acc@Rated Torque	s	0.088	0.073	0.062	0.091	0.092
n5-02	Mot Inertia Acceleration Time	s	0.088	0.073	0.062	0.091	0.092
n8-49	Heavy Load Id Current	%	-15.3	-13.9	-14.4	-17.9	-15.9

*1 The default setting changes when the setting for *o2-04 [Drive KVA Selection]* changes.

Table 11.19 SSR1 Series Motor Code Setting for Specification of 400 V at 1150 min-1 (r/min)

No.	Name	Unit	Motor Code (setting value of E5-01)					
E5-01	PM Mot Code Selection	-	1432	1433	1435	1436	1438	143A
	Voltage Class	V	400	400	400	400	400	400
	Capacity	kW	0.4	0.75	1.5	2.2	3.7	5.5
	Motor Rotation Speed	min-1	1150	1150	1150	1150	1150	1150
E5-02	PM Mot Rated Power (kW)	kW	0.4	0.75	1.5	2.2	3.7	5.5
E5-03	PM Mot Rated Current (FLA)	A	0.94	1.51	3.00	4.43	7.08	10.10
E5-04	PM Mot Pole Count	-	6	6	6	6	6	6
E5-05	PM Mot Resistance (Ohms/ Phase)	Ω	19.320	10.800	4.456	2.044	1.483	1.215
E5-06	PM d-Axis Inductance (mH/ Phase)	mH	194.70	129.20	76.88	48.60	37.58	44.54
E5-07	PM q-Axis Inductance (mH/ Phase)	mH	252.84	160.90	97.52	61.40	47.65	56.26
E5-09	PM BackEMF Vpeak (mV/ (rad/ s))	mVs/rad	640.9	654.1	728.8	688.9	702.0	861.5
E5-24	PM BackEMF L-L Vrms (mV/rpm)	mV/min-1	0.0	0.0	0.0	0.0	0.0	0.0
E1-04	Max Output Frequency	Hz	57.5	57.5	57.5	57.5	57.5	57.5
E1-05	Max Output Voltage	V	380.0	380.0	380.0	380.0	380.0	380.0

No.	Name	Unit	Motor Code (setting value of E5-01)					
E1-06	Base Frequency	Hz	57.5	57.5	57.5	57.5	57.5	57.5
E1-09	Min Output Frequency	Hz	2.9	2.9	2.9	2.9	2.9	2.9
L3-24 *1	Acc@Rated Torque	s	0.062	0.044	0.080	0.090	0.067	0.072
n5-02	Mot Inertia Acceleration Time	s	0.062	0.044	0.080	0.090	0.067	0.072
n8-49	Heavy Load Id Current	%	-8.8	-9.9	-9.3	-10.0	-12.8	-12.3

*1 The default setting changes when the setting for *o2-04 [Drive KVA Selection]* changes.

Table 11.20 SSR1 Series Motor Code Setting for Specification of 400 V at 1150 min^{-1} (r/min)

No.	Name	Unit			Motor Code (setting value of E5-01)			
E5-01	PM Mot Code Selection	-	143B	143D	143E	143F	1440	1442
	Voltage Class	V	400	400	400	400	400	400
	Capacity	kW	7.5	11	15	18.5	22	30
	Motor Rotation Speed	min^{-1}	1150	1150	1150	1150	1150	1150
E5-02	PM Mot Rated Power (kW)	kW	7.5	11.0	15	18.50	22.00	30.00
E5-03	PM Mot Rated Current (FLA)	A	13.33	19.9	27.8	31.8	37.2	52.1
E5-04	PM Mot Pole Count	-	6	6	6	6	6	6
E5-05	PM Mot Resistance (Ohms/ Phase)	Ω	0.660	0.443	0.331	0.264	0.192	0.140
E5-06	PM d-Axis Inductance (mH/ Phase)	mH	26.36	19.10	15.09	13.32	9.52	8.16
E5-07	PM q-Axis Inductance (mH/ Phase)	mH	34.20	24.67	18.56	18.00	12.60	11.40
E5-09	PM BackEMF Vpeak (mV/ (rad/ s))	mVs/rad	783.0	762.2	749.6	842.7	821.8	872.3
E5-24	PM BackEMF L-L Vrms (mV/rpm)	mV/min^{-1}	0.0	0.0	0.0	0.0	0.0	0.0
E1-04	Max Output Frequency	Hz	57.5	57.5	57.5	57.5	57.5	57.5
E1-05	Max Output Voltage	V	380.0	380.0	380.0	380.0	380.0	380.0
E1-06	Base Frequency	Hz	57.5	57.5	57.5	57.5	57.5	57.5
E1-09	Min Output Frequency	Hz	2.9	2.9	2.9	2.9	2.9	2.9
L3-24 *1	Acc@Rated Torque	s	0.088	0.073	0.062	0.091	0.092	0.125
n5-02	Mot Inertia Acceleration Time	s	0.088	0.073	0.062	0.091	0.092	0.125
n8-49	Heavy Load Id Current	%	-15.3	-16.7	-14.9	-17.9	-15.9	-17.7

*1 The default setting changes when the setting for *o2-04 [Drive KVA Selection]* changes.

12

Parameter Details

12.1 A: INITIALIZATION 432
12.2 b: APPLICATION 444
12.3 C: TUNING 488
12.4 d: REFERENCE 508
12.5 E: MOTOR 524
12.6 F: OPTIONS 544
12.7 H: TERMINALS 566
12.8 L: PROTECTION 632
12.9 n: SPECIAL 676
12.10 o: KEYPAD 695
12.11 T: AUTOTUNING 716

12.1 A: INITIALIZATION

Parameters of group *A: INITIALIZATION* set the operating environment and operating conditions for the drive.

◆ A1: INITIALIZATION

A1 parameters set the operating environment and operating conditions for the drive. For example, these parameters set the keypad language, the control method, and the parameter access level for the drive.

■ A1-00: Language Selection

No. (Hex.)	Name	Description	Default (Range)
A1-00 (0100) RUN	Language Selection	V/f OLV OLV/PM AOLV/PM EZOLV Sets the language for the LCD keypad.	0 (0 - 12)

Note:
- This parameter is only available when you use an LCD keypad or a Bluetooth LCD Keypad.
- When you use *A1-03 [Init Parameters]* to initialize the drive, the drive will not set this parameter to factory default.

0 : English
1 : Japanese
2 : German
3 : French
4 : Italian
5 : Spanish
6 : Portuguese
7 : Chinese
8 : Czech
9 : Russian
10 : Turkish
11 : Polish
12 : Greek

■ A1-01: Access Level

No. (Hex.)	Name	Description	Default (Range)
A1-01 (0101) RUN	Access Level	V/f OLV OLV/PM AOLV/PM EZOLV Sets user access to parameters. The access level controls which parameters the keypad will display, and which parameters the user can set.	2 (0 - 3)

0 : Monitor only
Access to *A1-00, A1-01, A1-04 [Password Input]*, and the *U Monitors*.

1 : Manual Setup
Access to *A1-00, A1-01, A1-04*, and parameters registered to *A2-01 to A2-32 [MAN1 Param1 to MAN3 Param12]*.

2 : Standard Parameters
Access to all parameters, but not Expert Mode parameters.

3 : Expert Parameters
Access to all parameters including Expert Mode parameters.

Table 12.1 shows which keypad screens are available for each *A1-01* settings.

Table 12.1 Access Level and Available Keypad Screens

Mode	Keypad Screen	*A1-01 [Access Level]* Setting			
		0	1	2	3
Drive Mode	Monitors	Yes	Yes	Yes	Yes
Programming Mode	Parameters	Yes	Yes	Yes	Yes
	Manual Setup	No	Yes	Yes	Yes
	Parameter Backup/Restore	No	No	Yes	Yes
	Modified Parameters/Fault Log	No	No	Yes	Yes
	Auto-Tuning	No	No	Yes	Yes
	Initial Setup Screen	No	No	Yes	Yes
	Diagnostic Tools	No	No	Yes	Yes

Note:
- When you use *A1-04* and *A1-05 [Password Setting]* to set a password, you cannot change the values set in *A1-01 to A1-03, A1-07*,or *A2-01 to A2-32*.
- When *H1-xx = 7C [MFDI Function Select = Prg Lock]*, you must activate the terminal to change parameter settings.
- When you use Modbus communications, you must send the Enter command from the controller to the drive and complete the serial communication write process before you can use the keypad to change parameter settings.

■ A1-02: Control Method

No. (Hex.)	Name	Description	Default (Range)
A1-02 (0102)	Control Method	V/f OLV OLV/PM AOLV/PM EZOLV Sets the control method for the drive application and the motor.	0 (0, 2, 5, 6, 8)

Note:
When you change the *A1-02* setting, the parameter values specified by *A1-02* are changed to their default values.

Sets the control method for the drive application and the motor.

0 : V/f Control

Use this control method in these applications and conditions:

- For general variable-speed control applications in which a high level of responsiveness or high-precision speed control is not necessary.
- To connect more than one motor to one drive
- When there is not sufficient data to set the motor parameters
- When it is not possible to do Auto-Tuning. The speed control range is 1:40.

2 : OLVector

Use this control method for general variable-speed control applications in which high-precision speed control is necessary. In this control method, a feedback signal from the motor is not necessary to have high torque response and high torque when operating at low speeds. The speed control range is 1:120.

5 : PM OLVector

The drive controls an IPM motor or SPM motor in this control method. Use this control method for general variable-speed control applications in which a high level of responsiveness or high-precision speed control are not necessary. The speed control range is 1:20.

6 : PM AOLVector

The drive can control an IPM motor in this control method. Use this control method for general variable-speed control applications in which high-precision speed control and torque limit are necessary. The speed control range is 1:20. The speed control range is 1:100 when *n8-57 = 1 [High-Freq Injection = Enabled]*.

8 : EZ Vector

The drive controls induction motors and PM motors in this control method. This control method uses an easier procedure to operate motors with more efficiency. Use this control method for derating torque applications. For example, fans and pumps.

■ A1-03: Init Parameters

No. (Hex.)	Name	Description	Default (Range)
A1-03 (0103)	Init Parameters	V/f OLV OLV/PM AOLV/PM EZOLV Sets parameters to default values.	0 (0 - 3330)

Note:
- After you initialize the drive, the drive automatically sets *A1-03 = 0*.
- User Parameters can save the parameter values for your application and use these values as default values for drive initialization.
- To use the 2 motor switchover function, first turn OFF the terminal to which *H1-xx = 61 [MFDI Function Select = A1-03: Motor 2 Select]* is set, then change the *A1-03* setting. An incorrect procedure will trigger *oPE08 [Parameter Selection Error]*.

0 : No Initialization

1110 : User / Solution Initialization

Sets parameters to the values set by the user as user settings. Set *o2-03 = 1 [UserPar Set Default Values = Set defaults]* to save the user settings.

You can save the parameter settings that were adjusted for the test run as user-set default values to the drive. When you make changes to the parameter values after you save the settings as User Parameter Settings, the drive will set the parameters to the User Parameter Setting value when you initialize with *A1-03 = 1110*.

Follow this procedure to save User Parameter setting values, and to do a User Initialization.

1. Set parameters correctly for the application.
2. Set *o2-03 = 1 [UserPar Set Default Values = Set defaults]*.
   This saves parameter settings for a User Initialization.
   The drive will then automatically set *o2-03 = 0*.
3. Set *A1-03 = 1110* to reset to the saved parameter settings.
   When you initialize the drive, the drive sets the parameter values to the User Parameter setting values.

2220 : 2-Wire Initialization

Sets MFDI terminal DI1 to Forward Run and terminal DI2 to Reverse Run, and resets all parameters to default settings.

3330 : 3-Wire Initialization

Sets MFDI terminal DI1 to Run, terminal DI2 to Stop, and terminal DI5 to FWD/REV, and resets all parameters to default settings.

The drive will not initialize the parameters in Table 12.2 when *A1-03 = 2220, 3330*.

Table 12.2 Parameters that are not Initialized Using a 2-Wire Sequence or a 3-Wire Sequence

No.	Name
A1-00	Language Selection
A1-02	Control Method
A1-07	Q2pack Enable
E1-03	V/f Pattern Selection
E5-01	PM Mot Code Selection
E5-02	PM Mot Rated Power (kW)
E5-03	PM Mot Rated Current (FLA)
E5-04	PM Mot Pole Count
E5-05	PM Mot Resistance (Ohms/Phase)
E5-06	PM d-Axis Inductance (mH/Phase)
E5-07	PM q-Axis Inductance (mH/Phase)

No.	Name
E5-09	PM BackEMF Vpeak (mV/(rad/ s))
E5-24	PM BackEMF L-L Vrms (mV/rpm)
E5-25	Polar Est Timeout
F6-08	Comm Par RST@Initialize
F6-xx/F7-xx	Communication Option Parameters Set *F6-08 = 1 [Comm Par RST@Initialize = Factory Default - Reset]* to initialize communication option parameters.
L8-35	Installation Selection
o2-04	Drive KVA Selection
q1-xx - q8-xx	q1-01 to q8-40: Q2pack Parameters
r1-xx	r1: Q2PACK JOINTS

Note:
- When *A1-03 = 2220, 3330*, the drive automatically set *A1-05 [Password Setting] = 0000*. Make sure that you set the password again for applications where a password is necessary.

■ A1-04: Password Input

No. (Hex.)	Name	Description	Default (Range)
A1-04 (0104)	Password Input	V/f OLV OLV/PM AOLV/PM EZOLV Entry point for the password set in *A1-05 [Password Setting]*. The user can view the settings of parameters that are locked without entering the password. Enter the correct password in this parameter to change parameter settings.	0000 (0000 - 9999)

If the password entered in *A1-04* does not agree with the password setting in *A1-05*, you cannot change these parameters:

- *A1-01 [Access Level]*
- *A1-02 [Control Method]*
- *A1-03 [Init Parameters]*
- *A1-07 [Q2pack Enable]*
- *A2-01 to A2-32 [MAN1 Param1 to MAN3 Param12]*

To lock parameter settings after making changes without changing the password, enter the incorrect password in *A1-04* and push ⏎.

Enter the Password to Unlock Parameters

Use this procedure to unlock parameter settings.

Set the password in *A1-05 [Password Setting]*, and show the Parameter Setting Mode screen on the keypad.

This procedure verifies the password, and makes sure that the parameter settings are unlocked.

1. Push ∧ or ∨ to select "A: Initialization Parameters", then push ⏎.
2. Push ∧ or ∨ to select *[A1-04]*, then push ⏎.
   You can now change parameter settings.
3. Push > or < to move the digit and enter the password.
4. Push ⏎ to confirm the password.
   The drive unlocks the parameters and automatically shows the Parameters Screen.
5. Push ∧ or ∨ to show *[A1-02]*, then push ⏎.
   The keypad shows the setting value for *[A1-02]*.
6. Push ∧ or ∨ to make sure that you can change the setting value.

Push F1 (Back) until the keypad shows the Parameter Setup Mode screen.

■ A1-05: Password Setting

No. (Hex.)	Name	Description	Default (Range)
A1-05 (0105)	Password Setting	V/f OLV OLV/PM AOLV/PM EZOLV Set the password to lock parameters and prevent changes to parameter settings. Enter the correct password in *A1-04 [Password Input]* to unlock parameters and accept changes.	0000 (0000 - 9999)

This parameter can lock these parameter settings:

- *A1-01 [Access Level]*
- *A1-02 [Control Method]*
- *A1-03 [Init Parameters]*
- *A1-07 [Q2pack Enable]*
- *A2-01 to A2-32 [MAN1 Param1 to MAN3 Param12]*

Note:
- Usually, the keypad will not show *A1-05*. To show and set *A1-05*, show *A1-04 [Password Input]* and then:
  – If LCD keypad is used: Push STOP and ▽ at the same time.
  – If LED keypad is used: Push STOP and △ at the same time.
- After you set *A1-05*, the keypad will not show it again until you enter the correct password in *A1-04*. Make sure that you remember the *A1-05* setting value. If you do not know the *A1-05* setting value, contact the manufacturer or your nearest sales representative.
- When *A1-03 = 2220, 3330 [2-Wire Initialization, 3-Wire Initialization]*, the drive is initialized to *A1-05 = 0000*. Be sure to set the password again when a password is necessary for the application.
- Change the setting value in *A1-05* to change the password. The new setting value becomes the new password.
- When you use the password to unlock and change a parameter, enter a value other than the password in *A1-04* to lock the parameter again with the same password.
- If *A1-04 ≠ A1-05*, Modbus Communication cannot read or write *A1-05*.

■ A1-07: Q2pack Enable

No. (Hex.)	Name	Description	Default (Range)
A1-07 (0128)	Q2pack Enable	V/f OLV **OLV/PM** AOLV/PM EZOLV Sets the drive to operate with Q2pack.	0 (0 - 2)

Q2pack is a simple visual programming tool that lets you connect function blocks to customize the drive and add PLC functions.

Note:
- Q2pack will overwrite drive settings when it uses MFDI/MFDO and MFAI/MFAO. When you use Q2pack to make changes to the drive, the changes will stay after you disable Q2pack.
- For more information about Q2pack, contact your nearest sales representative.

0 : Disable Q2pack

1 : Enable Q2pack

2 : With DI

Set *H1-xx = 9F [MFDI Function Select = Q2pack Disable]*. Deactivate the digital input to enable programs made with Q2pack and activate the terminal to disable the programs.

■ A1-11: Firmware Update Lock

No. (Hex.)	Name	Description	Default (Range)
A1-11 (111D) Expert	Firmware Update Lock	V/f OLV **OLV/PM** AOLV/PM EZOLV Protects the drive firmware. When you enable the protection, you cannot update the drive firmware.	0 (0, 1)

0 : Disabled

Lock is disabled.

1 : Enabled

Lock is enabled.

■ A1-12: Bluetooth ID

No. (Hex.)	Name	Description	Default (Range)
A1-12 (1564)	Bluetooth ID	V/f OLV **OLV/PM** AOLV/PM EZOLV Sets the password necessary to use Bluetooth to control the drive with a smartphone or tablet.	- (0000 - 9999)

◆ A2: MANUAL SELECTION

You can register frequently used parameters and recently changed parameters here to access them quickly. Use Setup Mode to show the saved parameters.

■ A2-01 to A2-32: MAN1 Param1 to MAN3 Param12

No. (Hex.)	Name	Description	Default (Range)
A2-01 to A2-32 (0106 - 0125)	MAN1 Param1 to MAN3 Param12	V/f OLV OLV/PM AOLV/PM EZOLV You can select a maximum of 32 parameters for the drive and save the values to parameters *A2-01 to A2-32*. Use Setup Mode to show the saved parameters. You can immediately access these saved parameters.	Parameters in General-Purpose Setup Mode (Determined by A1-07)

Note:
- You must set *A1-01 = 1 [Access Level = Manual Setup]* to access parameters *A2-01 to A2-32*.
- When *A1-07 = 1 or 2 [Q2pack Enable = Enable Q2pack or With DI]*, the drive saves *qx-xx [q1-01 to q8-40: Q2pack Parameters]* to *A2-01 to A2-32*.

The drive saves these parameters to *A2-01 to A2-32*.

- The drive saves a maximum of 32 parameters.

  Note:
  Set *A1-01 = 2 [Standard Parameters]* or *A1-01 = 3 [Expert Parameters]* to save the necessary parameters.
- The drive automatically saves changed parameters to *A2-17 to A2-32*.

  Note:
  Set *A2-33 = 1 [Manual Autoset Parameters = Auto Save]*.

■ A2-33: Manual Autoset Parameters

No. (Hex.)	Name	Description	Default (Range)
A2-33 (0126)	Manual Autoset Parameters	V/f OLV OLV/PM AOLV/PM EZOLV Sets the automatic save feature for changes to parameters *A2-17 to A2-32 [MAN2 Param7 to MAN3 Param12]*.	0 (0, 1)

0 : Manual Entry

Set User Parameters manually.

1 : Auto Save

The drive automatically registers changed parameter *A2-17 to A2-32*. The drive automatically saves the most recently changed parameter to *A2-17*, and saves a maximum of 16 parameters. After the drive registers 16 parameters, when you save a new parameter, the drive will remove a parameter from the User Parameter list to make space for the new parameter. The drive removes parameters with First In, First Out.

Use Setup Mode to show the saved parameters.

Note:
In General-Purpose Setup Mode, the drive saves parameters starting with *A2-27* because the drive saves parameters *A2-26* and lower by default.

◆ Notes for Elevator Applications

When using the drive for elevator applications, read the safety descriptions and precautions, and safely and correctly use the device.

■ Conditions to Open and Close the Brake

Set *L4-07 = 1 [SpAgree Det.Selection = No Detect@BB]* to open and close the holding brake.

When *L4-07 = 2 [Always Detect]*, the output frequency increases when you input the Run command although the external baseblock command is input. Because of this, speed detection operates and will open the brake signal.

- Set Related Parameters
  This table shows examples of parameter settings to use the terminal DO2-O2C as the holding brake open and close signal.

Table 12.3 Holding Brake Open and Close Signal Setting Example

Brake Open and Close Signal		Brake Open and Close Level Adjust		Applicable Control Methods (A1-02 Settings)	
Signal Name	Parameter Settings	Signal Name	Parameter Settings	V/f Control (0)	OLVector (2)
Frequency (FOUT) Detection 2	L4-07 = 0	SpAgree Det.Level	L4-01 = 1.0 Hz to 3.0 Hz *1	x	x
	H2-03 = 5	SpAgree Det.Width	L4-02 = 0.0 Hz to 0.5 Hz		

*1 When *A1-02 = 2 [OLVector]*, it is the usual setting range. When *A1-02 = 0 [V/f Control]*, set *L4-01* to the rated slip frequency of the motor + approximately 0.5 Hz. If you set the value too low, motor torque will not be sufficient and it will cause motor rollback. Set the parameter to agree with these conditions at the same time. If you set the value too high, it will cause overshoot at start.

- *L4-01 > E1-09 [Min Output Frequency]*
- *L4-01 > L4-02 [Powloss Ramp Time@recovery]*

*2 Use *L4-02* to adjust the detection width of Frequency Detection 2. If rollback occurs when the motor stops, change the frequency to approximately 0.1 Hz.

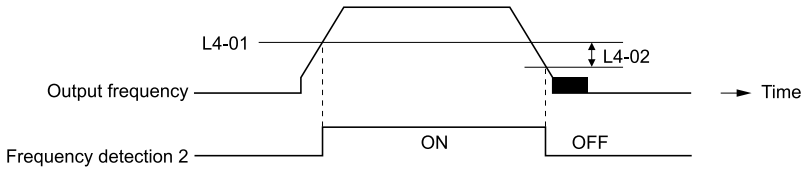

Figure 12.1 Frequency Detection 2

■ Sequence Circuit Configuration

Use these conditions to set the circuit for the open/close sequence of the holding brake:

- Set the sequence-side operation conditions to activate terminal DO2-O2C and open the holding brake.
- Set the sequence to close the holding brake in an emergency if the drive detects a fault.
- Set the sequence to open the holding brake when you enter an increase or decrease command.

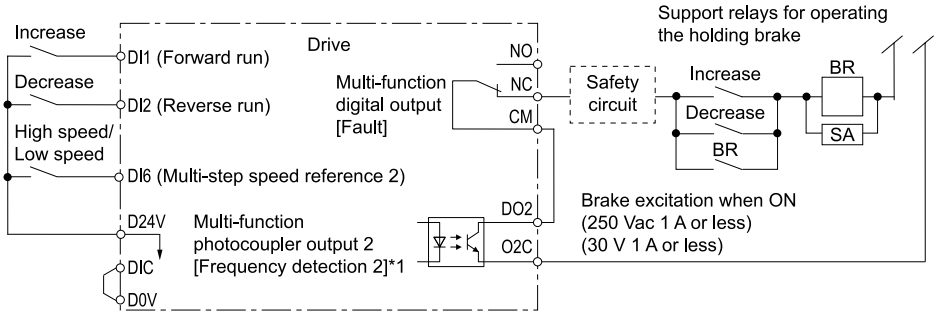

Figure 12.2 Sequence Circuit Configuration Diagram

*1 *L4-07 = 1 [SpAgree Det.Selection = No Detect@BB]*

■ Time Chart

This figure shows the open and close sequence of the holding brake.

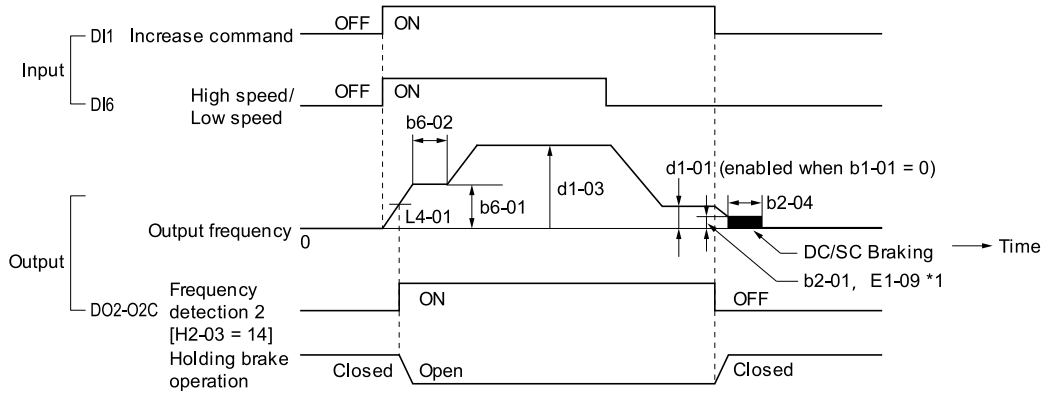

Figure 12.3 Holding Brake Open and Close Sequence Time Chart (V/f, OLV)

*1 Start braking from the higher set frequency between *b2-01 [ZSpd/DCI Threshold]* or *E1-09 [Min Output Frequency]*.

■ Notes on when Using Other Functions

Functions	Notes
Stall Prevention during Deceleration	When you connect a braking resistor to discharge the regenerative power to the drive, set *L3-04 = 0 [StallP@Decel Enable = Disabled]*. **Note:** If *L3-04 = 1 [Enabled]*, it is possible that the drive will not stop in the set deceleration time. Do not change the default settings of these related parameters: • *L3-01 = 2 [StallP Mode@Accel = General Purpose]* • *L3-05 = 1 [StallP@RUN Enable = Enabled]*
Auto-Tuning for Induction Motors	• When *A1-02 = 2 [Control Method = OLVector]*, Auto-Tune the motor before you operate the drive. • Disconnect the drive from the motor to do Rotational Auto-Tuning. • Auto-Tuning runs automatically for approximately 1 minute. Do not do Auto-Tuning with the motor engaged in the elevator system. **Note:** • If you cannot disconnect the motor from the machine, do Stationary Auto-Tuning. During this time, the drive automatically measures the necessary motor data. If the motor test report or the motor nameplate is not available, use Stationary Auto-Tuning. Do Stationary Auto-Tuning for Line-to-Line Resistance for better torque characteristics at low speeds in the V/f Control mode. • When you do Stationary Auto-Tuning, the drive energizes the motor and the motor stays stopped. • To Auto-Tune a specialized motor, for example a wound motor, prepare a motor test report before Auto-Tuning and make sure that the motor parameter *E2-xx* is not too different than the value in the test report.
Auto-Tuning for PM Motors	You must set the motor data in the drive to run a PM motor. • When you use a Yaskawa PM motor Input the motor code in *E5-01*. *E5* and other related motor parameters will be automatically set to the optimal values. • When you use a non-Yaskawa PM motor Do Auto-Tuning. – When the motor nameplate or motor test report is available, enter the PM motor parameters directly with PM Motor Parameter Settings. – If the motor nameplate or motor test report is not available, and the motor cannot rotate, do PM Stationary Auto-Tuning. – If the motor nameplate or motor test report is not available, and the motor can rotate, do PM Rotational Auto-Tuning.
Braking Resistor Overheat Protection	When you use a braking resistor that is not the optional Yaskawa braking resistor unit (LKEB-series), this function uses the thermal overload relay to detect braking resistor overheat. Load a sequence program that turns OFF the drive input power supply when the braking resistor overheats. **Note:** Refer to 42 when you load the sequence circuit.
Continuous Operation	Do not use the momentary power loss continuous operation function and the Auto Restart function. If you use these functions, there is a risk that the motor will coast to a stop if the brake is open when there is a momentary power loss and the drive is operating or if there is a fault. Set the these parameters: • *L2-01 = 0 [RideThru@PwrLoss = Disabled]* • *L5-01 = 0 [Auto-Reset Attempts = 0]*
Torque Limit	The motor rated torque sets the value for *L7-01 to L7-04 [FW Torque Limit to RV Reg. TrqLimit]*. If there will not be sufficient torque during start up, replace the drive with a larger capacity drive and set the torque limit between 200% and 300%. The *L7-01 to L7-04* default setting is 200%.
Input/Output Phase Loss Protection, Overtorque Detection	To stop a fall because of phase loss, set these parameters: • *L8-05 = 1 [In PhaseLoss Selection = Enabled]* • *L8-07 = 1 [Out PhaseLoss Selection = 1PH Loss Det]* • *L6-01, L6-04 = 1 to 8 [Torque Detection Selection 1/2 = oL @ Speed Agree - Alarm only to UL @ RUN - Fault]* • *L6-02, L6-05 [Trq Det1 Level, Trq Det2 Level]* • *L6-03, L6-06 [Trq Det1 Time, Trq Det2 Time]* **Note:** Use precautions, for example fall detection, on the machine side.
External Baseblock Command	• If you enter the external baseblock signal set in *H1-01 to H1-07 = 1A or 1B [DI1 Function Selection to DI7 Function Selection = Baseblock Command]* during run, the motor immediately coasts to stop. When you enter a baseblock command while the motor is operating, make sure that it is necessary. • When you use an external baseblock command for the fast stop and operation start up interlocks, load the sequence to lock the holding brake when you enter the external baseblock command. • If you enter the external baseblock command and then immediately remove it, the drive will not output the voltage in the time set in *L2-03 [Min Baseblck Time]*. Do not use an external baseblock command for applications that have frequent Run/Stop commands.
Acceleration and Deceleration Times	If you set the acceleration and deceleration times for the drive side too short and you do not add the mechanical operation delay time of the holding brake, the holding brake could operate late, or there could be overcurrent at start up, the brake could grind, or the motor could roll back when it stops. In these conditions, use Dwell Reference at Start/Time and DC Injection Braking at Stop to adjust the holding brake timing.
Electromagnetic Contactor on the Drive Output Side	Usually you must not install the electromagnetic contactor between the drive and motor. When you must install an electromagnetic contactor to use one drive to switchover more than one motor, follow these precautions: • Load a sequence that opens and closes the electromagnetic contactor when these two conditions are satisfied at the same time, unless there is an emergency: – The holding brake is fully closed – The drive terminals set for *H2-xx = 1A or 1B [MFDO Function Select = During Baseblock]* are activated • If you open and close the electromagnetic contactor during motor control or during DC Injection Braking (or zero speed control), the surge voltage and the motor direct input current can cause the drive to detect faults. • When you use an electromagnetic contactor between the drive and motor, set *L8-07 = 1 or 2 [Out PhaseLoss Selection = 1PH Loss Det, or 2/3PH Loss Det]*.

■ Adjustments Relating to Control

When there is oscillation, rollback, or other control problems, adjust the parameters as specified by the control method.

V/f Control on page 440 shows only the frequently adjusted parameters.

Note:

Torque and speed response for high-resistance and high-slip motors are slow. Adjust the torque and speed response to increase them. Low impedance (low-slip) motors will hunt and oscillate. Adjust the torque and speed response to increase them.

■ V/f Control

When you use V/f Control, do not use *C3-01 [Slip Comp Gain]*.

Table 12.4 Adjustment of Drive Control (V/f Control)

Adjustment Description	Parameter Number	Possible Solutions	Default	Recommended Setting
Prevent hunting and oscillation at middle-range speeds (10 Hz to 40 Hz)	n1-02 [HuntPrev Gain Setting]	• If the torque is not sufficient with heavy loads, decrease the setting. • If there is hunting or oscillation with light loads, increase the setting. Set *n1-01 = 1 [HuntPrev Selection = Enabled]*.	1.00	0.50 - 2.00
• Increasing motor excitation sound • Hunting and oscillation suppression at low speeds and middle-range speeds	C6-02 [Carrier Frequency Selection]	• If there is a loud motor excitation sound, increase the setting value. • If there is hunting or oscillation at low speeds or middle-range speeds, decrease the setting value.	*1	1 - F
• Increase torque at low speeds (10 Hz or lower) • Prevent hunting and oscillation	C4-01 [Trq Comp Gain]	• If the torque is not sufficient at low speeds, increase the setting value. • If there is hunting or oscillation with light loads, decrease the setting value.	1.00	0.50 - 1.50
• Increase torque at low speeds • Prevent shock during start up	E1-08 [Mid A Voltage]	• If the torque is not sufficient at low speeds, increase the setting value. • If there is a large shock during start up, decrease the setting value.	15.0 V *2 *3	13.0 V to 16.0 V *3
	E1-10 [Min Output Voltage]		9.0 V *2 *3	7.0 V to 10.0 V *3

*1 The default setting changes when the settings for *C6-01 [ND/HD Duty Selection]* and *o2-04 [Drive KVA Selection]* change.
*2 The default setting changes when the settings for *A1-02 [Control Method]* and *E1-03 [V/f Pattern Selection]* change.
*3 This is the setting for 200 V class drives. Multiply the voltage by 2 for 400 V class drives.

■ Open Loop Vector Control Method

Do not adjust parameter *C4-01 [Trq Comp Gain]*. Keep this parameter at its default setting.

If you cannot get speed accuracy during regeneration, set *C3-04 = 1 [Slip Comp@Regen = Enable>6 Hz]*. If you cannot get speed accuracy at high speeds, set *C3-05 = 1 [Vout Limit Selection = Enabled]*.

Table 12.5 Adjustment of Drive Control (Open Loop Vector Control Method)

Adjustment description	Parameter Number	Possible Solutions	Default	Recommended Setting
• Torque, increase speed response • Prevent hunting and oscillation at middle-range speeds (10 Hz to 40 Hz)	n2-01 [AFR Gain]	• If torque and speed response are slow, decrease the setting value. • If there is hunting or oscillation, increase the setting value.	1.00	0.50 - 2.00
• Torque, increase speed response • Prevent hunting and oscillation	C4-02 [Trq Comp Delay Time] *1	• If torque and speed response are slow, decrease the setting value. • If there is hunting or oscillation, increase the setting value.	20 ms	20 ms to 100 ms
• Increase speed response • Increase speed stability	C3-02 [Slip Comp Delay Time]	• When speed response is slow, decrease the setting value. • If speed is not stable, increase the setting value.	200 ms	100 ms to 500 ms
• Improve speed accuracy	C3-01 [Slip Comp Gain]	• If speed is too slow, increase the setting value. • If speed is too fast, decrease the setting value.	1.0	0.5 - 1.5
• Increasing motor excitation sound • Prevent hunting and oscillation at low-range speeds (10 Hz to or lower)	C6-02 [Carrier Frequency Selection]	• If there is a loud motor excitation sound, increase the setting value. • If there is hunting or oscillation at low speeds, decrease the setting value.	*2	1 - F
• Increase torque and speed response at low speeds • Prevent shock during start up	E1-08 [Mid A Voltage]	• If the torque and speed response are slow, increase the setting value. • If there is a large shock during start up, decrease the setting value.	11.0 V *3	12.0 V to 13.0 V *3
	E1-10 [Min Output Voltage]		2.0 V *3	2.0 V to 3.0 V *3

*1 If the value for *C4-02 [Trq Comp Delay Time]* is high, the current can increase during start up. Adjust and check the current during start up.

*2 The default setting changes when the settings for *C6-01 [ND/HD Duty Selection]* and *o2-04 [Drive KVA Selection]* change.
*3 This is the setting for 200 V class drives. Multiply the voltage by 2 for 400 V class drives.

■ Elevator Start/Stop and Accel/Decel Time Shock Reduction

Shock when you start and stop the elevator and when you accelerate and decelerate is an issue for passenger elevator applications. If shock has an effect on the quality of the ride, adjust these parameters:

■ S-Curve Characteristics, Accel & Decel Time

Adjustment Parameter	Name
C1-01, C1-03, C1-05, C1-07	Accel Time 1 to Accel Time 4
C1-02, C1-04, C1-06, C1-08	Decel Time 1 to Decel Time 4
C2-01	Jerk@Start of Accel
C2-02	Jerk@End of Accel
C2-03	Jerk@Start of Decel
C2-04	Jerk@End of Decel

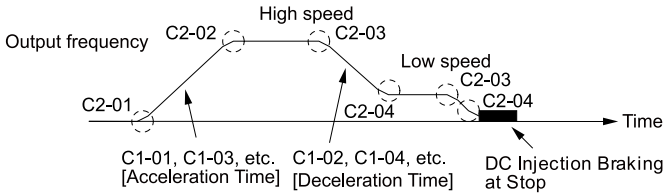

Figure 12.4 S-curve Characteristics, Accel & Decel Time

Note:
- When decreased operation times are necessary for the application, for example with cranes and hoists, do not use S-curve characteristic times.
- The default setting for *C2-04 [Jerk@End of Decel]* will be 0.00 seconds. The default setting for other S-curve characteristics will be 0.20 seconds. Set the acceleration/deceleration times and S-curve characteristic time correctly for acceleration/deceleration start up and end. The recommended setting of the S-curve characteristics time is 0.2 to 1.0 seconds.
- When you use the *C1-11 [Ac/Dec Switch Frequency]*, you can switch the acceleration/deceleration rate automatically during acceleration/deceleration. The default setting is disabled.
  When the *Output Frequency* ≥ *C1-11*, operate at the acceleration and deceleration times set in *C1-01* and *C1-02*
  When the *Output Frequency* < *C1-11*, operate at the acceleration and deceleration times set in *C1-07* and *C1-08*
- During low speed operation, if the *Output Frequency* < *E1-09 [Min Output Frequency]* in the S-Curve Time @ Start of Decel, the drive will cancel the S-curve characteristics and do DC Inject Braking at Stop.

■ Dwell Function at Start

Adjustment Parameter	Name
b6-01	Dwell Ref.@Start
b6-02	Dwell Time@Start
H2-xx = 14	FreqDetect 2

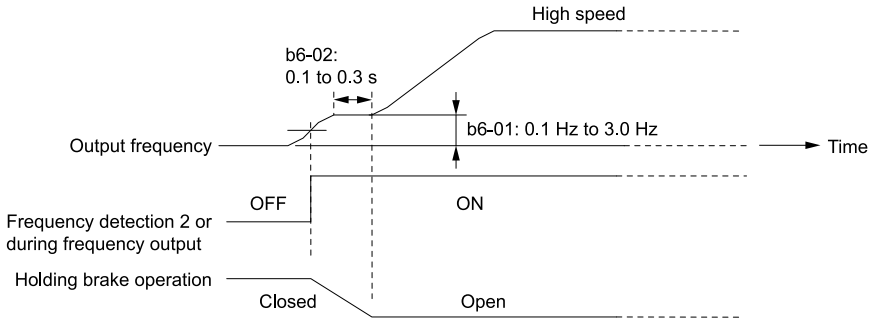

Figure 12.5 Dwell Function at Start

Note:
- If the mechanical operation of the holding brake is slow, use the Dwell Function at Start to prevent brake grinding (friction). Accelerate after the brake is fully open.
- When you use V/f Control or Open Loop Vector Control, set *b6-01 [Dwell Ref.@Start] > Frequency Detection 2 (brake open frequency)*.
- If the motor torque is not sufficient during start up, use the DC Inject Braking function to secure the motor current (torque) before you start the motor.
  – *b2-02 [DCI Braking Current]* recommended setting: 50% to 75% (V/f Control, Open Loop Vector Control)
  – *b2-03 [DCInj Time@Start]* recommended setting: 0.2 s to 0.5 s

■ DC Injection Braking at Stop Function

Note:

If you disconnect a drive from a motor when it is controlling the motor or during DC Injection Braking (Zero speed level), a voltage surge can trigger a drive fault. When you use an electromagnetic contactor between the drive and motor, set *L8-07 = 1 or 2 [Out PhaseLoss Selection = 1PH Loss Det, or 2/3PH Loss Det]*. If it necessary to disconnect the motor and drive when you stop the elevator, fully close the holding brake and disconnect the drive while the Baseblock signal is ON. This does not apply for emergency conditions.

Adjustment Parameter	Name
b2-01	ZSpd/DCI Threshold
b2-02	DCI Braking Current
b2-04	DCInj Time@Stop
H2-xx = 5	FreqDetect 2

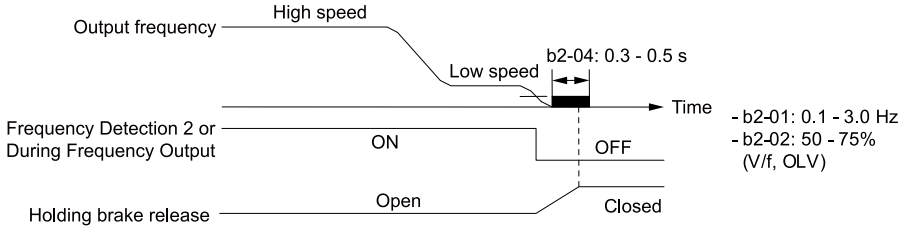

Figure 12.6 DC Injection Braking at Stop Function

Note:
- If the mechanical operation of the holding brake is slow, use DC Injection Braking until the brake is fully closed to prevent rollback.
- If you cannot hold the load with DC Injection Braking when it is stopped in V/f Control and Open Loop Vector Control modes, use Dwell Function at Stop.
  – *b6-03 [Dwell Ref@Stop]*: Minimum output frequency to 3.0 Hz
  When Frequency Detection 2 is OFF, it is less than *L4-01 [SpAgree Det.Level] - L4-02 [SpAgree Det.Width]*.
  – *b6-04 [Dwell Time@Stop]* recommended setting: 0.3 s to 0.5 s
  – *b2-04 [DCInj Time@Stop]* recommended setting: 0.0 s

■ Analog Input FilterTime Constant

When *b1-01 = 1 [Freq. Ref. Sel. 1 = Analog Input]*, it adds noise to the analog frequency reference during run.

- Minimize the effects of noise.
- Change *H3-13 [An.In FilterTime Constant]* to a range of 0.01 s to 0.10 s.

■ Startup Current Check

When you do a test run, set *L8-41 =1 [HCA alarm Selection = Enabled]* and use *U4-13 [Peak Hold Current]* and a clamp ammeter with the machine under load and not under load to check the motor current during start up.

If the motor torque is not sufficient during start up or if the timing between the motor and the holding brake is unsatisfactory and causes the motor to lock, a large quantity of current will flow. In these conditions, adjust the parameters again and decrease the load to decrease the current to less than 150%. If the current flow is more than 150% of the drive rated current, the heat stress on the IGBTs will decrease the service life of drive parts.

To decrease the effects of heat stress, decrease the carrier frequency of the drive to 2.0 kHz to 2.5 kHz for applications where low audible noise is not necessary.

■ Overvoltage Suppression Function

If the overvoltage suppression function is used in elevator type applications, there is a risk of rollback and falls. Set *L3-11 = 0 [Overvolt Supression Select = Disabled]*.

The overvoltage suppression function is designed to prevent an overvoltage trip in a situation in which a braking resistor is not used with a regenerative load. If the overvoltage suppression function is enabled, the regeneration torque reference within the drive is automatically controlled during regeneration.

Note:

When using the drive for applications such as high speed elevators with a speed of 2 ms or more and direct drive elevators, or when you need drives designed for cranes, contact the manufacturer or your sales representative.

12.2 b: APPLICATION

b parameters set these functions:

- Frequency reference source/Run command source
- Stopping method settings
- DC Injection Braking
- Speed Search
- Timer Function
- PID control
- Dwell function
- Energy-Saving Control

◆ b1: OPERATION MODE SELECT

b1 parameters set the operation mode for the drive.

■ b1-01: Freq. Ref. Sel. 1

No. (Hex.)	Name	Description	Default (Setting Range)
b1-01 (0180)	Freq. Ref. Sel. 1	V/f OLV OLV/PM AOLV/PM EZOLV Sets the input method for the frequency reference.	1 (0 - 4)

Note:

- Push LO/RE on the keypad to set the input mode to LOCAL and use the keypad to enter the frequency reference.
- If the frequency reference is 0 Hz or less than the value set in *E1-09 [Min Output Frequency]* and the drive receives the Run command, the RUN LED on the keypad will flash. Examine the setting for the frequency reference input and enter a value ≥ E1-09.

0 : Keypad

Use the keypad to enter the frequency reference.

Use ∧ and ∨ on the keypad to change the frequency reference.

1 : Analog Input

Use MFAI terminals AI1 and AI2 to input an analog frequency reference with a voltage or current input signal.

- Voltage Input
  Refer to Table 12.6 to use a voltage signal input to one of the MFAI terminals.

Table 12.6 Frequency Reference Voltage Input

Terminal	Terminal Signal Level	Parameter Settings				Note
		Signal Level Selection	Function Selection	Gain	Bias	
AI1	0 - 10 V (Lower Limit at 0)	H3-01 = 0	H3-02 = 4 [Freq Ref/BIAS]	H3-03	H3-04	-
	0 - 10 V (Bipolar Reference)	H3-01 = 1				
AI2	0 - 10 V (Lower Limit at 0)	H3-01 = 0	H3-10 = 4 [Freq Ref/BIAS]	H3-11	H3-12	Set DIP switch S1 to “V” for voltage input.
	0 - 10 V (Bipolar Reference)	H3-01 = 1				

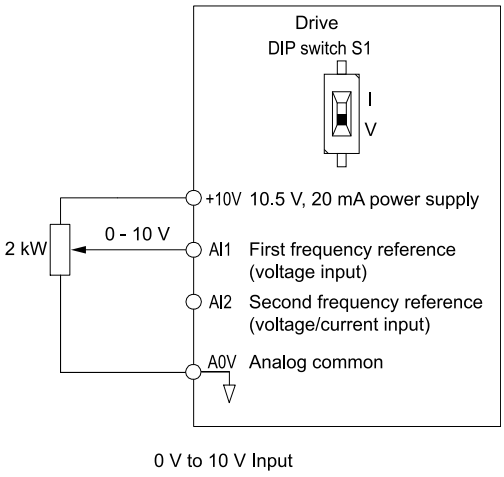

Figure 12.7 Example of Setting the Frequency Reference with a Voltage Signal to Terminal AI1

Note:
You can also use this diagram to wire terminal AI2.

- Current Input
  Refer to Table 12.7 to use a current signal input to one of the MFAI terminals.

Table 12.7 Frequency Reference Current Input

Terminal	Signal Level	Parameter Settings				Note
		Signal Level Selection	Function Selection	Gain	Bias	
A2	4 - 20 mA	H3-09 = 2	H3-10 = 4 [Freq Ref/BIAS]	H3-11	H3-12	Set DIP switch S1 to "I" for current input.
	0 - 20 mA	H3-09 = 3				

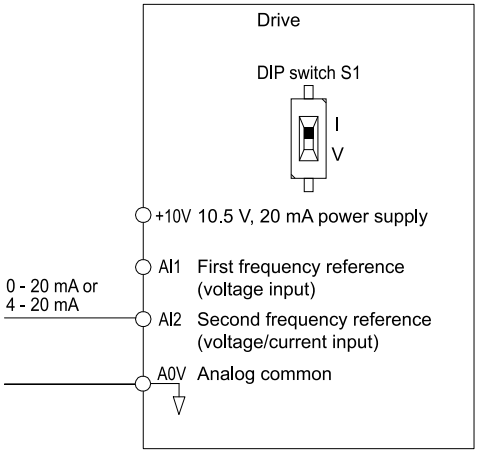

Figure 12.8 Example of Setting the Frequency Reference with a Current Signal to Terminal AI2

Changing between Master and Auxiliary Frequency References

Use the multi-step speed reference function to change the frequency reference input between terminals AI1 and AI2.

2 : Modbus

Use Modbus communications to enter the frequency reference.

3 : Option PCB

Use a communications option connected to the drive to enter the Run command.

Refer to the instruction manual included with the option to install and set the option.

Note:
If *b1-01 = 3* but you did not connect an option, *oPE05 [Run Cmd/Freq Ref Source Sel Err]* will flash on the keypad.

4 : Pulse Train Input

Use a pulse train signal from the pulse train input terminal PI to enter the frequency reference.

Do this procedure to make sure that the pulse train signal is operating correctly.

1. Set *b1-01 = 4*, *H6-01 = 0 [PI Pulse Train Function = Freq Ref]*.

2. Set *H6-02 [PI Frequency Scale]* to the number of pulses that determine 100% of the frequency reference.
3. Enter a pulse train signal on the terminal PI and make sure that the keypad shows a correct frequency reference.

■ b1-02: Run Comm. Sel 1

No. (Hex.)	Name	Description	Default (Range)
b1-02 (0181)	Run Comm. Sel 1	V/f OLV OLV/PM AOLV/PM EZOLV Sets the input method for the Run command.	1 (0 - 3)

0 : Keypad

Use the keypad to enter the Run command.

You can use the JOG operation or the FWD/REV commands from the keypad.

Note:

The LORE on the keypad is on while keypad is the Run command source.

1 : Digital Input

Use the control circuit terminals to enter the Run command. Select the input method for the Run command with an *H1-xx* parameter.

Set *H1-xx = 1 to 5 [Forward Run to 3-Wire Seq.]*. The default setting is 2-wire sequence 1.

- 2-wire Sequence 1
  This sequence has two input types: FWD/Stop and REV/Stop. Set *A1-03 = 2220 [Init Parameters = 2-Wire Initialization]* to initialize the drive and set terminals DI1 and DI2 for a 2-wire sequence.
- 2-wire Sequence 2
  This sequence has two input types: Run/Stop and FWD/REV.
- 3-Wire Sequence (3-Wire Seq.)
  This sequence has three input types: Run, Stop, and FWD/REV. Set *A1-03 = 3330 [Init Parameters = 3-Wire Initialization]* to initialize the drive and set terminals DI1, DI2, and DI5 for a 3-wire sequence.

2 : Modbus

Use Modbus communications to enter the Run command.

3 : Option PCB

Use a communications option card or input option card connected to the drive to enter the Run command.

Refer to the instruction manual included with the option card to install and set the option card.

Note:

If *b1-02 = 3* but no connected option card, then *oPE05 [Run Cmd/Freq Ref Source Sel Err]* will flash on the keypad.

■ b1-03: Stopping Method Selection

No. (Hex.)	Name	Description	Default (Range)
b1-03 (0182)	Stopping Method Selection	V/f OLV OLV/PM AOLV/PM EZOLV Sets the method to stop the motor after removing a Run command or entering a Stop command.	0 (0 - 3, 9)

Note:

When *A1-02 = 5, 6, 8 [Control Method = PM OLVector, PM AOLVector, EZ Vector]*, the setting range is 0, 1, 3.

Select the applicable stopping method for the application from these four options:

0 : Ramp->Stop

When you enter the Stop command or turn OFF the Run command, the drive ramps the motor to stop.

The drive ramps the motor to stop as specified by the deceleration time. The default setting for the deceleration time is *C1-02 [Decel Time 1]*. The actual deceleration time changes as the load conditions change (for example, mechanical loss and inertia).

If the output frequency is less than or equal to the value set in *b2-01 [ZSpd/DCI Threshold]* during deceleration, the drive will do DC Injection Braking, Zero Speed Control, or Short Circuit Braking, as specified by the control method.

- **Ramp to Stop with V/f Control and OLV Control Methods**
  Parameter *b2-01* sets the frequency to start DC Injection Braking at stop. If the output frequency is less than or equal to the value set in *b2-01* during deceleration, then the drive will perform DC Injection Braking for the time set in *b2-04 [DCInj Time@Stop]*.

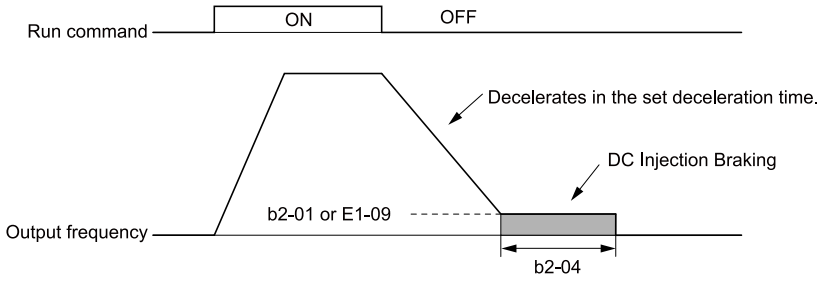

Figure 12.9 Ramp to Stop with V/f and OLV Control Methods

Note:
When *b2-01 ≤ E1-09 [Min Output Frequency]*, the drive will start DC Injection Braking from the frequency set in *E1-09*.

- **Ramp to Stop with OLV/PM, AOLV/PM, and EZOLV Control Methods**
  Parameter *b2-01* sets the frequency to start Short Circuit Braking. When the output frequency is less than or equal to the value set in *b2-01* during deceleration, then the drive will do Short Circuit Braking for the time set in *b2-13 [SCB Time@Stop]*. When *b2-04 ≠ 0*, the drive will do DC Injection Braking for the time set in *b2-04* when Short Circuit Braking is complete.

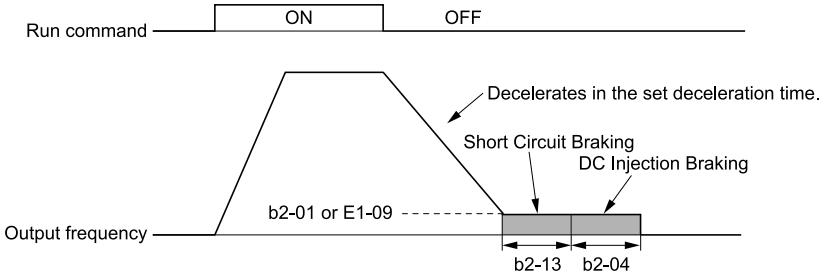

Figure 12.10 Ramp to Stop with OLV/PM, AOLV/PM, and EZOLV Control Methods

Note:
When *b2-01 ≤ E1-09*, the drive will start Short Circuit Braking from the frequency set in *E1-09*.
If *b2-01 = 0 Hz* and *E1-09 = 0 Hz*, the drive will not do Short Circuit Braking.

1 : Coast->Stop

When you enter the Stop command or turn OFF the Run command, the drive turns OFF the output and coasts the motor to stop.

Load conditions will have an effect on the deceleration rate as the motor coasts to stop (for example, mechanical loss and inertia).

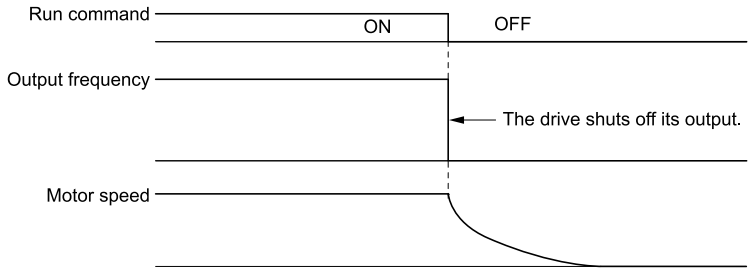

Figure 12.11 Coast to Stop

Note:
When you enter the Stop command or turn OFF the Run command, the drive ignores the Run command for the time set in *L2-03 [Min Baseblck Time]*. Do not enter the Run command until the motor comes to a complete stop. Use DC Injection or Speed Search to restart the motor before it stops.

2 : DC Inj->Stop

When you enter the Stop command or turn OFF the Run command, the drive turns OFF the output for the time set in *L2-03*. The drive waits for the minimum baseblock time and then injects the amount of DC current into the motor set in *b2-02 [DCI Braking Current]* to stop the motor with DC current.

DC Injection Braking stops the motor more quickly than coast to stop.

Note:
If *A1-02 = 5, 6*, DC Injection Braking to Stop is not available.

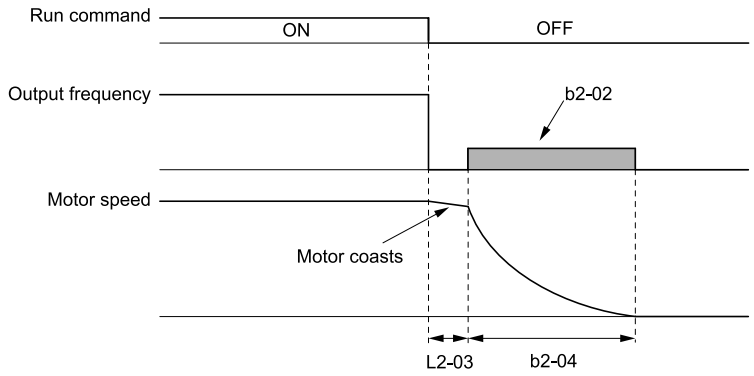

Figure 12.12 DC Injection Braking to Stop

The value set in *b2-04* and the output frequency when the drive receives the Stop command determine the DC Injection Braking time. The drive calculates the DC Injection Braking time as in Figure 12.13.

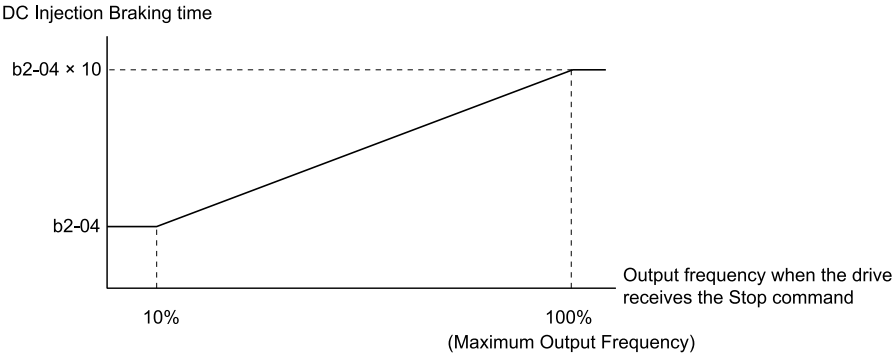

$$\text{DC Injection Braking time} = \frac{(\text{b2-04}) \times 10 \times \text{Output frequency}}{\text{Maximum Output Frequency (E1-04)}}$$

Figure 12.13 DC Injection Braking Time and Output Frequency

Note:

Set *L2-03* to a high value that will not trigger *oC [Overcurrent]* when the drive uses DC Injection Braking to stop the motor.

3 : Timed Coast->Stop

Enter the Stop command or turn OFF the Run command and turn OFF drive output and coast the motor to stop. The drive ignores the Run command until the “Run wait time *t*” is expired.

To start the drive again, wait until the the “Run wait time *t*” is expired then enter the Run command.

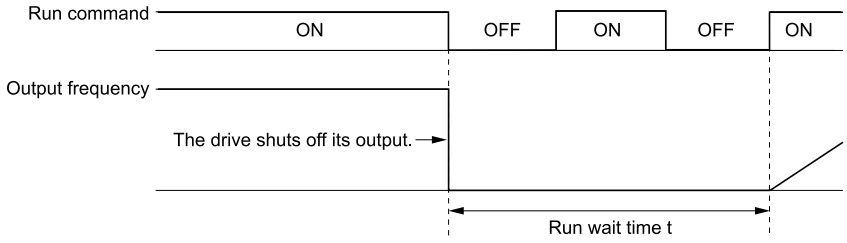

Figure 12.14 Coast to Stop with Timer

The active deceleration time and the output frequency when drive receives the Stop command determine the length of “Run wait time *t*”.

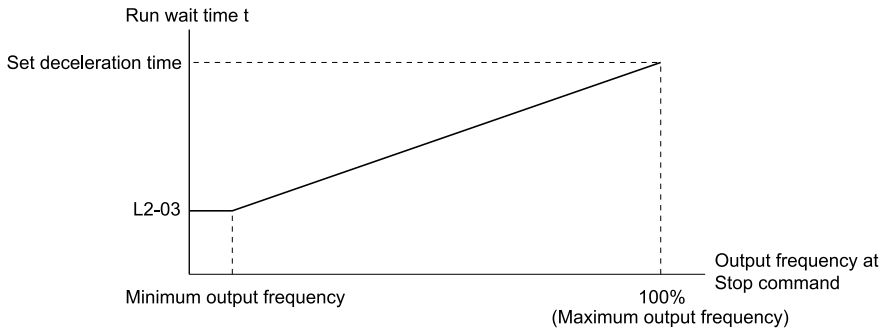

Figure 12.15 Run Wait Time and Output Frequency

9 : Distance Stop

Enter the Stop command or turn OFF the Run command for the drive to always decelerate for the same distance. The drive uses the active deceleration time and the value set in *E1-04 [Max Output Frequency]* to calculate stopping distance S1. The drive holds its current speed when stopping from a frequency less than the maximum speed. When the distance covered is equal to S1 minus S2, the drive ramps to stop in the current deceleration time. Adjust the stopping precision with *d4-12 [Stop Position Gain]*.

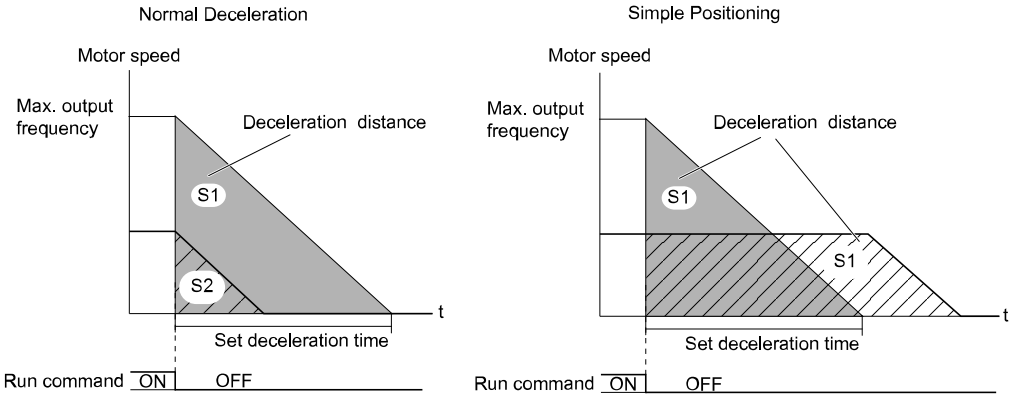

Figure 12.16 Deceleration When Set for Stop in Position

Note:

Note these points when setting Stop in Position.

- The drive uses the deceleration time that was active when the drive received the Stop command or when the Run command was turned OFF to calculate the stop time. If you change the deceleration time during deceleration, the positioning will not be accurate.
- Set *b6-03 = 0.0 [Dwell Ref@Stop = 0.0]*, *b6-04 = 0.0 [Dwell Time@Stop = 0.0 s]*.
- The KEB Ride-Thru function is not available. Set *H1-xx ≠ 40, 41, 42, 43 [MFDI Function Selection = KEB Thru1 NC, KEB Thru1 NO, KEB Thru2 NC, KEB Thru2 NO]*.
- Set *L3-04 = 0 [StallP@Decel Enable = Disabled]*. A dynamic braking option can be necessary for regenerative loads.
- Set *L3-11 = 0 [Overvolt Supression Select = Disabled]*.
- The High Slip Braking function is not available. Set *H1-xx ≠ 32 [MFDI Function Selection ≠ HiSlipBraking]*.
- Set *C2-03, C2-04 = 0.00 [Jerk@Start of Decel, Jerk@End of Decel = 0.00 s]*.

■ b1-04: Reverse Operation Selection

No. (Hex.)	Name	Description	Default (Range)
b1-04 (0183)	Reverse Operation Selection	V/f OLV OLV/PM AOLV/PM EZOLV Sets the reverse operation function. Disable reverse operation in fan or pump applications where reverse rotation is dangerous.	0 (0, 1)

When reverse operation is prohibited, the drive will not accept a Reverse operation command.

0 : Enabled

The drive will accept a Reverse operation command.

1 : Disabled

The drive will not accept a Reverse operation command.

■ b1-06: Double Scan DI Inputs Select

No. (Hex.)	Name	Description	Default (Range)
b1-06 (0185)	Double Scan DI Inputs Select	V/f OLV OLV/PM AOLV/PM EZOLV Sets the number of times that the drive reads the sequence input command to prevent malfunction because of noise.	2 (1, 2)

1 : Single Scan

The drive reads the terminal status one time. The drive immediately reads all changes to the terminal status.

This setting lets the drive quickly respond to changes in the sequence, but noise can cause malfunction.

2 : Double Scan

The drive reads the terminal status two times. The drive reads all changes to the terminal status two times to make sure that the reading is the same.

The drive responds slower than when it reads the sequence one time, but this setting prevents malfunction because of noise.

■ b1-07: LO/RE Run Selection

No. (Hex.)	Name	Description	Default (Range)
b1-07 (0186)	LO/RE Run Selection	V/f OLV OLV/PM AOLV/PM EZOLV Sets drive response to an existing Run command when the drive receives a second Run command from a different location.	1 (1, 2)

This parameter interlocks the drive to help prevent accidents that can occur if the motor starts to rotate because the Run command source changed.

To switch the RUN command source, push LO/RE on the keypad or set *H1-xx = 11, 9 [MFDI Function Select = LOC/REM Sel., Ext Ref 1/2]* and activate/deactivate the terminal.

1 : Cycle RUN

If a Run command is enabled when you switch between Run command sources, the drive will not operate the motor.

When the drive is operating the motor, turn OFF the Run command to stop the motor. Enter the Run command again to start operation.

2 : Accept RUN

If a Run command is enabled when you switch between Run command sources, the drive will start to operate the motor or continue to operate the motor.

WARNING! *Sudden Movement Hazard. When you use a 3-Wire sequence, set A1-03 = 3330 [Init Parameters = 3-Wire Initialization] and make sure that b1-17 = 1 [RUN@PowerUp Selection = Disregard RUN] (default). If you do not correctly set the drive parameters for 3-Wire operation before you energize the drive, the motor can suddenly rotate in reverse when you energize the drive.*

■ b1-08: RUN@PRG Mode Selection

No. (Hex.)	Name	Description	Default (Range)
b1-08 (0187)	RUN@PRG Mode Selection	V/f OLV OLV/PM AOLV/PM EZOLV Sets the conditions for the drive to accept a Run command entered from an external source when using the keypad to set parameters.	1 (1 - 3)

As a safety precaution, when the drive is in Programming Mode, it will not respond to a Run command.

This parameter helps prevent accidents that can occur if the motor starts to rotate because the drive received a Run command from an external source while the user is programming the drive. You can also set the drive to not show the Programming Mode when a Run command is active.

1 : NoRUN@Program

The drive rejects the Run command while in Programming Mode.

2 : RUN@Program

The drive accepts a Run command entered from an external source while in Programming Mode.

3 : Program@Stop only

The drive does not let the user enter Programming Mode when the drive is operating. The drive does not show the Programming Mode when a Run command is active.

■ b1-14: Phase Order Selection

No. (Hex.)	Name	Description	Default (Range)
b1-14 (01C3)	Phase Order Selection	V/f OLV OLV/PM AOLV/PM EZOLV Sets the phase order for output terminals U/T1, V/T2, and W/T3. This parameter can align the Forward Run command from the drive and the forward direction of the motor without changing wiring.	0 (0, 1)

0 : Standard

1 : Phase Order Switch

■ b1-15: Freq. Ref. Sel. 2

No. (Hex.)	Name	Description	Default (Range)
b1-15 (01C4)	Freq. Ref. Sel. 2	V/f OLV OLV/PM AOLV/PM EZOLV Sets the input method for frequency reference 2.	0 (0 - 4)

This parameter is enabled when *H1-xx = 9 [MFDI Function Select = Ext Ref 1/2]* is activated.

Note:

- Push LO/RE on the keypad to set the input mode to LOCAL and use the keypad to enter the frequency reference.
- If the frequency reference is 0 Hz or less than or equal to the value set in *E1-09 [Min Output Frequency]* and the drive receives the Run command, the RUN LED on the keypad will flash. Examine the setting for the frequency reference input and enter a value more than or equal to *E1-09*.

0 : Keypad

Use the keypad to enter the frequency reference.

Use ∧ and ∨ on the keypad to change the frequency reference.

1 : Analog Input

Use MFAI terminals AI1 and AI2 to input an analog frequency reference with a voltage or current input signal.

- Voltage Input
  Refer to Table 12.8 to use a voltage signal input to one of the MFAI terminals.

Table 12.8 Frequency Reference Voltage Input

Terminal	Terminal Signal Level	Parameter Settings				Note
		Signal Level Selection	Function Selection	Gain	Bias	
AI1	0 - 10 V (Lower Limit at 0)	H3-01 = 0	H3-02 = 4 [Freq Ref/BIAS]	H3-03	H3-04	-
	0 - 10 V (Without Lower Limit)	H3-01 = 1				
AI2	0 - 10 V (Lower Limit at 0)	H3-01 = 0	H3-10 = 4 [Freq Ref/BIAS]	H3-11	H3-12	Set DIP switch S1 to “V” for voltage input.
	0 - 10 V (Without Lower Limit)	H3-01 = 1				

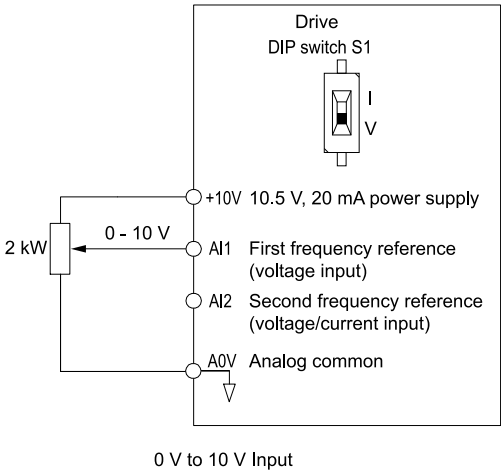

0 V to 10 V Input

Figure 12.17 Example of Setting the Frequency Reference with a Voltage Signal to Terminal AI1

Note:
You can also use this diagram to wire terminal AI2.

- Current Input
  Refer to Table 12.9 to use a current signal input to one of the MFAI terminals.

Table 12.9 Frequency Reference Current Input

Terminal	Signal Level	Parameter Settings				Note
		Signal Level Selection	Function Selection	Gain	Bias	
AI2	4 - 20 mA	H3-09 = 2	H3-10 = 4 [Freq Ref/BIAS]	H3-11	H3-12	Set DIP switch S1 to "I" for current input.
	0 - 20 mA	H3-09 = 3				

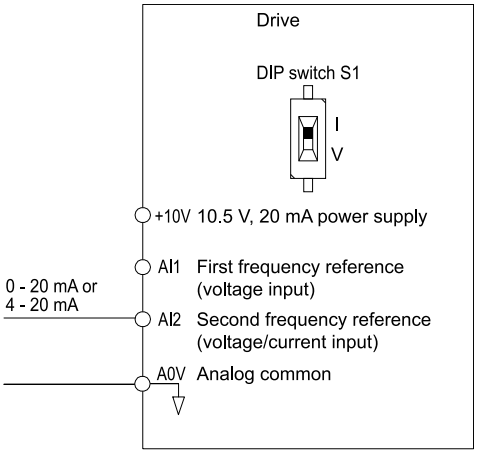

Figure 12.18 Example of Setting the Frequency Reference with a Current Signal to Terminal AI2

Changing between Master and Auxiliary Frequency References

Use the multi-step speed reference function to change the frequency reference input between terminals AI1 and AI2.

2 : Modbus

Use Modbus communications to enter the frequency reference.

3 : Option PCB

Use a communications option card connected to the drive to enter the Run command.

Refer to the instruction manual included with the option card to install and set the option card.

Note:
If you set *b1-15 = 3* but you do not connect an option card, *oPE03 [Multi-Function Input Setting Err]* will flash on the keypad.

4 : Pulse Train Input

Use a pulse train signal from the pulse train input terminal PI to enter the frequency reference.

Do this procedure to make sure that the pulse train signal is operating correctly.

1. Set *b1-15 = 4*, *H6-01 = 0 [PI Pulse Train Function = Freq Ref]*.
2. Set *H6-02 [PI Frequency Scale]* to the number of pulses that determine 100% of the frequency reference.
3. The terminal set in *H1-xx = 9 [MFDI Function Select = Ext Ref 1/2]* is activated.
4. Enter a pulse train signal on the terminal PI and make sure that the keypad shows a correct frequency reference.

■ b1-16: Run Comm. Sel 2

No. (Hex.)	Name	Description	Default (Range)
b1-16 (01C5)	Run Comm. Sel 2	V/f OLV OLV/PM AOLV/PM EZOLV Sets the input method for Run Command 2 when the user switches the control circuit terminals ON/OFF to change the Run command source.	0 (0 - 3)

Activate *H1-xx = 2 [MFDI Function Select = External Reference 1/2 Selection]* to enable this parameter.

0 : Keypad

Use the keypad to enter the Run command.

You can use the JOG operation or the FWD/REV commands from the keypad.

Note:

The LOR is on while the keypad is the Run command source.

1 : Digital Input

Use the control circuit terminals to enter the Run command. Select the input method for the Run command with an *H1-xx* parameter.

Set *H1-xx = 1 to 5 [Forward Run to FWD/REV Cmd, 3-Wire Seq.]*. The default setting is 2-wire sequence 1.

- 2-wire Sequence 1
  This sequence has two input types: FWD/Stop and REV/Stop. Set *A1-03 = 2220 [Init Parameters = 2-Wire Initialization]* to initialize the drive and set terminals DI1 and DI2 for a 2-wire sequence.
- 2-wire Sequence 2
  This sequence has two input types: Run/Stop and FWD/REV.
- 3-Wire Sequence
  This sequence has three input types: Run, Stop, and FWD/REV. Set *A1-03 = 3330 [Init Parameters = 3-Wire Initialization]* to initialize the drive and set terminals DI1, DI2, and DI5 for a 3-wire sequence.

2 : Modbus

Use Modbus communications to enter the Run command.

3 : Option PCB

Use a communications option card or input option card connected to the drive to enter the Run command.

Refer to the instruction manual included with the option card to install and set the option card.

Note:

If *b1-16 = 3* but no option card is connected, then *oPE03 [Multi-Function Input Setting Err]* will flash on the keypad.

■ b1-17: RUN@PowerUp Selection

No. (Hex.)	Name	Description	Default (Range)
b1-17 (01C6)	RUN@PowerUp Selection	V/f OLV OLV/PM AOLV/PM EZOLV Sets drive response when energizing a drive that has an external Run command. Set this parameter in applications where energizing or de-energizing the drive enables the Run command.	1 (1, 2)

1 : Disregard RUN

The drive does not start to operate the application when the power is switched ON, even when there is an existing Run command.

Enter the Run command again to operate the application.

Note:

When you energize the drive, RUN on the keypad will flash quickly if the Run command is already enabled from an external source.

2 : Accept RUN

When there is an existing Run command, the drive starts to operate the application when the power is switched ON.

WARNING! *Sudden Movement Hazard. When you use a 3-Wire sequence, set A1-03 = 3330 [Init Parameters = 3-Wire Initialization] and make sure that b1-17 = 1 [RUN@PowerUp Selection = Disregard RUN] (default). If you do not correctly set the drive parameters for 3-Wire operation before you energize the drive, the motor can suddenly rotate in reverse when you energize the drive.*

■ b1-35: DI Deadband Time

No. (Hex.)	Name	Description	Default (Range)
b1-35 (1117) Expert	DI Deadband Time	V/f OLV OLV/PM AOLV/PM EZOLV Sets the deadband time for MFDIs.	0.0 ms (0.0 to 100.0 ms)

When the on/off time for MFDIs is longer than the time set in *b1-35*, the drive activates the MFDI. Set this parameter to prevent malfunctions caused by relay chattering for applications in which relays send input to MFDI terminals.

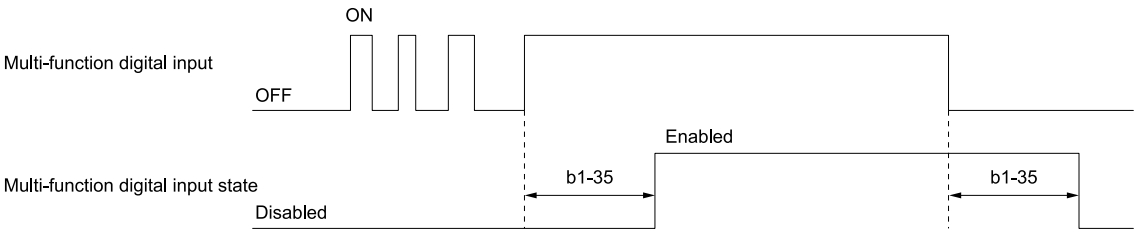

◆ b2: DC INJ / SHORT CKT BRAKE

b2 parameters set the DC Injection Braking and Short Circuit Braking functions.

- DC Injection Braking: A braking method that injects DC current into the motor windings. This function should not be used too frequently, because it generates a fair amount of heat in the motor.
- Short Circuit Braking: A braking method for PM motors.

■ b2-01: ZSpd/DCI Threshold

No. (Hex.)	Name	Description	Default (Range)
b2-01 (0189)	ZSpd/DCI Threshold	V/f OLV OLV/PM AOLV/PM EZOLV Sets the frequency to start DC Injection Braking or Short Circuit Braking.	Determined by A1-02 (0.0 - 10.0 Hz)

Note:

This parameter is available when *b1-03 = 0 [Stopping Method Selection = Ramp->Stop]*.

When the control method selected in *A1-02 [Control Method]* changes, the *b2-01* function changes.

Parameter Settings	Functions of *b2-01*
A1-02 = 0, 2 [V/f Control or OLVector]	Parameter *b2-01* sets the frequency to start DC Injection Braking at stop. When the output frequency is less than or equal to the value set in *b2-01*, the drive will inject the quantity of DC current set in *b2-02 [DCI Braking Current]* into the motor for the time set in *b2-04 [DC Inject Braking Time at Stop]*. 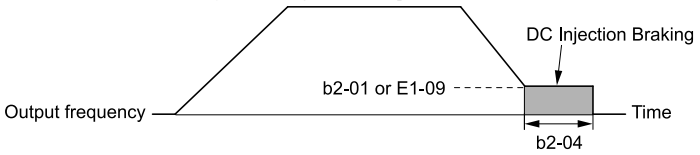 **Figure 12.19 DC Injection Braking at Stop** **Note:** When *b2-01 ≤ E1-09 [Min Output Frequency]*, the drive will start DC Injection Braking from the frequency set in *E1-09*.
A1-02 = 5, 6, or 8 [PM OLVector, PM AOLVector, or EZ Vector]	Parameter *b2-01* sets the frequency to start for Short Circuit Braking at stop. When the output frequency is less than or equal to the value set in *b2-01*, the drive will do Short Circuit Braking for the time set in *b2-13 [SCB Time@Stop]*. When *b2-04 > 0.00 s*, the drive will complete Short Circuit Braking, then do DC Injection Braking for the time set in *b2-04*. 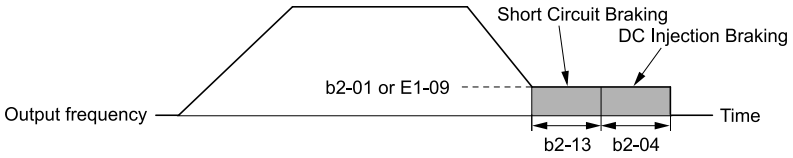 **Figure 12.20 Short Circuit Braking at Stop** **Note:** When *b2-01 ≤ E1-09*, the drive will start Short Circuit Braking from the frequency set in *E1-09*. If *b2-01 and E1-09 = 0 Hz*, the drive will not do Short Circuit Braking.

■ b2-02: DCI Braking Current

No. (Hex.)	Name	Description	Default (Range)
b2-02 (018A)	DCI Braking Current	V/f OLV OLV/PM AOLV/PM EZOLV Sets the DC Injection Braking current as a percentage of the drive rated current.	50% (0 - 75%)

When the DC Injection Braking current is more than 50%, the drive decreases the carrier frequency to 1 kHz. The motor rated current determines how much DC Injection Braking current that the drive can use.

The DC Injection Braking current level has an effect on the strength of the magnetic field that locks the motor shaft. As the current level increases, the motor windings will supply more heat. Do not set this parameter higher than the level that is necessary to hold the motor shaft.

■ b2-03: DCInj Time@Start

No. (Hex.)	Name	Description	Default (Range)
b2-03 (018B)	DCInj Time@Start	V/f OLV OLV/PM AOLV/PM EZOLV Sets the DC Injection Braking Time at stop.	0.00 s (0.00 - 10.00 s)

This function stops then restarts a coasting motor and increases motor flux to make high starting torque (a process called initial excitation). Set this parameter to 0.00 to disable the function.

Note:

To restart a coasting motor, use DC Injection Braking to stop and then restart the motor, or enable Speed Search. Enable DC Injection Braking or Speed Search to prevent *ov [Overvoltage]* or *oC [Overcurrent]* faults.

■ b2-04: DCInj Time@Stop

No. (Hex.)	Name	Description	Default (Range)
b2-04 (018C)	DCInj Time@Stop	V/f OLV OLV/PM AOLV/PM EZOLV Sets the DC Injection Braking Time at stop.	Determined by A1-02 (0.00 - 10.00 s)

This function fully stops a motor with a large inertia during deceleration and will not let the inertia continue to rotate the motor.

Set this parameter to 0.00 to disable the function.

When a longer time is required to stop the motor, increase the value.

■ b2-08: MagFlux Comp Value

No. (Hex.)	Name	Description	Default (Range)
b2-08 (0190)	MagFlux Comp Value	V/f OLV OLV/PM AOLV/PM EZOLV Sets how much current the drive injects when DC Injection Braking at Start starts (Initial Excitation) as a percentage of *E2-03 [Mot No-Load Current]*.	0% (0 - 1000%)

This parameter is effective when you start a high-capacity motor (a motor with a large secondary circuit time constant). This function can quickly increase motor flux to make high starting torque (a process called initial excitation).

The current level for DC Injection Braking at start changes linearly from the setting of *b2-08* to the setting of *b2-03* as shown in Figure 12.21.

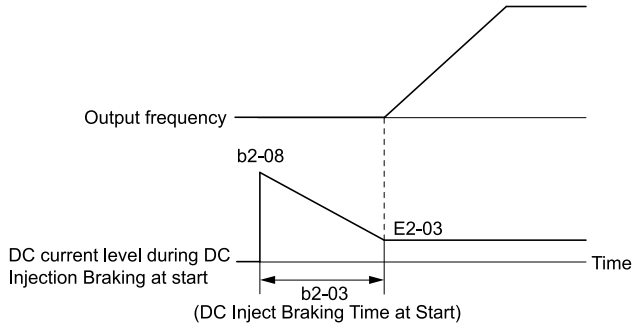

Figure 12.21 DC Current Level during DC Injection Braking at Start

Note:

- If *b2-08 < 100%*, flux will develop very slowly.
- When *b2-08 = 0%*, the DC current level will be the DC Injection current set in *b2-02 [DCI Braking Current]*.
- If *b2-08* is set too high, DC Injection Braking at start can cause a large noise. Adjust *b2-08* to decrease the volume to the permitted level.

■ b2-12: SCB Time@Start

No. (Hex.)	Name	Description	Default (Range)
b2-12 (01BA)	SCB Time@Start	V/f OLV OLV/PM AOLV/PM EZOLV Sets the Short Circuit Braking time at start.	0.00 s (0.00 - 25.50 s)

This function stops and restarts a coasting PM motor. The drive short circuits all the three motor phases to make braking torque in the motor.

Set this parameter to 0.00 to disable the function.

Note:
- Short circuit Braking will let external forces rotate the PM motor. Use DC Injection Braking to prevent motor rotation from external forces.
- Motor speed and load conditions can make it necessary to install a dynamic braking option on the drive.

■ b2-13: SCB Time@Stop

No. (Hex.)	Name	Description	Default (Range)
b2-13 (01BB)	SCB Time@Stop	V/f OLV OLV/PM AOLV/PM EZOLV Sets the Short Circuit Braking time at stop.	A1-02 = 8: 0.00 s Other than A1-02 = 8: 0.50 s (0.00 - 25.50 s)

This function fully stops a PM motor with a large inertia during deceleration and will not let the inertia continue to rotate the motor.

Short Circuit Braking operates for the time set in *b2-13* when output frequency is less than the value set in *b2-01 [ZSpd/DCI Threshold] or E1-09 [Min Output Frequency]*.

Set this parameter to 0.00 to disable the function.

Note:

Motor speed and load conditions can make it necessary to install a dynamic braking option on the drive.

■ b2-18: SCB Current

No. (Hex.)	Name	Description	Default (Range)
b2-18 (0177)	SCB Current	V/f OLV OLV/PM AOLV/PM EZOLV Sets the Short Circuit Braking Current as a percentage of the motor rated current.	100.0% (0.0 - 200.0%)

The Short Circuit Braking current cannot be higher than the drive rated current, although a higher current level can be set using *b2-18*. The maximum rated current is 120% when the drive is set for Normal Duty (*C6-01 = 1 [ND Rating]*). The maximum rated current is 150% when the drive is set for Heavy Duty (*C6-01 = 0 [HD Rating]*).

◆ b3: SPEED SEARCH

The Speed Search function detects the actual speed of a coasting motor, then restarts the motor before the motor stops.

Use Speed Search in these conditions:

- To continue operation after momentary power loss
- To switch from commercial power supply to drive power
- To restart a coasting fan

For example, the drive output turns off and the motor coasts when there is a momentary loss of power. After you return power, the drive does Speed Search on the coasting motor, and restarts the motor from the detected speed.

When you use a PM motor, enable *b3-01 [SpSrch@Start Selection]*.

There are two types of Speed Search for induction motors: Current Detection and Speed Estimation. Use parameter *b3-24 [SpSrch Method Selection]* to select the type of Speed Search.

Parameter settings are different for different types of Speed Search. Refer to Table 12.10 for more information.

Table 12.10 Speed Search and Related Parameters

Parameter	Speed Estimation	Current Detection 2
	b3-24 = 1	b3-24 = 2
b3-01 [SpSrch@Start Selection]	x	x
b3-03 [SpSrch Deceleration Time]	-	x
b3-05 [SpSrch Delay Time]	x	x
b3-06 [Speed Curr Lev1 for Estimation]	x	-
b3-07 [Speed Curr Lev2 for Estimation]	x	-
b3-08 [Speed ACR PGain for Estimation]	x	-
b3-09 [Speed ACR ITime for Estimation]	x	-
b3-10 [Speed Det Gain for Estimation]	x	-
b3-14 [Speed Bi-Directional Search]	x	x
b3-17 [Speed Retry Current Level]	x	x
b3-18 [Speed Retry Delay]	x	x
b3-19 [Speed Retry Times]	x	x
b3-24 [SpSrch Method Selection]	x (1)	x (2)
b3-25 [SpSrch Wait Time]	x	x
b3-26 [Dir. Determ. Level]	x	-
b3-29 [SpSrch BackEMF Threshold]	-	-
b3-31 [SpSrch I Ref Level]	-	x
b3-32 [SpSrch I End Level]	-	x
b3-33 [SpSrch@Uv Selection]	x	x
b3-54 [Search Time]	-	-
b3-55 [Speed Curr Rise Time]	-	-
b3-56 [InverseRotationSearch WaitTime]	-	x

Note:
- To use Speed Estimation Speed Search with V/f Control, do Rotational Auto-Tuning before you set the Speed Search function. If the wire length between the drive and motor changed since the last time you did Auto-Tuning, do Stationary Auto-Tuning for Line-to-Line Resistance process again.
- If *A1-02 = 5, 6 [PM OLVector, PM AOLVector]* and the wiring distance between the motor and drive is long or if the motor is coasting at more than or equal to 120 Hz, do not use Speed Search to restart the motor. Use Short Circuit Braking.

■ Current Detection 2

Use this Speed Search function with induction motors. Set *b3-24 = 2 [SpSrch Method Selection = Current Det2]*. Current Detection Speed Search injects current into the motor to detect the speed of an induction motor. Speed Search increases the output voltage for the time set in *L2-04 [Powloss Ramp Time@recovery]*, starting from the maximum output frequency or the frequency reference.

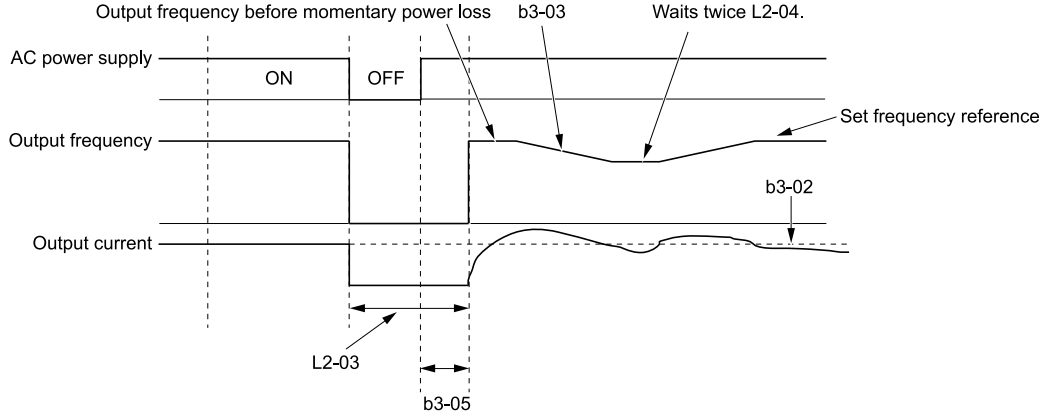

Figure 12.22 Current Detection 2 after Momentary Power Loss

Note:

Once power is restored, the drive will not execute Speed Search until the time set in *b3-05 [SpSrch Delay Time]* has passed. Thus, the drive will not always start Speed Search although the time set in *L2-03 [Min Baseblck Time]* is expired.

If you enter the Run command at the same time as Speed Search, the drive will not do Speed Search until the time set in *L2-03* is expired. When the value set in *L2-03* < *b3-05*, the drive will use the wait time set in *b3-05*.

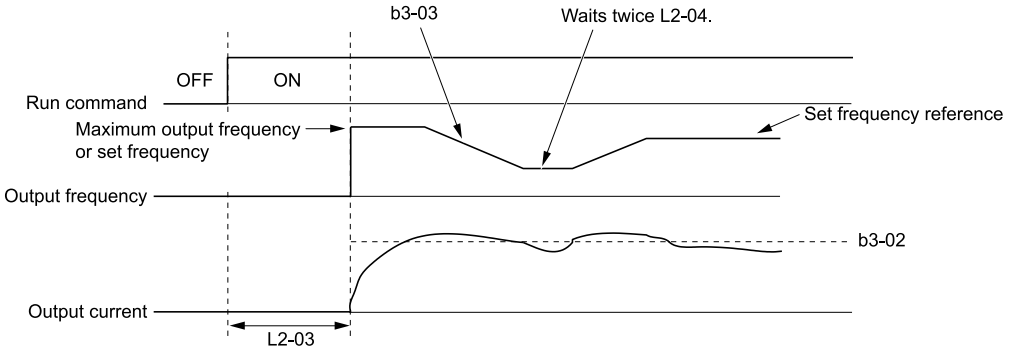

Figure 12.23 Speed Search Selection at Start (Current Detection Type)

WARNING! *Sudden Movement Hazard. Do not do Current Detection Speed Search with light loads or a stopped motor. If you do Auto-Tuning in these conditions, the motor can suddenly accelerate and cause serious injury or death.*

Note:

- You cannot use Current Detection Speed Search with PM motors.
- If the motor is rotating in reverse, you cannot do Speed Search.
- If the drive detects *oL1 [Motor Overload]* during Current Detection Speed Search, decrease the value set in *b3-03*.
- If the drive detects *oC [Overcurrent]* or *ov [Overvoltage]* during Current Detection Speed Search after the drive recovers from a momentary power loss, increase the value set in *L2-03*.

■ Speed Estimation

Use this Speed Search function with induction motors. Set *b3-24 = 1 [SpSrch Method Selection = Speed Estimation]*. This function uses less current and has a shorter search time than other functions. This function lets you do Speed Search when the motor is rotating in reverse. When you return power after a power loss, the motor will not suddenly accelerate.

Note:

You cannot do Speed Estimation Speed Search in these conditions:

- When You Operate More than One Motor with One Drive
- When you use a high-speed motor (120 Hz or higher)
- When you use a 1.5 kW or smaller motor.
- When the motor output is more than 1 frame size smaller than the drive capacity
- When there is a long wiring distance between the drive and motor

For these conditions, use Current Detection Speed Search.

Speed Estimation Speed Search uses these two steps to estimate the motor speed:

1. Residual Voltage Search
   When there is a short baseblock time, the drive searches for residual voltage. The drive uses the residual voltage in the motor to estimate the motor speed and direction of rotation. The drive outputs the estimated motor speed as frequency, then uses the deceleration rate set in *L2-04* to increase the voltage. When the output voltage aligns with the V/f pattern, the drive accelerates or decelerates the motor to the frequency reference. If the drive cannot estimate the motor speed because of low residual voltage, it will automatically do Current Injection.

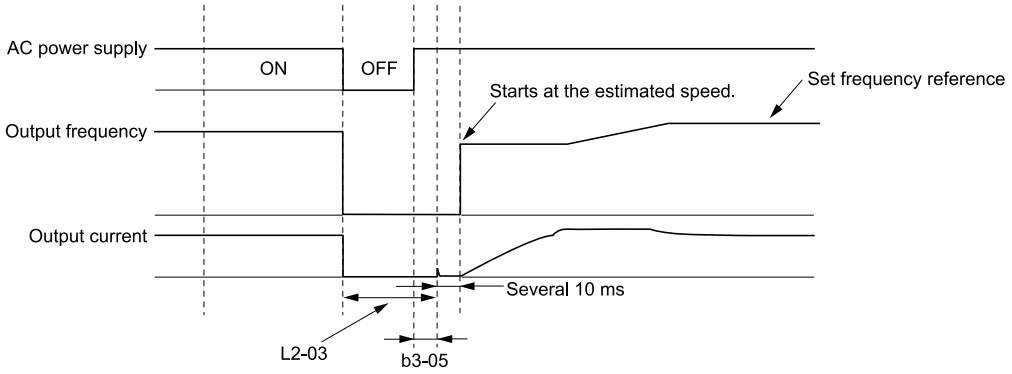

Figure 12.24 Speed Search after Baseblock

Note:
After you return power, the drive waits for the time set in *b3-05*. If power loss is longer than the time set in *L2-03*, the drive will start Speed Search when the time set in *b3-05* is expired after the power recovery.

2. Current Injection
If there is not sufficient residual voltage in the motor, the drive does Current Injection. The drive injects the quantity of DC current set in *b3-06 [Speed Curr Lev1 for Estimation]* into the motor windings to estimate the motor speed and direction of rotation. The drive outputs the estimated motor speed as frequency, then uses the deceleration rate set in *L2-04* to increase the voltage. When the output voltage aligns with the V/f pattern, the drive accelerates or decelerates the motor to the frequency reference.

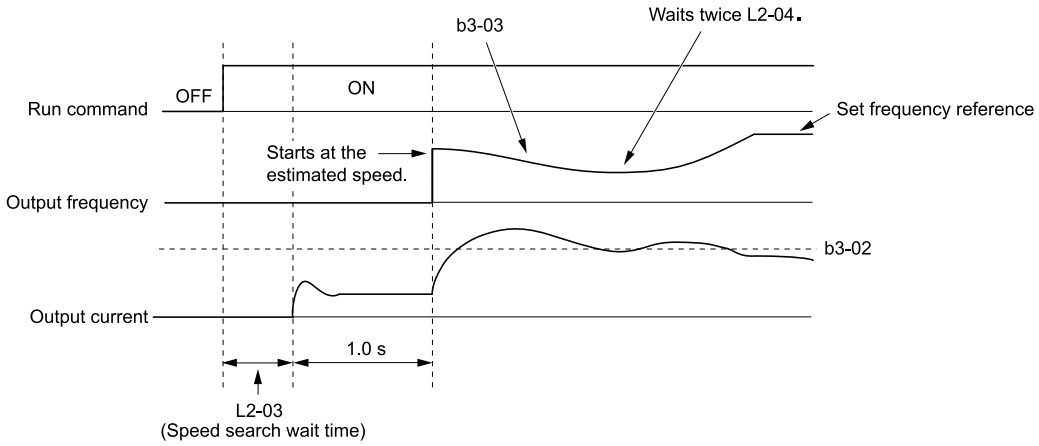

Figure 12.25 Speed Search Selection at Start

Note:
Set the lower limit of the delay time to *b3-05* for when Speed Search starts.

■ Speed Search and Operation Conditions

These conditions apply to Speed Search operation. When *A1-02 = 0, 2 [Control Method = V/f Control, OLVector]*, set *b3-24 [SpSrch Method Selection]* before you do Speed Search.

- Do Speed Search with each Run Command
  The drive ignores a Speed Search command from the external terminals.
- Use an MFDI to do an External Speed Search Command
  To use an MFDI to do Speed Search, input the Run command at the same time that terminal DIx set for Speed Search activates, or after Speed Search activates.
  Set Speed Search to *H1-xx* to do the function externally. You cannot set external Speed Search 1 and 2 at the same time.

Table 12.11 Execute Speed Search via the Digital Input Terminals

H1-xx Setting	Name	Current Detection 2	Speed Estimation
67	SpdSrch Fmax	ON: Speed Search starts from *E1-04 [Max Output Frequency]*.	External Speed Search commands 1 and 2 work the same. The drive estimates the motor speed, then starts Speed Search from the estimated speed.
68	SpdSrch Fref	ON: Speed Search starts from the frequency reference immediately before you input the Speed Search command.	

- Do Speed Search with Each Auto Restart

Set *L5-01 [Auto-Reset Attempts] = 1* or more. After there is an Auto Restart fault, the drive automatically does Speed Search.

- Do Speed Search after Momentary Power Loss
  Set *L2-01 =1 [RideThru@PwrLoss = Enabled]*, and set L2-50 = 0, 1 *[RidThruMode@PwrLoss = Timer Controlled, While CPU Active]*.
- Do Speed Search after You Clear the External Baseblock Command
  After you clear the external baseblock command, enable the Run command, and when the output frequency is higher than the minimum frequency, the drive does Speed Search.

■ b3-01: SpSrch@Start Selection

No. (Hex.)	Name	Description	Default (Range)
b3-01 (0191)	SpSrch@Start Selection	V/f OLV **OLV/PM** AOLV/PM EZOLV Sets the Speed Search at Start function where the drive will perform Speed Search with each Run command.	Determined by A1-02 (0, 1)

0 : Disabled

Enter a Run command to start to operate the drive at the minimum output frequency.

When the Run command is enabled and the *Speed Search from Fmax or Fref [H1-xx = 67, 68]* is input from a multi-function input terminal, the drive will do Speed Search and start to operate the motor.

1 : Enabled

Enter the Run command to do Speed Search. The drive completes Speed Search then starts to operate the motor.

■ b3-02: SpSrch Deactivation Current

No. (Hex.)	Name	Description	Default (Range)
b3-02 (0192)	SpSrch Deactivation Current	**V/f** **OLV** OLV/PM AOLV/PM EZOLV Sets the current level that stops Speed Search as a percentage of the drive rated output current. Usually it is not necessary to change this setting.	Determined by A1-02 (0 - 200%)

If the drive cannot restart the motor, decrease this setting.

■ b3-03: SpSrch Deceleration Time

No. (Hex.)	Name	Description	Default (Range)
b3-03 (0193)	SpSrch Deceleration Time	**V/f** **OLV** OLV/PM AOLV/PM **EZOLV** Sets the deceleration time during Speed Search operation. Set the length of time to decelerate from the maximum output frequency to the minimum output frequency.	2.0 s (0.1 - 10.0 s)

This is the output frequency deceleration time used by Current Detection Speed Search and by the Current Injection Method of Speed Estimation Speed Search.

Note:
- When *A1-02 = 8 [Control Method = EZ Vector]*, this parameter takes effect only in Expert Mode.
- If the drive detects *oL1 [Motor Overload]* during Current Detection Speed Search, decrease the value set in *b3-03*.

■ b3-04: SpSrch V/F Gain

No. (Hex.)	Name	Description	Default (Range)
b3-04 (0194)	SpSrch V/F Gain	**V/f** OLV OLV/PM AOLV/PM EZOLV Sets the ratio used to reduce the V/f during searches to reduce the output current during speed searches.	Determined by o2-04 (10 - 100)

Use the this formula to calculate the output voltage during Speed Search:

Output voltage during Speed Search = Configured V/f × b3-04

When the current detection search operates correctly, this configuration is not necessary.

■ b3-05: SpSrch Delay Time

No. (Hex.)	Name	Description	Default (Range)
b3-05 (0195)	SpSrch Delay Time	**V/f** **OLV** **OLV/PM** **AOLV/PM** **EZOLV** Sets the Speed Search delay time to activate a magnetic contactor installed between the drive and motor.	0.2 s (0.0 - 100.0 s)

When you use a magnetic contactor between the drive and motor, you must close the contactor before the drive will do Speed Search. This parameter sets a delay time to activate the magnetic contactor.

■ b3-06: Speed Curr Lev1 for Estimation

No. (Hex.)	Name	Description	Default (Range)
b3-06 (0196) Expert	Speed Curr Lev1 for Estimation	V/f OLV OLV/PM AOLV/PM EZOLV Sets the level of current that flows to the motor during Speed Estimation Speed Search as a coefficient of the motor rated current. Usually it is not necessary to change this setting.	Determined by o2-04 (0.0 - 2.0)

When the speed estimation value is the minimum output frequency, increase this setting. You can do this when the motor coasts at a high speed while the drive estimates the speed during Speed Estimation Speed Search. The limit of the output current during speed search is automatically the drive rated current.

Note:
When the drive cannot accurately estimate the speed after you adjust this parameter, use Current Detection Speed Search.

■ b3-07: Speed Curr Lev2 for Estimation

No. (Hex.)	Name	Description	Default (Range)
b3-07 (0197) Expert	Speed Curr Lev2 for Estimation	V/f OLV OLV/PM AOLV/PM EZOLV Sets the level of current that flows to the motor during Speed Estimation Speed Search as a coefficient of *E2-03 [Mot No-Load Current]* or *E4-03 [M2 No-Load Current]*. Usually it is not necessary to change this setting.	1.0 (0.0 - 3.0)

During Speed Estimation Speed Searches, when the speed estimation value aligns with the minimum output frequency, increase the setting value in 0.1-unit increments. The limit of the output current during speed search is automatically the drive rated current.

■ b3-08: Speed ACR PGain for Estimation

No. (Hex.)	Name	Description	Default (Range)
b3-08 (0198) Expert	Speed ACR PGain for Estimation	V/f OLV OLV/PM AOLV/PM EZOLV Sets the proportional gain for the automatic current regulator during Speed Estimation Speed Search. Also adjusts speed search responsiveness. Usually it is not necessary to change this setting.	Determined by A1-02 and o2-04 (0.00 - 6.00)

■ b3-09: Speed ACR ITime for Estimation

No. (Hex.)	Name	Description	Default (Range)
b3-09 (0199) Expert	Speed ACR ITime for Estimation	V/f OLV OLV/PM AOLV/PM EZOLV Sets the integral time for the automatic current regulator during Speed Estimation Speed Search. Also adjusts speed search responsiveness. Usually it is not necessary to change this setting.	Determined by A1-02 (0.0 - 1000.0 ms)

■ b3-10: Speed Det Gain for Estimation

No. (Hex.)	Name	Description	Default (Range)
b3-10 (019A) Expert	Speed Det Gain for Estimation	V/f OLV OLV/PM AOLV/PM EZOLV Sets the gain to correct estimated frequencies from Speed Estimation Speed Search.	1.05 (1.00 - 1.20)

If the drive detects *ov [DC Bus Overvoltage]* when you restart the motor, increase the setting value.

■ b3-14: Speed Bi-Directional Search

No. (Hex.)	Name	Description	Default (Range)
b3-14 (019E)	Speed Bi-Directional Search	V/f OLV OLV/PM AOLV/PM EZOLV Sets the direction of Speed Search to the direction of the frequency reference or in the motor rotation direction as detected by the drive.	Determined by A1-02 and b3-24 (0, 1)

Note:
- When *E9-01 = 0 [Motor Type Selection = Induction (IM)]* and *A1-02 = 0, 2, or 8 [Control Method Selection = V/f, OLV, or EZOLV]*, the default settings change when the setting of *b3-24 [Speed Search Method Selection]* changes.
  – *b3-24 = 1 [Speed Estimation]*: Refer to *Parameters that Change from the Default Settings with A1-02 [Control Method] on page 403*.
  – *b3-24 = 2 [Current Detection 2]*: 0
- When *E9-01 = 1 or 2 [Permanent Magnet (PM), Synchronous Reluctance (SynRM)]* and *A1-02 = 0 or 8 [V/f, EZOLV]*, refer to *Parameters that Change from the Default Settings with A1-02 [Control Method] on page 403*.

When you set *A1-02*, *b3-24*, and *E9-01*, set *b3-14*.

0 : Disabled

The drive uses the frequency reference to detect the direction of motor rotation.

1 : Enabled

The drive detects the direction of motor rotation during Speed Search.

■ b3-17: Speed Retry Current Level

No. (Hex.)	Name	Description	Default (Range)
b3-17 (01F0) Expert	Speed Retry Current Level	V/f OLV OLV/PM AOLV/PM EZOLV Sets the current level for the search retry function in Speed Estimation Speed Search as a percentage where drive rated current is a setting value of 100%.	150% (0 - 200%)

When a large quantity of current flows during Speed Estimation Speed Search, the drive temporarily stops operation to prevent overvoltage and overcurrent. When the current is at the level set in *b3-17*, the drive tries speed search again.

■ b3-18: Speed Retry Delay

No. (Hex.)	Name	Description	Default (Range)
b3-18 (01F1) Expert	Speed Retry Delay	V/f OLV OLV/PM AOLV/PM EZOLV Sets the length of time that the drive will wait to retry Speed Estimation Speed Search when too much current flow stopped the Speed Search.	0.10 s (0.00 - 1.00 s)

When the current is more than the level set in *b3-17 [Speed Retry Current Level]* during the time set in *b3-18*, the drive tries speed search again.

■ b3-19: Speed Retry Times

No. (Hex.)	Name	Description	Default (Range)
b3-19 (01F2)	Speed Retry Times	V/f OLV OLV/PM AOLV/PM EZOLV Sets the number of times to restart Speed Search if Speed Search does not complete.	3 times (0 - 10 times)

If the drive does the number of Speed Search restarts set in this parameter, it will trigger an *SEr [Speed Search Retries Exceeded]* error.

■ b3-24: SpSrch Method Selection

No. (Hex.)	Name	Description	Default (Range)
b3-24 (01C0)	SpSrch Method Selection	V/f OLV OLV/PM AOLV/PM EZOLV Sets the Speed Search method when you start the motor or when you restore power after a momentary power loss.	2 (1, 2)

Note:
- When *A1-02 = 8 [Control Method = EZ Vector]*, the default setting changes when the setting for *E9-01 [Motor Type Selection]* changes.
  – E9-01 = 0 [IM]: 2
  – E9-01 = 1, 2 [PM, SynRM]: 1
- When you set *b3-24*, it will trigger the drive to initialize *b3-14 [Speed Bi-Directional Search]*. After you set *b3-24*, set *b3-14*.

Set *b3-01 = 1 [SpSrch@Start Selection = Enabled]* to do Speed Search at start. Set *L2-01 = 1 [RideThru@PwrLoss = Enabled]*] to do Speed Search after you restore power after a momentary power loss.

1 : Speed Estimation

The drive uses the residual voltage from a short baseblock time to estimate the motor speed.

If there is not sufficient residual voltage, then the drive will inject DC current into the motor to estimate the motor speed.

2 : Current Det2

The drive will inject DC current into the motor to estimate motor speed.

■ b3-25: SpSrch Wait Time

No. (Hex.)	Name	Description	Default (Range)
b3-25 (01C8) Expert	SpSrch Wait Time	V/f OLV OLV/PM AOLV/PM EZOLV Sets the length of time the drive will wait to start the Speed Search Retry function.	0.5 s (0.0 - 30.0 s)

If the drive detects these faults during speed search, increase the setting value:

- *oC [Overcurrent]*
- *ov [Overvoltage]*
- *SEr [Speed Search Retries Exceeded]*

■ b3-26: Dir. Determ. Level

No. (Hex.)	Name	Description	Default (Range)
b3-26 (01C7) Expert	Dir. Determ. Level	V/f OLV OLV/PM AOLV/PM EZOLV Sets the level to find the motor rotation direction. Increase the value if the drive cannot find the direction.	1000 (40 to 60000)

■ b3-29: SpSrch BackEMF Threshold

No. (Hex.)	Name	Description	Default (Range)
b3-29 (077C) Expert	SpSrch BackEMF Threshold	V/f OLV OLV/PM AOLV/PM EZOLV Sets the induced voltage for motors that use Speed Search. The drive will start Speed Search when the motor induced voltage level is the same as the setting value. Usually it is not necessary to change this setting.	10% (0 - 10%)

To make adjustments, gradually decrease the setting value. If you decrease the setting value too much, speed search will not operate correctly.

■ b3-31: SpSrch I Ref Level

No. (Hex.)	Name	Description	Default (Range)
b3-31 (0BC0) Expert	SpSrch I Ref Level	V/f OLV OLV/PM AOLV/PM EZOLV Sets the current level that decreases the output current during Current Detection Speed Search.	1.50 (1.50 - 3.50)

Set this parameter as a ratio of *E2-03 [Mot No-Load Current]*. The setting is a ratio with respect to 30% of the motor rated current when *E2-03* ≤ *E2-01 [Mot Rated Current (FLA)]* × 0.3.

Note:

The setting is a ratio with respect to *E9-06 [Motor Rated Current]* × 0.5 when *A1-02 = 8 [Control Method = EZ Vector]*.

■ b3-32: SpSrch I End Level

No. (Hex.)	Name	Description	Default (Range)
b3-32 (0BC1) Expert	SpSrch I End Level	V/f OLV OLV/PM AOLV/PM EZOLV Sets the current level that completes Speed Search.	1.20 (0.00 - 1.49)

The Current Detection Speed Search gradually decreases the output frequency to search for the motor speed when the output current is equal to or less than Speed Search Current Complete Level.

Set this parameter as a ratio of *E2-03 [Mot No-Load Current]*. The setting is a ratio with respect to 30% of the motor rated current when *E2-03* ≤ *E2-01 [Mot Rated Current (FLA)]* × 0.3.

Note:

The setting is a ratio with respect to *E9-06 [Motor Rated Current]* × 0.5 when *A1-02 = 8 [Control Method = EZ Vector]*.

■ b3-33: SpSrch@Uv Selection

No. (Hex.)	Name	Description	Default (Range)
b3-33 (0B3F) Expert	SpSrch@Uv Selection	V/f OLV **OLV/PM** AOLV/PM EZOLV Sets the function that starts Speed Search at start-up if the drive detects a *Uv [Undervoltage]* when it receives a Run command.	1 (0, 1)

Set these three parameters as shown to enable *b3-33*:

- *L2-01 = 1, 2 [RideThru@PwrLoss = Enabled]*
- *L2-50 = 0, 1 [RidThruMode@PwrLoss = Timer Controlled, While CPU Active]*
- *b3-01 = 1 [SpSrch@Start Selection = Enabled]*
- *b1-03 = 1 [Stopping Method Selection = Coast->Stop]*

0 : Disabled

1 : Enabled

■ b3-54: Search Time

No. (Hex.)	Name	Description	Default (Range)
b3-54 (3123)	Search Time	V/f OLV OLV/PM AOLV/PM **EZOLV** Sets the length of time that the drive will run Speed Search.	400 ms (10 - 2000 ms)

If you set this parameter too low, Speed Search will not operate correctly.

If the drive detects *oC [Overcurrent]* immediately after Speed Search Starts:

- Increase the value of *L2-03 [Min Baseblck Time]* and decrease the motor speed you use to start Speed Search.
- Increases the setting value of *b3-08 [Speed ACR PGain for Estimation]*.
- Increase the value of *b3-54*.

If the drive detects *oC* or *ov [DC Bus Overvoltage]* during Speed Search, increase the value of *b3-08*.

■ b3-55: Speed Curr Rise Time

No. (Hex.)	Name	Description	Default (Range)
b3-55 (3124) Expert	Speed Curr Rise Time	V/f OLV OLV/PM AOLV/PM **EZOLV** Sets the length of time that the drive will increase the current from zero current to the setting value of *b3-06 [Speed Curr Lev1 for Estimation]*.	10 ms (10 - 2000 ms)

Gradually increase the setting value when a large quantity of current flows after speed search starts. If you set this value too high, speed search will not operate correctly.

■ b3-56: InverseRotationSearch WaitTime

No. (Hex.)	Name	Description	Default (Range)
b3-56 (3126)	InverseRotationSearch WaitTime	**V/f** **OLV** OLV/PM AOLV/PM **EZOLV** Sets the wait time until the drive starts inverse rotation search after it completes forward search when you do inverse rotation search during Current Detection Speed Search.	Determined by o2-04 (0.1 - 5.0 s)

■ b3-61: Magn Pole Find Gain

No. (Hex.)	Name	Description	Default (Range)
b3-61 (1B96) Expert	Magn Pole Find Gain	V/f OLV OLV/PM **AOLV/PM** EZOLV Sets the responsiveness for initial motor magnetic pole calculation when *A1-02 = 6 [Control Method = PM AOLVector]*. Set *b3-61 > 0.0* for an ordinary IPM motor.	5.0 (-20.0 - +20.0)

Used when *n8-35 = 2 [InitRotorPos Selection = HiFreq Injection]*. Sets the responsiveness for initial motor magnetic pole calculation. Set this parameter to a positive value for an ordinary monitor. When you use High Frequency injection Tuning, it will automatically set this parameter.

◆ b4: TIMER

The drive uses timers to delay activating and deactivating MFDO terminals.

Timers prevent sensors and switches from making chattering noise.

There are two types of timers:

- Timers that set a delay for timer inputs and timer outputs.
  These timers delay activating and deactivating of the MFDIs and MFDOs.
  To enable this function, set *H1-xx = 60 [MFDI Function Select = Timer Fn Input], and set H2-01 to H2-03 = 39 [MFDO Function Select = Timer Output]*.
- Timers that set a delay to activate and deactivate MFDO terminals.
  These timers delay activating and deactivating MFDO terminals.
  To enable this function, set delay times in parameters *b4-03 to b4-08*.

■ Timer Function Operation

- Timers that Set a Delay for Timer Inputs and Timer Outputs
  Triggers timer output if the timer input is active for longer than the time set in *b4-01 [Timer Function ON-Delay Time]*. Triggers timer output late for the time set in *b4-02 [Timer Function OFF-Delay Time]*. Figure 12.26 shows an example of how the timer function works.

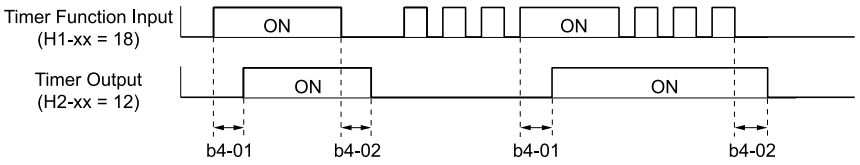

Figure 12.26 Example of Timer Function Operation

- Setting On/Off-delay Time for MFDO
  Figure 12.27 uses H2-01 terminals to show an example of how the timer function works. Use *b4-03 [Terminal M1-M2 ON-Delay Time]* and *b4-04 [Terminal M1-M2 OFF-Delay Time]* to set this function.

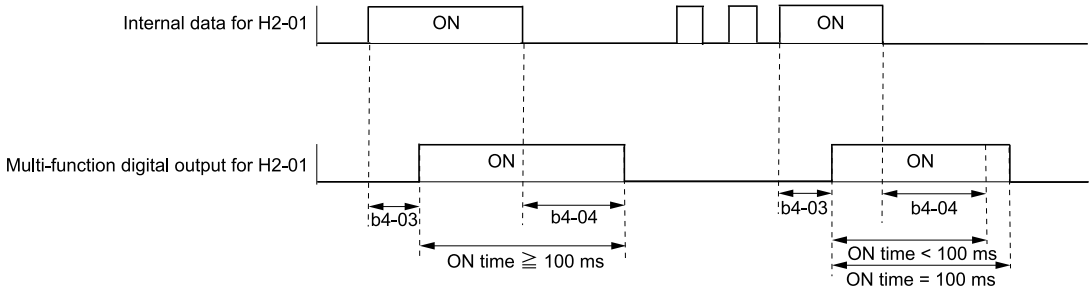

Figure 12.27 Example of How the Timer Function Works with H2-01 Terminals

Note:
When the terminal is triggered, it continues for a minimum of 100 ms. The on/off-delay time of MFDO terminal does not have an effect.

■ b4-01: Timer ON Time Delay

No. (Hex.)	Name	Description	Default (Range)
b4-01 (01A3)	Timer ON Time Delay	V/f OLV OLV/PM AOLV/PM EZOLV Sets the ON-delay time for the timer input.	0.0 s (0.0 - 3000.0 s)

■ b4-02: Timer OFF Time Delay

No. (Hex.)	Name	Description	Default (Range)
b4-02 (01A4)	Timer OFF Time Delay	V/f OLV OLV/PM AOLV/PM EZOLV Sets the OFF-delay time for the timer input.	0.0 s (0.0 - 3000.0 s)

■ b4-03: NO,NC,CM ON-Time Delay

No. (Hex.)	Name	Description	Default (Range)
b4-03 (0B30) Expert	NO,NC,CM ON-Time Delay	V/f OLV OLV/PM AOLV/PM EZOLV Sets the delay time until the contact is turned ON after the function set with *H2-01* turns ON.	0 ms (0 - 65000 ms)

■ b4-04: NO,NC,CM OFF-Time Delay

No. (Hex.)	Name	Description	Default (Range)
b4-04 (0B31) Expert	NO,NC,CM OFF-Time Delay	V/f OLV OLV/PM AOLV/PM EZOLV Sets the delay time to deactivate the contact after the function set in *H2-01* deactivates.	0 ms (0 - 65000 ms)

■ b4-05: DO1 ON-Time Delay

No. (Hex.)	Name	Description	Default (Range)
b4-05 (0B32) Expert	DO1 ON-Time Delay	V/f OLV OLV/PM AOLV/PM EZOLV Sets the delay time to activate the contact after the function set in *H2-02* activates.	0 ms (0 - 65000 ms)

■ b4-06: DO1 OFF-Time Delay

No. (Hex.)	Name	Description	Default (Range)
b4-06 (0B33) Expert	DO1 OFF-Time Delay	V/f OLV OLV/PM AOLV/PM EZOLV Sets the delay time to deactivate the contact after the function set in *H2-02* deactivates.	0 ms (0 - 65000 ms)

■ b4-07: DO2 ON-Time Delay

No. (Hex.)	Name	Description	Default (Range)
b4-07 (0B34) Expert	DO2 ON-Time Delay	V/f OLV OLV/PM AOLV/PM EZOLV Sets the delay time until the contact is turned ON after the function set with *H2-03* turns ON.	0 ms (0 - 65000 ms)

■ b4-08: DO2 OFF-Time Delay

No. (Hex.)	Name	Description	Default (Range)
b4-08 (0B35) Expert	DO2 OFF-Time Delay	V/f OLV OLV/PM AOLV/PM EZOLV Sets the delay time to deactivate the contact after the function set in *H2-03* deactivates.	0 ms (0 - 65000 ms)

◆ b5: PID CONTROL

The drive has a PID control function. You can control drive output to adjust the proportional gain, integral time, and derivative time that has an effect on the bias between the target value and the feedback value to match the target value to the detected value. Use this function to adjust the drive output to accurately match the flow, pressure, and temperature in the application match the target value.

Use a combination of these controls to increase the performance:

- P control
  P control has a proportional effect on the deviation. It outputs the product (the controlled output) proportional to the deviation. You cannot use only the offset from P control to get to zero deviation.
- I control
  I control is the integral of the deviation. It uses an integral value of the deviation to output the product (the controlled output). I control helps align the feedback value and the target value. If you use only a proportional effect (P control), it will cause and offset. Use a proportional effect with integral control, and the offset will disappear over time.
- D control
  D control is the derivative of the deviation. D control has an effect on drive output when there are sudden, large changes in the deviation or feedback value. It quickly returns drive output to the value before the sudden change. It multiplies a time constant by a derivative value of the deviation (slope of the deviation), and adds that result to PID input to calculate the deviation of the signal, then it corrects the deviation.

Note:
D control has causes less stable operation because the noise changes the deviation signal. Use D control only when necessary.

■ PID Control Operation

This figure shows PID control operation. The modified output (output frequency) changes when the drive uses PID control to keep the deviation (the difference between the target value and the feedback value) constant.

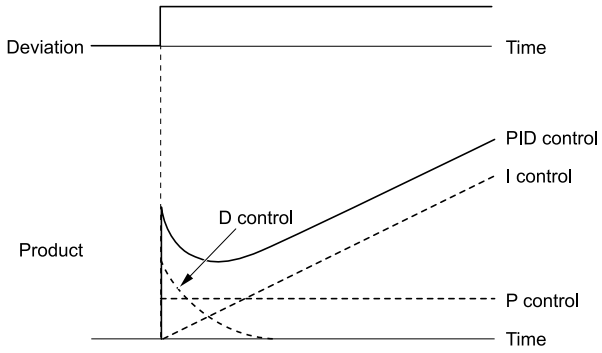

Figure 12.28 PID Control Operation

■ PID Control Applications

This table shows applications for PID control.

Table 12.12 PID Control Applications

Application	Control Content	Sensors Used
Speed Control	• The drive uses a feedback signal for the machine speed, and adjusts that speed to align with the target value. • The drive uses speed data from other machinery as the target value to do synchronous control. The drive then adds that target value to the feedback from the machine it is operating to align its speed with the other machinery.	Tacho generator
Pressure control	The drive uses feedback from the actual pressure to hold constant pressure.	Pressure sensor
Flow control	The drive uses feedback from the actual flow to hold constant flow.	Flow rate sensor
Temperature control	The drive uses feedback from the actual temperature to control a fan and hold constant temperature.	Thermocoupler, thermistor

■ Input Methods for the PID Setpoint

Use *b5-01 = 1 [PID Enable = Enabled]* and *b5-70 to b5-72* to select how the PID setpoint is input to the drive.

When *b5-70 = 0 [PID MainRefMode = PID only]* or *b5-70 = 1 [Fref + PID] and b5-72 = 0 [PID D-FF Mode = D=Fdback]*, either the frequency reference set in *b1-01 [Freq. Ref. Sel. 1]* or *b1-15 [Freq. Ref. Sel. 2]* will be the PID setpoint, or the one of the inputs in Table 12.13 will be the PID setpoint.

When *b5-70 = 1 [Fref + PID]* or *b5-70 = 1 [Fref + PID] and b5-72 = 1 [D=Fdback]*, one of the inputs in Table 12.13 will be the PID setpoint.

Table 12.13 Input Methods for the PID Setpoint

Input Methods for the PID Setpoint	Setting Value
MFAI terminal AI1	Set *H3-02 = 10 [AI1 Function Selection = PID SetPoint]*.
MFAI terminal AI2	Set *H3-10 [AI2 Function Selection] = 10*.
Modbus register 0006H	Sets Modbus register 000FH (Control Selection Setting) bit 1 to 1 (PID setpoint input). Enters the PID setpoint to Modbus register 0006H (PID Target, 0.01% units, signed).
Pulse train input terminal DI	Set *H6-01 = 2 [PI Pulse Train Function = PID SP Value]*.
b5-19 [PID Setpoint Value]	Set *b5-18 = 1 [b5-19 PID SP Selection = Enabled]*. Enters the PID setpoint to *b5-19*.

Note:
If you set two inputs for the PID setpoint, it will trigger operation error *oPE07 [Analog Input Selection Error]*.

■ Entering the PID Feedback Value

You can use two methods to input the PID feedback value to the drive. One method uses a single feedback signal for usual PID control. The other method uses two signals. The difference between those signals sets the deviation.

- **Use a single feedback signal.**

Use Table 12.14 to select how the feedback signal is input to the drive for PID control.

Table 12.14 PID Feedback Input Method

PID Feedback Input Method	Setting Value
MFAI terminal AI1	Set *H3-02 = F [PID Fbk]*.
MFAI terminal AI2	Set *H3-10 = F*.
Pulse train input terminal DI	Set *H6-01 = 1 [PIDFbk Value]*.

- **Use two signals, and use the difference between those signals as the feedback signal.**
The drive uses two feedback signals, and the difference between those signals becomes the deviation.
Use Table 12.15 to select how the second feedback value is input to the drive. The drive calculates the deviation of the second feedback value. Set *H3-02 or H3-10 = 11 [AI1 Function Selection or AI2 Function Selection = Diff PIDFbk]* to enable the second feedback signal used to calculated the deviation.

Table 12.15 PID Differential Feedback Input Method

PID Differential Feedback Input Method	Setting Value
MFAI terminal AI1	Set *H3-02 = 11 [Diff PIDFbk]*.
MFAI terminal AI2	Set *H3-10 = 11*.

Note:
If you set *H3-02 and H3-10 = 11*, it will trigger *oPE07 [Analog Input Selection Error]*.

■ PID Control Block Diagram

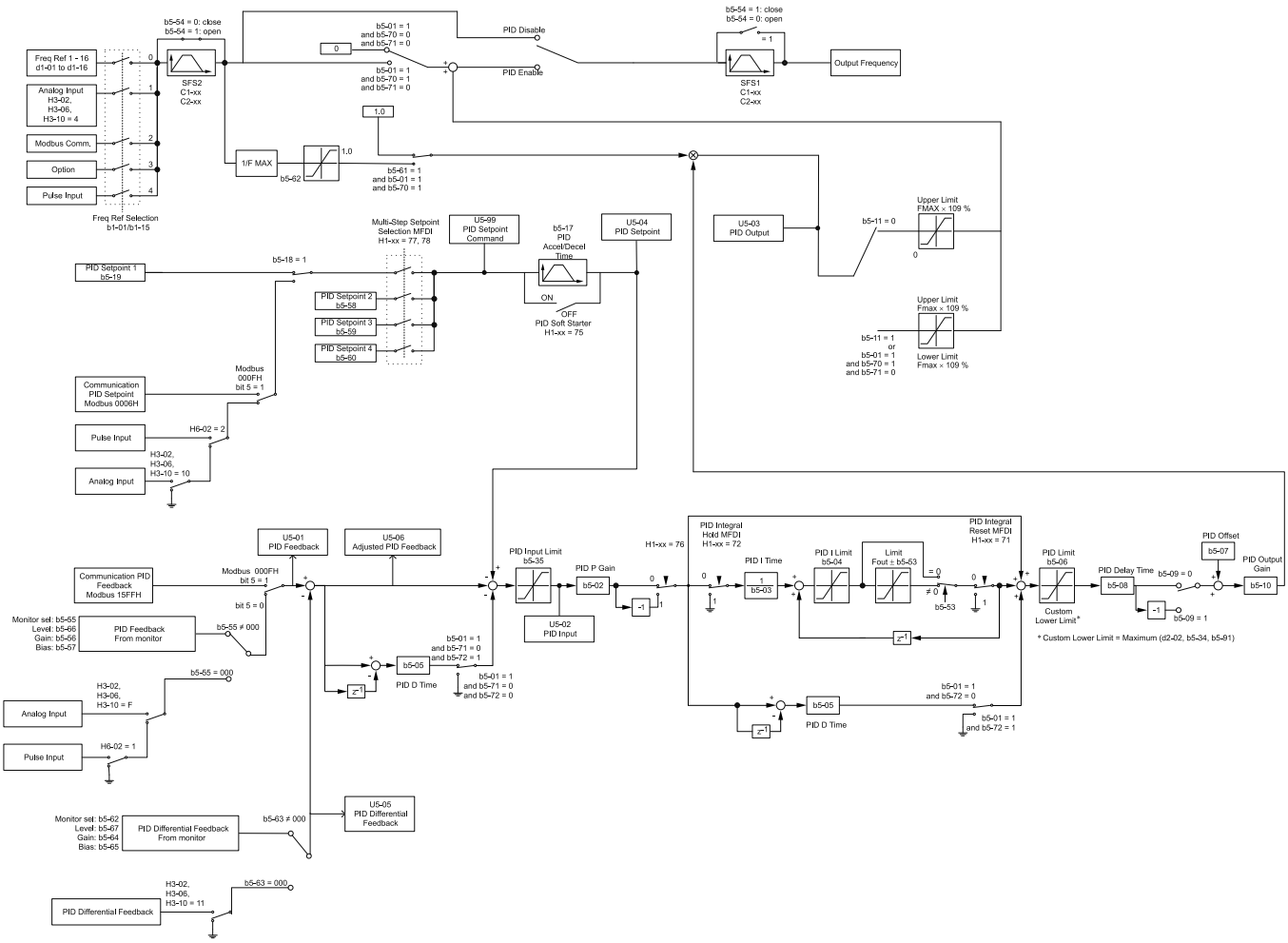

Figure 12.29 PID Control Block Diagram

■ PID Feedback Loss Detection

The PID feedback loss detection function detects broken sensors and defective wiring between the drive and sensors.

Use the PID feedback loss detection function when you use PID control. If the feedback signal is too low, the motor can suddenly accelerate to the maximum output frequency. This function prevents such risks to the load.

The drive uses two methods to detect feedback loss:

- *PID Feedback Loss [FbL]*
  Set these parameters for the PID feedback loss detection function.
  The drive detects feedback loss when the feedback value is less than the value in *b5-13* for longer than the time in *b5-14*.
  - *b5-12 [Fdback Loss Select Mode]*
  - *b5-13 [Fdback Loss Lvl]*
  - *b5-14 [Fdback Loss Time]*
- *Excessive PID Feedback [FbH]*
  Set these parameters to set how the drive detects a feedback level that is too high.
  The drive detects too much PID feedback when the feedback value is more than the value in *b5-36* for longer than the time in *b5-37*.
  - *b5-12 [Fdback Loss Select Mode]*
  - *b5-36 [PID HiHi Limit Level]*
  - *b5-37 [PID HiHi Time]*

This figure shows the operation principle when the feedback value is too low, and the drive detects feedback loss. The operation is the same when the drive detects too much feedback.

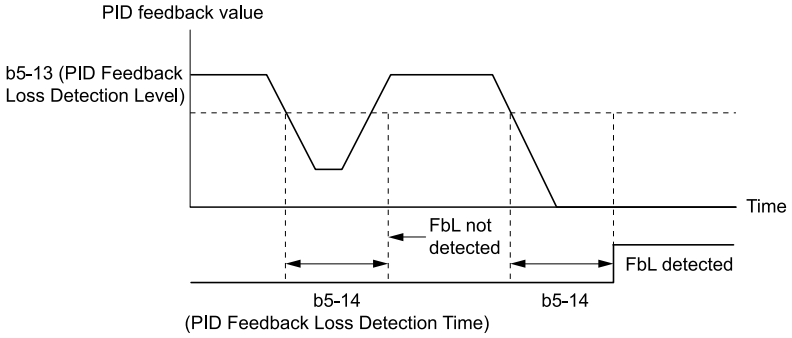

Figure 12.30 Time Chart for PID Feedback Loss Detection Time

■ PID Sleep

PID sleep stops drive operation when the PID output or the frequency reference is less than *b5-15 [Sleep Start Level]*. This function shuts off drive output after the motor decelerates to the set frequency.

The drive will automatically restart the motor when the PID output or the frequency reference is more than the *b5-15* value for the time set in *b5-16 [Sleep Delay Time]*.

This figure shows the PID Sleep function.

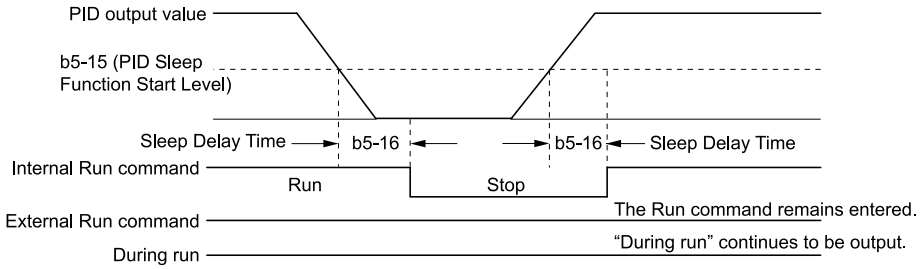

Figure 12.31 PID Sleep Time Chart

Note:
- The PID Sleep function is enabled when PID control is disabled.
- When the PID Sleep function is triggered, the drive will stop the motor as specified by *b1-03 [Stopping Method Selection]*.

■ Fine-Tuning PID

Fine-tune the following parameter settings to have PID control eliminate problems with overshoot and oscillation.

- *b5-02 [Proportional Gain (P)]*

- *b5-03 [Integral Time (I)]*
- *b5-05 [Derivative Time (D)]*
- *b5-08 [PID Primary Delay Time Constant]*

Purpose	Procedure	Results
Prevent overshoot.	• Set *b5-05 [Derivative Time (D)]* to a smaller value. • Set *b5-03 [Integral Time (I)]* to a larger value.	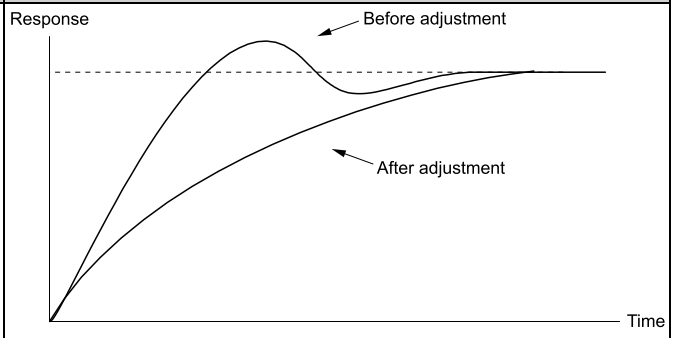
Quickly stabilize control.	• Set *b5-05 [Derivative Time (D)]* to a larger value. • Set *b5-03 [Integral Time (I)]* to a smaller value.	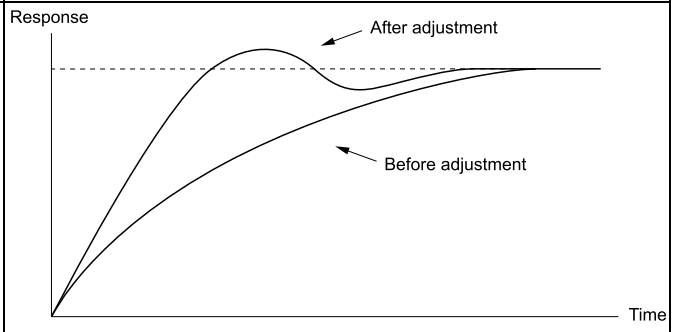
Prevent long-cycle oscillations.	Set *b5-03 [Integral Time (I)]* to a larger value.	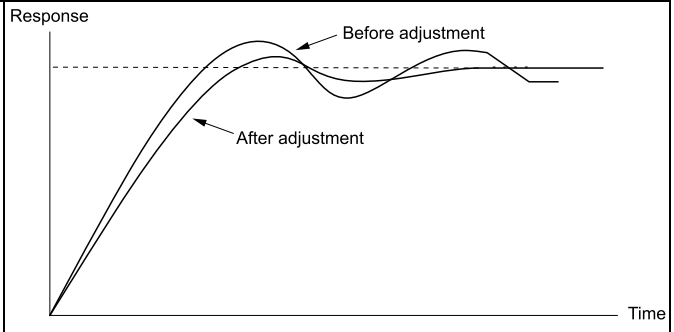
Prevent short-cycle oscillations.	• Set *b5-05 [Derivative Time (D)]* to a smaller value. • If you set *b5-05 = 0.00 [Derivative Time (D) = disabling D control]* and it does not stop oscillation, then set *b5-02 [Proportional Gain (P)]* to a smaller value or set *b5-08 [PID Primary Delay Time Constant]* to a larger value.	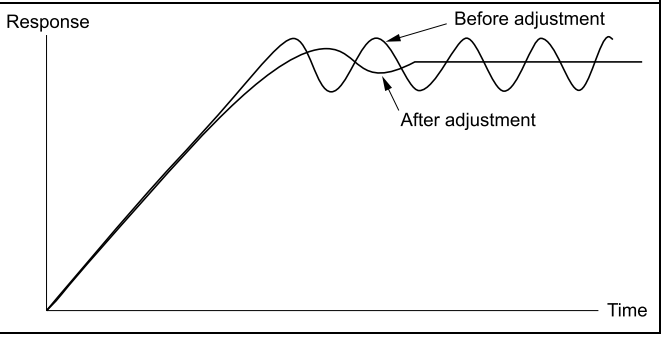

■ EZ Sleep/Wake-up Functionality

Set *b5-89 = 1 [Sleep Method Selection = EZ Sleep/Wake-up]* to enable the EZ Sleep/Wake-up function.

Note:
- When *b5-89 = 0 [Sleep Method Selection = Standard]*, the EZ Sleep function and related parameters are disabled. Parameter *b5-91 [EZsleep Min Spd]* is not included in this rule.
- Set *b5-89 = 1* to disable *b5-15 [Sleep Start Level]*.

Configuration Parameter	Description
b5-90 [EZsleep Unit]	Sets the unit of measure for *b5-92 [EZsleep Level]*. When *b5-90 = 1 [0.1Hz units]*, the setting range of *b5-91 [EZsleep Min Spd]* is 0.0 to 590.0 Hz. When *b5-90 = 0 [rpm]*, the setting range is 0 to 35400 min^{-1} (r/min). **Note:** When you change *b5-90*, the value of *b5-92* is not automatically updated.
b5-91 [EZsleep Min Spd]	This parameter sets the lower limit for PID output. The drive uses the largest value of *b5-91*, *b5-34 [PID Out Low Limit Level]*, and *d2-02 [FRef Lower Limit]* to internally set the lower limit of PID output. The *b5-89* setting does not have an effect.
b5-92 [EZsleep Level]	When the output frequency or motor speed is less than the value of *b5-92* for longer than the value of *b5-93 [EZsleep Time]*, the drive does to sleep.
b5-95 = 1 [EZsleep Wake Mode = Absolute]	When the PID feedback is less than the value of *b5-94 [EZsleep Wake Level]* for longer than the time set in *b5-96 [EZsleep Wake Time]*, the drive restarts operation from sleep.
b5-95 = 0 [EZsleep Wake Mode = Setpoint Delta]	When the PID feedback is less than the value set as the PID setpoint value minus *b5-94* for the time set in *b5-96*, the drive restarts operation from sleep.

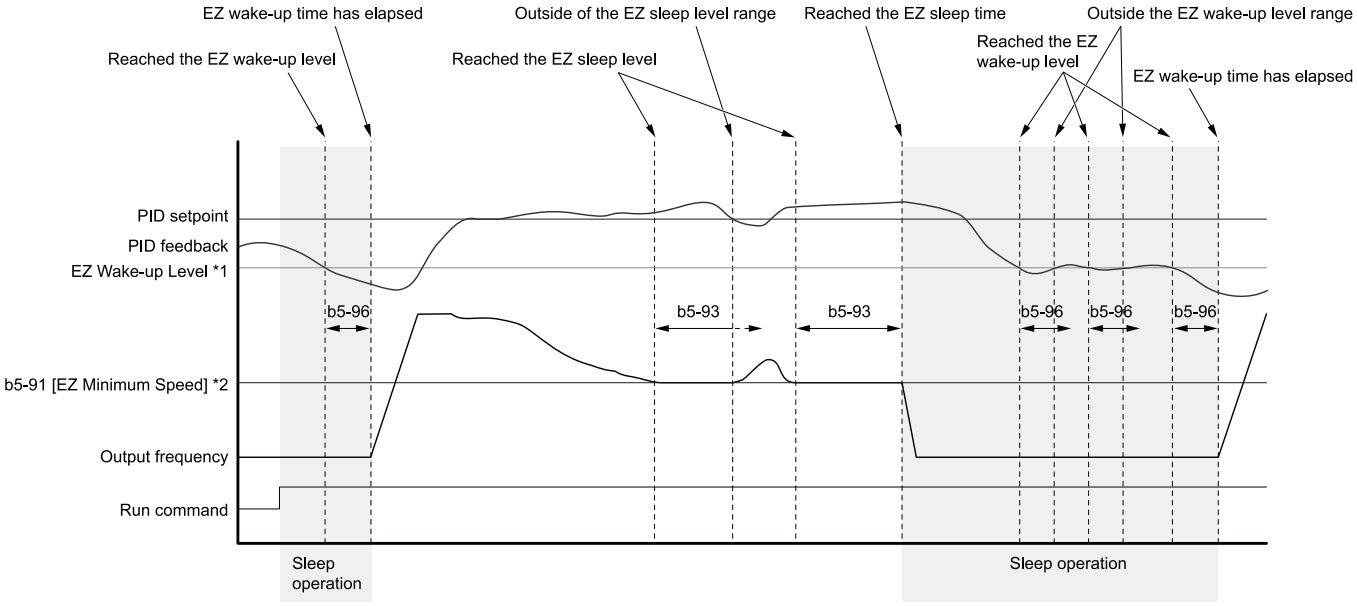

Figure 12.32 EZ Sleep/Wake-up Operation: PID Output is Normal and b5-92 = 0.0 Hz

*1 The values of *b5-94* and *b5-95* set operation.
*2 In the example, *b5-92* is at the default setting of 0.0 Hz. *b5-91* is the EZ sleep level.

■ b5-01: PID Enable

No. (Hex.)	Name	Description	Default (Range)
b5-01 (01A5)	PID Enable	V/f OLV OLV/PM AOLV/PM EZOLV Enables PID control.	0 (0, 1)

0 : Disabled

1 : Enabled

The drive does D control on the difference between the feedback value and the PID setpoint output through *U5-02 [PID Input]*.

■ b5-70: PID MainRefMode

No. (Hex.)	Name	Description	Default (Range)
b5-70 (01E5)	PID MainRefMode	V/f OLV OLV/PM AOLV/PM EZOLV Sets the PID main reference mode.	0 (0, 1)

0 : PID only

The drive does D control on the difference between the feedback value and the PID setpoint output through *U5-02 [PID Input]*.

1 : Fref + PID

The drive adds the frequency reference to the PID output. The drive does D control on the feedback output through *U5-06 [PID AdjustFeedback]*.

■ b5-71: PID Fdbk 1/2 Selection

No. (Hex.)	Name	Description	Default (Range)
b5-71 (01E6)	PID Fdbk 1/2 Selection	V/f OLV OLV/PM AOLV/PM EZOLV Selects the feedback configuration for PID control.	0 (0, 1)

0 : Feedback 1

The drive does D control on the difference between the feedback value and the PID setpoint output through *U5-01 [PID Feedback]*.

1 : Feedback 2

The drive does D control on the difference between the feedback value and the PID setpoint output through *U5-05 [PID Diff.Feedbk]*.

■ b5-72: PID D-FF Mode

No. (Hex.)	Name	Description	Default (Range)
b5-72 (01E7)	PID D-FF Mode	V/f OLV OLV/PM AOLV/PM EZOLV Determines whether the D part is in the feedback path or used for feed forward control.	0 (0, 1)

0 : D=Fdback

The drive does D control on the feedback output through *U5-06 [PID AdjustFeedback]*.

1 : D=FdFwd

The drive adds the frequency reference to the PID output. The drive does D control on the feedback output through *U5-06 [PID AdjustFeedback]*.

■ b5-02: Proportional Gain (P)

No. (Hex.)	Name	Description	Default (Range)
b5-02 (01A6) RUN	Proportional Gain (P)	V/f OLV OLV/PM AOLV/PM EZOLV Sets the proportional gain (P) that is applied to PID input.	1.00 (0.00 - 25.00)

Larger values decrease errors, but can cause oscillations. Smaller values let too much offset between the setpoint and feedback.

Set *b5-02 = 0.00* to disable P control.

■ b5-03: Integral Time (I)

No. (Hex.)	Name	Description	Default (Range)
b5-03 (01A7) RUN	Integral Time (I)	V/f OLV OLV/PM AOLV/PM EZOLV Sets the integral time (I) that is applied to PID input.	1.0 s (0.0 - 360.0 s)

Set a short integral time in *b5-03* to remove the offset more quickly. If the integral time is too short, overshoot or oscillation can occur.

Set *b5-03 = 0.00* to disable I control.

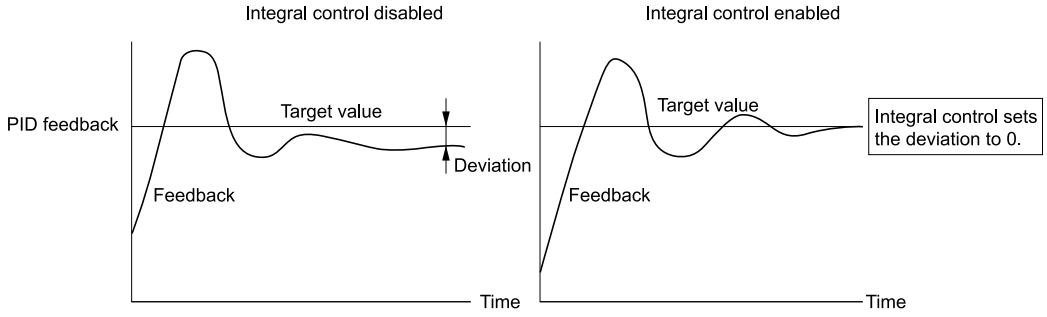

Figure 12.33 Integral Time and Deviation

■ b5-04: Integral Limit

No. (Hex.)	Name	Description	Default (Range)
b5-04 (01A8) RUN	Integral Limit	V/f OLV OLV/PM AOLV/PM EZOLV Sets the upper limit for integral control (I) as a percentage of the Maximum Output Frequency.	100.0% (0.0 - 100.0%)

Applications with loads that quickly change will cause the output of the PID function to oscillate. Set this parameter to a low value to prevent oscillation, mechanical loss, and motor speed loss.

■ b5-05: Derivative Time (D)

No. (Hex.)	Name	Description	Default (Range)
b5-05 (01A9) RUN	Derivative Time (D)	V/f OLV OLV/PM AOLV/PM EZOLV Sets the derivative time (D) for PID control. This parameter adjusts system responsiveness.	0.00 s (0.00 - 10.00 s)

When you increase the time setting, it will increase controller responsiveness, but it can also cause vibration. When you decrease the time setting, it will suppress overshoot and decrease controller responsiveness.

Set *b5-05 = 0.00* to disable D control.

■ b5-06: PID Output Limit

No. (Hex.)	Name	Description	Default (Range)
b5-06 (01AA) RUN	PID Output Limit	V/f OLV OLV/PM AOLV/PM EZOLV Sets the maximum possible output from the PID controller as a percentage of the Maximum Output Frequency.	100.0% (0.0 - 100.0%)

■ b5-07: PID Offset Adjustment

No. (Hex.)	Name	Description	Default (Range)
b5-07 (01AB) RUN	PID Offset Adjustment	V/f OLV OLV/PM AOLV/PM EZOLV Sets the offset for the PID control output as a percentage of the Maximum Output Frequency.	0.0% (-100.0 - +100.0%)

■ b5-08: PID Primary Delay Time Constant

No. (Hex.)	Name	Description	Default (Range)
b5-08 (01AC) RUN Expert	PID Primary Delay Time Constant	V/f OLV OLV/PM AOLV/PM EZOLV Sets the primary delay time constant for the PID control output. Usually it is not necessary to change this setting.	0.00 s (0.00 - 10.00 s)

Prevents resonance if there is a large quantity of mechanical friction or if rigidity is unsatisfactory. Set the value larger than the resonant frequency cycle. A value that is too large will decrease drive responsiveness.

■ b5-09: PID Output Level Selection

No. (Hex.)	Name	Description	Default (Range)
b5-09 (01AD)	PID Output Level Selection	V/f OLV OLV/PM AOLV/PM EZOLV Sets the polarity of the PID output.	0 (0, 1)

Use this parameter in applications that decrease the drive output frequency when you increase the PID setpoint.

0 : Normal output

A positive PID input increases the PID output (direct acting).

1 : Reverse output

A positive PID input decreases the PID output (reverse acting).

■ b5-10: PID Output Gain Setting

No. (Hex.)	Name	Description	Default (Range)
b5-10 (01AE) RUN	PID Output Gain Setting	V/f OLV OLV/PM AOLV/PM EZOLV Sets the amount of gain to apply to the PID output.	1.00 (0.00 - 25.00)

Applies a gain to the PID output and can help when *b5-01 = 1 [PID Enable = Enabled]* and *b5-72 = 0 [PID D-FF Mode = D=Fdback]*.

■ b5-11: PID Output Reverse Selection

No. (Hex.)	Name	Description	Default (Range)
b5-11 (01AF)	PID Output Reverse Selection	V/f OLV OLV/PM AOLV/PM EZOLV Sets the function that enables and disables reverse motor rotation for negative PID control output.	0 (0, 1)

This parameter is disabled when *b5-01 = 1 [PID Enable = Enabled]* and *b5-72 = 0 [PID D-FF Mode = D= Fdback]*. There is no limit for PID output (PID output can be positive or negative).

0 : 0 lower limit

When PID output is negative, PID output is limited to 0 and drive output is shut off.

1 : Negative lower limit

When the PID output is negative, the motor will rotate in reverse. When *b1-04 = 1 [Reverse Operation Selection = Disabled]*, the lower limit is 0.

■ b5-12: Fdback Loss Select Mode

No. (Hex.)	Name	Description	Default (Range)
b5-12 (01B0)	Fdback Loss Select Mode	V/f OLV OLV/PM AOLV/PM EZOLV Sets the drive response to PID feedback loss/excess. Sets drive operation after the drive detects PID feedback loss/excess.	0 (0 - 5)

0 : DO Only Always

The MFDO terminal set for *PID Feedback Low* or *PID Feedback High [H2-01 to H2-03 = 3E, 3F]* activates. When the drive detects feedback loss/excess, the keypad will not show an alarm and the drive will continue operation.

When the feedback signal is less than the level set in *b5-13 [Fdback Loss Lvl]* for longer than the time set in *b5-14 [Fdback Loss Time]*, the MFDO terminal set for *PID Feedback Low* activates.

When the feedback signal is more than the level set in *b5-36 [PID HiHi Limit Level]* for longer than the time set in *b5-37 [PID HiHi Time]* the MFDO terminal set for *PID Feedback High* activates.

When the feedback value is not in the detection range, the drive resets the MFDO.

1 : AL+DO Always

The drive detects *FbL [PID Feedback Loss]* and *FbH [Excessive PID Feedback]*. The MFDO terminal set for *PID Feedback Low* or *PID Feedback High [H2-01 to H2-03 = 3E, 3F]* activates. The output terminal set for *Alarm [H2-01 to H2-03 = 4]* activates and the drive continues operation.

When the feedback signal is less than the level set in *b5-13* for longer than the time set in *b5-14*, the MFDO terminal set for *PID Feedback Low* activates.

When the feedback signal is more than the level set in *b5-36* for longer than the time set in *b5-37*, the MFDO terminal set for *PID Feedback High* activates.

When the feedback value is not in the detection range, the drive resets the MFDO.

2 : FLT+DO Always

The drive detects *FbL* and *FbH*. MFDO terminal NO-CM turns ON, NC-CM turns OFF, and the motor coasts to stop.

When the feedback signal is less than the level set in *b5-13* for the time set in *b5-14*, the drive detects *FbL*.

When the feedback signal is more than the level set in *b5-36* for the time set in *b5-37*, the drive detects *FbH*.

3 : DO Only@PID Enable

The MFDO terminal set for *PID Feedback Low* or *PID Feedback High* activates. The keypad will not show an alarm. The drive continues operation.

When the MFDI terminal set to *PID Disable [H1-xx = 6A]* activates, the drive disables fault detection.

4 : AL+DO@PID Enable

The drive detects *FbL* and *FbH*. The MFDO terminal set for *PID Feedback Low* or *PID Feedback High* activates. The output terminal set for *Alarm [H2-01 to H2-03 = 4]* activates and the drive continues operation.

When the MFDI terminal set to *PID Disable [H1-xx = 6A]* activates, the drive disables fault detection.

5 : FLT+DO@PID Enable

The drive detects *FbL* and *FbH*. MFDO terminal NO-CM turns ON, NC-CM turns OFF, and the drive coasts to stop.

When the MFDI terminal set to *PID Disable [H1-xx = 6A]* activates, the drive disables fault detection.

■ b5-13: Fdback Loss Lvl

No. (Hex.)	Name	Description	Default (Range)
b5-13 (01B1)	Fdback Loss Lvl	V/f OLV OLV/PM AOLV/PM EZOLV Sets the level that triggers *PID Feedback Loss [FbL]* detection as a percentage of the Maximum Output Frequency.	0% (0 - 100%)

The drive detects *PID Feedback Loss [FbL]* when the feedback signal decreases to less than the level set in *b5-13* for longer than the time set in *b5-14 [Fdback Loss Time]*.

■ b5-14: Fdback Loss Time

No. (Hex.)	Name	Description	Default (Range)
b5-14 (01B2)	Fdback Loss Time	V/f OLV OLV/PM AOLV/PM EZOLV Sets the length of time that PID Feedback must be less than *b5-13 [Fdback Loss Lvl]* to detect *PID Feedback Loss [FbL]*.	1.0 s (0.0 - 25.5 s)

■ b5-15: Sleep Start Level

No. (Hex.)	Name	Description	Default (Range)
b5-15 (01B3)	Sleep Start Level	V/f OLV OLV/PM AOLV/PM EZOLV Sets the output level that triggers the PID Sleep function.	Determined by A1-02 (0.0 - 590.0)

The drive goes into Sleep mode when the PID output or frequency reference is less than *b5-15* for longer than the time set to *b5-16 [Sleep Delay Time]*. The drive continues operation when the PID output or frequency reference is more than *b5-15* for longer than the time set to *b5-16*.

■ b5-16: Sleep Delay Time

No. (Hex.)	Name	Description	Default (Range)
b5-16 (01B4)	Sleep Delay Time	V/f OLV OLV/PM AOLV/PM EZOLV Sets a delay time to start or stop the PID Sleep function.	0.0 s (0.0 - 25.5 s)

■ b5-17: PID Accel/Decel Time

No. (Hex.)	Name	Description	Default (Range)
b5-17 (01B5) RUN	PID Accel/Decel Time	V/f OLV OLV/PM AOLV/PM EZOLV Raises or lowers the PID setpoint using the acceleration and deceleration times set to the drive. This is a soft-starter for the PID setpoint.	0.0 s (0.0 - 6000.0 s)

The drive usually uses the acceleration and deceleration times set in *C1: ACCEL / DECEL*, but when PID control is enabled, the drive applies *C1-xx* after PID output. If you frequently change the PID setpoint, the drive responsiveness decreases. When resonance with PID control causes hunting, overshoot, or undershoot, set *b5-17* for longer acceleration and deceleration times.

Decrease *C1-xx* until hunting stops, then use *b5-17* to check the acceleration and deceleration. To enable and disable the setting in *b5-17* through an MFDI terminal, set *PID SS Cancel [H1-xx = 75]*.

■ b5-18: b5-19 PID SP Selection

No. (Hex.)	Name	Description	Default (Range)
b5-18 (01DC)	b5-19 PID SP Selection	V/f OLV OLV/PM AOLV/PM EZOLV Sets the function that enables and disables *b5-19 [PID Setpoint Value]*.	0 (0, 1)

0 : Disabled

The drive does not use the value set in *b5-19* as the PID setpoint.

1 : Enabled

The drive uses the value set in *b5-19* as the PID setpoint.

■ b5-19: PID Setpoint Value

No. (Hex.)	Name	Description	Default (Range)
b5-19 (01DD) RUN	PID Setpoint Value	V/f OLV OLV/PM AOLV/PM EZOLV Sets the PID setpoint when *b5-18 = 1 [b5-19 PID SP Selection = Enabled]*.	0.00% (0.00 - 100.00%)

■ b5-20: PID Unit Selection

No. (Hex.)	Name	Description	Default (Range)
b5-20 (01E2)	PID Unit Selection	V/f OLV OLV/PM AOLV/PM EZOLV Sets the number of digits to set and show the PID setpoint.	1 (0 - 3)

Set the units for these parameters and monitors:

- b5-19 [PID Setpoint Value]
- b5-58 [PID Setpoint 2]
- b5-59 [PID Setpoint 3]
- b5-60 [PID Setpoint 4]
- U5-01 [PID Feedback]
- U5-04 [PID Setpoint]
- U5-99 [PID Setpoint Command]

0 : 0.01Hz units

The drive uses 0.01 Hz units.

1 : 0.01% units

The drive uses 0.01% units. Set the value as a percentage of *E1-04 [Max Output Frequency]*.

2 : rpm

The drive uses 1 min^{-1} unit. Set *E2-04*, *E4-04*, or *E5-04 [PM Mot Pole Count]*.

3 : User Units

The drive uses the units set in *b5-38 [PID SP User Scale for Display]* and *b5-39 [PID SP User digits for Display]* to show the PID setpoint in *U5-01, U5-04, U5-06 [PID Feedback, PID Setpoint, PID AdjustFeedbackk]*.

■ b5-34: PID Out Low Limit Level

No. (Hex.)	Name	Description	Default (Range)
b5-34 (019F) RUN	PID Out Low Limit Level	V/f OLV OLV/PM AOLV/PM EZOLV Sets the output lower limit for the PID control as a percentage of the Maximum Output Frequency.	0.0% (-100.0 - +100.0%)

Use a lower limit to keep PID control output from dropping below a fixed level.

Set this parameter to 0.0% to disable this function.

■ b5-35: PID In Hi Limit Level

No. (Hex.)	Name	Description	Default (Range)
b5-35 (01A0) RUN	PID In Hi Limit Level	V/f OLV OLV/PM AOLV/PM EZOLV Sets the output upper limit for the PID control as a percentage of the Maximum Output Frequency.	1000.0% (0.0 - 1000.0%)

A large input value for PID control makes a high output. The drive applies this limit to the negative and positive domains.

■ b5-36: PID HiHi Limit Level

No. (Hex.)	Name	Description	Default (Range)
b5-36 (01A1)	PID HiHi Limit Level	V/f OLV OLV/PM AOLV/PM EZOLV Sets the level that triggers *Excessive PID Feedback [FbH]* as a percentage of the Maximum Output Frequency.	100% (0 - 100%)

When the feedback signal increases to more than the level set in *b5-36* for the time set in *b5-37 [PID HiHi Time]*, the drive will detect *Excessive PID Feedback [FbH]*.

■ b5-37: PID HiHi Time

No. (Hex.)	Name	Description	Default (Range)
b5-37 (01A2)	PID HiHi Time	V/f OLV OLV/PM AOLV/PM EZOLV Sets the length of time that the PID feedback signal must be more than the level set in *b5-36 [PID HiHi Limit Level]* to cause *Excessive PID Feedback [FbH]*.	1.0 s (0.0 - 25.5 s)

■ b5-38: PID SP User Scale for Display

No. (Hex.)	Name	Description	Default (Range)
b5-38 (01FE)	PID SP User Scale for Display	V/f OLV OLV/PM AOLV/PM EZOLV Sets the value that the drive sets or shows as the PID setpoint when at the maximum output frequency.	Determined by b5-20 (1 - 60000)

The drive uses this parameter and *b5-39 [PID SP User digits for Display]* together.

When *b5-20 = 3 [PID Unit Selection = User Units]*, the drive applies user-set PID setpoint and display units to these parameters and monitors:

- b5-19 [PID Setpoint Value]
- b5-58 [PID Setpoint 2]
- b5-59 [PID Setpoint 3]
- b5-60 [PID Setpoint 4]
- U5-01 [PID Feedback]
- U5-04 [PID Setpoint]
- U5-99 [PID Setpoint Command]

■ b5-39: PID SP User digits for Display

No. (Hex.)	Name	Description	Default (Range)
b5-39 (01FF)	PID SP User digits for Display	V/f OLV OLV/PM AOLV/PM EZOLV Sets the number of digits to set and show the PID setpoint.	Determined by b5-20 (0 - 3)

The drive uses this parameter and *b5-38 [PID SP User Scale for Display]* together.

When *b5-20 = 3 [PID Unit Selection = User Units]*, the drive applies user-set PID setpoint and display units to these parameters and monitors:

- b5-19 [PID Setpoint Value]
- b5-58 [PID Setpoint 2]
- b5-59 [PID Setpoint 3]
- b5-60 [PID Setpoint 4]
- U5-01 [PID Feedback]

- U5-04 [PID Setpoint]
- U5-99 [PID Setpoint Command]

0 : No Decimal Places

1 : 1 Decimal Place

2 : 2 decimal places

3 : 3 Decimal Places

■ b5-40: Fref Mon@PID

No. (Hex.)	Name	Description	Default (Range)
b5-40 (017F)	Fref Mon@PID	V/f OLV OLV/PM AOLV/PM EZOLV Sets the contents for monitor *U1-01 [Frequency Reference]* in PID control.	0 (0, 1)

0 : U1-01 with PID Output

Monitor *U1-01* shows the frequency reference that was increased or decreased by the PID output.

1 : U1-01 without PID Output

Monitor *U1-01* shows the actual frequency reference.

■ b5-47: PID Out Rev Operation Mode

No. (Hex.)	Name	Description	Default (Range)
b5-47 (017D)	PID Out Rev Operation Mode	V/f OLV OLV/PM AOLV/PM EZOLV Sets reverse motor rotation when the PID control output is negative.	1 (0, 1)

This parameter is enabled when *b5-01 = 1 [PID Enable = Enabled]*.

0 : Lower Limit is Zero

When PID output is negative, PID output is limited to 0 and drive output is shut off.

1 : Negative Output Accepted

When the PID output is negative, the motor will rotate in reverse.

■ b5-53: PID I Ramp Limit

No. (Hex.)	Name	Description	Default (Range)
b5-53 (0B8F) RUN	PID I Ramp Limit	V/f OLV OLV/PM AOLV/PM EZOLV Sets the responsiveness of PID control when the PID feedback changes quickly.	0.0 Hz (0.0 - 10.0 Hz)

Note:
- This parameter is disabled when set to 0.0 Hz.
- When *b5-53 > 0.0 Hz* and the drive enables the integrator ramp limit, the PID integrator value limit is the range set by the output frequency ± *b5-53*.
- When the PID feedback changes quickly, gradually decrease the this parameter in 0.1 Hz increments to decrease the speed of the response of PID control.

■ b5-54: PID Softstarter Selection

No. (Hex.)	Name	Description	Default (Range)
b5-54 (0BB7)	PID Softstarter Selection	V/f OLV OLV/PM AOLV/PM EZOLV Sets how the soft-starter responds to PID input/output.	0 (0, 1)

Table 12.16 shows how the soft-starter responds to PID input/output.

Table 12.16 Soft Starter and PID Input/Output

Selection	PID Frequency Reference Input	PID Frequency Reference Output	Soft Starter Input	Soft Starter Output
Soft Starter 1	Frequency Reference	Soft Starter Input	PID Frequency Reference Output	Output Frequency
Soft Starter 2	Soft Starter Output	Output Frequency	Frequency Reference	PID Frequency Reference Input

0 : Disab PID Softstart

The soft starter process occurs downstream from the PID function. The PID function input functions as the frequency reference, the PID function output functions as the soft starter input, and the soft starter output functions as the output frequency.

1 : Enab PID Softstart

The soft starter process occurs upstream from the PID function. The soft starter input functions as the frequency reference, the soft starter output functions as the PID function input, and the PID function output functions as the output frequency.

■ b5-55: PID Fback Mon Selection

No. (Hex.)	Name	Description	Default (Range)
b5-55 (0BE1)	PID Fback Mon Selection	V/f OLV OLV/PM AOLV/PM EZOLV Sets the monitor (*Ux-xx*) used as the PID Feedback. Set the *x-xx* part of the *Ux-xx [Monitor]*.	000 (000 - 999)

Note:
- You cannot select *parameter U5-xx*.
- This parameter is disabled when set to *000*.

■ b5-56: PID FdbkMon Gain

No. (Hex.)	Name	Description	Default (Range)
b5-56 (0BE2)	PID FdbkMon Gain	V/f OLV OLV/PM AOLV/PM EZOLV Sets the gain for the monitor set in *b5-55 [PID Fback Mon Selection]*.	1.00 (0.00 - 10.00)

■ b5-57: PID FdbkMon Bias

No. (Hex.)	Name	Description	Default (Range)
b5-57 (11DD)	PID FdbkMon Bias	V/f OLV OLV/PM AOLV/PM EZOLV Sets the bias for the monitor specified in *b5-55 [PID Fback Mon Selection]*.	0.00 (-10.00 - +10.00)

■ b5-58 to b5-60: PID Setpoints 2 to 4

No. (Hex.)	Name	Description	Default (Range)
b5-58 to b5-60: (1182 - 1184) RUN	PID Setpoints 2 to 4	V/f OLV OLV/PM AOLV/PM EZOLV Sets the PID setpoint when *H1-xx = 77 or 78 [MFDI Function Selection = PID SP 1, PID SP 2]*. This value is a percentage of the maximum output frequency.	0.00% (0.00 - 100.00%)

Table 12.17 shows how the different MFDI *H1-xx* values (*77 and 78*) have an effect on the PID setpoint value.

Table 12.17 Switching of MFDI and PID Setpoint Value

H1-xx = 77	H1-xx = 78	PID Setpoint Value
OFF	OFF	No switch
ON	OFF	b5-58 [PID Setpoint 2]
OFF	ON	b5-59 [PID Setpoint 3]
ON	ON	b5-60 [PID Setpoint 4]

■ b5-61: PID LoLim Select for Trim Mode

No. (Hex.)	Name	Description	Default (Range)
b5-61 (119A)	PID LoLim Select for Trim Mode	V/f OLV OLV/PM AOLV/PM EZOLV Sets the function that adjusts the PID output in relation to the frequency reference.	0 (0, 1)

0 : Disabled

Does not adjust the PID output with the frequency reference.

1 : Enabled

Adjusts the PID output in relation to the frequency reference. The setting value of *b5-62 [PID LoLim Value for Trim Mode]* sets the lower limit of the post-adjustment value. The maximum output frequency sets the upper limit.

Note:
- Set *b5-01 = 1* to enable this parameter.
- When *b5-61 = 1*, you can use this formula to adjust PID output proportional to the frequency reference:

$$U5\text{-}03 = U5\text{-}03 \times \left| \frac{Fref}{Fmax} \right|^{*1}$$

U5-03 [PID Output], *Fref [Frequency Reference]*, and *Fmax [Maximum Output Frequency]*

*1 Lower limit = *b5-62*, Upper limit = Maximum output frequency

■ b5-62: PID LoLim Value for Trim Mode

No. (Hex.)	Name	Description	Default (Range)
b5-62 (119B)	PID LoLim Value for Trim Mode	V/f OLV OLV/PM AOLV/PM EZOLV Sets the PID Trim Mode Lower Limit Value as a percentage of the maximum output frequency.	0.00% (0.00 - 100.00%)

Note:
Set *b5-01 = 1* to enable this parameter.

■ b5-63: PID DifFB Mon Selection

No. (Hex.)	Name	Description	Default (Range)
b5-63 (119C)	PID DifFB Mon Selection	V/f OLV OLV/PM AOLV/PM EZOLV Selects the monitor (*Ux-xx*) used as the PID Differential Feedback. Set the *x-xx* part of the *Ux-xx [Monitor]*.	000 (000 - 999)

Note:
- You cannot select *parameter U5-xx*.
- This parameter is disabled when set to *000*.

■ b5-64: PID DifFB Mon Gain

No. (Hex.)	Name	Description	Default (Range)
b5-64 (119D)	PID DifFB Mon Gain	V/f OLV OLV/PM AOLV/PM EZOLV Sets the gain for the monitor specified in *b5-63 [PID DifFB Mon Selection]*.	1.00 (0.00 - 10.00)

■ b5-65: PID DifFB Mon Bias

No. (Hex.)	Name	Description	Default (Range)
b5-65 (119F)	PID DifFB Mon Bias	V/f OLV OLV/PM AOLV/PM EZOLV Sets the bias for the monitor specified in *b5-63 [PID DifFB Mon Selection]*.	0.00 (-10.00 - +10.00)

■ b5-66: PID Fback Mon Level

No. (Hex.)	Name	Description	Default (Range)
b5-66 (11DE)	PID Fback Mon Level	V/f OLV OLV/PM AOLV/PM EZOLV Sets the signal level for the monitor specified in *b5-55 [PID Fback Mon Selection]*.	0 (0, 1)

0 : Absolute

1 : Bi-directional (+/-)

■ b5-67: PID DifFB Mon Level

No. (Hex.)	Name	Description	Default (Range)
b5-67 (11DF)	PID DifFB Mon Level	V/f OLV OLV/PM AOLV/PM EZOLV Sets the signal level for the monitor specified in *b5-63 [PID DifFB Mon Selection]*.	0 (0, 1)

0 : Absolute

1 : Bi-directional (+/-)

■ b5-89: Sleep Method Selection

No. (Hex.)	Name	Description	Default (Range)
b5-89 (0B89) RUN	Sleep Method Selection	V/f OLV OLV/PM AOLV/PM EZOLV Sets sleep and wake up operation when using PID.	0 (0, 1)

0 : Standard

1 : EZ Sleep/Wake-up

■ b5-90: EZsleep Unit

No. (Hex.)	Name	Description	Default (Range)
b5-90 (0B90)	EZsleep Unit	V/f OLV OLV/PM AOLV/PM EZOLV Sets the measurement units for *b5-91 [EZsleep Min Spd]* and *b5-92 [EZsleep Level]*.	0 (0, 1)

0 : rpm

1 : 0.1Hz units

■ b5-91: EZsleep Min Spd

No. (Hex.)	Name	Description	Default (Range)
b5-91 (0B91) RUN	EZsleep Min Spd	V/f OLV OLV/PM AOLV/PM EZOLV Sets the minimum speed for the EZ Sleep/Wakeup function. This parameter uses the largest value from *b5-91*, *b5-34 [PID Out Low Limit Level]*, and *d2-02 [FRef Lower Limit]*.	0.0 Hz or 0 min^{-1} (r/min) (0.0 to 590.0 Hz or 0 to 35400 min^{-1} (r/min))

Note:

The value of *b5-90 [b5-91: EZsleep Unit]* sets the units. When *b5-90* changes, this parameter does not automatically update. Set this parameter again after you change *b5-90* is changed.

■ b5-92: EZsleep Level

No. (Hex.)	Name	Description	Default (Range)
b5-92 (0B92) RUN	EZsleep Level	V/f OLV OLV/PM AOLV/PM EZOLV Sets the value that the output frequency or motor speed must be less than for longer than *b5-93 [EZsleep Time]* to enter Sleep Mode.	0.0 Hz or 0 min^{-1} (r/min) (0.0 to 590.0 Hz or 0 to 35400 min^{-1} (r/min))

Note:

When *b5-90 [EZsleep Unit]* changes, this parameter does not automatically update. Set this parameter again after you change *b5-90*.

■ b5-93: EZsleep Time

No. (Hex.)	Name	Description	Default (Range)
b5-93 (0B93) RUN	EZsleep Time	V/f OLV OLV/PM AOLV/PM EZOLV Sets the length of time that the output frequency or motor speed must be less than *b5-92 [EZsleep Level]* to enter Sleep Mode.	5.0 s (0.0 - 1000.0 s)

■ b5-94: EZsleep Wake Level

No. (Hex.)	Name	Description	Default (Range)
b5-94 (0B94) RUN	EZsleep Wake Level	V/f OLV OLV/PM AOLV/PM EZOLV Sets the level at which the drive resumes operation when exiting Sleep Mode.	0.00% (0.00 - 600.00%)

Note:

The values of *b5-20 [PID Unit Selection]*, *b5-38 [PID SP User Scale for Display]*, and *b5-39 [PID SP User digits for Display]* set the units. When *b5-20*, *b5-38*, and *b5-39* change, this parameter does not automatically update. Set this parameter again after you change *b5-20*, *b5-38*, and *b5-39* are changed.

- When *b5-95 = 1 [EZsleep Wake Mode = Absolute]*:
  When *b5-09 = 0 [PID Output Level Selection = Normal output]*, and the PID Feedback *[H3-xx = F]* is less than the value of *b5-94* for a time longer than the value of *b5-96 [EZsleep Wake Time]*, the drive will exit sleep and

start operation again. When *b5-09 = 1 [Reverse output]*, and the PID feedback is more than setting value of *b5-94* for a time longer than the setting value of *b5-96*, the drive will exit sleep and start operation again.

- When *b5-95 = 0 [Setpoint Delta]*:
  When *b5-09 = 0*, and the PID feedback is less than the value of "PID setpoint value - *b5-94*" for a time longer than the value of *b5-96*, the drive will exit sleep and start operation again. When *b5-09 = 1*, and the PID feedback is more than the value of "PID setpoint value + *b5-94*" for a time longer than the setting value of *b5-96*, the drive will exit sleep and start operation again.

■ b5-95: EZsleep Wake Mode

No. (Hex.)	Name	Description	Default (Range)
b5-95 (0B95)	EZsleep Wake Mode	V/f OLV OLV/PM AOLV/PM EZOLV Sets the wake-up mode to use when exiting Sleep Mode.	0 (0, 1)

0 : Setpoint Delta

1 : Absolute

■ b5-96: EZsleep Wake Time

No. (Hex.)	Name	Description	Default (Range)
b5-96 (0B96) RUN	EZsleep Wake Time	V/f OLV OLV/PM AOLV/PM EZOLV Sets the EZ Wake-up time.	1.0 s (0.0 - 1000.0 s)

When the PID feedback is less than the value of *b5-94 [EZsleep Wake Level]* continuously for the time set in *b5-96*, the drive will exit sleep and start operation again.

◆ b6: DWELL FUNCTION

The Dwell function momentarily holds the output frequency at start and stop.

This prevents motor speed loss when you start and stop heavy loads. The Dwell function is also enabled when backlash on the machine side causes sudden movement at the start of acceleration and deceleration.

At the start of acceleration, the drive uses the output frequency and acceleration time set for the Dwell function to automatically operate at low speed to minimize the effects of backlash. Then, the drive can accelerate again. The Dwell function operates the same for deceleration.

For conveyor applications, the Dwell function also lets the drive interlock the output frequency and a delay time for the holding brake on the load side.

The Dwell function momentarily stops during acceleration to prevent a PM motor from stepping out. Figure 12.34 shows how the Dwell function works.

Note:

When you use the Dwell function at stop, set *b1-03 = 0 [Stopping Method Selection = Ramp->Stop]*.

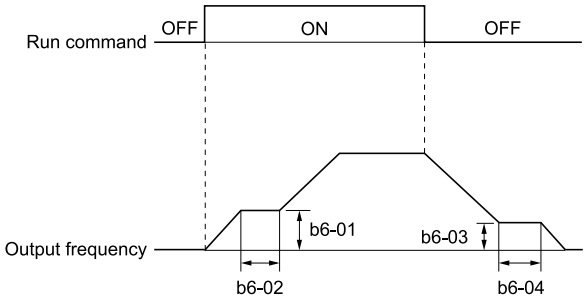

Figure 12.34 Time Chart for the Dwell Function at Start/Stop

■ b6-01: Dwell Ref.@Start

No. (Hex.)	Name	Description	Default (Range)
b6-01 (01B6)	Dwell Ref.@Start	V/f OLV OLV/PM AOLV/PM EZOLV Sets the output frequency that the drive will hold momentarily when the motor starts.	0.0 (Determined by A1-02)

When the drive accelerates to the output frequency set in *b6-01*, it holds that frequency for the time set in *b6-02 [Dwell Time@Start]*, and starts to accelerate again.

■ b6-02: Dwell Time@Start

No. (Hex.)	Name	Description	Default (Range)
b6-02 (01B7)	Dwell Time@Start	V/f OLV OLV/PM AOLV/PM EZOLV Sets the length of time that the drive will hold the output frequency when the motor starts.	0.0 s (0.0 - 10.0 s)

■ b6-03: Dwell Ref@Stop

No. (Hex.)	Name	Description	Default (Range)
b6-03 (01B8)	Dwell Ref@Stop	V/f OLV OLV/PM AOLV/PM EZOLV Sets the output frequency that the drive will hold momentarily when ramping to stop the motor.	0.0 (Determined by A1-02)

When the drive decelerates to the output frequency set in *b6-03*, it holds that frequency for the time set in *b6-04 [Dwell Time@Stop]* and starts to decelerate again.

■ b6-04: Dwell Time@Stop

No. (Hex.)	Name	Description	Default (Range)
b6-04 (01B9)	Dwell Time@Stop	V/f OLV OLV/PM AOLV/PM EZOLV Sets the length of time for the drive to hold the output frequency when ramping to stop the motor.	0.0 s (0.0 - 10.0 s)

◆ b8: ENERGY SAVING

Energy-saving control improves overall system operating efficiency by operating the motor at its most efficient level.

Set *b8-01* and these parameters according to the control method and the motor.

- When you use V/f Control, set parameters *b8-04 to b8-06*.
- When you use vector control with an induction motor, set parameters *b8-02 and b8-03*.
- When you use a PM motor, set parameters *b8-16 and b8-17*.

Note:
- Energy-saving control is not appropriate for applications with sudden changes in the load, or applications driving heavy loads such as a traverse car application.
- Energy-saving control maximizes operation based on precise motor data set to the drive. Make sure that you do Auto-Tuning and enter the correct information about the motor before you use the Energy-saving control.

■ b8-01: eSave Ctrl Selection

No. (Hex.)	Name	Description	Default (Range)
b8-01 (01CC)	eSave Ctrl Selection	V/f OLV OLV/PM AOLV/PM EZOLV Sets the Energy-saving control function.	0 (0 - 2)

0 : Disabled

1 : Enabled

2 : Search Enabled

Note:

When *A1-02 = 6 [Control Method = PM AOLVector]*, you can only select setting *2* in Expert Mode.

■ b8-02: eSave Ctrl Gain

No. (Hex.)	Name	Description	Default (Range)
b8-02 (01CD) RUN Expert	eSave Ctrl Gain	V/f OLV OLV/PM AOLV/PM EZOLV Sets the gain for Energy-saving control.	Determined by A1-02 (0.0 - 10.0)

Increase the setting value to increase energy saving. If the setting value is too large, the motor will stall.

■ b8-03: eSave Filter Time

No. (Hex.)	Name	Description	Default (Range)
b8-03 (01CE) RUN Expert	eSave Filter Time	V/f OLV OLV/PM AOLV/PM EZOLV Sets the responsiveness for Energy-saving control.	Determined by A1-02, C6-01 and o2-04 (0.00 - 10.00 s)

Decrease the setting value to increase responsiveness. If the setting value is too low, operation will not be stable.

■ b8-04: eSave Coef. Value

No. (Hex.)	Name	Description	Default (Range)
b8-04 (01CF) Expert	eSave Coef. Value	V/f OLV OLV/PM AOLV/PM EZOLV Sets the Energy-saving control coefficient to maintain maximum motor efficiency. The default setting is for Yaskawa motors.	Determined by C6-01, E2-11, and o2-04 (0.00 - 655.00)

When you use a motor from a different manufacturer, increase the setting value in 5% increments to find the minimum value for *U1-08 [Output Power]* at light loads.

When you decrease the setting value, it decreases the output voltage and decreases power consumption. If the setting value is too low, the motor will stall.

Note:

When you do Rotational Auto-Tuning, the drive will automatically set the energy-saving coefficient.

■ b8-05: Power Det.Filter Time

No. (Hex.)	Name	Description	Default (Range)
b8-05 (01D0) Expert	Power Det.Filter Time	V/f OLV OLV/PM AOLV/PM EZOLV Sets the time constant to measure output power.	20 ms (0 - 2000 ms)

Decrease the setting value to increase responsiveness to load changes. If you set the value too low during operation at light loads, motor speed is not stable.

■ b8-06: Srch Op.Volt Limit

No. (Hex.)	Name	Description	Default (Range)
b8-06 (01D1) Expert	Srch Op.Volt Limit	V/f OLV OLV/PM AOLV/PM EZOLV Sets the voltage limit for Search Operation as a percentage of the motor rated voltage.	0% (0 - 100%)

The Search Operation changes the output voltage in small increments to find a setpoint at which the drive can use minimum power to operate.

Set this parameter to 0 to disable Search Operation. This will not disable Energy-saving control.

If the setting value is too low, the motor will stall when loads suddenly increase.

■ b8-16: PM eSave Coef.Ki

No. (Hex.)	Name	Description	Default (Range)
b8-16 (01F8) Expert	PM eSave Coef.Ki	V/f OLV OLV/PM AOLV/PM EZOLV Sets torque linearity. This parameter uses the Ki value from the motor nameplate. Usually it is not necessary to change this setting.	1.00 (0.00 - 3.00)

When *b8-16 = 1.00* (default), the drive will automatically calculate and control the energy-saving coefficient. If the motor nameplate has a description for "Ki", set this parameter to the Ki value.

Do this procedure to prevent oscillation when you set *b8-01 = 1 [eSave Ctrl Selection = Enabled]*.

1. Check *U5-21 [Energy Save Ki Coeff]* and make sure that it aligns with the Ki value on the motor nameplate.
2. If the numbers are different, set *b8-16* to the Ki value on the motor nameplate.

■ b8-17: PM eSave Coef.Kt

No. (Hex.)	Name	Description	Default (Range)
b8-17 (01F9) Expert	PM eSave Coef.Kt	V/f OLV OLV/PM AOLV/PM EZOLV Sets torque linearity. This parameter uses the Kt value from the motor nameplate. Usually it is not necessary to change this setting.	1.00 (0.00 - 3.00)

When *E5-01 = 1xxx [PM Mot Code Selection = Yaskawa SSR1 series IPM motor]*, the drive automatically calculates the energy-saving coefficient Kt and uses that value to control operation.

Do this procedure to prevent oscillation when you set *b8-01 = 1 [eSave Ctrl Selection = Enabled]*.

1. Check *U5-22 [Energy Save Kt Coeff]* and make sure that it aligns with the Kt value on the motor nameplate.
2. If the numbers are different, set *b8-17* to the Kt value on the motor nameplate.

■ b8-18: eSave d-Axis Filter Time

No. (Hex.)	Name	Description	Default (Range)
b8-18 (01FA) Expert	eSave d-Axis Filter Time	V/f OLV OLV/PM AOLV/PM EZOLV Sets the d-axis current reference filter time constant.	0.100 s (0.000 - 5.000 s)

■ b8-19: eSave Search Frequency

No. (Hex.)	Name	Description	Default (Range)
b8-19 (0B40) Expert	eSave Search Frequency	V/f OLV OLV/PM AOLV/PM EZOLV Sets the frequency of Energy-saving control search operations. Usually it is not necessary to change this setting.	Determined by A1-02 (10 - 300 Hz)

Note:
- If low inertia causes vibration in the machine, increase the setting value in 10 Hz increments and check the response. If *A1-02 = 8 [Control Method = EZ Vector]*, increase the setting value in 1 Hz increments.
- To make the motor more efficient, decrease the setting value in 1 Hz increments until the point immediately before machine vibration starts to occur.

■ b8-20: PM eSave Width for Test

No. (Hex.)	Name	Description	Default (Range)
b8-20 (0B41) Expert	PM eSave Width for Test	V/f OLV OLV/PM AOLV/PM EZOLV Sets the amplitude of Energy-saving control search operations.	1.0 degrees (0.1 - 5.0 degrees)

An increase in the value can make the operational efficiency better. However, if the load inertia is small, it may be necessary to adjust the value to prevent machine vibration.

Note:
- If low inertia causes vibration in the machine, decrease the setting value in 1.0-degree increments and check the response.
- To make the motor more efficient, increase the setting value in 1.0-degreee increments until the point immediately before machine vibration starts to occur.

■ b8-21: PM eSave Gain for Test

No. (Hex.)	Name	Description	Default (Range)
b8-21 (0B42) Expert	PM eSave Gain for Test	V/f OLV OLV/PM AOLV/PM EZOLV Sets the gain of Energy-saving control search operations.	0.3Hz (0.1 - 20.0 Hz)

When you decrease the value of *C5-01 [ASR PGain 1]*, also decrease the value of *b8-21* to keep the correct ratio.

■ b8-22: PM eSave LPF Cutoff Frq

No. (Hex.)	Name	Description	Default (Range)
b8-22 (0B43) Expert	PM eSave LPF Cutoff Frq	V/f OLV OLV/PM **AOLV/PM** EZOLV Sets the frequency of the filter used to extract the high-efficiency phase from search operations. Usually it is not necessary to change this setting.	10.0 Hz (1.0 - 30.0 Hz)

■ b8-23: PM eSave Srch Limit

No. (Hex.)	Name	Description	Default (Range)
b8-23 (0B44) Expert	PM eSave Srch Limit	V/f OLV OLV/PM **AOLV/PM** EZOLV Sets the search operations output limit. Usually it is not necessary to change this setting.	15.0 degrees (0.0 - 30.0 degrees)

When the motor characteristics are correct, increase this value to make the motor more efficient.

■ b8-24: PM eSave HiF Gain for ACR

No. (Hex.)	Name	Description	Default (Range)
b8-24 (0B45) Expert	PM eSave HiF Gain for ACR	V/f OLV OLV/PM **AOLV/PM** EZOLV Sets the gain for high-frequency current control.	200.0 Hz (100.0 - 1000.0 Hz)

Note:
If the drive detects *oC [Overcurrent]*, decrease the value.

■ b8-25: PM eSave Srch Start Level

No. (Hex.)	Name	Description	Default (Range)
b8-25 (0B46) Expert	PM eSave Srch Start Level	V/f OLV OLV/PM **AOLV/PM** EZOLV Sets the start level for search operations.	10.0% (0.0 - 100.0%)

Note:
If there is vibration in the machine, increase the value.

■ b8-26: PM eSave Pwr SP Setpoint

No. (Hex.)	Name	Description	Default (Range)
b8-26 (0B47) Expert	PM eSave Pwr SP Setpoint	V/f OLV OLV/PM **AOLV/PM** EZOLV Sets a value to increase torque accuracy.	0.0% (-10.0 - +10.0%)

■ b8-28: OverExc Action Selection

No. (Hex.)	Name	Description	Default (Range)
b8-28 (0B8B) Expert	OverExc Action Selection	V/f OLV OLV/PM AOLV/PM **EZOLV** Sets the function for excitation operation.	0 (0, 1)

When operation is not stable at low speeds, set this parameter to 1 to enable the function.

0 : Disabled

1 : Enabled

■ b8-29: eSave Priority Mode

No. (Hex.)	Name	Description	Default (Range)
b8-29 (0B8C)	eSave Priority Mode	V/f OLV OLV/PM AOLV/PM **EZOLV** Sets the priority of drive response between changes to the load or Energy-saving control. Enable this to prioritize energy-saving control. Disable this to prioritize tracking related to fast load changes, and prevent motor stall.	0 (0, 1)

Enable this parameter when there are small changes in the load. It is possible that the motor cannot respond correctly to changes in the load.

0 : Priority: Drive Response

1 : Priority: Energy Savings

12.3 C: TUNING

C parameters adjust drive operation, including:

- Acceleration Time
- Deceleration Time
- Slip Compensation
- Torque Compensation
- Carrier Frequency

◆ C1: ACCEL / DECEL

You can set four different acceleration and deceleration time pairs in the drive. When you activate and deactivate H1-xx = 18, 19, 61 [MFDI Function Select = Ac/Dec Time1, Ac/Dec Time2, Motor 2 Select], you can switch acceleration and deceleration times during run.

Acceleration time parameters always set the time to accelerate from 0 Hz to *E1-04 [Max Output Frequency]*. Deceleration time parameters always set the time to decelerate from *E1-04* to 0 Hz.

C1-01 [Accel Time 1] and *C1-02 [Decel Time 1]* are the default active accel/decel settings.

Parameter	Range
C1-01 [Accel Time 1]	0.0 to 6000.0 s
C1-02 [Decel Time 1]	
C1-03 [Accel Time 2]	
C1-04 [Decel Time 2]	
C1-05 [Accel Time 3]	
C1-06 [Decel Time 3]	
C1-07 [Accel Time 4]	
C1-08 [Decel Time 4]	

Note:
The setting range for acceleration and deceleration times is *0.00 to 600.00 s* when *C1-10 = 0 [Ac/Dec Units = 0.01s]*.

■ Use MFDIs to Switch Acceleration Times

Table 12.18 shows the different acceleration and deceleration times.

Table 12.18 Accel/Decel Times and Active Parameters

H1-xx = 18 [Ac/Dec Time1]	H1-xx = 19 [Ac/Dec Time2]	Active Parameter	
		Acceleration Time	Deceleration Time
OFF	OFF	C1-01 [Accel Time 1]	C1-02 [Decel Time 1]
ON	OFF	C1-03 [Accel Time 2]	C1-04 [Decel Time 2]
OFF	ON	C1-05 [Accel Time 3]	C1-06 [Decel Time 3]
ON	ON	C1-07 [Accel Time 4]	C1-08 [Decel Time 4]

Figure 12.35 shows an operation example to change acceleration and deceleration times. It is necessary to set *b1-03 = 0 [Stopping Method Selection = Ramp->Stop]* for this example.

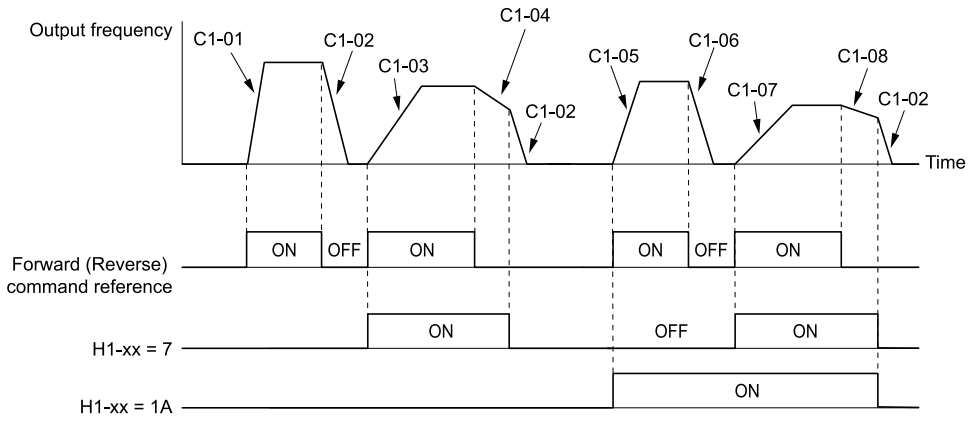

Figure 12.35 Timing Diagram of Acceleration and Deceleration Times

■ Use Motor Selection to Switch Acceleration and Deceleration Times

When you set *H1-xx = 61 [MFDI Function Select = Motor 2 Select]*, you can activate and deactivate the input terminal to switch between motor 1 and motor 2.

Note:

You cannot use the Motor 2 Selection function with PM motors.

Table 12.19 shows the possible acceleration and deceleration time combinations when you use the Motor 2 Selection function.

Table 12.19 Motor Selection and Acceleration and Deceleration Times

H1-xx = 18 [Ac/Dec Time1]	H1-xx = 61 [Motor 2 Select]			
	Motor 2 Selection: OFF		Motor 2 Selection: ON	
	Acceleration Time	Deceleration Time	Acceleration Time	Deceleration Time
OFF	C1-01	C1-02	C1-05	C1-06
ON	C1-03	C1-04	C1-07	C1-08

■ Use Output Frequency Level to Switch Acceleration and Deceleration Times

The drive can use output frequency to automatically switch between different acceleration and deceleration times. When the output frequency = *C1-11 [Accel/Decel Time Switchover Freq]*, the drive automatically switches the acceleration and deceleration times. Set *C1-11 = 0.0 Hz* to disable this function.

Note:

- Acceleration and deceleration times set to MFDIs are more important than the automatic switch using the frequency level set in *C1-11*. For example, if you set the switchover frequency to *C1-11*, the drive will not automatically switch acceleration and deceleration times when the MFDI terminal set for *Ac/Dec Time1 [H1-xx = 18]* is activated.
- If *Motor 2 Select [H1-xx = 61]* is activated, the drive will set the acceleration/deceleration time to *C1-05* and *C1-06* for motor 2 when the output frequency is more than the frequency level set in *C1-11*.

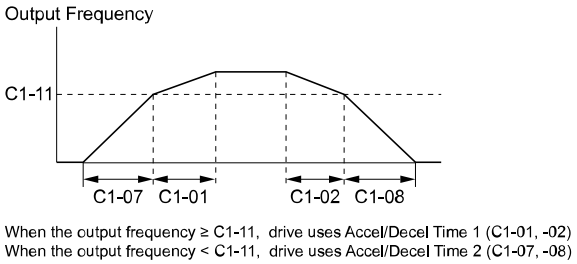

Figure 12.36 Accel/Decel Time Switching Frequency

■ C1-01: Accel Time 1

No. (Hex.)	Name	Description	Default (Range)
C1-01 (0200) RUN	Accel Time 1	V/f OLV OLV/PM AOLV/PM EZOLV Sets the length of time to accelerate from zero to maximum output frequency.	10.0 s (0.0 - 6000.0 s)

Note:
When *C1-10 = 0 [Ac/Dec Units = 0.01s]*, the setting range is 0.00 to 600.00 s.

■ C1-02: Decel Time 1

No. (Hex.)	Name	Description	Default (Range)
C1-02 (0201) RUN	Decel Time 1	V/f OLV OLV/PM AOLV/PM EZOLV Sets the length of time to decelerate from maximum output frequency to zero.	10.0 s (0.0 - 6000.0 s)

Note:
When *C1-10 = 0 [Ac/Dec Units = 0.01s]*, the setting range is 0.00 to 600.00 s.

■ C1-03: Accel Time 2

No. (Hex.)	Name	Description	Default (Range)
C1-03 (0202) RUN	Accel Time 2	V/f OLV OLV/PM AOLV/PM EZOLV Sets the length of time to accelerate from zero to maximum output frequency.	10.0 s (0.0 - 6000.0 s)

Note:
When *C1-10 = 0 [Ac/Dec Units = 0.01s]*, the setting range is 0.00 to 600.00 s.

■ C1-04: Decel Time 2

No. (Hex.)	Name	Description	Default (Range)
C1-04 (0203) RUN	Decel Time 2	V/f OLV OLV/PM AOLV/PM EZOLV Sets the length of time to decelerate from maximum output frequency to zero.	10.0 s (0.0 - 6000.0 s)

Note:
When *C1-10 = 0 [Ac/Dec Units = 0.01s]*, the setting range is 0.00 to 600.00 s.

■ C1-05: Accel Time 3

No. (Hex.)	Name	Description	Default (Range)
C1-05 (0204) RUN	Accel Time 3	V/f OLV OLV/PM AOLV/PM EZOLV Sets the length of time to accelerate from zero to maximum output frequency.	10.0 s (0.0 - 6000.0 s)

Note:
When *C1-10 = 0 [Ac/Dec Units = 0.01s]*, the setting range is 0.00 to 600.00 s.

■ C1-06: Decel Time 3

No. (Hex.)	Name	Description	Default (Range)
C1-06 (0205) RUN	Decel Time 3	V/f OLV OLV/PM AOLV/PM EZOLV Sets the length of time to decelerate from maximum output frequency to zero.	10.0 s (0.0 - 6000.0 s)

Note:
When *C1-10 = 0 [Ac/Dec Units = 0.01s]*, the setting range is 0.00 to 600.00 s.

■ C1-07: Accel Time 4

No. (Hex.)	Name	Description	Default (Range)
C1-07 (0206) RUN	Accel Time 4	V/f OLV OLV/PM AOLV/PM EZOLV Sets the length of time to accelerate from zero to maximum output frequency.	10.0 s (0.0 - 6000.0 s)

Note:
When *C1-10 = 0 [Ac/Dec Units = 0.01s]*, the setting range is 0.00 to 600.00 s.

■ C1-08: Decel Time 4

No. (Hex.)	Name	Description	Default (Range)
C1-08 (0207) RUN	Decel Time 4	V/f OLV OLV/PM AOLV/PM EZOLV Sets the length of time to decelerate from maximum output frequency to zero.	10.0 s (0.0 - 6000.0 s)

Note:
When *C1-10 = 0 [Ac/Dec Units = 0.01s]*, the setting range is 0.00 to 600.00 s.

■ C1-09: Fast Stop Time

No. (Hex.)	Name	Description	Default (Range)
C1-09 (0208) RUN	Fast Stop Time	V/f OLV OLV/PM AOLV/PM EZOLV Sets the length of time that the drive will decelerate to zero for a Fast Stop.	10.0 s (0.0 - 6000.0 s)

Note:
- When *C1-10 = 0 [Ac/Dec Units = 0.01s]*, the setting range is 0.00 to 600.00 s.
- When *L2-29 = 1 [KEB Method = Single KEB1 Ride-Thru]* and you do KEB Auto-Tuning, the drive will automatically set *C1-09*. If you must not change the Fast Stop time, do not do KEB Auto-Tuning.

The Fast Stop function will be triggered in the following circumstances.

- The Fast Stop operation will be triggered by the input of the Fast Stop command via the multi-function digital input terminal.
- The Fast Stop operation is will be triggered when by the input of the Fast Stop command is input via the multi-function digital input terminal.

Set *H1-xx = 34, 35 [MFDI Function Select = Fast Stop NO, Fast Stop NC]*.

When the Fast Stop command is input, the Fast Stop operation will be triggered at the deceleration time set to *C1-09*. The drive cannot be restarted after initiating a Fast Stop operation until deceleration is complete. Complete deceleration and cycle the Run command to clear the Fast Stop input.

The terminal set for *H2-xx = 17 [MFDO Function Select = @Fast Stop]* will be ON during Fast Stop.

Note:
Decelerating too quickly can cause an *ov [Overvoltage]* fault that shuts off the drive while the motor to coasts to a stop. Set a Fast Stop time in *C1-09* that prevents motor coasting and makes sure that the motor stops quickly and safely.

■ C1-10: Ac/Dec Units

No. (Hex.)	Name	Description	Default (Range)
C1-10 (0209)	Ac/Dec Units	V/f OLV OLV/PM AOLV/PM EZOLV Sets the setting units for *C1-01 to C1-08 [Accel Time 1 to Decel Time 4]*, *C1-09 [Fast Stop Time]*, *L2-06 [KEB Decel Time]*, and *L2-07 [KEB Accel Time]*.	1 (0, 1)

0 : 0.01s

Sets acceleration and deceleration times in 0.01 s units. The setting range is 0.0 to 6000.0 s.

If one of these parameters is set to 1000.0 s or longer, you cannot set *C1-10 = 0*:

- *C1-01 to C1-09*
- *L2-06*
- *L2-07*

When one of those parameters is set to a value between 600.1 s and 1000.0 s, you can set *C1-10 = 0*, but the time will change to 600.00 s.

1 : 0.1s

Sets acceleration and deceleration times in 0.1 s units. The setting range is 0.0 to 6000.0 s.

■ C1-11: Ac/Dec Switch Frequency

No. (Hex.)	Name	Description	Default (Range)
C1-11 (020A)	Ac/Dec Switch Frequency	V/f OLV OLV/PM AOLV/PM EZOLV Sets the frequency at which the drive will automatically change acceleration and deceleration times.	Determined by A1-02 (0.0 - 590.0 Hz)

When output frequency get *C1-11* value, the drive automatically switches the acceleration and deceleration times. Set this parameter to *0.0* to disable this function.

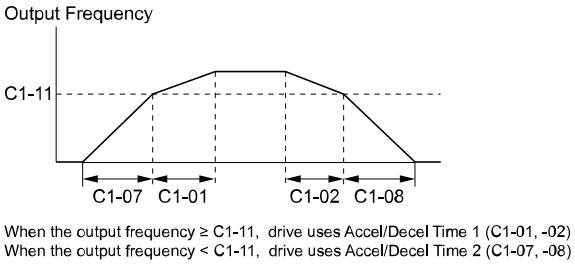

Figure 12.37 Accel/Decel Time Switching Frequency

Table 12.20 lists the possible combinations of acceleration and deceleration time switchover frequencies and the acceleration times for the Motor 2 Selection function.

Table 12.20 Motor and Acceleration and Deceleration Time Combination

C1-11	Motor 1		Motor 2	
	Acceleration Time	Deceleration Time	Acceleration Time	Deceleration Time
Less than the setting value	C1-07 [Accel Time 4]	C1-08 [Decel Time 4]	C1-07 [Accel Time 4]	C1-08 [Decel Time 4]
Equal to or more than the setting value	C1-01 [Accel Time 1]	C1-02 [Decel Time 1]	C1-05 [Accel Time 3]	C1-06 [Decel Time 3]

■ C1-14: Ac/Dec Base Frequency

No. (Hex.)	Name	Description	Default (Range)
C1-14 (0264) RUN	Ac/Dec Base Frequency	V/f OLV OLV/PM AOLV/PM EZOLV Sets the base frequency used to calculate acceleration and deceleration rates.	0.0 Hz (0.0 - 590.0 Hz)

The acceleration and deceleration rates set in *C1-01 to C1-09 [Accel Time 1 to Decel Time 4, Fast Stop Time]* will change when the value of *C1-14* changes.

- When *C1-14 = 0.0 Hz*
  - *C1-01, C1-03, C1-05, C1-07 [Accel Time 1 to Accel Time 4]:* Time to accelerate from 0 Hz to *E1-04 [Max Output Frequency]*
  - *C1-02, C1-04, C1-06, C1-08 [Decel Time 1 to Decel Time 4]:* Time to decelerate from *E1-04* to 0 Hz.

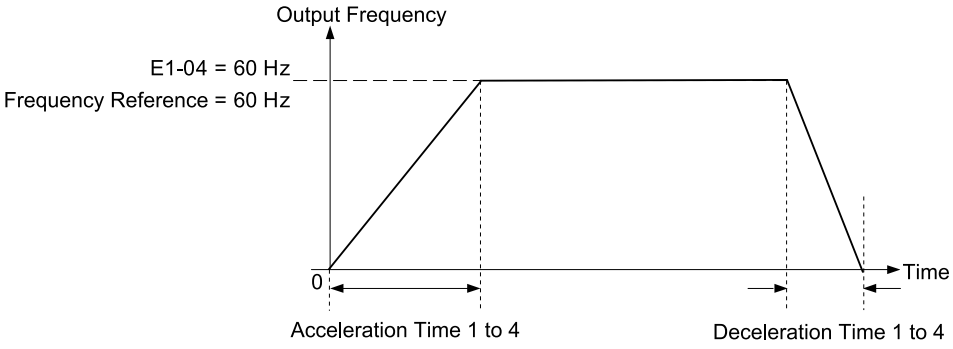

Figure 12.38 Example 1: Acceleration/Deceleration Rate (When C1-14 = 0 Hz, E1-04 = 60 Hz, and the Frequency Reference is 60 Hz)

- When *C1-14 ≠ 0.0 Hz*
  - *C1-01, C1-03, C1-05, C1-07:* Time to accelerate from 0 Hz to *C1-14*
  - *C1-02, C1-04, C1-06, C1-08, C1-09:* Time to decelerate from *C1-14* to 0 Hz

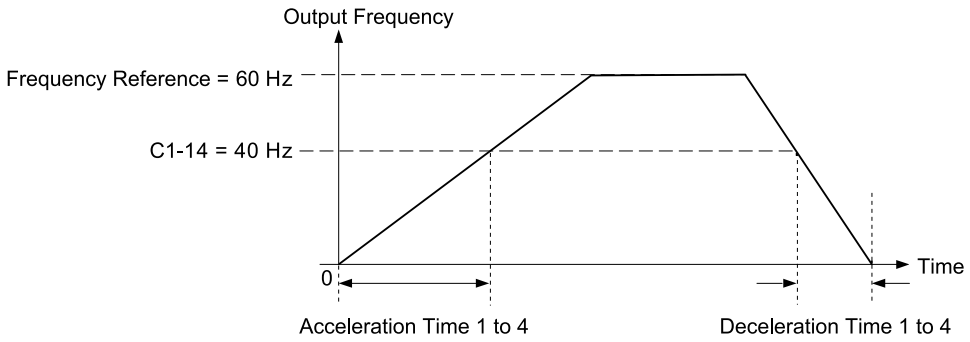

Figure 12.39 Example 2: Acceleration/Deceleration Rate (When C1-14 = 40 Hz, E1-04 = 60 Hz, and the Frequency Reference is 60 Hz)

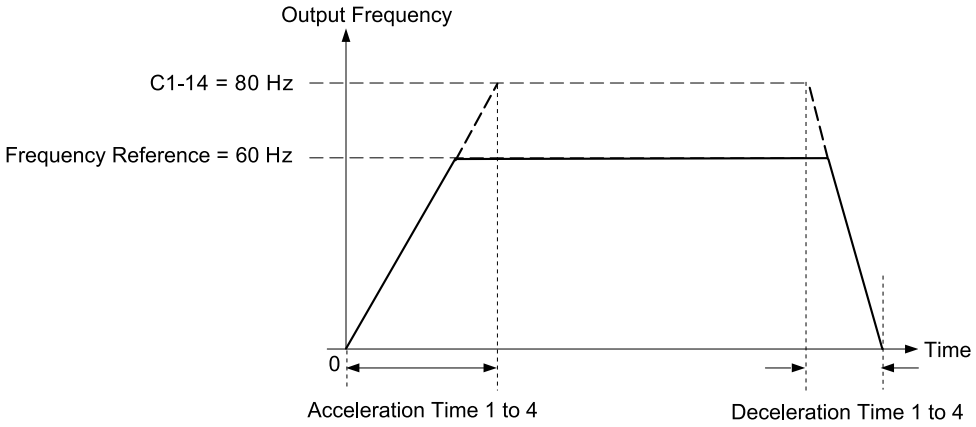

Figure 12.40 Example 3: Acceleration/Deceleration Rate (When C1-14 = 80 Hz, E1-04 = 60 Hz, and the Frequency Reference is 60 Hz)

Note:
- Figure 12.38 to Figure 12.40 show the accel/decel times when *C2-01 to C2-04 [Jerk@Start of Accel to Jerk@End of Decel] = 0.00 s*.
- When *L3-01 ≠ 1 [StallP Mode@Accel≠ Disabled]*, Stall Prevention could cause the acceleration time to be longer than the set value.
- When *L3-04 ≠ 0 [StallP@Decel Enable ≠ Disabled]*, Stall Prevention could cause the deceleration time to be longer than the set value.

◆ C2: JERK CONTROL

Use S-curve characteristics to smooth acceleration and deceleration and to minimize abrupt shock to the load. Set S-curve characteristic time during acceleration/deceleration at start and acceleration/deceleration at stop. The following figure explains how S-curves are applied.

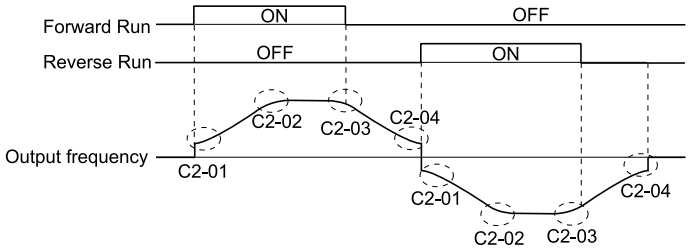

Figure 12.41 S-Curve Timing Diagram - Forward/Reverse Operation

Note:
- If *STPo [Motor Step-Out Detected]* occurs when starting a PM motor, try increasing the value set to *C2-01*.
- Setting the S-curve will increase the acceleration and deceleration times.

$$\text{Acceleration time} = \text{Selected acceleration time} + \frac{\text{C2-01} + \text{C2-02}}{2}$$

$$\text{Deceleration time} = \text{Selected deceleration time} + \frac{\text{C2-03} + \text{C2-04}}{2}$$

■ C2-01: Jerk@Start of Accel

No. (Hex.)	Name	Description	Default (Range)
C2-01 (020B)	Jerk@Start of Accel	V/f OLV OLV/PM AOLV/PM EZOLV Sets the S-curve acceleration time at start.	Determined by A1-02 (0.00 - 10.00 s)

■ C2-02: Jerk@End of Accel

No. (Hex.)	Name	Description	Default (Range)
C2-02 (020C)	Jerk@End of Accel	V/f OLV OLV/PM AOLV/PM EZOLV Sets the S-curve acceleration time at completion.	0.20 s (0.00 - 10.00 s)

■ C2-03: Jerk@Start of Decel

No. (Hex.)	Name	Description	Default (Range)
C2-03 (020D)	Jerk@Start of Decel	V/f OLV OLV/PM AOLV/PM EZOLV Sets the S-curve deceleration time at start.	0.20 s (0.00 - 10.00 s)

■ C2-04: Jerk@End of Decel

No. (Hex.)	Name	Description	Default (Range)
C2-04 (020E)	Jerk@End of Decel	V/f OLV OLV/PM AOLV/PM EZOLV Sets the S-curve deceleration time at completion.	0.00 s (0.00 - 10.00 s)

◆ C3: SLIP COMPENSATION

The Slip Compensation function improves the speed accuracy of an induction motor. As loads on induction motors increase, motor slip increases and motor speed decreases. By adjusting the output frequency in accordance with the motor load, it compensates the slip and makes the motor speed equal to the frequency reference.

■ C3-01: Slip Comp Gain

No. (Hex.)	Name	Description	Default (Range)
C3-01 (020F) RUN	Slip Comp Gain	V/f OLV OLV/PM AOLV/PM EZOLV Sets the gain for the slip compensation function. Usually it is not necessary to change this setting.	Determined by A1-02 (0.0 - 2.5)

Note:

Correctly set these parameters before changing the slip compensation gain:
- *E2-01 [Mot Rated Current (FLA)]*
- *E2-02 [Mot Rated Slip]*
- *E2-03 [Mot No-Load Current]*

Adjust this parameter as follows if necessary:

- If the motor speed is slower than the frequency reference, increase this parameter in 0.1-unit increments.
- If the motor speed is slower than the frequency reference value, decrease this parameter value in 0.1-unit increments.

■ C3-02: Slip Comp Delay Time

No. (Hex.)	Name	Description	Default (Range)
C3-02 (0210) RUN	Slip Comp Delay Time	V/f OLV OLV/PM AOLV/PM EZOLV Sets the slip compensation delay time when speed is unstable or when the slip compensation response is too slow. Usually it is not necessary to change this setting.	Determined by A1-02 (0 - 10000 ms)

Use these settings to adjust this parameter as necessary:

- When the speed is not stable, increase the setting.
- When the slip compensation response is too slow, decrease the setting.

■ C3-03: Slip Comp Limit

No. (Hex.)	Name	Description	Default (Range)
C3-03 (0211)	Slip Comp Limit	V/f OLV OLV/PM AOLV/PM EZOLV Sets the upper limit for the slip compensation function as a percentage of the motor rated slip.	200% (0 - 250%)

If you increase the value of *C3-01 [Slip Comp Gain]* and the motor speed is slow, use this parameter. The drive uses this parameter when the slip is at the upper limit of slip compensation. Make sure that you measure the motor speed when you increase this parameter value. Set this parameter to make the frequency reference and the slip compensation limit less than the permitted range of the machine.

The slip compensation limit is constant in the constant torque range (frequency reference ≤ *E1-06 [Base Frequency]*). In the constant output range where the frequency reference > *E1-06*, the slip compensation limit increases with the *C3-03* value and the output frequency as shown.

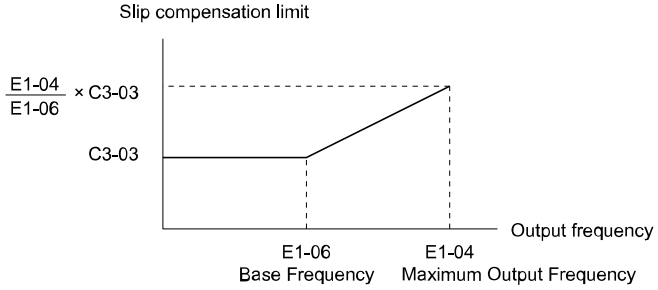

Figure 12.42 Slip Compensation Limit

■ C3-04: Slip Comp@Regen

No. (Hex.)	Name	Description	Default (Range)
C3-04 (0212)	Slip Comp@Regen	V/f OLV OLV/PM AOLV/PM EZOLV Sets the slip compensation function during regenerative operation.	0 (0 - 2)

If you apply a regenerative load when slip compensation function during regeneration is active, the quantity of regeneration can increase immediately. In this condition, it is necessary to use a dynamic braking option (braking resistor or braking resistor unit).

0 : Disabled

The drive does not provide slip compensation during regeneration.

The load and operation status (regenerative operation) can cause the motor speed to be higher or lower than the frequency reference.

1 : Enable>6 Hz

Slip compensation function is enabled during regeneration. Slip compensation is disabled at output frequencies of 6 Hz or less.

2 : Enable>C3-15

The drive uses *E2-02 [Mot Rated Slip]* to automatically calculate the frequency range where it will disable slip compensation function during regenerative operation.

Slip compensation is enabled at frequencies as low as 2 Hz.

■ C3-05: Vout Limit Selection

No. (Hex.)	Name	Description	Default (Range)
C3-05 (0213)	Vout Limit Selection	V/f OLV OLV/PM AOLV/PM EZOLV Sets the automatic reduction of motor magnetic flux when the output voltage is saturated.	0 (0, 1)

The drive will decrease flux and increase current to compensate torque when voltage is saturated. Make sure that the drive has sufficient output current capacity before you enable this parameter. When this parameter = *1 [Enabled]*, the output current will increase by 10% at a maximum (at rated load) before it is enabled.

Enable this parameter to increase speed precision when you move heavy loads at high speeds in these conditions:

- Power supply voltage is low

• Motor rated voltage is high

Do not enable this parameter in these conditions:

• Operating a motor in the middle speed range or low speed range

• Power supply voltage is a minimum of 10% more than the motor rated voltage

When you enable this parameter, if the power supply voltage is much less than the motor rated voltage, torque control will not be accurate.

0 : Disabled

1 : Enabled

■ C3-16: Vout Limit Start Level

No. (Hex.)	Name	Description	Default (Range)
C3-16 (0261) Expert	Vout Limit Start Level	V/f OLV OLV/PM AOLV/PM EZOLV Sets the modulation factor that starts the output voltage limit operation when *C3-05 = 1 [Vout Limit Selection = Enabled]*.	90.0% (70.0 - 90.0%)

■ C3-17: Vout Limit Max Level

No. (Hex.)	Name	Description	Default (Range)
C3-17 (0262) Expert	Vout Limit Max Level	V/f OLV OLV/PM AOLV/PM EZOLV Sets the modulation factor used with *C3-18 [Vout Limit Level]* for the output voltage limit operation when *C3-05 = 1 [Vout Limit Selection = Enabled]*.	100.0% (85.0 - 100.0%)

■ C3-18: Vout Limit Level

No. (Hex.)	Name	Description	Default (Range)
C3-18 (0263) Expert	Vout Limit Level	V/f OLV OLV/PM AOLV/PM EZOLV Sets the maximum drop width of the voltage reference when *C3-05 = 1 [Vout Limit Selection = Enabled]*.	90.0% (50.0 - 100.0%)

■ C3-21: M2 Slip Comp Gain

No. (Hex.)	Name	Description	Default (Range)
C3-21 (033E) RUN	M2 Slip Comp Gain	V/f OLV OLV/PM AOLV/PM EZOLV Sets the gain for the motor 2 slip compensation function. Usually it is not necessary to change this setting.	Determined by E3-01 (0.0 - 2.5)

Note:

Correctly set these parameters before changing the slip compensation gain:

• *E4-01 [M2 Rated Current (FLA)]*

• *E4-02 [M2 Rated Slip]*

• *E4-03 [M2 No-Load Current]*

Use these settings to adjust this parameter as necessary:

• If the motor speed is slower than the frequency reference, increase C3-01 in 0.1 unit increments.

• If the motor speed is higher than the frequency reference, decrease the setting of this parameter in 0.1-unit increments.

■ C3-22: M2 Slip Comp DelayTime

No. (Hex.)	Name	Description	Default (Range)
C3-22 (0241) RUN	M2 Slip Comp DelayTime	V/f OLV OLV/PM AOLV/PM EZOLV Sets the slip compensation delay time for motor 2 when speed is unstable or when the slip compensation response is too slow. Usually it is not necessary to change this setting.	Determined by E3-01 (0 - 10000 ms)

Use these settings to adjust this parameter as necessary:

• When the speed is not stable, increase the setting.

• When the slip compensation response is too slow, decrease the setting.

■ C3-23: M2 Slip Comp Limit

No. (Hex.)	Name	Description	Default (Range)
C3-23 (0242)	M2 Slip Comp Limit	V/f OLV OLV/PM AOLV/PM EZOLV Sets the upper limit for the slip compensation function as a percentage of the motor 2 rated slip.	200% (0 - 250%)

If you increase the value of *C3-21 [M2 Slip Comp Gain]* and the motor speed is slow, use this parameter. The drive uses this parameter when the slip is at the upper limit of slip compensation. Make sure that you measure the motor speed when you increase this parameter value. Set this parameter to make the frequency reference and the slip compensation limit less than the permitted range of the machine.

The slip compensation limit is constant in the constant torque range (frequency reference ≤ *E3-06 [M2 Base Frequency]*). In the constant power range where the frequency reference > *E3-06*, the slip compensation limit increases with the *C3-23* value and the output frequency as shown.

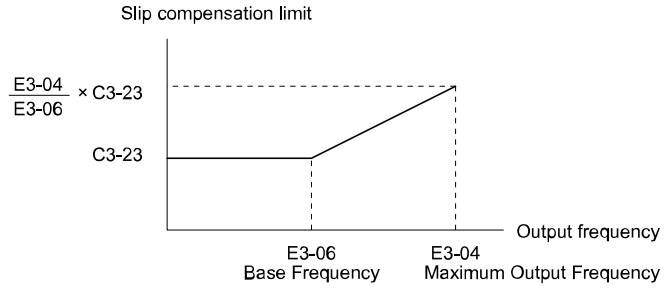

Figure 12.43 Motor 2 Slip Compensation Limit

■ C3-24: M2 Slip Comp Regen Condition

No. (Hex.)	Name	Description	Default (Range)
C3-24 (0243)	M2 Slip Comp Regen Condition	V/f OLV OLV/PM AOLV/PM EZOLV Sets the slip compensation during regenerative operation function for motor 2.	0 (0 - 2)

If you enable the slip compensation function during regeneration, the quantity of regeneration can increase immediately. In this condition, it is necessary to use a dynamic braking option (braking resistor or braking resistor unit).

0 : Disabled

The drive will not do Slip compensation during regeneration.

The load and operation status (regenerative operation) can cause the motor speed to be higher or lower than the frequency reference.

1 : Enable>6 Hz

The slip compensation function is enabled during regeneration. Slip compensation is disabled at output frequencies of 6 Hz or less.

2 : Enable>C3-15

The drive uses *E2-02 [Mot Rated Slip]* to automatically calculate the frequency range where it will disable slip compensation function during regeneration.

Slip compensation is enabled at frequencies as low as 2 Hz.

■ C3-29: Slip Gain@Low Speed

No. (Hex.)	Name	Description	Default (Range)
C3-29 (1B5D) Expert	Slip Gain@Low Speed	V/f OLV OLV/PM AOLV/PM EZOLV Sets the gain for the slip compensation function in the low speed range. Usually it is not necessary to change this setting.	0.0 (0.0 - 2.5)

Adjust this parameter as follows if necessary:

- If the motor speed is slower than the frequency reference, increase the setting value in 0.1 unit increments.
- If the motor speed is faster than the frequency reference, decrease the setting value in 0.1 unit increments.

◆ C4: TORQUE COMPENSATION

Torque compensation is a function that increases voltage to increase output torque as compensation for insufficient torque production at start-up or low-speed operation.

Voltage drops due to motor winding resistance cause torque generating voltage to decrease, which causes insufficient torque. If the main circuit cable connecting the drive and motor is long, this can also cause insufficient torque due to voltage drops.

Note:

Set the motor parameters and V/f pattern properly before setting *C4 parameters*.

■ C4-01: Trq Comp Gain

No. (Hex.)	Name	Description	Default (Range)
C4-01 (0215) RUN	Trq Comp Gain	V/f OLV OLV/PM AOLV/PM EZOLV Sets the gain for the torque compensation function. Use this parameter value for motor 1 when operating multiple motors.	Determined by A1-02 (0.00 - 2.50)

For these control methods and states, adjust the setting value.

A1-02 [Control Method]	Status	Adjustment
0 [V/f Control] 8 [EZ Vector]	Torque is not sufficient during low-speed operation of 10 Hz or less.	Increase the setting in 0.05-unit increments.
	There is vibration in the motor or the motor hunts when operating the drive with a light load.	Decrease the setting in 0.05-unit decrements.
	The cable length between the drive and motor is too long.	Increase the setting in 0.05-unit increments.

Note:

- Adjust *C4-01* to make sure that output current is not more than the drive rated current while the drive operates at low speed.
- When *A1-02 = 2 [OLVector]*, do not change this parameter under normal conditions. Torque accuracy will decrease.
- When *A1-02 = 5 [PM OLVector]*, do not change this parameter under normal conditions. Setting this value too high can cause overcompensation and motor oscillation.
- When *A1-02 = 8 [EZ Vector]*, you cannot change this parameter during drive run.

■ C4-02: Trq Comp Delay Time

No. (Hex.)	Name	Description	Default (Range)
C4-02 (0216) RUN	Trq Comp Delay Time	V/f OLV OLV/PM AOLV/PM EZOLV Sets the torque compensation delay time. Usually it is not necessary to change this setting.	Determined by A1-02 (0 - 60000 ms)

Note:

If *A1-02 = 8 [Control Method = EZ Vector]*, you cannot change the setting while the drive is running.

Set this parameter in these conditions:

- If there is vibration in the motor, increase the setting.
- If the motor speed or motor torque response is too slow, decrease the setting.

■ C4-03: Trq Comp@FWD Start

No. (Hex.)	Name	Description	Default (Range)
C4-03 (0217)	Trq Comp@FWD Start	V/f OLV OLV/PM AOLV/PM EZOLV Set the amount of torque reference for forward start as a percentage of the motor rated torque.	0.0% (0.0 - 200.0%)

The torque compensation function is performed using the time constant set in *C4-05 [Trq Comp Time]*.

This is available only when you start the motor with the forward command. Set this parameter to 0.0 to disable this function.

■ C4-04: Trq Comp@REV Start

No. (Hex.)	Name	Description	Default (Range)
C4-04 (0218)	Trq Comp@REV Start	V/f OLV OLV/PM AOLV/PM EZOLV Sets the amount of torque reference for reverse start as a percentage of the motor rated torque.	0.0% (-200.0 - 0.0%)

The drive uses the time constant set in *C4-05 [Trq Comp Time]* to do the torque compensation function.
This is available only when you start the motor with the reverse Run command.

■ C4-05: Trq Comp Time

No. (Hex.)	Name	Description	Default (Range)
C4-05 (0219)	Trq Comp Time	V/f OLV OLV/PM AOLV/PM EZOLV Sets the starting torque constant to use with *C4-03 and C4-04 [Trq Comp@FWD Start and Trq Comp@REV Start]*.	10 ms (0 - 200 ms)

■ C4-06: M2 Trq Comp Delay Time

No. (Hex.)	Name	Description	Default (Range)
C4-06 (021A)	M2 Trq Comp Delay Time	V/f OLV OLV/PM AOLV/PM EZOLV Sets the value if *ov [Overvoltage]* occurs with sudden changes in the load, at the end of acceleration, or at the start of deceleration.	150 ms (0 - 10000 ms)

Sets the time constant used during Speed Search or during regenerative operation when *ov* occurs.
Adjust this parameter in the following circumstances.

- Gradually reduce the setting in 10 ms increments and check the performance to improve motor torque speed response when *ov* occurs.

Note:
- Ensure that *C4-06* ≥ *C4-02 [Trq Comp Delay Time]*.
- Increase the setting value of *n2-03 [AFR Time 2]* proportional to *C4-06*.

■ C4-07: M2 Trq Comp Gain

No. (Hex.)	Name	Description	Default (Range)
C4-07 (0341) RUN	M2 Trq Comp Gain	V/f OLV OLV/PM AOLV/PM EZOLV Sets the gain for motor 2 torque compensation function when using the Motor Switch function.	1.00 (0.00 - 2.50)

In V/f Control, adjust the value in 0.05-unit increments for these conditions:

- When torque is not sufficient during low-speed operation of 10 Hz or less, increase the setting value
- When there is vibration in the motor or when the motor hunts when operating the drive with a light load, decrease the setting value
- When you use a long motor cable, increase the setting value.

Note:
- Adjust *C4-07* to make sure that the output current is not more than the drive rated current during low-speed operation.
- When *A1-02 = 2 [Control Method = OLVector]*, usually it is not necessary to change the setting. Torque accuracy will decrease.

■ C4-23: Current Ctrl Gain

No. (Hex.)	Name	Description	Default (Range)
C4-23 (1583) RUN Expert	Current Ctrl Gain	V/f OLV OLV/PM AOLV/PM EZOLV Current control gain. Usually it is not necessary to change this parameter.	1.00 (0.50 - 2.50)

◆ C5: ASR - SPEED REGULATION

The ASR adjusts the torque reference to decrease the difference between frequency reference and motor speed.

A1-02 [Control Method]	Targets of Adjustment
• 6: PM AOLVector • 8: EZ Vector	Torque Reference

Figure 12.44 is a speed control block diagram of each control method.

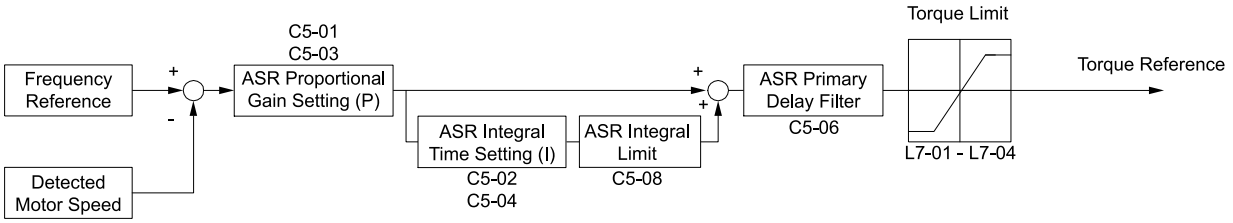

Figure 12.44 Speed Control Block Diagram for AOLV/PM and EZOLV

Note:

The detected speed is the speed estimation value when configured such that *A1-02 = 6 or 8 [PM AOLVector = PM AOLVector or EZ Vector]*.

■ Before You Adjust ASR Parameters

- Do Auto-Tuning and set up all motor data correctly.
- Always make adjustments with the load connected to the motor.
- Use analog output signals to monitor *U1-16 [SFS Output Frequency]* and *U1-05 [Motor Speed]* when you adjust the ASR.

■ ASR Adjustment Procedure for AOLV/PM and EZOLV

Do this procedure to adjust ASR parameters:

1. Run the motor at zero speed or low speed and increase *C5-01 [ASR PGain 1]* until immediately before vibration starts to occur.
2. Run the motor at zero speed or low speed and decrease *C5-02 [ASR ITime 1]* until immediately before vibration starts to occur.
3. Check for oscillation when you run the motor at maximum speed.
4. If oscillation occurs, increase *C5-02* and decrease *C5-01*.
   When there is no oscillation, the adjustment procedure is complete.
5. Set the low-speed gain. Run the motor at zero speed or low speed and increase *C5-03 [ASR PGain 2]* until immediately before vibration starts to occur.

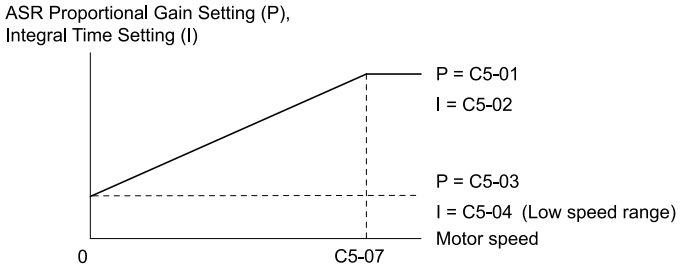

Figure 12.45 Low-speed/High-speed Gain Settings

6. Set the low-speed integral time. Run the motor at zero speed or low speed and decrease *C5-04 [ASR ITime 2]* until immediately before vibration starts to occur.
7. Set *C5-07 [ASR Gain Switch Frequency]*.
8. Check for oscillation when you run the motor at speeds more than the setting in *C5-07*.

Note:

- If overshooting occurs when acceleration ends, decrease the value set in *C5-01* and increase the value set in *C5-02*.
- If undershoot occurs at stop, decrease *C5-03* and increase *C5-04*.

■ Use MFDI Switch for Proportional Gain

You can use the input terminals set for ASR Gain (C5-03) Select *[H1-xx = 45]* to switch the proportional gains set with *C5-01* and *C5-03*. When the configured input terminal is deactivated, the proportional gain set for *C5-01* is selected. When the terminal is activated, the proportional gain set for *C5-03* is selected. The proportional gain changes linearly over the time set in *C5-02 [ASR ITime 1]*. The signals from this MFDI are more important than *C5-07 [ASR Gain Switch Frequency]*.

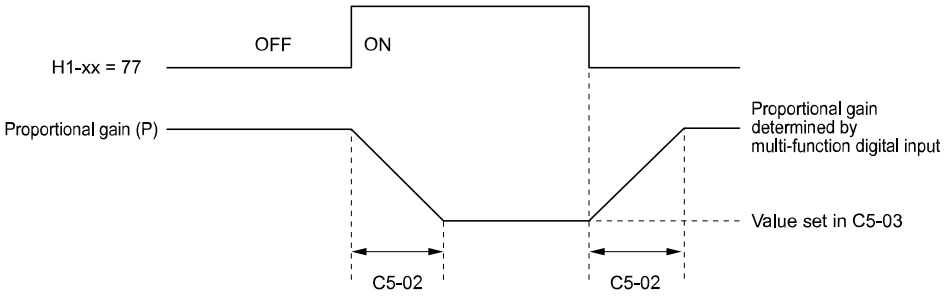

Figure 12.46 Proportional Gain through Multi-function Digital Input Switch

■ Speed Waveform Monitoring Method

To make small adjustments of ASR parameters, monitor the speed waveforms when you make the adjustments. Table 12.21 shows example settings of parameters to monitor speed waveforms.

Table 12.21 Example Settings of MFAO Terminals to Monitor Speed Waveforms

No.	Name	Setting Value	Description
H4-01	AO An.Out Select	116	Lets you use terminal AM to monitor *U1-16 [SFS Output Frequency]*.
H4-02	AO An.Out Gain	100.0%	
H4-03	AO An.Out Bias	0.0%	
H4-07	AO Signal Level Select	0	Lets you monitor in a 0 V to 10 V range.

Based on this setting, MFAO terminal AM outputs the output frequency after SFS in a 0 V to 10 V (0% to 100%) range. The MFAO common is terminal A0V:

The manufacturer recommends that you monitor the output frequency after SFS and the motor speed for delays in response and differences in reference values.

■ Adjust ASR Parameters

Use Table 12.22 to adjust ASR. The table lists parameters for motor 1. You can make the same changes to motor 2 parameters when you run a second motor.

Note:

When adjusting the proportional gain and integral time, adjust the proportional gain first.

Table 12.22 ASR Response and Possible Solutions

Problem		Possible Solutions
Speed response is slow.	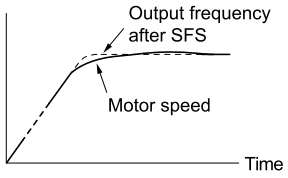	• Increase *C5-01/C5-03 [ASR PGain 1/ASR PGain 2]*. • Decrease *C5-02/C5-04 [ASR ITime 1/ASR ITime 2]*.
Overshoot or undershoot occurs at the end of acceleration or deceleration.	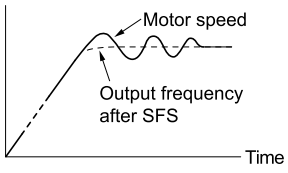	• Decrease *C5-01/C5-03*. • Increase *C5-02/C5-04*.
Vibration and oscillation occur at constant speed.	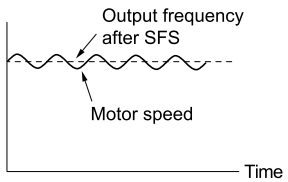	• Decrease *C5-01/C5-03*. • Increase *C5-02/C5-04*. • Increase *C5-06 [ASR Delay Time]*.
Oscillation at low speed and response is too slow at high speed. Oscillation at high speed and response is too slow at low speed.	-	When *A1-02 = 6 [Control Method = PM AOLVector]*, use *C5-01 to C5-04* to set the best ASR settings for high and low speed. Use *C5-07 [ASR Gain Switch Frequency]* to switch the ASR proportional gain and ASR integral time as specified by the output frequency.

■ C5-01: ASR PGain 1

No. (Hex.)	Name	Description	Default (Range)
C5-01 (021B) RUN	ASR PGain 1	V/f OLV OLV/PM AOLV/PM EZOLV Sets the gain to adjust ASR response.	Determined by A1-02 (0.00 - 300.00)

A higher gain provides a higher speed response. Usually, the gain increases with larger loads. Too much gain will cause vibration.

Note:
- When *A1-02 = 0 [Control Method = V/f Control]*, set *H6-01 = 3 [PI Pulse Train Function = PG Feedback]* to enable this parameter.
- The drive usually sets Motor 1 ASR with *C5-01* and *C5-02 [ASR ITime 1]*. When you set *H1-xx = 45 [MFDI Function Select = ASR Gain Switch]*, you can switch between *C5-01* and *C5-03 [ASR PGain 2]*. You can also use *C5-01* as an alternative to *C5-03* and *C5-02* as an alternative to *C5-04* when the speed is less than or equal to the frequency set in *C5-07 [ASR Gain Switch Frequency]*.
- The drive automatically adjusts *C5-01* in ASR Tuning.

■ C5-02: ASR ITime 1

No. (Hex.)	Name	Description	Default (Range)
C5-02 (021C) RUN	ASR ITime 1	V/f OLV OLV/PM AOLV/PM EZOLV Sets the ASR integral time.	Determined by A1-02 (0.000 - 60.000 s)

When you increase the integral time, the responsiveness will decrease. An integral time that is too short can cause oscillation.

Note:
When *A1-02 = 0 [Control Method = V/f Control]*, set *H6-01 = 3 [PI Pulse Train Function = PG Feedback]* to enable this parameter.

■ C5-03: ASR PGain 2

No. (Hex.)	Name	Description	Default (Range)
C5-03 (021D) RUN	ASR PGain 2	V/f OLV OLV/PM AOLV/PM EZOLV Sets the gain to adjust ASR response.	Determined by A1-02 (0.00 - 300.00)

A higher gain provides a higher speed response. Usually, the gain increases with larger loads. Too much gain will cause vibration.

Note:
When *A1-02 = 0 [Control Method = V/f Control]*, set *H6-01 = 3 [PI Pulse Train Function = PG Feedback]* to enable this parameter.

■ C5-04: ASR ITime 2

No. (Hex.)	Name	Description	Default (Range)
C5-04 (021E) RUN	ASR ITime 2	V/f OLV OLV/PM AOLV/PM EZOLV Sets the ASR integral time.	Determined by A1-02 (0.000 - 60.000 s)

When you increase the integral time, the responsiveness will decrease. An integral time that is too short can cause oscillation.

Note:
When *A1-02 = 0 [Control Method = V/f Control]*, set *H6-01 = 3 [PI Pulse Train Function = PG Feedback]* to enable this parameter.

■ C5-05: ASR Limit

No. (Hex.)	Name	Description	Default (Range)
C5-05 (021F)	ASR Limit	V/f OLV OLV/PM AOLV/PM EZOLV Sets the ASR output limit where *E1-04 [Max Output Frequency]* is 100%.	5.0% (0.0 - 20.0%)

If the motor rated slip is high, it is necessary to increase the setting for correct motor speed control. Use *U6-04 [ASR Output]* to make sure that ASR is operating at the limit set in this parameter. When ASR is operating at the limit, correctly set the encoder (PG) signal before you make changes to *C5-05*.

Note:
When *A1-02 = 0 [Control Method = V/f Control]*, set *H6-01 = 3 [PI Pulse Train Function = PG Feedback]* to enable this parameter.

■ C5-06: ASR Delay Time

No. (Hex.)	Name	Description	Default (Range)
C5-06 (0220)	ASR Delay Time	V/f OLV OLV/PM AOLV/PM EZOLV Sets the filter time constant of the torque reference output from the speed loop. Usually it is not necessary to change this setting.	Determined by A1-02 (0.000 - 0.500 s)

If you have a load with low rigidity or if oscillation is a problem, decrease *C5-01* in 2-unit decrements or decrease *C5-06* in 0.001-unit decrements.

■ C5-07: ASR Gain Switch Frequency

No. (Hex.)	Name	Description	Default (Range)
C5-07 (0221)	ASR Gain Switch Frequency	V/f OLV OLV/PM AOLV/PM EZOLV Sets the frequency where the drive will switch between these parameters: *C5-01 and C5-03 [ASR PGain 1 and ASR PGain 2]* *C5-02 and C5-04 [ASR ITime 1 and ASR ITime 2]*	Determined by A1-02 (Determined by A1-02)

Switching the proportional gain and integral time in the low or high speed range can help operation become stable. A good switching point is 80% of the frequency where oscillation occurs or at 80% of the maximum output frequency.

Note:
An MFDI set for *H1-xx = 45 [MFDI Function Select = ASR Gain Switch]* will have priority over the ASR gain switching frequency.

■ C5-08: ASR Integral Limit

No. (Hex.)	Name	Description	Default (Range)
C5-08 (0222)	ASR Integral Limit	V/f OLV OLV/PM AOLV/PM EZOLV Set the upper limit of the ASR integral amount as a percentage of the rated load.	400% (0 - 400%)

■ C5-12: Integral@Ac/Dec Operation

No. (Hex.)	Name	Description	Default (Range)
C5-12 (0386)	Integral@Ac/Dec Operation	V/f OLV OLV/PM AOLV/PM EZOLV Sets ASR integral operation during acceleration and deceleration.	0 (0, 1)

Set this parameter to *1* to keep the motor speed near the frequency reference during operation and acceleration/deceleration.

Note:
- When *A1-02 = 0 [Control Method = V/f Control]*, set *H6-01 = 3 [PI Pulse Train Function = PG Feedback]* to enable this parameter.
- If you enable integral control, overshoot or undershoot can occur when acceleration or deceleration complete. If there are problems with overshooting and undershooting, set this parameter to *0*.

0 : Disabled

The drive will not enable integral operation during acceleration or deceleration. The drive always enables integral operation during constant speed.

1 : Enabled

Integral operation is always enabled.

■ C5-29: Speed Ctrl Response Mode

No. (Hex.)	Name	Description	Default (Range)
C5-29 (0B18) Expert	Speed Ctrl Response Mode	V/f OLV OLV/PM AOLV/PM EZOLV Sets the level of speed control responsiveness. Usually it is not necessary to change this setting.	1 (0, 1)

If a high level of speed control responsiveness is necessary, set *C5-29 = 1*, then adjust the speed control (ASR) parameter.

0 : Standard

1 : High Perf 1

■ C5-39: ASR Delay Time 2

No. (Hex.)	Name	Description	Default (Range)
C5-39 (030D)	ASR Delay Time 2	V/f OLV OLV/PM AOLV/PM EZOLV Sets the filter time constant used when the torque reference is output from ASR. Usually it is not necessary to change this parameter.	0.000 s (0.000 - 0.500 s)

If you have a load with low rigidity or if oscillation is a problem, increase this setting in 0.01 unit increments.

◆ C6: DUTY AND CARRIER

C6 parameters are used to set the selection of drive duty rating, selection of carrier frequency, and upper and lower limits of carrier frequencies.

■ C6-01: ND/HD Duty Selection

No. (Hex.)	Name	Description	Default (Range)
C6-01 (0223)	ND/HD Duty Selection	V/f OLV OLV/PM AOLV/PM EZOLV Sets the drive duty rating.	0 (0, 1)

0 : HD Rating

The overload tolerance is 150% of the rated output current for 60 seconds.

1 : ND Rating

The overload tolerance is 110% of the rated output current for 60 seconds.

There are two types of load ratings for this product depending on the load characteristics of the application: Heavy Duty Rating (HD) and Normal Duty Rating (ND).

The drive rated output current, overload tolerance, and acceleration stall prevention level change when the duty rating changes. Set the drive to agree with the duty rating of the selected drive capacity. In HD, the tolerance is 150% overload for 60 seconds. In ND, the tolerance is 110% overload for 60 seconds. The rated output current for ND drives is higher than the rated output current for HD drives. Refer to *Model Specifications (Three-Phase 200 V Class) on page 292*, *Model Specifications (Single-Phase 200 V Class) on page 295*, and *Model Specifications (Three-Phase 400 V Class) on page 296* for more information about the rated output current.

Table 12.23 Differences between Heavy Duty Rating and Normal Duty Rating

Item	Heavy Duty Rating (HD)	Normal Duty Rating (ND)
C6-01 Setting	0	1
Load Characteristics	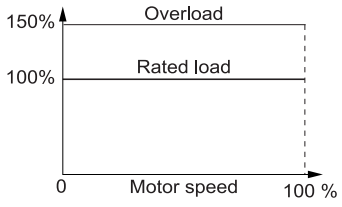	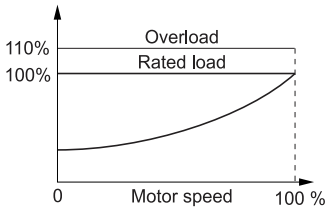
Application	A high overload tolerance is necessary during start up, acceleration, deceleration, and equivalent conditions. • Extruder • Conveyor • Cranes and hoists • Constant torque or high overload capacity are necessary.	Overload tolerance is not necessary. • Fan • Pump • Blower
Overload Tolerance	150% - 60 seconds	110% - 60 seconds
Stall Prevent Level during Accel	150%	120%
Stall Prevent Level during Run	150%	120%
Carrier Frequency	2 kHz	2 kHz Swing-PWM

Note:
- Set the stall prevention level during acceleration with *L3-02* and the stall prevention level during run with *L3-06*.
- Changing *C6-01* also changes the maximum capacity of applicable drive motors. The drive automatically changes the setting values *E2-xx* and *E4-xx* to applicable values. The drive also automatically changes these parameters that depend on motor output:
  – b8-04 [eSave Coef. Value]
  – L2-03 [Min Baseblck Time]
  – L3-24 [Acc@Rated Torque]
  – n5-02 [Mot Inertia Acceleration Time]

■ C6-02: Carrier Frequency Selection

No. (Hex.)	Name	Description	Default (Range)
C6-02 (0224)	Carrier Frequency Selection	V/f OLV OLV/PM AOLV/PM EZOLV Sets the carrier frequency for the transistors in the drive.	Determined by A1-02, C6-01, and o2-04 (Determined by A1-02)

Changes to the switching frequency will decrease audible noise and decrease leakage current.

Note:
Increasing the carrier frequency to more than the default setting will automatically decrease the drive current rating.

1 : 2.0 kHz
2 : 5.0 kHz (4.0 kHz for AOLV/PM)
3 : 8.0 kHz (6.0 kHz for AOLV/PM)
4 : 10.0 kHz (8.0 kHz for AOLV/PM)
5 : 12.5 kHz (10.0 kHz for AOLV/PM)
6 : 15.0 kHz (12.0 kHz AOLV/PM)
7 : Swing PWM 1 (Audible Sound 1)
8 : Swing PWM 2 (Audible Sound 2)
9 : Swing PWM 3 (Audible Sound 3)
A : Swing PWM 4 (Audible Sound 4)
B : Leakage Current Rejection PWM
Set this when the wiring distance between the drive and motor is long and there is a fault in the current monitor or the drive detects and alarm because of the effect of a leakage current.
The carrier frequency is equivalent to 2.0 kHz.
F : User (C6-03 to C6-05)
Use *C6-03 to C6-05* to set detailed setting values.

Note:
- The carrier frequency for Swing PWM 1 is equivalent to 2.0 kHz. Swing PWM applies a special PWM pattern to decrease the audible noise.
- The setting range changes when the *A1-02 [Control Method]* value changes:
  – *5, 8 [PM OLVector, EZ Vector]*: You cannot set to *7 to A*.
  – *6 [EZ Vector]*: You cannot set to *7 to A or F*.

Table 12.24 Guidelines for Carrier Frequency Parameter Setup

Symptom	Remedy
Speed and torque are not stable at low speed.	Decrease the carrier frequency.
Speed and torque are not stable at low speed.	Decrease the carrier frequency.
Too much leakage current from the drive.	Decrease the carrier frequency.
Wiring between the drive and motor is too long.	Decrease the carrier frequency. **Note:** If the motor cable is too long, it can be necessary to decrease the carrier frequency. Refer to Table 12.25 for the wiring distance and decrease the carrier frequency.
Audible motor noise is too loud.	Increase the carrier frequency. Use Swing PWM. **Note:** The default carrier frequency in ND is *C6-02 = 7 [Swing PWM 1 (Audible Sound 1)]*, with a 2 kHz base. You can increase the carrier frequency in Normal Duty mode, but this will also decrease the drive rated current.

Table 12.25 Wiring Distance

Wiring Distance	50 mm (164 ft) Maximum	100 m (328 ft) Maximum	More than 100 m (328 ft)
C6-02 [Carrier Frequency Selection]	1 to F (up to 15 kHz)	1 to 2 (up to 5 kHz), 7	1 (up to 2 kHz), 7

Note:
- When the wiring length is longer than 100 m (328 ft), set A1-02 = 0 [V/f Control].
- The maximum wiring cable length between the drive and a PM motor is 100 m (328 ft).
- If the cable length between the drive and the motor is too long when *A1-02 = 6*, set *A1-02 = 5*.

■ C6-03: Carrier Upper Frequency Limit

No. (Hex.)	Name	Description	Default (Range)
C6-03 (0225)	Carrier Upper Frequency Limit	V/f OLV OLV/PM AOLV/PM EZOLV Sets the upper limit of the carrier frequency. Set *C6-02 = F [Carrier Frequency Selection = User (C6-03 to C6-05)]* to set this parameter.	Determined by C6-02 (1.0 - 15.0 kHz)

Setting a Fixed User-Defined Carrier Frequency

When you cannot use *C6-02* to set a carrier frequency between set selectable values, you can set the value in *C6-03*. The carrier frequency will be fixed to the value set to *C6-03*.

When *A1-02 = 0 [Control Method = V/f Control]*, set *C6-03 = C6-04 [Carrier Lower Frequency Limit]* to fix the carrier frequency.

Setting a Variable Carrier Frequency to Agree with the Output Frequency

When *A1-02 = 0*, set *C6-03*, *C6-04*, and *C6-05 [Carrier Freq Proportional Gain]* as shown in Figure 12.47 to make the carrier frequency change linearly with the output frequency.

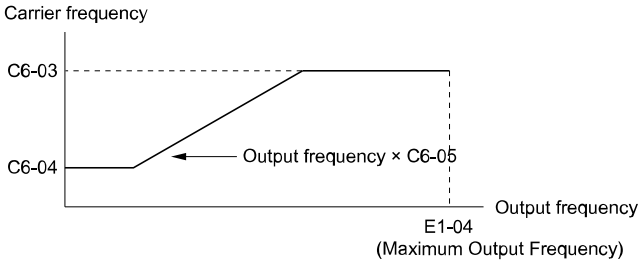

Figure 12.47 Setting a Variable Carrier Frequency to Agree with the Output Frequency

Note:
- When *C6-05 ≤ 7*, the drive disables *C6-04*. The carrier frequency is fixed to the value set to *C6-03*.
- The drive detects *oPE11 [Carrier Frequency Setting Error]* when these conditions are correct at the same time:
  – *C6-05 ≥ 6*
  – *C6-04 ≥ C6-03*

■ C6-04: Carrier Lower Frequency Limit

No. (Hex.)	Name	Description	Default (Range)
C6-04 (0226)	Carrier Lower Frequency Limit	V/f OLV OLV/PM AOLV/PM EZOLV Sets the lower limit of the carrier frequency. Set *C6-02 = F [Carrier Frequency Selection = User (C6-03 to C6-05)]* to set this parameter.	Determined by C6-02 (1.0 - 15.0 kHz)

Set *C6-03 [Carrier Upper Frequency Limit]*, *C6-04*, and *C6-05 [Carrier Freq Proportional Gain]* to make the carrier frequency change linearly with the output frequency.

Note:

The drive detects *oPE11 [Carrier Frequency Setting Error]* when these conditions are correct at the same time:
- *C6-04 ≥ C6-03*
- *C6-05 ≥ 6*

■ C6-05: Carrier Freq Proportional Gain

No. (Hex.)	Name	Description	Default (Range)
C6-05 (0227)	Carrier Freq Proportional Gain	V/f OLV OLV/PM AOLV/PM EZOLV Sets the proportional gain for the carrier frequency. Set *C6-02 = F [Carrier Frequency Selection = User (C6-03 to C6-05)]* to set this parameter.	Determined by C6-02 (0 - 99)

Set *C6-03 [Carrier Upper Frequency Limit]*, *C6-04 [Carrier Lower Frequency Limit]*, and *C6-05* to make the carrier frequency change linearly with the output frequency.

■ C6-09: Carrier@Autotune Rotational

No. (Hex.)	Name	Description	Default (Range)
C6-09 (022B)	Carrier@Autotune Rotational	V/f OLV OLV/PM AOLV/PM EZOLV Sets the Auto-Tuning carrier frequency. Usually it is not necessary to change this setting.	0 (0, 1)

If *C6-09 = 0* and you do Auto-Tuning on a high frequency motor or low impedance motor, it can cause *oC [Overcurrent]*. To prevent *oC*, increase the carrier frequency value, set *C6-09 = 1*, then do Auto-Tuning.

The procedure to set the carrier frequency when the *A1-02 [Control Method]* setting changes.

- When *A1-02 = 2 [OLVector]*, set *C6-02 = F [Carrier Frequency Selection = User (C6-03 to C6-05)]* and then increase the value set to *C6-03 [Carrier Upper Frequency Limit]*.
- When *A1-02 = 5 or 6 [PM OLVector or PM AOLVector]*, use *C6-02* to increase the carrier frequency.

0 : 5 kHz

Note:

When *A1-02 = 5 or 6*, the carrier frequency is 2 kHz.

1 : use C6-03

Note:

When *A1-02 = 5 or 6*, the carrier frequency is the value set to *C6-02*.

12.4 d: REFERENCE

d parameters set the frequency reference input method and dead band range. They also set torque control, field weakening, and field forcing functions.

WARNING! *Sudden Movement Hazard. Use fast stop circuits to safely and quickly stop the drive. After you wire the fast stop circuits, you must check their operation. Test the operation of the fast stop function before you use the drive. If you do not test the fast stop circuit before you operate the drive, it can cause serious injury or death.*

WARNING! *Sudden Movement Hazard. When you use the drive in a lifting application, you must also install external safety circuitry. The drive does not have protection against accidental load drops in lifting applications. Install electrical and/or mechanical safety circuit mechanisms that are isolated from the drive circuitry. If you do not use external safety circuitry, the drive could drop the load and cause serious injury or death.*

◆ d1: FREQUENCY REFERENCE

Figure 12.48 shows the frequency reference input method, command source selection method, and priority descriptions.

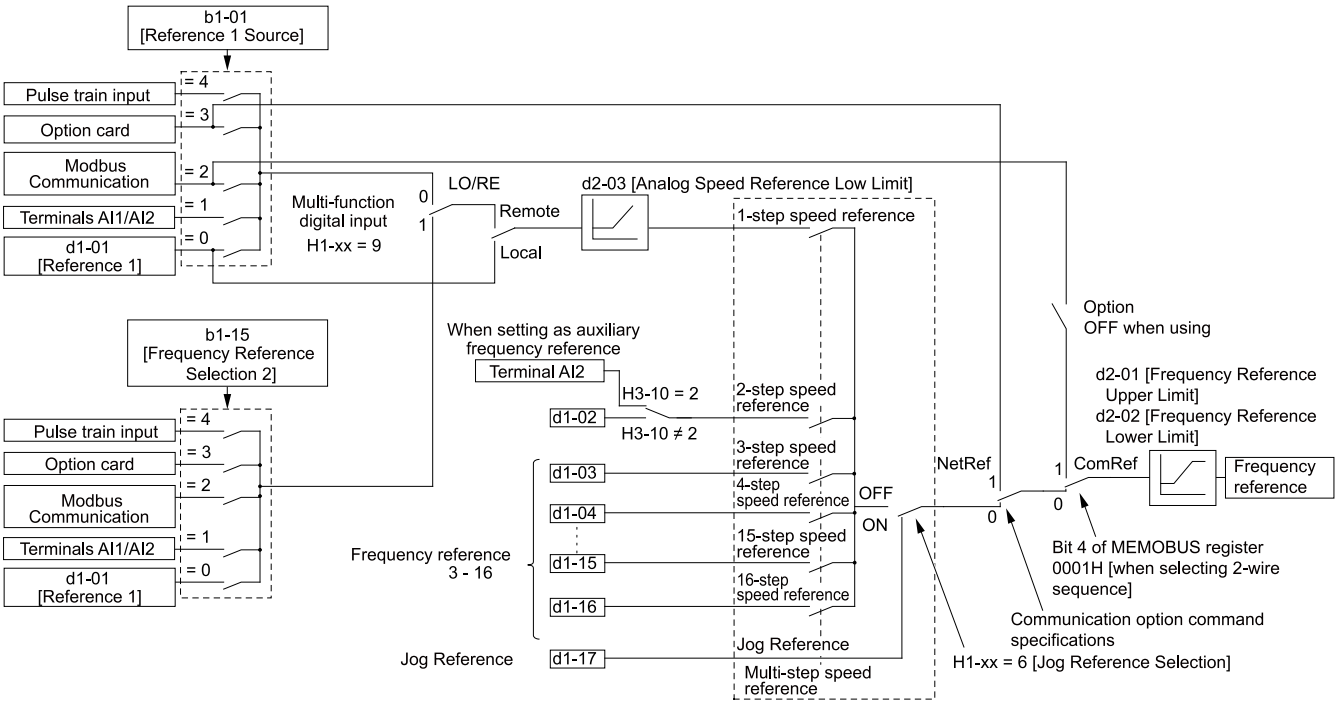

Figure 12.48 Frequency Reference Setting Hierarchy

■ Multi-Step Speed Operation

The drive has a multi-step speed operation function that can set many frequency references in advance. Set frequency references in *d1-xx parameters*. You can select the set frequency references with MFDI signals from an external source. Activate and deactivate the digital input to select the frequency reference to change the motor speed in steps. You can use the 16-step frequency reference and one Jog Frequency Reference (JOG command) to switch the speed to the maximum 17-step speeds.

Note:
- The Jog Frequency Reference (JOG command) overrides all other frequency references.
- You can use the MFDI to switch the frequency reference when the motor is running. The drive will apply the enabled acceleration and deceleration times.
- The default settings for Multi-Step Speed Reference 1 (master frequency reference) and Multi-Step Speed Reference 2 (auxiliary frequency reference) are the analog frequency reference.
  Also, voltage command input terminal AI1 and current input terminal AI2 for Multi-Step Speed Reference 1 (master frequency reference) are added internally by default. The drive uses Multi-Step Speed Reference 1 when the signal is connected to an analog input terminal.

■ Setting Procedures for Multi-step Speed Operation

Use an Analog Input as Reference 1 and 2

This section gives information about the procedures to set these examples:

- Multi-Step Speed 6 (6 types of frequency references)

• When you set the voltage input of analog inputs from terminals AI1 and AI2 to 0 V to 10 V (Lower Limit at 0)

Procedure	Configuration Parameter	Task Contents
1	Reference 1	1. Sets *b1-01 = 1 [Freq. Ref. Sel. 1 = Analog Input]*. 2. Sets *H3-02 = 3 [AI1 Function Selection = FrqBIAS Frq]*. 3. Sets *H3-01 = 0 [AI1 Signal Level Select = 0 to 10V (Lower Limit at 0)]*.
2	Reference 2	1. Sets *H3-10 = 1 [AI2 Function Selection = AuxFreqRef1]*. 2. Sets *H3-09 = 0 [AI2 Signal Level Select = 0 to 10V (Lower Limit at 0)]*.
3	Signal type of analog input	Set DIP switch S1 on the control circuit board to the V-side (voltage) to set terminal AI2 only for voltage input. **Note:** Set this before you energize the drive.
4	Reference 3	Sets the value of *d1-03 [Reference 3]*.
5	Reference 4	Sets the value of *d1-04 [Reference 4]*.
6	Reference 5	Sets the value of *d1-05 [Reference 5]*.
7	Jog Reference	Sets *d1-17 [Jog Reference]* to the jog speed.
8	External digital input (3 inputs)	Set the *Multi-Step Speed Reference 1 to 3 [H1-xx = A, B, C]* to one of the MFDI terminals DI1 to DI7.
9	JOG command	Set the *Jog Reference [H1-xx = 6]* to one of the MFDI terminals DI1 to DI7.

Use the Maximum 17-Step Speed with All Digital Inputs

This section is the procedure to set the 17-step speeds (17 types of frequency references) without an analog input.

Procedure	Configuration Parameter	Task Contents
1	Analog reference	1. Sets *H3-02 = 0 [AI1 Function Selection = Through Mode]*, and disables the analog reference. 2. Sets *H3-10 = 0 [AI2 Function Selection = Through Mode]*, and disables the analog reference.
2	Reference 2 to 16	Sets the values of *d1-02 to d1-16 [Reference 2 to Reference 16]*.
3	Jog Reference	Sets *d1-17 [Jog Reference]* to the jog speed.
4	External digital input (4 inputs)	Set *Multi-Step Speed Reference 1 to 4 [H1-xx = A, B, C, D]* to one of the MFDI terminals DI1 to DI7.
5	JOG command	Set the *Jog Reference [H1-xx = 6]* to one of the MFDI terminals DI1 to DI7.

Multi-step Speed Operation Combinations

Refer to Table 12.26 and Figure 12.49 for information about multi-step speed reference combinations. The selected frequency reference changes when the combination of digital input signals from an external source changes.

Table 12.26 Multi-step Speed Reference and MFDI Terminal Combinations

Related Parameters	MultSpd Ref1 *H1-xx = A*	MultSpd Ref2 *H1-xx = B*	MultSpd Ref3 *H1-xx = C*	MultSpd Ref4 *H1-xx = D*	Jog Reference *H1-xx = 6*
Reference 1 (set in *b1-01*)	OFF	OFF	OFF	OFF	OFF
Reference 2 (*d1-02* or terminals AI1, AI2)	ON	OFF	OFF	OFF	OFF
Reference 3 (*d1-03* or terminals AI1, AI2)	OFF	ON	OFF	OFF	OFF
Reference 4 (*d1-04*)	ON	ON	OFF	OFF	OFF
Reference 5 (*d1-05*)	OFF	OFF	ON	OFF	OFF
Reference 6 (*d1-06*)	ON	OFF	ON	OFF	OFF
Reference 7 (*d1-07*)	OFF	ON	ON	OFF	OFF
Reference 8 (*d1-08*)	ON	ON	ON	OFF	OFF
Reference 9 (*d1-09*)	OFF	OFF	OFF	ON	OFF
Reference 10 (*d1-10*)	ON	OFF	OFF	ON	OFF
Reference 11 (*d1-11*)	OFF	ON	OFF	ON	OFF
Reference 12 (*d1-12*)	ON	ON	OFF	ON	OFF
Reference 13 (*d1-13*)	OFF	OFF	ON	ON	OFF
Reference 14 (*d1-14*)	ON	OFF	ON	ON	OFF
Reference 15 (*d1-15*)	OFF	ON	ON	ON	OFF

Related Parameters	MultSpd Ref1 *H1-xx = A*	MultSpd Ref2 *H1-xx = B*	MultSpd Ref3 *H1-xx = C*	MultSpd Ref4 *H1-xx = D*	Jog Reference *H1-xx = 6*
Reference 16 (*d1-16*)	ON	ON	ON	ON	OFF
Jog Reference (*d1-17*) *1	-	-	-	-	ON

*1 The Jog Frequency Reference (JOG command) overrides all other frequency references.

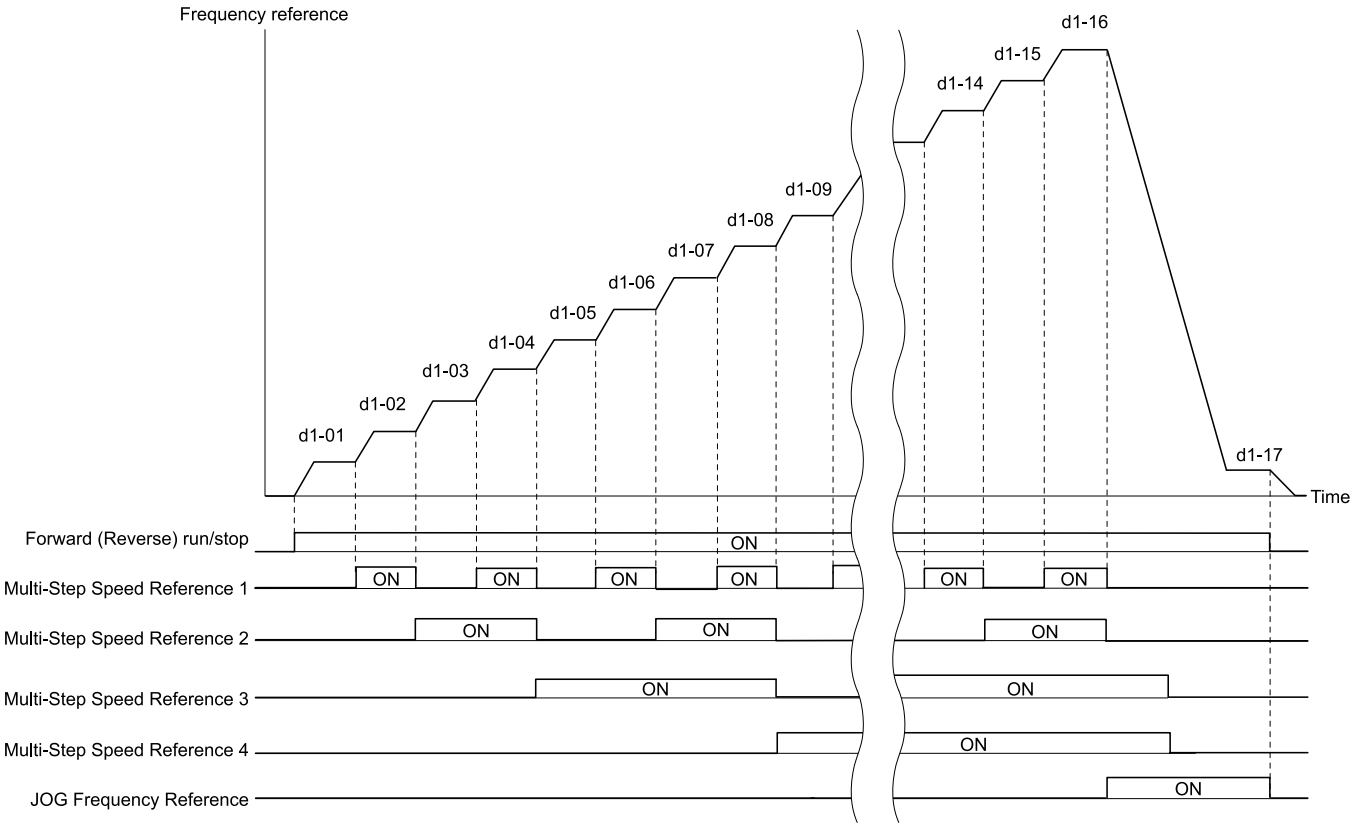

Figure 12.49 Time Chart for Multi-step Speed Reference/JOG Reference

■ d1-01: Reference 1

No. (Hex.)	Name	Description	Default (Range)
d1-01 (0280) RUN	Reference 1	V/f OLV OLV/PM AOLV/PM EZOLV Sets the frequency reference in the units from *o1-03 [FrqDisplay Unit Selection]*.	0.00 Hz (0.00 - 590.00 Hz)

Note:
- The upper limit value changes when the *E1-04 [Max Output Frequency]* and *d2-01 [FRef Upper Limit]* values change. Calculate the upper limit value with this formula:
  Upper limit value = (*E1-04*) × (*d2-01*) / 100
- When *A1-02 = 6 [Control Method = PM AOLVector]*, the drive sets *o1-03 = 1 [0.01% (100%=E1-04)]*.
- To set *d1-01* to 1-step speed parameter in a multi-step speed operation, set *b1-01 = 0 [Freq. Ref. Sel. 1 = Keypad]*.

■ d1-02: Reference 2

No. (Hex.)	Name	Description	Default (Range)
d1-02 (0281) RUN	Reference 2	V/f OLV OLV/PM AOLV/PM EZOLV Sets the frequency reference in the units from *o1-03 [FrqDisplay Unit Selection]*.	0.00 Hz (0.00 - 590.00 Hz)

Note:
- The upper limit value changes when the *E1-04 [Max Output Frequency]* and *d2-01 [FRef Upper Limit]* values change.
- When *A1-02 = 6 [Control Method = PM AOLVector]*, the drive sets *o1-03 = 1 [0.01% (100%=E1-04)]*.
- To set *d1-02* to Multi-Step Speed 2, set *H3-02 and H3-10 ≠ 1 [MFAI Function Select ≠ AuxFreqRef1]*.

■ d1-03: Reference 3

No. (Hex.)	Name	Description	Default (Range)
d1-03 (0282) RUN	Reference 3	V/f OLV OLV/PM AOLV/PM EZOLV Sets the frequency reference in the units from *o1-03 [FrqDisplay Unit Selection]*.	0.00 Hz (0.00 - 590.00 Hz)

Note:
- The upper limit value changes when the *E1-04 [Max Output Frequency]* and *d2-01 [FRef Upper Limit]* values change.
- When *A1-02 = 6 [Control Method = PM AOLVector]*, the default setting is *o1-03 = 1 [0.01% (100%=E1-04)]*.
- To set *d1-03* to Multi-Step Speed 3, set *H3-02 and H3-10 ≠ 3 [MFAI Function Select ≠ AuxFreqRef2]*.

■ d1-04: Reference 4

No. (Hex.)	Name	Description	Default (Range)
d1-04 (0283) RUN	Reference 4	V/f OLV OLV/PM AOLV/PM EZOLV Sets the frequency reference in the units from *o1-03 [FrqDisplay Unit Selection]*.	0.00 Hz (0.00 - 590.00 Hz)

Note:
- The upper limit value changes when the *E1-04 [Max Output Frequency]* and *d2-01 [FRef Upper Limit]* values change.
- When *A1-02 = 6 [Control Method = PM AOLVector]*, the drive sets *o1-03 = 1 [0.01% (100%=E1-04)]*.
- This parameter sets the frequency reference of Multi-Step Speed 4.

■ d1-05: Reference 5

No. (Hex.)	Name	Description	Default (Range)
d1-05 (0284) RUN	Reference 5	V/f OLV OLV/PM AOLV/PM EZOLV Sets the frequency reference in the units from *o1-03 [FrqDisplay Unit Selection]*.	0.00 Hz (0.00 - 590.00 Hz)

Note:
- The upper limit value changes when the *E1-04 [Max Output Frequency]* and *d2-01 [FRef Upper Limit]* values change.
- When *A1-02 = 6 [Control Method = PM AOLVector]*, the drive sets *o1-03 = 1 [0.01% (100%=E1-04)]*.
- This parameter sets the frequency reference of Multi-Step Speed 5.

■ d1-06: Reference 6

No. (Hex.)	Name	Description	Default (Range)
d1-06 (0285) RUN	Reference 6	V/f OLV OLV/PM AOLV/PM EZOLV Sets the frequency reference in the units from *o1-03 [FrqDisplay Unit Selection]*.	0.00 Hz (0.00 - 590.00 Hz)

Note:
- The upper limit value changes when the *E1-04 [Max Output Frequency]* and *d2-01 [FRef Upper Limit]* values change.
- When *A1-02 = 6 [Control Method = PM AOLVector]*, the drive sets *o1-03 = 1 [0.01% (100%=E1-04)]*.
- This parameter sets the frequency reference of Multi-Step Speed 6.

■ d1-07: Reference 7

No. (Hex.)	Name	Description	Default (Range)
d1-07 (0286) RUN	Reference 7	V/f OLV OLV/PM AOLV/PM EZOLV Sets the frequency reference in the units from *o1-03 [FrqDisplay Unit Selection]*.	0.00 Hz (0.00 - 590.00 Hz)

Note:
- The upper limit value changes when the *E1-04 [Max Output Frequency]* and *d2-01 [FRef Upper Limit]* values change.
- When *A1-02 = 6 [Control Method = PM AOLVector]*, the drive sets *o1-03 = 1 [0.01% (100%=E1-04)]*.
- This parameter sets the frequency reference of Multi-Step Speed 7.

■ d1-08: Reference 8

No. (Hex.)	Name	Description	Default (Range)
d1-08 (0287) RUN	Reference 8	V/f OLV OLV/PM AOLV/PM EZOLV Sets the frequency reference in the units from *o1-03 [FrqDisplay Unit Selection]*.	0.00 Hz (0.00 - 590.00 Hz)

Note:
- The upper limit value changes when the *E1-04 [Max Output Frequency]* and *d2-01 [FRef Upper Limit]* values change.
- When *A1-02 = 6 [Control Method = PM AOLVector]*, the drive sets *o1-03 = 1 [0.01% (100%=E1-04)]*.
- This parameter sets the frequency reference of Multi-Step Speed 8.

■ d1-09: Reference 9

No. (Hex.)	Name	Description	Default (Range)
d1-09 (0288) RUN	Reference 9	V/f OLV OLV/PM AOLV/PM EZOLV Sets the frequency reference in the units from *o1-03 [FrqDisplay Unit Selection]*.	0.00 Hz (0.00 - 590.00 Hz)

Note:
- The upper limit value changes when the *E1-04 [Max Output Frequency]* and *d2-01 [FRef Upper Limit]* values change.
- When *A1-02 = 6 [Control Method = PM AOLVector]*, the drive sets *o1-03 = 1 [0.01% (100%=E1-04)]*.
- This parameter sets the frequency reference of Multi-Step Speed 9.

■ d1-10: Reference 10

No. (Hex.)	Name	Description	Default (Range)
d1-10 (028B) RUN	Reference 10	V/f OLV OLV/PM AOLV/PM EZOLV Sets the frequency reference in the units from *o1-03 [FrqDisplay Unit Selection]*.	0.00 Hz (0.00 - 590.00 Hz)

Note:
- The upper limit value changes when the *E1-04 [Max Output Frequency]* and *d2-01 [FRef Upper Limit]* values change.
- When *A1-02 = 6 [Control Method = PM AOLVector]*, the drive sets *o1-03 = 1 [0.01% (100%=E1-04)]*.
- This parameter sets the frequency reference of Multi-Step Speed 10.

■ d1-11: Reference 11

No. (Hex.)	Name	Description	Default (Range)
d1-11 (028C) RUN	Reference 11	V/f OLV OLV/PM AOLV/PM EZOLV Sets the frequency reference in the units from *o1-03 [FrqDisplay Unit Selection]*.	0.00 Hz (0.00 - 590.00 Hz)

Note:
- The upper limit value changes when the *E1-04 [Max Output Frequency]* and *d2-01 [FRef Upper Limit]* values change.
- When *A1-02 = 6 [Control Method = PM AOLVector]*, the drive sets *o1-03 = 1 [0.01% (100%=E1-04)]*.
- This parameter sets the frequency reference of Multi-Step Speed 11.

■ d1-12: Reference 12

No. (Hex.)	Name	Description	Default (Range)
d1-12 (028D) RUN	Reference 12	V/f OLV OLV/PM AOLV/PM EZOLV Sets the frequency reference in the units from *o1-03 [FrqDisplay Unit Selection]*.	0.00 Hz (0.00 - 590.00 Hz)

Note:
- The upper limit value changes when the *E1-04 [Max Output Frequency]* and *d2-01 [FRef Upper Limit]* values change.
- When *A1-02 = 6 [Control Method = PM AOLVector]*, the drive sets *o1-03 = 1 [0.01% (100%=E1-04)]*.
- This parameter sets the frequency reference of Multi-Step Speed 12.

■ d1-13: Reference 13

No. (Hex.)	Name	Description	Default (Range)
d1-13 (028E) RUN	Reference 13	V/f OLV OLV/PM AOLV/PM EZOLV Sets the frequency reference in the units from *o1-03 [FrqDisplay Unit Selection]*.	0.00 Hz (0.00 - 590.00 Hz)

Note:
- The upper limit value changes when the *E1-04 [Max Output Frequency]* and *d2-01 [FRef Upper Limit]* values change.
- When *A1-02 = 6 [Control Method = PM AOLVector]*, the drive sets *o1-03 = 1 [0.01% (100%=E1-04)]*.
- This parameter sets the frequency reference of Multi-Step Speed 13.

■ d1-14: Reference 14

No. (Hex.)	Name	Description	Default (Range)
d1-14 (028F) RUN	Reference 14	V/f OLV OLV/PM AOLV/PM EZOLV Sets the frequency reference in the units from *o1-03 [FrqDisplay Unit Selection]*.	0.00 Hz (0.00 - 590.00 Hz)

Note:
- The upper limit value changes when the *E1-04 [Max Output Frequency]* and *d2-01 [FRef Upper Limit]* values change.
- When *A1-02 = 6 [Control Method = PM AOLVector]*, the drive sets *o1-03 = 1 [0.01% (100%=E1-04)]*.
- This parameter sets the frequency reference of Multi-Step Speed 14.

■ d1-15: Reference 15

No. (Hex.)	Name	Description	Default (Range)
d1-15 (0290) RUN	Reference 15	V/f OLV OLV/PM AOLV/PM EZOLV Sets the frequency reference in the units from *o1-03 [FrqDisplay Unit Selection]*.	0.00 Hz (0.00 - 590.00 Hz)

Note:
- The upper limit value changes when the *E1-04 [Max Output Frequency]* and *d2-01 [FRef Upper Limit]* values change.
- When *A1-02 = 6 [Control Method = PM AOLVector]*, the drive sets *o1-03 = 1 [0.01% (100%=E1-04)]*.
- This parameter sets the frequency reference of Multi-Step Speed 15.

■ d1-16: Reference 16

No. (Hex.)	Name	Description	Default (Range)
d1-16 (0291) RUN	Reference 16	V/f OLV OLV/PM AOLV/PM EZOLV Sets the frequency reference in the units from *o1-03 [FrqDisplay Unit Selection]*.	0.00 Hz (0.00 - 590.00 Hz)

Note:
- The upper limit value changes when the *E1-04 [Max Output Frequency]* and *d2-01 [FRef Upper Limit]* values change.
- When *A1-02 = 6 [Control Method = PM AOLVector]*, the drive sets *o1-03 = 1 [0.01% (100%=E1-04)]*.
- This parameter sets the frequency reference of Multi-Step Speed 16.

■ d1-17: Jog Reference

No. (Hex.)	Name	Description	Default (Range)
d1-17 (0292) RUN	Jog Reference	V/f OLV OLV/PM AOLV/PM EZOLV Sets the Jog frequency reference in the units from *o1-03 [FrqDisplay Unit Selection]*. Set *H1-xx = 6 [MFDI Function Select = Jog Reference]* to use the Jog frequency reference.	6.00 Hz (0.00 - 590.00 Hz)

Note:
- The upper limit value changes when the *E1-04 [Max Output Frequency]* and *d2-01 [FRef Upper Limit]* values change.
- When *A1-02 = 6 [Control Method = PM AOLVector]*, the drive sets *o1-03 = 1 [0.01% (100%=E1-04)]*.

◆ d2: REFERENCE LIMITS

d2 parameters set the upper and lower frequency limits to control the motor speed. Apply these parameters to for example, run the motor at low-speed due to mechanical strength concerns, or if the motor should not be run at low speed because of lubrication issues with the gears and bearings.

The upper frequency limit is set in *d2-01 [FRef Upper Limit]* and the lower limit is set in *d2-02 [FRef Lower Limit]*.

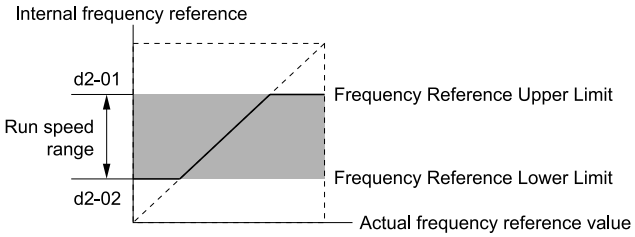

Figure 12.50 Upper and Lower Frequency Limits

■ d2-01: FRef Upper Limit

No. (Hex.)	Name	Description	Default (Range)
d2-01 (0289)	FRef Upper Limit	V/f OLV OLV/PM AOLV/PM EZOLV Sets maximum limit for all frequency references. The maximum output frequency is 100%.	100.0% (0.0 - 110.0%)

When the frequency reference is more than the value set in *d2-01* the drive will continue to operate at the value set in *d2-01*.

■ d2-02: FRef Lower Limit

No. (Hex.)	Name	Description	Default (Range)
d2-02 (028A)	FRef Lower Limit	V/f OLV OLV/PM AOLV/PM EZOLV Sets minimum limit for all frequency references. The maximum output frequency is 100%.	0.0% (0.0 - 110.0%)

When the frequency reference is less than the value set in *d2-02*, the drive will continue to operate at the value set in *d2-02*. The motor will accelerate to the *d2-02* value after the drive receives a Run command and a lower frequency reference than *d2-02* has been entered.

■ d2-03: Analog FRef Lower Limit

No. (Hex.)	Name	Description	Default (Range)
d2-03 (0293)	Analog FRef Lower Limit	V/f OLV OLV/PM AOLV/PM EZOLV Sets the lower limit for the master frequency reference (the first frequency of the multi-step speed reference) as a percentage. The maximum output frequency is 100%.	0.0% (0.0 - 110.0%)

This parameter does not change the lower limit of Jog reference, frequency reference for multi-step speed operation, or the auxiliary frequency reference.

The drive operates at the value set in *d2-03* when the frequency reference decreases to less than the value set in *d2-03*.

Note:

When lower limits are set to parameters *d2-02 [FRef Lower Limit]* and *d2-03*, the drive uses the larger value as the lower limit.

◆ d3: JUMP FREQUENCY

The Jump frequency is a function that sets the dead band to a specified frequency band. If a machine that operated at constant speed is operated with variable speed, it can make resonance. To operate the machine without resonance from the natural frequency of the machinery mechanical system, use a frequency band jump.

You can program the drive to have three different Jump frequencies. Set *d3-01 to d3-03 [Jump Frequency 1 to Jump Frequency 3]* to the median value for the jumped frequency and set *d3-04 [Jump Frequency Width]* to the Jump frequency width.

When you input a frequency reference that is the same as or near the Jump frequency width, the frequency reference changes automatically.

The drive accelerates or decelerates the motor smoothly until the frequency reference is not in the range of the Jump frequency band. The drive will use the active accel/decel time to go through the specified dead band range. If the frequency reference is not in the range of the Jump frequency band, switch to constant speed operation.

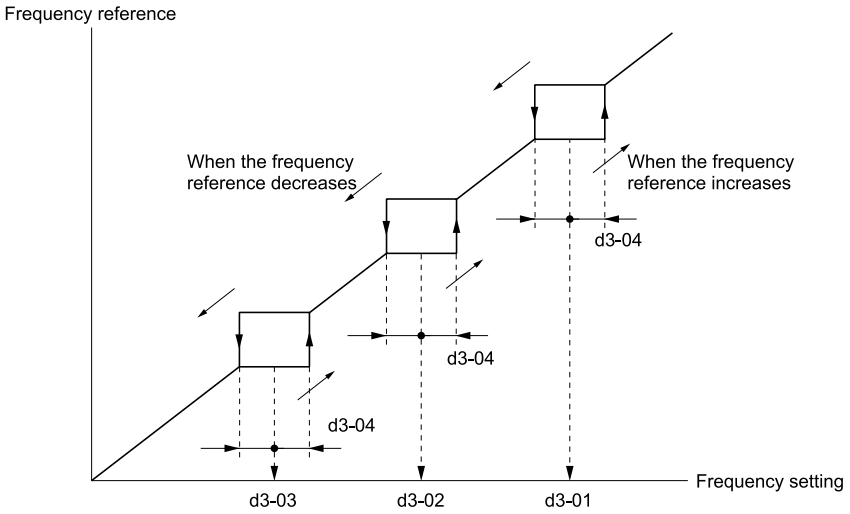

Figure 12.51 Jump Frequency

Note:
- When you set Jump Frequencies 1 to 3, make sure that the parameters do not overlap.
- When the drive is in the range of the Jump frequency, the frequency reference changes automatically. When Jump is executed, the output frequency changes smoothly as specified by the values set in *C1-01 [Accel Time 1]* and *C1-02 [Decel Time 1]*.

■ d3-01: Jump Frequency 1

No. (Hex.)	Name	Description	Default (Range)
d3-01 (0294)	Jump Frequency 1	V/f OLV OLV/PM AOLV/PM EZOLV Sets the median value of the frequency band that the drive will avoid.	0.0 Hz (Determined by A1-02)

Note:
Set this parameter to 0.0 Hz to disable the Jump frequency.

■ d3-02: Jump Frequency 2

No. (Hex.)	Name	Description	Default (Range)
d3-02 (0295)	Jump Frequency 2	V/f OLV OLV/PM AOLV/PM EZOLV Sets the median value of the frequency band that the drive will avoid.	0.0 Hz (Determined by A1-02)

Note:
Set this parameter to 0.0 Hz to disable the Jump frequency.

■ d3-03: Jump Frequency 3

No. (Hex.)	Name	Description	Default (Range)
d3-03 (0296)	Jump Frequency 3	V/f OLV OLV/PM AOLV/PM EZOLV Sets the median value of the frequency band that the drive will avoid.	0.0 Hz (Determined by A1-02)

Note:
Set this parameter to 0.0 Hz to disable the Jump frequency.

■ d3-04: Jump Frequency Width

No. (Hex.)	Name	Description	Default (Range)
d3-04 (0297)	Jump Frequency Width	V/f OLV OLV/PM AOLV/PM EZOLV Sets the width of the frequency band that the drive will avoid.	1.0 Hz (Determined by A1-02)

◆ d4: FREQUENCY UP/DOWN

The *d4 parameters* set the Frequency Reference Hold function and Up/Down and Up/Down 2 commands.

WARNING! *Sudden Movement Hazard. When you use the drive in a lifting application, you must also install external safety circuitry. The drive does not have protection against accidental load drops in lifting applications. Install electrical and/or mechanical safety circuit mechanisms that are isolated from the drive circuitry. If you do not use external safety circuitry, the drive could drop the load and cause serious injury or death.*

WARNING! *Sudden Movement Hazard. When you use a mechanical holding brake with the drive in a lifting application, you must close the brake if an input terminal triggers the Baseblock command to stop drive output. If you enter the baseblock command, the motor will suddenly coast and the load will slip, which can cause serious injury or death.*

- Frequency Reference Hold Function Command: This acceleration/deceleration ramp hold command uses an MFDI to momentarily stop the acceleration/deceleration of the motor, and continues to operate the motor at the output frequency at which the command reference was input. Turn OFF the acceleration/deceleration ramp hold command to continue acceleration/deceleration.
  With a crane for example, use the function and a 2-stage push button to stop acceleration and operate at low speed with one of the output frequencies.
- Up/Down command: The Up/Down command is a function to activate and deactivate an MFDI to increase and decrease the frequency reference. The Up/Down command overrides frequency references from the analog input terminal, pulse train input terminal, and keypad.
- Up/Down 2 command: The Up/Down 2 command is a function that adds a set bias value to the frequency reference to accelerate or decelerate. The Up/Down 2 command activates and deactivates the MFDI to add a bias value.

■ d4-01: FRef Hold Selection

No. (Hex.)	Name	Description	Default (Range)
d4-01 (0298)	FRef Hold Selection	V/f OLV OLV/PM AOLV/PM EZOLV Sets the function that saves the frequency reference or the frequency bias (Up/Down 2) after a Stop command or when de-energizing the drive.	0 (0, 1)

Set *H1-xx [MFDI Function Select]* to one of these values to enable this parameter:

- *17 [Ac/Dec Hold]*
- *62/63 [Up Command/Down Command]*
- *65/66 [Up2 Command/Dw2 Command]*

0 : Disabled

- Acceleration/Deceleration Ramp Hold
  When you enter a Stop command or de-energize the drive, the hold value is reset to 0 Hz. The drive will use the active frequency reference when it restarts.
- Up/Down Command
  When you enter a Stop command or de-energize the drive, the frequency reference value is reset to 0 Hz. The drive will start from 0 Hz when it restarts.
- Up/Down 2 Command
  When you enter the Stop command or 5 s after you release the Up/Down 2 command, the drive does not save the frequency bias. The Up/Down 2 function will start with a bias of 0% when the drive restarts.

1 : Enabled

- Acceleration/Deceleration Ramp Hold
  When you clear the Run command or de-energize the drive, it will save the last hold value. The drive will use the saved value as the frequency reference when it restarts.

  Note:
  When you energize the drive, continuously enable the MFDI terminal set for *Ac/Dec Hold [H1-xx = 17]*. If the digital input does not activate, the drive will clear the hold value and set it to 0 Hz.

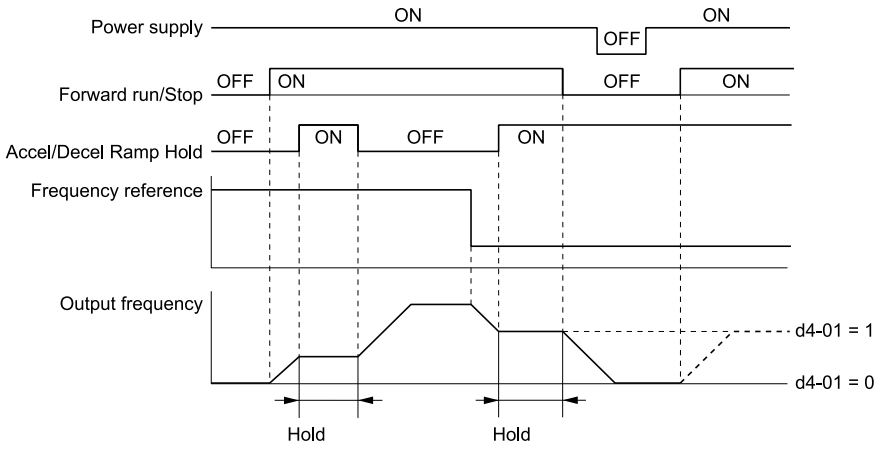

Figure 12.52 Frequency Reference Hold with Accel/Decel Hold Function

- Up/Down Command
  When you clear the Run command or de-energize the drive, it will save the frequency reference value. The drive will use the saved value as the frequency reference when it restarts.
- Up/Down 2 Command with Frequency Reference from Keypad
  When a Run command is active and you release the Up/Down 2 command for longer than 5 s, the drive adds the Up/Down 2 bias value to the frequency reference and sets it to 0. The drive saves the frequency reference value to which the bias value was added. The drive will use the new value as the frequency reference when it restarts.

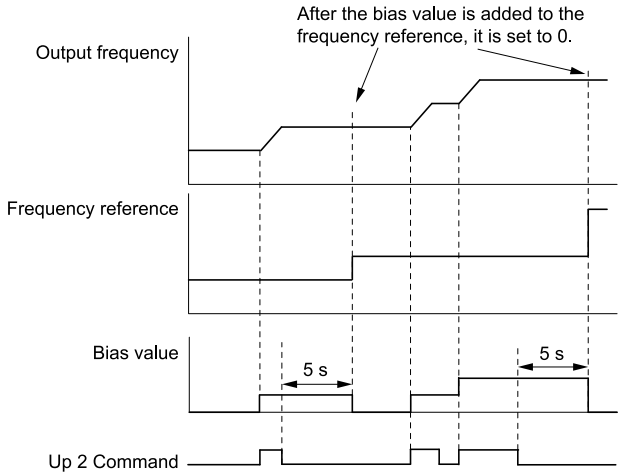

Figure 12.53 Up/Down 2 Example with Reference from Keypad and d4-01 = 1

- Up/Down 2 Command with Frequency Reference from Input Sources Other Than the Keypad
  When a Run command is active and you release the Up/Down 2 command for longer than 5 s, the drive will save the bias value in *d4-06 [FRef Bias(Up/Dw2)]*. The drive saves the frequency reference + *d4-06* as a frequency reference value. The drive will use the new value as the frequency reference when it restarts.

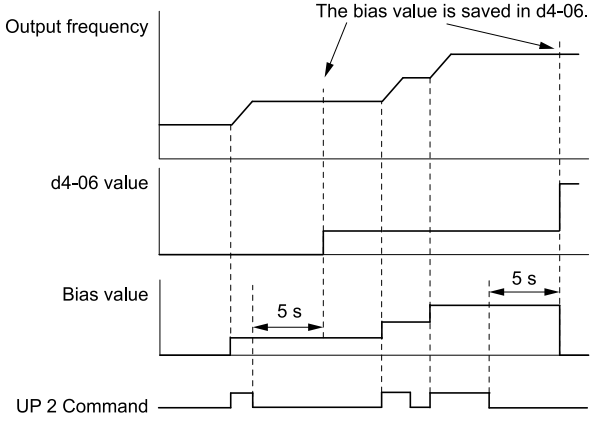

Figure 12.54 Up/Down 2 Example with Other Reference than Keypad and d4-01 = 1

Note:
To use the combination of the frequency reference hold function and the Up/Down 2 function, configure the Up/Down 2 upper limit *[d4-08]* and lower limit *[d4-09]* correctly.

Remove the Saved Frequency Reference Value

The procedure to remove the saved frequency reference value is different for different functions. Use these methods to remove the value:

- Release the input programmed for *Ac/Dec Hold [H1-xx = 17]*.
- Set an Up or Down command while no Run command is active.
- Use the Up/Down 2 Command to set *d4-06 = 0.0* or set *d4-06 = 0.0* during stop.

■ d4-03: Up/Dw2 Bias Step Frequency

No. (Hex.)	Name	Description	Default (Range)
d4-03 (02AA) RUN	Up/Dw2 Bias Step Frequency	V/f OLV OLV/PM AOLV/PM EZOLV Sets the bias that the Up/Down 2 function adds to or subtracts from the frequency reference.	0.00 Hz (0.00 - 99.99 Hz)

The operation is different for different setting values:

- **Setting d4-03 = 0.00 Hz**
  When *H1-xx = 65, 66 [d4-03: Up2 Command, d4-03: Dw2 Command]* is active, the drive uses the accel/decel times set in *d4-04 [d4-03: Up/Dw2 Ramp Selection]* to increase or decrease the bias value.

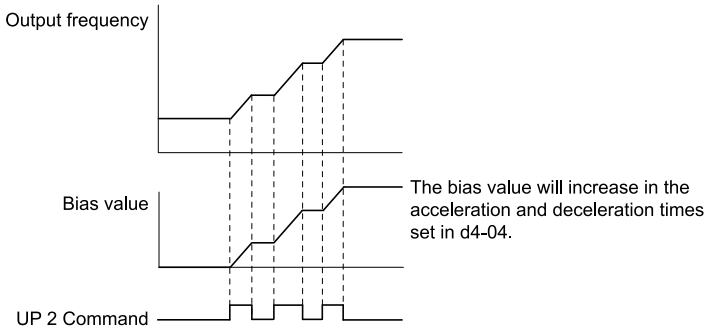

Figure 12.55 Up/Down 2 Bias when d4-03 = 0.00 Hz

- **Setting d4-03 ≠ 0.00 Hz**
  When *H1-xx = 65, 66 [d4-03: Up2 Command, d4-03: Dw2 Command]* is active, the drive increases or decreases the bias in steps for the value set in *d4-03*. The drive uses the acceleration and deceleration times set in *d4-04*.

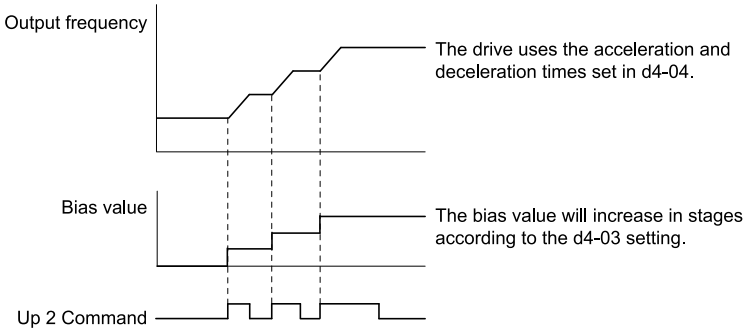

Figure 12.56 Up/Down 2 Bias when d4-03 ≠ 0.00 Hz

■ d4-04: Up/Dw2 Ramp Selection

No. (Hex.)	Name	Description	Default (Range)
d4-04 (02AB) RUN	Up/Dw2 Ramp Selection	V/f OLV OLV/PM AOLV/PM EZOLV Sets the acceleration and deceleration times for the Up/Down 2 function to apply the bias to the frequency reference.	0 (0, 1)

0 : Current Ac/Dec Time

Use the active acceleration and deceleration times to increase or decrease the bias.

1 : Ac/Dec 4

Use *C1-07 [Accel Time 4]* and *C1-08 [Decel Time 4]* to increase or decrease the bias.

■ d4-05: Up/Dw2 Bias Mode Selection

No. (Hex.)	Name	Description	Default (Range)
d4-05 (02AC) RUN	Up/Dw2 Bias Mode Selection	V/f OLV OLV/PM AOLV/PM EZOLV Sets the function that saves the bias value to the drive when you open or close the two *Up2 Command, Dw2 Command [H1-xx = 65, 66]*. Set *d4-03 [Up/Dw2 Bias Step Frequency] = 0.00* before you set this parameter.	0 (0, 1)

0 : Hold@Up=Dw=0

When the two MFDI terminals set for *Up2 Command, Dw2 Command [H1-xx = 65, 66]* activate or deactivate, the drive will hold the bias value.

1 : Reset@Up=Dw

When the two MFDI terminals set for *Up2 Command, Dw2 Command [H1-xx = 65, 66]* activate or deactivate, the drive will reset the bias value to 0. The drive will use the acceleration and deceleration times set in *d4-04 [Up/Dw2 Ramp Selection]* to accelerate and decelerate the motor to the selected output frequency.

■ d4-06: FRef Bias(Up/Dw2)

No. (Hex.)	Name	Description	Default (Range)
d4-06 (02AD)	FRef Bias(Up/Dw2)	V/f OLV OLV/PM AOLV/PM EZOLV Saves the bias value from the Up/Down 2 Command where the Maximum Output Frequency is 100%.	0.0% (-99.9 - +100.0%)

The Up/Down 2 function setting changes the function of *d4-06*:

Note:

When the keypad sets the frequency reference, you do not usually use parameter *d4-06*.

- When *d4-01 = 0 [FRef Hold Selection = Disabled]* and a source other than the keypad sets the frequency reference, the drive adds the value set in *d4-06* to the frequency reference. If the value set in *d4-06* is a negative number, the drive will subtract it from frequency reference.
- When *d4-01 = 1 [Enabled]* and a source other than the keypad sets the frequency reference, the drive will store the bias value adjusted with the Up/Down 2 command in *d4-06* 5 seconds after you release the Up/Down 2 command. The drive adds or subtracts the value set in *d4-06* to the frequency reference.

Conditions that Reset or Disable d4-06

The drive resets and disables the bias value in these conditions:

- *d4-01 = 0* and the Run command was cleared.
- *H1-xx = 65, 66 [MFDI Function Select = Up2 Command, Dw2 Command]* is not set.
- The frequency reference source was changed.
  This includes switching LOCAL/REMOTE and multi-step speed reference.
- A digital input changed the frequency reference value.
- *d4-03 [Up/Dw2 Bias Step Frequency] = 0* and *d4-05 = 1 [Up/Dw2 Bias Mode Selection = Reset@Up= DwReset when Neither / Both Closed]*, and the two MFDI terminals set for *H1-xx = 65/66 [Up2 Command/Dw2 Command]* are activated or deactivated.
- The value of *E1-04 [Max Output Frequency]* was changed.

■ d4-07: Analog FRef Fluctuate Limit

No. (Hex.)	Name	Description	Default (Range)
d4-07 (02AE) RUN	Analog FRef Fluctuate Limit	V/f OLV OLV/PM AOLV/PM EZOLV If the frequency reference changes for more than the level set to this parameter, then the bias value will be held. The value is set as a percentage of the Maximum Output Frequency.	1.0% (0.1 - 100.0%)

Handles frequency reference changes while *H1-xx = 65, 66 [Up2 Command, Dw2 Command]* is activated. When the frequency reference changes for more than the level set in *d4-07*, the drive will hold the bias value, and the drive will accelerate or decelerate to the frequency reference. When the drive is at the frequency reference, it releases the bias hold and the bias follows the Up/Down 2 input commands.

This parameter is applicable only when an analog or pulse input sets the frequency reference.

■ d4-08: Up/Dw2 Bias Upper Limit

No. (Hex.)	Name	Description	Default (Range)
d4-08 (02AF) RUN	Up/Dw2 Bias Upper Limit	V/f OLV OLV/PM AOLV/PM EZOLV Sets the upper limit of the Up/Down 2 bias as a percentage of the Maximum Output Frequency.	100.0% (0.0 - 100.0%)

The drive saves the set bias upper limit in *d4-06 [FRef Bias(Up/Dw2)]*. Set *d4-08* an applicable value before you use the Up/Down 2 function.

Note:

When *d4-01 = 1 [FRef Hold Selection = Enabled]* and *b1-01 = 0 [Freq. Ref. Sel. 1 = Keypad]*, the drive will add the bias value to the frequency reference when it does not receive an Up/Down 2 command for 5 s. Then the drive will reset the value to 0 at which time you can increase the bias to the limit set in *d4-08* again.

■ d4-09: Up/Dw2 Bias Lower Limit

No. (Hex.)	Name	Description	Default (Range)
d4-09 (02B0) RUN	Up/Dw2 Bias Lower Limit	V/f OLV OLV/PM AOLV/PM EZOLV Sets the lower limit of the Up/Down 2 bias as a percentage of the Maximum Output Frequency.	0.0% (-99.9 - 0.0%)

The drive saves the set bias lower limit in *d4-06 [FRef Bias(Up/Dw2)]*. Set *d4-09* to an applicable value before you use the Up/Down 2 function.

Note:

When *d4-01 = 1 [FRef Hold Selection = Enabled]* and *b1-01 = 0 [Freq. Ref. Sel. 1 = Keypad]*, the drive will add the bias value to the frequency reference when it does not receive an Up/Down 2 command for 5 s. Then the drive will reset the value to 0.

If you increase the bias with the Up 2 command and *d4-09 = 0*, you cannot use a Down 2 command to decrease the frequency reference. To decrease speed in this condition, set a negative lower limit in *d4-09*.

■ d4-10: Up/Dw Frq Low Limit Select

No. (Hex.)	Name	Description	Default (Range)
d4-10 (02B6)	Up/Dw Frq Low Limit Select	V/f OLV OLV/PM AOLV/PM EZOLV Sets the lower frequency limit for the Up/Down function.	0 (0, 1)

0 : d2-02/Analog (larger level)

The higher value between *d2-02 [FRef Lower Limit]* and an analog input programmed for *Frequency Reference [H3-02, H3-10 = 0]* sets the lower frequency reference limit.

Note:

When you use *Ext Ref 1/2 [H1-xx = 9]* to switch between the Up/Down function and an analog input as the reference source, the analog value becomes the lower reference limit when the Up/Down command is active. Set *d4-10 = 1* to isolate the Up/Down function and the analog input value.

1 : d2-02

You can only use *d2-02* to set the lower limit of the frequency reference.

■ d4-11: Bi-Dir Out Selection

No. (Hex.)	Name	Description	Default (Range)
d4-11 (02B7)	Bi-Dir Out Selection	V/f OLV OLV/PM AOLV/PM EZOLV Sets the function that changes the frequency reference to a Bi-Directional internal frequency reference.	0 (0, 1)

0 : Disabled

The drive will not change the frequency reference or PID output value to Bi-Directional internal frequency reference.

When the frequency reference or PID output value is 0% to 100% of the maximum output frequency, the drive runs the motor in the set direction.

1 : Enabled

Changes the frequency reference or PID output value to Bi-Directional output.

When the frequency reference or PID output value is 0% to 50%, the drive reverses the motor in the set direction. When the frequency reference or PID output value is 50% to 100%, the drive operates the motor in the set direction.

Note:

When you use the Bi-Directional function with PID control, you can use an MFDI terminal set for *PID BiDir [H1-xx = 7A]* to enable/disable the Bi-Directional function.

Table 12.27 shows how the drive operates when you use the PID control function with the Bi-Directional function and *d4-11 = 1*.

Table 12.27 Bi-Directional Function Operation Conditions

b5-01 [PID Enable] Setting	Status of MFDI Terminal Set for 7A [PID BiDir]	
	ON	OFF
b5-01 = 0 [Disabled]	Bi-Directional function enabled	Bi-Directional function enabled
b5-01 = 1 [Enabled]	Bi-Directional function enabled	Normal operation (Bi-Directional function disables)

- **When PID Control is Disabled or *H1-xx = 6A [MFDI Function Select = PID Disable]* is Activated**
  When the frequency reference is 0% to 50%, the drive reverses the motor in the set direction. When the frequency reference is 50% to 100%, the drive runs the motor in the set direction. Figure 12.57 shows the frequency reference change at this time. This is an example of operation when the Forward Run command is input.

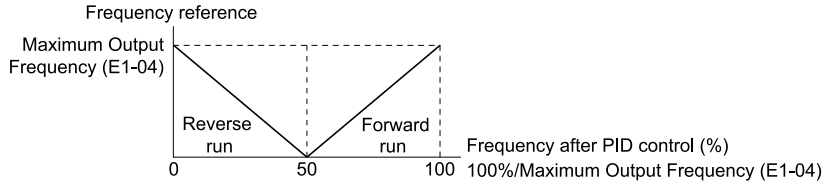

Figure 12.57 Frequency Reference Transition when PID Control is Disabled or PID Disable is ON

Note:

When *b1-04 = 1 [Reverse Operation Selection = Reverse Disabled]*, the drive will not run in Reverse. The frequency reference limit is 0 Hz.

- **When PID Control is Enabled and *H1-xx = 7A [PID BiDir]* is Activated**
  When the frequency reference is 0% to 50% after PID control execution, the drive runs the motor opposite of the set direction. When the frequency reference is 50% to 100%, the drive runs the motor in the set direction. Figure 12.58 shows the frequency reference change at this time. This is an example of operation when the Forward Run command is input.

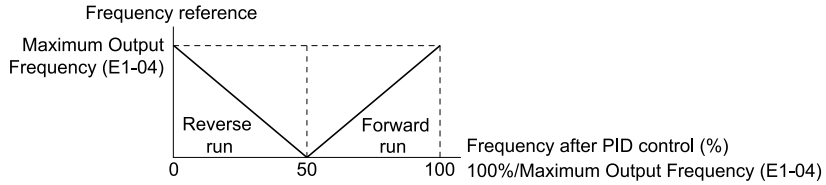

Figure 12.58 Frequency Reference Transition when PID Control and PID Bi-Directional are Enabled

Note:

When *b1-04 = 1*, the drive will not run the motor in Reverse. The frequency reference limit is 0 Hz.

- **When PID Control is Enabled and *H1-xx = 7A* is Deactivated**
  The Bi-Directional function is disabled. When the frequency reference is a negative value after PID control execution, the drive runs the motor opposite of the set direction. The frequency reference value is an absolute value.

■ d4-12: Stop Position Gain

No. (Hex.)	Name	Description	Default (Range)
d4-12 (02B8)	Stop Position Gain	V/f OLV OLV/PM AOLV/PM EZOLV Sets the gain to adjust the stopping accuracy. Set this parameter when *b1-03 = 9 [Stopping Method Selection = Distance Stop]*.	1.00 (0.50 - 2.55)

If the motor stops before the necessary stop position, increase the setting value. If the length of time for the motor to stop is too long, decrease the setting value.

◆ d6: FIELD WEAKENING / FORCING

d6 parameters set the field weakening and field forcing functions.

The field weakening function decreases the energy consumption of the motor. It decreases the output voltage of the drive to a set level. The function decreases the motor excitation current inversely proportional to speed in a constant output range, and does not let the induced voltage of the motor become more than the power supply voltage. To enable this function, set *Field weakening [H1-xx = 44]* ON.

Note:

Use the Field Weakening function in constant light-load applications. To control the energy consumption of the motor for other load conditions, use the parameters *b8: ENERGY SAVING*.

The Field Forcing function adjusts the delaying influence of the motor time constant when the drive changes the excitation current reference and it also increases motor responsiveness. This function uses a high motor excitation current reference for drive start-up only to help develop actual motor excitation current. Enable the Field Forcing function to increase motor responsiveness.

Note:

You cannot use Field Forcing during DC Injection Braking.

■ d6-01: Field Weak Level

No. (Hex.)	Name	Description	Default (Range)
d6-01 (02A0)	Field Weak Level	V/f OLV OLV/PM AOLV/PM EZOLV Sets the drive output voltage as a percentage of *E1-05 [Field Force Selection]* when *H1-xx = 44 [Field weakening]* is activated.	80% (0 - 100%)

■ d6-02: Field Weak FqLimit

No. (Hex.)	Name	Description	Default (Range)
d6-02 (02A1)	Field Weak FqLimit	V/f OLV OLV/PM AOLV/PM EZOLV Sets the minimum output frequency to start field weakening.	0.0 Hz (0.0 - 590.0 Hz)

Make sure that these two conditions are correct to enable the Field Weakening command:

- The output frequency ≥ *d6-02*.
- There is a speed agreement status.

■ d6-03: Field Force Selection

No. (Hex.)	Name	Description	Default (Range)
d6-03 (02A2)	Field Force Selection	V/f OLV OLV/PM AOLV/PM EZOLV Sets the field forcing function.	0 (0, 1)

0 : Disabled

1 : Enabled

■ d6-06: Field Force Limit

No. (Hex.)	Name	Description	Default (Range)
d6-06 (02A5)	Field Force Limit	V/f OLV OLV/PM AOLV/PM EZOLV Sets the limit value for field forcing to increase the motor excitation current reference as a percentage of *E2-03 [Mot No-Load Current]*. Usually it is not necessary to change this setting.	400% (100 - 400%)

Note:

You cannot use Field Forcing during DC Injection Braking.

◆ d7: OFFSET FREQUENCY

The drive will use 3 digital signal inputs, to add or subtract the set frequency (Offset frequency) to/from the frequency reference and correct the speed. The drive uses the terminal set in *H1-xx = 0E to 10 [MFDI Function Select = Offset Frq 1 to Offset Frq 3]* to set the Offset frequency. When you close more than one input at the same time, the drive adds the selected offset values together.

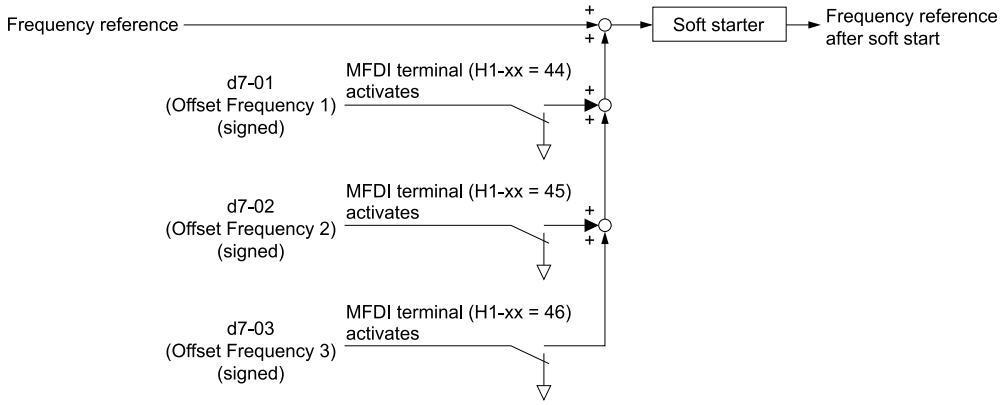

Figure 12.59 Offset Frequency Operation

■ d7-01: Offset Frq 1

No. (Hex.)	Name	Description	Default (Range)
d7-01 (02B2) RUN	Offset Frq 1	V/f OLV **OLV/PM** AOLV/PM EZOLV Uses *H1-xx = 0E [MFDI Function Select = Offset Frq 1]* as a percentage of the Maximum Output Frequency to add or subtract the set frequency to/from the frequency reference.	0.0% (-100.0 - +100.0%)

■ d7-02: Offset Frq 2

No. (Hex.)	Name	Description	Default (Range)
d7-02 (02B3) RUN	Offset Frq 2	V/f OLV **OLV/PM** AOLV/PM EZOLV Uses *H1-xx = 0F [MFDI Function Select = Offset Frq 2]* as a percentage of the Maximum Output Frequency to add or subtract the set frequency to/from the frequency reference.	0.0% (-100.0 - +100.0%)

■ d7-03: Offset Frq 3

No. (Hex.)	Name	Description	Default (Range)
d7-03 (02B4) RUN	Offset Frq 3	V/f OLV **OLV/PM** AOLV/PM EZOLV Uses *H1-xx = 10 [MFDI Function Select = Offset Frq 3]* as a percentage of the Maximum Output Frequency to add or subtract the set frequency to/from the frequency reference.	0.0% (-100.0 - +100.0%)

12.5 E: MOTOR

E parameters cover drive input voltage, V/f pattern, and motor parameters.

◆ E1: V/F PARAMETER MOTOR 1

E1 parameters are used to set the drive input voltage and motor V/f characteristics. To switch drive operation from one motor to another motor, set the V/f characteristics for motor 1.

■ V/f Pattern Settings

The drive uses a V/f pattern to adjust the output voltage relative to the frequency reference.

This product has been preconfigured with 15 voltage/frequency (V/f) patterns. Use *E1-03 [V/f Pattern Selection]* to select the V/f pattern that is appropriate for the application.

Additionally, one custom V/f pattern is available. Set *E1-03 = F [Custom]* and then manually set parameters *E1-04 to E1-10*.

Table 12.28 Predefined V/f Patterns

Setting Value	Specification	Characteristic	Application
0	CT_50-50Hzmax	Constant torque	For general purpose applications. This pattern is used when the load torque is constant without any rotation speed such as that used for linear conveyor systems.
1	CT_60-60Hzmax		
2	CT_50-60Hzmax		
3	CT_60-72Hzmax		
4	VT_50-35HzmidV	Derated Torque Characteristics	This pattern is used for torque loads proportional to 2 or 3 times the rotation speed, such as is the case with fans and pumps.
5	VT_50-50HzmidV		
6	VT_60-35HzmidV		
7	VT_60-50HzmidV		
8	HT_50Hz_125 V	High starting torque	This pattern is used when strong torque is required during startup.
9	HTrq50Hz-165 V		
A	HTrq60Hz-125V		
B	HT_60Hz-165V		
C	HF_60-90Hzmax	Constant output	This pattern is used to rotate motors at greater than 60 Hz. Output voltage is constant when operating at greater than 60 Hz.
D	HF_60-120Hzmax		
E	HF_60-180Hzmax		
F	Custom	Constant torque	Enables a custom V/f pattern by changing *E1-04 to E1-13 [V/f Pattern for Motor 1]*. The default settings for *E1-04 to E1-13* are the same as *Setting Value 1 [CT_60-60Hzmax]*.

Note:

Be aware of the following points when manually setting V/f patterns.

- To set linear V/f characteristics at frequencies lower than *E1-06 [Base Frequency]*, set *E1-07 = E1-09 [Mid A Frequency = Min Output Frequency]*. In this application, the drive ignores *E1-08 [Mid A Voltage]*.
- Set the five frequencies as specified by these rules: Incorrect settings will cause *oPE10 [V/f Data Setting Error]*.
  E1-09 ≤ E1-07 < E1-06 ≤ E1-11 ≤ E1-04 [Min Output Frequency ≤ Mid A Frequency < Base Frequency ≤ Mid B Frequency ≤ Max Output Frequency]
- Setting *E1-11 = 0 [Mid B Frequency = 0 Hz]* disables *E1-12 [Min Output Voltage]*. Ensure that the four frequencies are set according to the following rules;
  E1-09 ≤ E1-07 < E1-06 ≤ E1-04
- When you use *A1-03 [Init Parameters]* to initialize the drive, it will not reset *E1-03*.

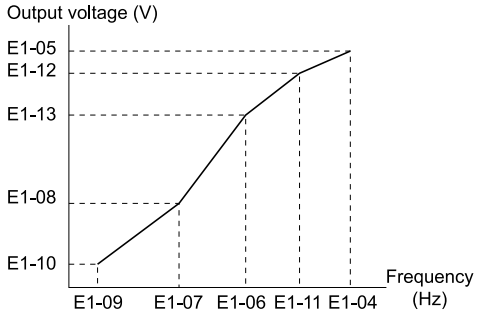

Figure 12.60 V/f Pattern

■ E1-01: Input AC Supply Voltage

No. (Hex.)	Name	Description	Default (Range)
E1-01 (0300)	Input AC Supply Voltage	V/f OLV OLV/PM AOLV/PM EZOLV Sets the drive input voltage.	200 V Class: 230 V, 400 V: 400 V (200 V Class: 155 to 255 V, 400 V Class: 310 to 510 V)

NOTICE: *Set parameter E1-01 to align with the drive input voltage (not motor voltage). If this parameter is incorrect, the protective functions of the drive will not operate correctly and it can cause damage to the drive.*

Values Related to the Drive Input Voltage

The value set in *E1-01* is the base value that the drive uses for the motor protective functions in Table 12.29. With a 400 V class drive, the detection level changes for some motor protective functions.

Table 12.29 Values Related to the Drive Input Voltage

Voltage	E1-01 Setting	Approximate Values				
		ov Detection Level	BTR Operation Level (rr Detection Level) *1	L2-05 [E1-01: UV Detection Lvl (Uv1)]	L2-11 [KEB DC Volt Setpoint]	L3-17 [DCBus Regul. Level]
200 V class	All settings	410 V	394 V	190 V	260 V	375 V
400 V class	Setting value ≥ 400 V	820 V	788 V	380 V	500 V	750 V
	Setting value < 400 V	820 V	788 V	350 V	460 V	750 V

*1 This is the protection function enabled in drives with built-in braking transistors. These values show the level that will trigger the built-in braking transistor. Refer to ""Braking Unit, Braking Resistor Unit Instruction Manual (TOBPC72060001)"" for more information.

■ E1-03: V/f Pattern Selection

No. (Hex.)	Name	Description	Default (Range)
E1-03 (0302)	V/f Pattern Selection	V/f OLV OLV/PM AOLV/PM EZOLV Sets the V/f pattern for the drive and motor. You can use one of the preset patterns or you can make a custom pattern.	F (Determined by A1-02)

Note:

- When *A1-02 = 2 [Control Method = OLVector]*, settings *0* to *E* are not available.
- Set the correct V/f pattern for the application and operation area. An incorrect V/f pattern can decrease motor torque and increase current from overexcitation.
- Parameter *A1-03 [Init Parameters]* will not reset the value of *E1-03*.

0 : CT_50-50Hzmax

Use this constant torque pattern for general applications. This pattern is used when the load torque is constant without any rotation speed such as that used for linear conveyor systems.

Note:

The voltage values in the figures are for 200 V class drives. Multiply the values by 2 for 400 V class drives.

HD : 2001 - 2021, B001 - B018, 4001 - 4012 ND : 2001 - 2018, B001 - B012, 4001 - 4009	HD : 2030 - 2082, 4018 - 4060 ND : 2021 - 2082, 4012 - 4060
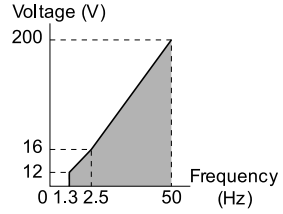	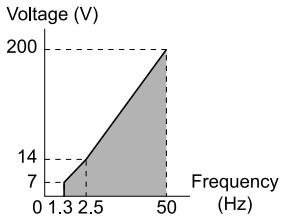

1 : CT_60-60Hzmax

Use this constant torque pattern for general applications. This pattern is used when the load torque is constant without any rotation speed such as that used for linear conveyor systems.

Note:

The voltage values in the figures are for 200 V class drives. Multiply the values by 2 for 400 V class drives.

HD : 2001 - 2021, B001 - B018, 4001 - 4012 ND : 2001 - 2018, B001 - B012, 4001 - 4009	HD : 2030 - 2082, 4018 - 4060 ND : 2021 - 2082, 4012 - 4060
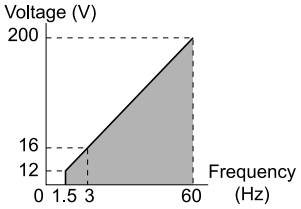	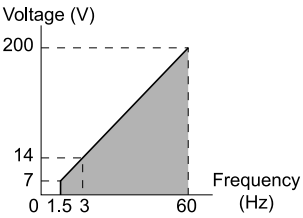

2 : CT_50-60Hzmax

Use this constant torque pattern for general applications. This pattern is used when the load torque is constant without any rotation speed such as that used for linear conveyor systems.

Note:

The voltage values in the figures are for 200 V class drives. Multiply the values by 2 for 400 V class drives.

HD : 2001 - 2021, B001 - B018, 4001 - 4012 ND : 2001 - 2018, B001 - B012, 4001 - 4009	HD : 2030 - 2082, 4018 - 4060 ND : 2021 - 2082, 4012 - 4060
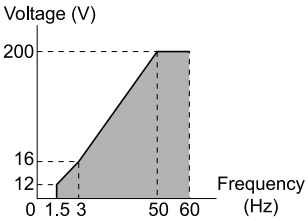	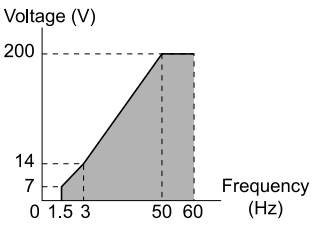

3 : CT_60-72Hzmax

Use this constant torque pattern for general applications. This pattern is used when the load torque is constant without any rotation speed such as that used for linear conveyor systems.

Note:

The voltage values in the figures are for 200 V class drives. Multiply the values by 2 for 400 V class drives.

HD : 2001 - 2021, B001 - B018, 4001 - 4012 ND : 2001 - 2018, B001 - B012, 4001 - 4009	HD : 2030 - 2082, 4018 - 4060 ND : 2021 - 2082, 4012 - 4060
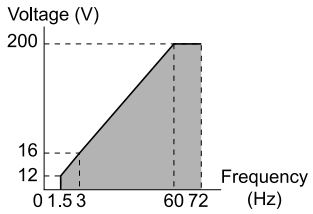	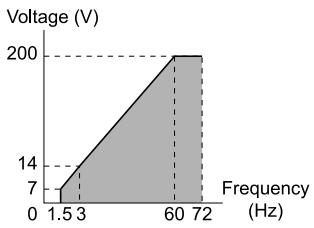

4 : VT_50-35HzmidV

Use this derated torque pattern for torque loads proportional to three times the rotation speed. For example, fans and pumps.

Note:

The voltage values in the figures are for 200 V class drives. Multiply the values by 2 for 400 V class drives.

HD : 2001 - 2021, B001 - B018, 4001 - 4012 ND : 2001 - 2018, B001 - B012, 4001 - 4009	HD : 2030 - 2082, 4018 - 4060 ND : 2021 - 2082, 4012 - 4060
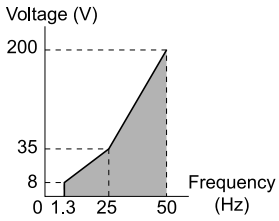	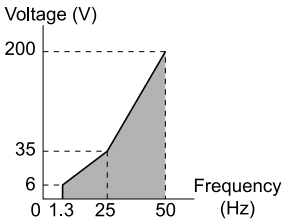

5 : VT_50-50HzmidV

Use this derated torque pattern for torque loads proportional to two times the rotation speed. For example, fans and pumps.

Note:

The voltage values in the figures are for 200 V class drives. Multiply the values by 2 for 400 V class drives.

HD : 2001 - 2021, B001 - B018, 4001 - 4012 ND : 2001 - 2018, B001 - B012, 4001 - 4009	HD : 2030 - 2082, 4018 - 4060 ND : 2021 - 2082, 4012 - 4060
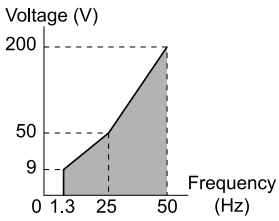	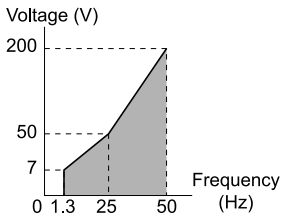

6 : VT_60-35HzmidV

Use this derated torque pattern for torque loads proportional to three times the rotation speed. For example, fans and pumps.

Note:

The voltage values in the figures are for 200 V class drives. Multiply the values by 2 for 400 V class drives.

HD : 2001 - 2021, B001 - B018, 4001 - 4012 ND : 2001 - 2018, B001 - B012, 4001 - 4009	HD : 2030 - 2082, 4018 - 4060 ND : 2021 - 2082, 4012 - 4060
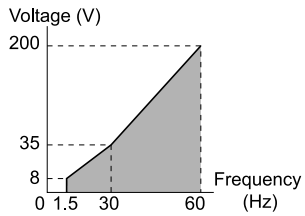	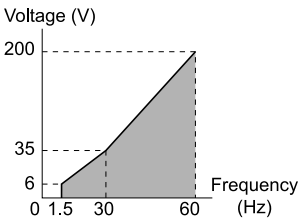

7 : VT_60-50HzmidV

Use this derated torque pattern for torque loads proportional to two times the rotation speed. For example, fans and pumps.

Note:

The voltage values in the figures are for 200 V class drives. Multiply the values by 2 for 400 V class drives.

HD : 2001 - 2021, B001 - B018, 4001 - 4012 ND : 2001 - 2018, B001 - B012, 4001 - 4009	HD : 2030 - 2082, 4018 - 4060 ND : 2021 - 2082, 4012 - 4060
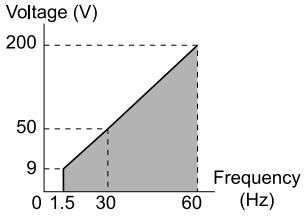	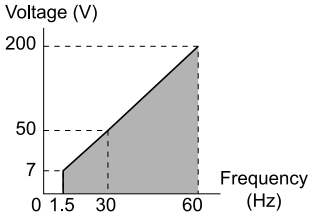

8 : HT_50Hz_125 V

Use this pattern when moderate torque is necessary during start up.

Select this pattern only in these conditions:

- The wiring distance between the drive and motor is 150 m (492.1 ft) minimum
- There is an AC reactor connected to the drive output.

Note:

The voltage values in the figures are for 200 V class drives. Multiply the values by 2 for 400 V class drives.

HD : 2001 - 2021, B001 - B018, 4001 - 4012 ND : 2001 - 2018, B001 - B012, 4001 - 4009	HD : 2030 - 2082, 4018 - 4060 ND : 2021 - 2082, 4012 - 4060
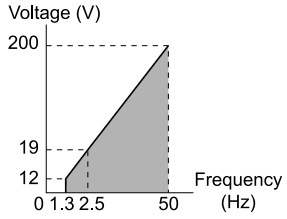	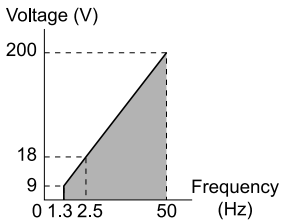

9 : HTrq50Hz-165 V

Use this pattern when high torque is necessary during start up.

Select this pattern only in these conditions:

- The wiring distance between the drive and motor is 150 m (492.1 ft) minimum
- There is an AC reactor connected to the drive output.

Note:

The voltage values in the figures are for 200 V class drives. Multiply the values by 2 for 400 V class drives.

HD : 2004 - 2021, 4002 - 4012 ND : 2004 - 2018, 4002 - 4009	HD : 2030 - 2211, 4018 - 4103 ND : 2021 - 2169, 4012 - 4089
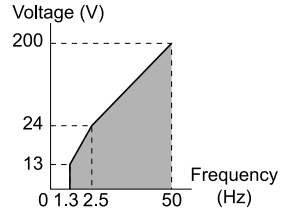	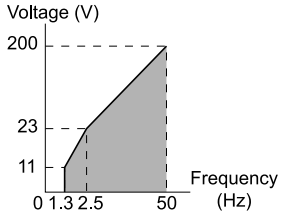

A : HTrq60Hz-125V

Use this pattern when moderate torque is necessary during start up.

Select this pattern only in these conditions:

- The wiring distance between the drive and motor is 150 m (492.1 ft) minimum
- There is an AC reactor connected to the drive output.

Note:
The voltage values in the figures are for 200 V class drives. Multiply the values by 2 for 400 V class drives.

HD : 2001 - 2021, B001 - B018, 4001 - 4012 ND : 2001 - 2018, B001 - B012, 4001 - 4009	HD : 2030 - 2082, 4018 - 4060 ND : 2021 - 2082, 4012 - 4060
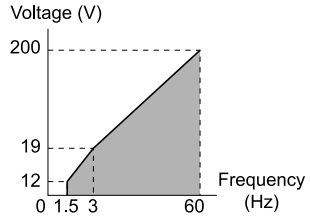	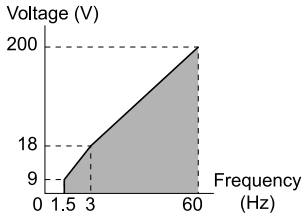

B : HT_60Hz-165V

Use this pattern when high torque is necessary during start up.

Select this pattern only in these conditions:

- The wiring distance between the drive and motor is 150 m (492.1 ft) minimum
- There is an AC reactor connected to the drive output.

Note:
The voltage values in the figures are for 200 V class drives. Multiply the values by 2 for 400 V class drives.

HD : 2001 - 2021, B001 - B018, 4001 - 4012 ND : 2001 - 2018, B001 - B012, 4001 - 4009	HD : 2030 - 2082, 4018 - 4060 ND : 2021 - 2082, 4012 - 4060
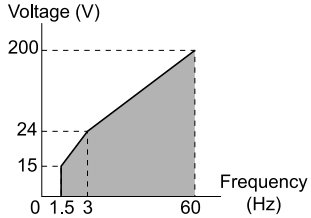	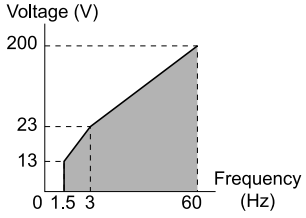

C : HF_60-90Hzmax

Use this constant output pattern to rotate motors at more than 60 Hz. Output voltage is constant when you operate at more than 60 Hz.

Note:
The voltage values in the figures are for 200 V class drives. Multiply the values by 2 for 400 V class drives.

HD : 2001 - 2021, B001 - B018, 4001 - 4012 ND : 2001 - 2018, B001 - B012, 4001 - 4009	HD : 2030 - 2082, 4018 - 4060 ND : 2021 - 2082, 4012 - 4060
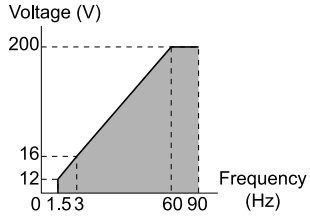	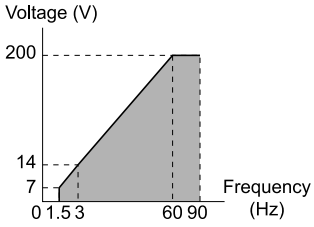

D : HF_60-120Hzmax

Use this constant output pattern to rotate motors at more than 60 Hz. Output voltage is constant when you operate at more than 60 Hz.

Note:
The voltage values in the figures are for 200 V class drives. Multiply the values by 2 for 400 V class drives.

HD : 2001 - 2021, B001 - B018, 4001 - 4012 ND : 2001 - 2018, B001 - B012, 4001 - 4009	HD : 2030 - 2082, 4018 - 4060 ND : 2021 - 2082, 4012 - 4060
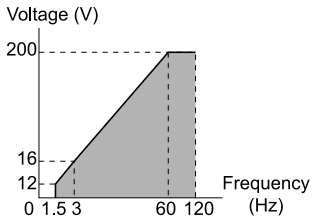	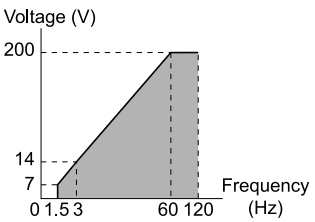

E : HF_60-180Hzmax

Use this constant output pattern to rotate motors at more than 60 Hz. Output voltage is constant when you operate at more than 60 Hz.

Note:

The voltage values in the figures are for 200 V class drives. Multiply the values by 2 for 400 V class drives.

HD : 2001 - 2021, B001 - B018, 4001 - 4012 ND : 2001 - 2018, B001 - B012, 4001 - 4009	HD : 2030 - 2082, 4018 - 4060 ND : 2021 - 2082, 4012 - 4060
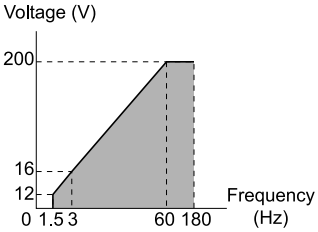	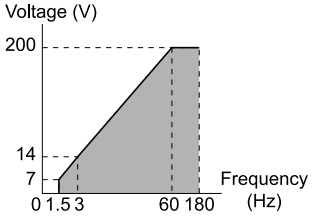

F : Custom

Set *E1-04* to *E1-13 [V/f Pattern for Motor 1]* to set the values for this custom pattern.

The default settings are the same as *Setting Value 0 [CT_50-50Hzmax]*.

■ E1-04: Max Output Frequency

No. (Hex.)	Name	Description	Default (Range)
E1-04 (0303)	Max Output Frequency	V/f OLV OLV/PM AOLV/PM EZOLV Sets the maximum output frequency for the V/f pattern.	Determined by A1-02 and E5-01 (Determined by A1-02 and E5-01)

■ E1-05: Max Output Voltage

No. (Hex.)	Name	Description	Default (Range)
E1-05 (0304)	Max Output Voltage	V/f OLV OLV/PM AOLV/PM EZOLV Sets the maximum output voltage for the V/f pattern.	200.0 (200 V Class: 0.0 - 255.0 V, 400 V Class: 0.0 - 510.0 V)

■ E1-06: Base Frequency

No. (Hex.)	Name	Description	Default (Range)
E1-06 (0305)	Base Frequency	V/f OLV OLV/PM AOLV/PM EZOLV Sets the base frequency for the V/f pattern.	Determined by A1-02 and E5-01 (0.0 - E1-04)

■ E1-07: Mid A Frequency

No. (Hex.)	Name	Description	Default (Range)
E1-07 (0306)	Mid A Frequency	V/f OLV OLV/PM AOLV/PM EZOLV Sets a middle output frequency for the V/f pattern.	Determined by A1-02 (0.0 - E1-04)

■ E1-08: Mid A Voltage

No. (Hex.)	Name	Description	Default (Range)
E1-08 (0307)	Mid A Voltage	V/f OLV OLV/PM AOLV/PM EZOLV Sets a middle output voltage for the V/f pattern.	Determined by A1-02 , C6-01 and o2-04 (200 V Class: 0.0 - 255.0 V, 400 V Class: 0.0 - 510.0 V)

Note:

Default setting is determined by *A1-02 [Control Method]*, *C6-01 [ND/HD Duty Selection]*, and *o2-04 [Drive KVA Selection]*.

■ E1-09: Min Output Frequency

No. (Hex.)	Name	Description	Default (Range)
E1-09 (0308)	Min Output Frequency	V/f OLV OLV/PM AOLV/PM EZOLV Sets the minimum output frequency for the V/f pattern.	Determined by A1-02 and E5-01 (Determined by A1-02, E1-04, and E5-01)

■ E1-10: Min Output Voltage

No. (Hex.)	Name	Description	Default (Range)
E1-10 (0309)	Min Output Voltage	V/f OLV OLV/PM AOLV/PM EZOLV Sets the minimum output voltage for the V/f pattern.	Determined by A1-02 (200 V Class: 0.0 to 255.0 V, 400 V Class: 0.0 to 510.0 V)

■ E1-11: Mid B Frequency

No. (Hex.)	Name	Description	Default (Range)
E1-11 (030A) Expert	Mid B Frequency	V/f OLV OLV/PM AOLV/PM EZOLV Sets a middle output frequency for the V/f pattern.	0.0 Hz (0.0 - E1-04)

Note:

Set this parameter to *0.0* to disable the function.

■ E1-12: Min Output Voltage

No. (Hex.)	Name	Description	Default (Range)
E1-12 (030B) Expert	Min Output Voltage	V/f OLV OLV/PM AOLV/PM EZOLV Sets a middle point voltage for the V/f pattern.	0.0 V (200 V Class: 0.0 to 255.0 V, 400 V Class: 0.0 to 510.0 V)

Note:

Set this parameter to *0.0* to disable the function.

■ E1-13: Base Voltage

No. (Hex.)	Name	Description	Default (Range)
E1-13 (030C) Expert	Base Voltage	V/f OLV OLV/PM AOLV/PM EZOLV Sets the base voltage for the V/f pattern.	0.0 V (200 V Class: 0.0 - 255.0 V,400 V Class: 0.0 - 510.0 V)

Note:

- After Auto-Tuning, the value of *E1-13 = E1-05 [Max Output Voltage]*.
- When *E1-13 = 0.0*, use the value of *E1-05* to control the voltage.

◆ E2: MOTOR 1 PARAMETERS

E2 parameters are used to set induction motor data. To switch drive operation from one motor to another motor, configure the first motor (motor 1).

If Auto-Tuning cannot be performed, set the *E2 parameters* manually. Performing Auto-Tuning automatically sets the *E2 parameters* to the optimal values.

Note:

If *A1-02 [Control Method]* is set to the following control modes, the keypad does not display *E2-xx*.

- 5 [PM OLVector]
- 6 [PM AOLVector]
- 8 [EZ Vector]

■ E2-01: Mot Rated Current (FLA)

No. (Hex.)	Name	Description	Default (Range)
E2-01 (030E)	Mot Rated Current (FLA)	V/f OLV OLV/PM AOLV/PM EZOLV Sets the motor rated current in amps.	Determined by o2-04, C6-01 (10% to 200% of the drive rated current)

Note:

- If *E2-01 < E2-03 [Mot No-Load Current]*, the drive will detect *oPE02 [Parameter Range Setting Error]*.
- When the drive model changes, the display units for this parameter also change.
  - 0.01 A: 2001 to 2042, B001 to B018, 4001 to 4023
  - 0.1 A: 2056 to 2082, 4031 to 4060

The value set for *E2-01* becomes the reference value for motor protection and the torque limit. Enter the motor rated current written on the motor nameplate. Auto-Tuning the drive will automatically set *E2-01* to the value input for *T1-04 [Motor Rated Current]*.

■ E2-02: Mot Rated Slip

No. (Hex.)	Name	Description	Default (Range)
E2-02 (030F)	Mot Rated Slip	V/f OLV OLV/PM AOLV/PM EZOLV Sets motor rated slip.	Determined by o2-04, C6-01 (0.000 - 20.000 Hz)

This parameter value becomes the base slip compensation value. The drive automatically sets this parameter during Auto-Tuning. When you cannot do Auto-Tuning, calculate the motor rated slip with the information on the motor nameplate and this formula:

$E2\text{-}02 = f - (n \times p) / 120$

- f: Motor rated frequency (Hz)
- n: Rated motor speed (min^{-1} (r/min))
- p: Number of motor poles

■ E2-03: Mot No-Load Current

No. (Hex.)	Name	Description	Default (Range)
E2-03 (0310)	Mot No-Load Current	V/f OLV OLV/PM AOLV/PM EZOLV Sets the no-load current for the motor in amps when operating at the rated frequency and the no-load voltage.	Determined by o2-04, C6-01 (0 to E2-01)

Note:

When the drive model changes, the display units for this parameter also change.

- 0.01 A: 2001 to 2042, B001 to B018, 4001 to 4023
- 0.1 A: 2056 to 2082, 4031 to 4060

The drive automatically sets this parameter during Auto-Tuning. When you cannot do Auto-Tuning, you can also use the motor no-load current on the motor test report to enter this value manually. Get the test report from the motor manufacturer.

Note:

The default setting of the no-load current is for a 4-pole motor recommended by the manufacturer.

■ E2-04: Motor Pole Count

No. (Hex.)	Name	Description	Default (Range)
E2-04 (0311)	Motor Pole Count	V/f OLV OLV/PM AOLV/PM EZOLV Sets the number of motor poles.	4 (2 - 120)

Note:
- When *A1-02 = 0 [Control Method = V/f Control]*, the maximum value is 120.
- When *A1-02 = 2 [OLVector]*, the maximum value is 48.

Auto-Tuning automatically sets this parameter to the value of [Number of Motor Poles].

■ E2-05: Motor L-L Resistance

No. (Hex.)	Name	Description	Default (Range)
E2-05 (0312)	Motor L-L Resistance	V/f OLV OLV/PM AOLV/PM EZOLV Sets the line-to-line resistance for the motor stator windings.	Determined by o2-04, C6-01 (0.000 - 65.000 Ω)

Note:

This value is the motor line-to-line resistance. Do not set this parameter with the single-phase resistance.

Auto-Tuning automatically sets this parameter. If you cannot do Auto-Tuning, use the test report from the motor manufacturer to configure the settings. You can calculate the motor line-to-line resistance with one of these formulas:

- E-type insulation: [the resistance value (Ω) shown on the test report at 75 °C] × 0.92
- B-type insulation: [the resistance value (Ω) shown on the test report at 75 °C] × 0.92
- F-type insulation: [the resistance value (Ω) shown on the test report at 115 °C] × 0.87

■ E2-06: Motor Leak Inductance

No. (Hex.)	Name	Description	Default (Range)
E2-06 (0313)	Motor Leak Inductance	V/f OLV OLV/PM AOLV/PM EZOLV Sets the voltage drop from motor leakage inductance when the motor is operating at the rated frequency and rated current. This value is a percentage of Motor Rated Voltage.	Determined by o2-04, C6-01 (0.0 - 60.0%)

The drive automatically sets this parameter during Auto-Tuning.

Note:

The motor nameplate does not usually show the quantity of voltage drop. If you do not know the value of the motor leakage inductance, contact the motor manufacturer to receive a copy of the motor test report.

■ E2-07: Mot Sat Coeff 1

No. (Hex.)	Name	Description	Default (Range)
E2-07 (0314)	Mot Sat Coeff 1	V/f OLV OLV/PM AOLV/PM EZOLV Sets the motor iron-core saturation coefficient at 50% of the magnetic flux.	0.50 (0.00 - 0.50)

The drive uses this coefficient when it operates with constant output. The drive uses this coefficient when it operates the motor in the constant output range.

■ E2-08: Mot Sat Coeff 2

No. (Hex.)	Name	Description	Default (Range)
E2-08 (0315)	Mot Sat Coeff 2	V/f OLV OLV/PM AOLV/PM EZOLV Sets the motor iron-core saturation coefficient at 75% of the magnetic flux.	0.75 (E2-07 - 0.75)

The drive uses this coefficient when it operates with constant output. The drive uses this coefficient when it operates the motor in the constant output range.

■ E2-09: Motor Mech Loss

No. (Hex.)	Name	Description	Default (Range)
E2-09 (0316) Expert	Motor Mech Loss	V/f OLV OLV/PM AOLV/PM EZOLV Sets the mechanical loss of the motor. It is set as a percentage of *E2-11 [Motor Rated Power (kW)]*. Usually it is not necessary to change this setting.	0.0% (0.0 - 10.0%)

Adjust this parameter in these conditions. The drive adds the configured mechanical loss to the torque reference value as a torque compensation value:

- There is a large quantity of torque loss from motor bearing friction.
- There is a large quantity of torque loss in fans and pumps.

■ E2-10: Motor Iron Loss

No. (Hex.)	Name	Description	Default (Range)
E2-10 (0317)	Motor Iron Loss	V/f OLV OLV/PM AOLV/PM EZOLV Sets the motor iron loss.	Determined by o2-04, C6-01 (0 - 65535 W)

■ E2-11: Motor Rated Power (kW)

No. (Hex.)	Name	Description	Default (Range)
E2-11 (0318)	Motor Rated Power (kW)	V/f OLV OLV/PM AOLV/PM EZOLV Sets the motor rated output in the units from *o1-58 [Mot Capacity Unit]*.	Determined by o2-04, C6-01 (0.00 - 650.00 kW)

The drive automatically sets this parameter to the value input for "Motor Rated Power" during Auto-Tuning.

◆ E3: V/F PARAMETER MOTOR 2

E3 parameters set the control mode and V/f pattern used for motor 2.

Note:

V/f preset patterns equivalent to those set with *E1-03 [V/f Pattern Selection]* are not available for *E3 parameters*. Use *E3-04 [M2 Max Out Frequency]* to *E3-10 [M2 Min Out Voltage]* to manually set the V/f pattern.

■ Notes on Manually Setting V/f Patterns

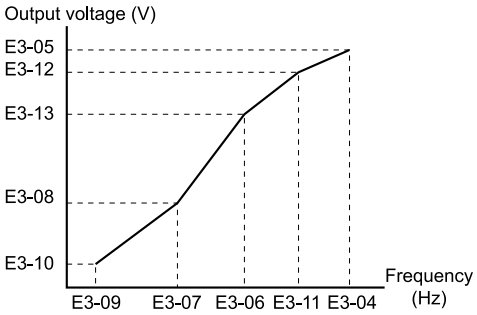

Figure 12.61 Motor 2 V/f Pattern Diagram

- To configure a linear V/f pattern at frequencies lower than *E3-06 [M2 Base Frequency]*, set *E3-07 = E3-09 [M2 Mid A Frequency = M2 Min Out Frequency]*. In this application, the drive ignores *E1-08 [M2 Mid A Voltage]*.
- Set the five frequencies as specified by these rules:
  E3-09 ≤ E3-07 < E3-06 ≤ E3-11 ≤ E3-04 [M2 Min Out Frequency ≤ M2 Mid A Frequency < M2 Base Frequency ≤ M2 Mid B Frequency ≤ M2 Max Out Frequency]
  Incorrect settings will trigger *oPE10 [V/f Data Setting Error]*.
- If *E3-11 = 0.0 Hz*, the drive will ignore the V/f pattern settings.
- When you use *A1-03 [Init Parameters]* to initialize the drive, the drive will reset the manually set values for *E3-04 to E3-13 [M2 Base Voltage]* to default values.

■ E3-01: M2 Control Method Selection

No. (Hex.)	Name	Description	Default (Range)
E3-01 (0319)	M2 Control Method Selection	V/f OLV OLV/PM AOLV/PM EZOLV Sets the control method for motor 2.	0 (0, 2)

Note:
- When you change this setting, the drive will set all parameters that are dependent on *E3-01* to their default settings.
- Parameter *L1-01 [Motor Cool Type for OL1 Calc]* sets the protection operation of *oL1 [Motor Overload]* the same as Motor 1.
- When you use parameter *A1-03 [Init Parameters]* to initialize the drive, this parameter is not reset.

0 : V/f Control

2 : OLVector

■ E3-04: M2 Max Out Frequency

No. (Hex.)	Name	Description	Default (Range)
E3-04 (031A)	M2 Max Out Frequency	V/f OLV OLV/PM AOLV/PM EZOLV Set the maximum output frequency for the motor 2 V/f pattern.	Determined by E3-01 (40.0 - 590.0 Hz)

■ E3-05: M2 Max Out Voltage

No. (Hex.)	Name	Description	Default (Range)
E3-05 (031B)	M2 Max Out Voltage	V/f OLV OLV/PM AOLV/PM EZOLV Sets the maximum output voltage for the motor 2 V/f pattern.	Determined by E3-01 (200 V Class: 0.0 - 255.0 V, 400 V Class: 0.0 - 510.0 V)

■ E3-06: M2 Base Frequency

No. (Hex.)	Name	Description	Default (Range)
E3-06 (031C)	M2 Base Frequency	V/f OLV OLV/PM AOLV/PM EZOLV Sets the base frequency for the motor 2 V/f pattern.	Determined by E3-01 (0.0 - E3-04)

■ E3-07: M2 Mid A Frequency

No. (Hex.)	Name	Description	Default (Range)
E3-07 (031D)	M2 Mid A Frequency	V/f OLV OLV/PM AOLV/PM EZOLV Sets a middle output frequency for the motor 2 V/f pattern.	Determined by E3-01 (0.0 - E3-04)

■ E3-08: M2 Mid A Voltage

No. (Hex.)	Name	Description	Default (Range)
E3-08 (031E)	M2 Mid A Voltage	V/f OLV OLV/PM AOLV/PM EZOLV Sets a middle output voltage for the motor 2 V/f pattern.	Determined by E3-01 (200 V Class: 0.0 - 255.0 V, 400 V Class: 0.0 - 510.0 V)

■ E3-09: M2 Min Out Frequency

No. (Hex.)	Name	Description	Default (Range)
E3-09 (031F)	M2 Min Out Frequency	V/f OLV OLV/PM AOLV/PM EZOLV Sets the minimum output frequency for the motor 2 V/f pattern.	Determined by E3-01 (0.0 - E3-04)

■ E3-10: M2 Min Out Voltage

No. (Hex.)	Name	Description	Default (Range)
E3-10 (0320)	M2 Min Out Voltage	V/f OLV OLV/PM AOLV/PM EZOLV Sets the minimum output voltage for the motor 2 V/f pattern.	Determined by E3-01 (200 V Class: 0.0 - 255.0 V, 400 V Class: 0.0 - 510.0 V)

■ E3-11: M2 Mid B Frequency

No. (Hex.)	Name	Description	Default (Range)
E3-11 (0345) Expert	M2 Mid B Frequency	V/f OLV OLV/PM AOLV/PM EZOLV Sets a middle output frequency for the motor 2 V/f pattern. Set this parameter to adjust the V/f pattern for the constant output range. Usually it is not necessary to change this parameter.	0.0 Hz (0.0 - E3-04)

Note:
- Set this parameter to *0.0* to disable the function.
- When you initialize the drive, this parameter is reset to the default value.

■ E3-12: M2 Min Out Voltage

No. (Hex.)	Name	Description	Default (Range)
E3-12 (0346) Expert	M2 Min Out Voltage	V/f OLV OLV/PM AOLV/PM EZOLV Sets a middle output voltage for the motor 2 V/f pattern. Set this parameter to adjust the V/f pattern for the constant output range. Usually it is not necessary to change this parameter.	0.0 V (200 V Class: 0.0 to 255.0 V, 400 V Class: 0.0 to 510.0 V)

Note:
- Set this parameter to *0.0* to disable the function.
- When you initialize the drive, this parameter is reset to the default value.
- The setting value changes automatically when you do Auto-Tuning (rotational and stationary 1 or 2).

■ E3-13: M2 Base Voltage

No. (Hex.)	Name	Description	Default (Range)
E3-13 (0347) Expert	M2 Base Voltage	V/f OLV OLV/PM AOLV/PM EZOLV Sets the base voltage for the motor 2 V/f pattern. Set this parameter to adjust the V/f pattern for the constant output range. Usually it is not necessary to change this parameter.	0.0 V (200 V Class: 0.0 to 255.0 V, 400 V Class: 0.0 to 510.0 V)

Note:
- When you initialize the drive, this parameter is reset to the default value.
- The setting value changes automatically when you do Auto-Tuning (rotational and stationary 1 or 2).

◆ E4: MOTOR 2 PARAMETERS

E4 parameters set induction motor data. To switch drive operation from one motor to a different motor, configure motor 2.

Auto-Tuning automatically sets the *E4 parameters* to the best values for the application. If you cannot do Auto-Tuning, set the *E4 parameters* manually.

Note:

E3-xx and *E4-xx* are available when *H1-xx = 61 [MFDI Function Select = Motor 2 Select]*.

■ E4-01: M2 Rated Current (FLA)

No. (Hex.)	Name	Description	Default (Range)
E4-01 (0321)	M2 Rated Current (FLA)	V/f OLV OLV/PM AOLV/PM EZOLV Sets the motor rated current for motor 2 in amps.	Determined by o2-04, C6-01 (10% to 200% of the drive rated current)

Note:
- If *E4-01 ≤ E4-03 [M2 No-Load Current]*, the drive will detect *oPE02 [Parameter Range Setting Error]*.
- When the drive model changes, the display units for this parameter also change.
  – 0.01 A: 2001 to 2042, B001 to B018, 4001 to 4023
  – 0.1 A: 2056 to 2082, 4031 to 4060

The value set for *E4-01* becomes the reference value for motor protection, the torque limit, and torque control. Enter the motor rated current written on the motor nameplate. Auto-Tuning automatically sets the value of *E4-01* to the value input for [Motor Rated Current].

■ E4-02: M2 Rated Slip

No. (Hex.)	Name	Description	Default (Range)
E4-02 (0322)	M2 Rated Slip	V/f OLV OLV/PM AOLV/PM EZOLV Sets the motor rated slip for motor 2.	Determined by o2-04, C6-01 (0.000 - 20.000 Hz)

The value set in *E4-02* becomes the base slip compensation value. The drive sets this parameter during Rotational Auto-Tuning and Stationary Auto-Tuning. If you cannot do Auto-Tuning, use the information written on the motor nameplate and this formula to calculate the motor rated slip:

E4-02 = f - (n × p) / 120

- f: Motor rated frequency (Hz)
- n: Rated motor speed (min^{-1} (r/min))
- p: Number of motor poles

■ E4-03: M2 No-Load Current

No. (Hex.)	Name	Description	Default (Range)
E4-03 (0323)	M2 No-Load Current	V/f OLV OLV/PM AOLV/PM EZOLV Sets the no-load current for motor 2 in amps when operating at the rated frequency and the no-load voltage.	Determined by o2-04, C6-01 (0 to E4-01)

Note:

When the drive model changes, the display units for this parameter also change.
- 0.01 A: 2001 to 2042, B001 to B018, 4001 to 4023
- 0.1 A: 2056 to 2082, 4031 to 4060

You can also manually enter the motor no-load current shown on the motor test report to *E4-03*. Contact the motor manufacturer for the motor test report.

Note:

The default setting of the no-load current is for a 4-pole motor recommended by the manufacturer.

■ E4-04: M2 Pole Count

No. (Hex.)	Name	Description	Default (Range)
E4-04 (0324)	M2 Pole Count	V/f OLV OLV/PM AOLV/PM EZOLV Sets the number of poles for motor 2.	4 (2 - 120)

Auto-Tuning automatically sets *E4-04* to the value input for [Number of Motor Poles].

■ E4-05: M2 L-L Resistance

No. (Hex.)	Name	Description	Default (Range)
E4-05 (0325)	M2 L-L Resistance	V/f OLV OLV/PM AOLV/PM EZOLV Sets the line-to-line resistance for the motor 2 stator windings.	Determined by o2-04, C6-01 (0.000 - 65.000 Ω)

Note:

This value is the line-to-line resistance for motor 2. Do not use the single-phase resistance to set this parameter.

The drive automatically calculates this value when Auto-Tuning completes successfully. If you cannot do Auto-Tuning, get the test report from the motor manufacturer. To calculate the motor line-to-line resistance, use the information shown on the motor nameplate with one of these formulas:

- E-type insulation: the resistance value (Ω) shown on the test report at 75 °C × 0.92
- B-type insulation: the resistance value (Ω) shown on the test report at 75 °C × 0.92
- F-type insulation: the resistance value (Ω) shown on the test report at 115 °C × 0.87

■ E4-06: M2 Leak Inductance

No. (Hex.)	Name	Description	Default (Range)
E4-06 (0326)	M2 Leak Inductance	V/f OLV OLV/PM AOLV/PM EZOLV Sets the voltage drop from motor 2 leakage inductance as a percentage of Motor Rated Voltage when motor 2 operates at the rated frequency and rated current.	Determined by o2-04, C6-01 (0.0 - 60.0%)

The drive sets this parameter during Rotational Auto-Tuning and Stationary Auto-Tuning.

Note:

You cannot usually find the quantity of voltage drop on the motor nameplate. If you do not know the value of the motor 2 leakage inductance, get the test report from the motor manufacturer.

■ E4-07: M2 Satur Coeff 1

No. (Hex.)	Name	Description	Default (Range)
E4-07 (0343)	M2 Satur Coeff 1	V/f OLV OLV/PM AOLV/PM EZOLV Sets the motor 2 iron-core saturation coefficient at 50% of the magnetic flux.	0.50 (0.00 - 0.50)

The drive sets this parameter during Rotational Auto-Tuning. The drive uses this value when it operates the motor in the constant output range.

■ E4-08: M2 Satur Coeff 2

No. (Hex.)	Name	Description	Default (Range)
E4-08 (0344)	M2 Satur Coeff 2	V/f OLV OLV/PM AOLV/PM EZOLV Sets the motor 2 iron-core saturation coefficient at 75% of the magnetic flux.	0.75 (E4-07 - 0.75)

The drive sets this parameter during Rotational Auto-Tuning. The drive uses this value when it operates the motor in the constant output range.

■ E4-09: M2 Mech Loss

No. (Hex.)	Name	Description	Default (Range)
E4-09 (033F) Expert	M2 Mech Loss	V/f OLV OLV/PM AOLV/PM EZOLV Sets the mechanical loss of motor 2. It is set as a percentage of *E4-11 [M2 Rated Power (kW)]*. Usually it is not necessary to change this setting.	0.0% (0.0 - 10.0%)

Adjust this parameter in these conditions. The drive adds the configured mechanical loss to the torque reference value as a torque compensation value:

- There is a large quantity of torque loss from motor bearing friction.
- There is a large quantity of torque loss in fans and pumps.

■ E4-10: M2 Iron Loss

No. (Hex.)	Name	Description	Default (Range)
E4-10 (0340)	M2 Iron Loss	V/f OLV OLV/PM AOLV/PM EZOLV Sets the motor iron loss for motor 2.	Determined by o2-04, C6-01 (0 - 65535 W)

■ E4-11: M2 Rated Power (kW)

No. (Hex.)	Name	Description	Default (Range)
E4-11 (0327)	M2 Rated Power (kW)	V/f OLV OLV/PM AOLV/PM EZOLV Sets the motor rated power in the units from *o1-58 [Mot Capacity Unit]*.	Determined by o2-04, C6-01 (0.00 - 650.00 kW)

Auto-Tuning automatically sets this parameter to the value input for [Motor Rated Power].

◆ E5: PM MOTOR SETTINGS

E5 parameters are used to set PM motor data.

Set *E5-01* to the motor code when using PM motors recommended by the manufacturer. *E5* and other related motor parameters will be automatically set to the optimal values.

Perform Auto-Tuning for all other PM motors. If information from motor nameplates or test reports is available, the *E5 parameters* can be manually entered.

Note:
- The keypad shows *E5-xx* only when *A1-02 = 5, 6 [Control Method = PM OLVector, PM AOLVector]*.
- *E5-xx parameters* are not reset when the drive is initialized using parameter *A1-03 [Init Parameters]*.

■ E5-01: PM Mot Code Selection

No. (Hex.)	Name	Description	Default (Range)
E5-01 (0329)	PM Mot Code Selection	V/f OLV **OLV/PM** AOLV/PM EZOLV Sets the motor code for Yaskawa PM motors. The drive uses the motor code to automatically set some parameters to their correct settings.	FFFF (0000 - FFFF)

Note:
- If the drive hunts or shows an alarm after you enter a motor code, use the keypad to enter the value shown on the nameplate to *E5-xx*.
- When you use a PM motor other than a Yaskawa SMRA, SSR1, or SST4 series, set *E5-01 = FFFF*.

Figure 12.62 gives information about the motor code setting digits.

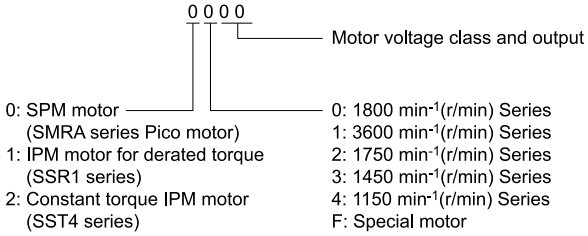

Figure 12.62 PM Motor Code

■ E5-02: PM Mot Rated Power (kW)

No. (Hex.)	Name	Description	Default (Range)
E5-02 (032A)	PM Mot Rated Power (kW)	V/f OLV **OLV/PM** AOLV/PM EZOLV Sets the PM motor rated output in the units from *o1-58 [Mot Capacity Unit]*.	Determined by o2-04, C6-01 (0.10 - 30.00 kW)

These Auto-Tuning methods will automatically set this parameter:

- PM Motor Parameter Settings
- PM Stationary Auto-Tuning
- PM Rotational Auto-Tuning

■ E5-03: PM Mot Rated Current (FLA)

No. (Hex.)	Name	Description	Default (Range)
E5-03 (032B)	PM Mot Rated Current (FLA)	V/f OLV **OLV/PM** AOLV/PM EZOLV Sets the PM motor rated current (FLA).	Determined by o2-04, C6-01 (10% to 200% of the drive rated current)

Note:

When the drive model changes, the display units for this parameter also change.
- 0.01 A: 2001 to 2042, B001 to B018, 4001 to 4023
- 0.1 A: 2056 to 2082, 4031 to 4060

The drive automatically sets *E5-03* to the value input for *T2-06 [PMMot Rated Current]* after you do these types of Auto-Tuning:

- PM Motor Parameter Settings
- PM Stationary Auto-Tuning
- PM StaTun for Stator Resistance
- PM Rotational Auto-Tuning

■ E5-04: PM Mot Pole Count

No. (Hex.)	Name	Description	Default (Range)
E5-04 (032C)	PM Mot Pole Count	V/f OLV **OLV/PM** AOLV/PM EZOLV Sets the number of PM motor poles.	4 (2 - 120)

Note:

When *A1-02 = 5, 6 or 8 [PM OLVector, PM AOLVector or EZ Vector]*, the maximum value is 48.

These types of Auto-Tuning will automatically set this parameter to the value of [Number of Motor Poles]:

- PM Motor Parameter Settings
- PM Stationary Auto-Tuning
- PM Rotational Auto-Tuning

■ E5-05: PM Mot Resistance (Ohms/Phase)

No. (Hex.)	Name	Description	Default (Range)
E5-05 (032D)	PM Mot Resistance (Ohms/ Phase)	V/f OLV **OLV/PM** AOLV/PM EZOLV Sets the resistance per phase of a PM motor. Set 50% of the line-to-line resistance.	0.100 Ω (0.000 - 65.000 Ω)

PM motor Auto-Tuning automatically sets this parameter to the value of [PM Motor Stator Resistance].

Note:

Do not change the setting calculated by Auto-Tuning unless it is necessary.

■ E5-06: PM d-Axis Inductance (mH/Phase)

No. (Hex.)	Name	Description	Default (Range)
E5-06 (032E)	PM d-Axis Inductance (mH/Phase)	V/f OLV **OLV/PM** AOLV/PM EZOLV Sets the PM motor d-axis inductance.	1.00 mH (0.00 - 300.00 mH)

PM motor Auto-Tuning automatically sets this parameter to the value of [PM Motor d-Axis Inductance].

Note:

Do not change the setting calculated by Auto-Tuning unless it is necessary.

■ E5-07: PM q-Axis Inductance (mH/Phase)

No. (Hex.)	Name	Description	Default (Range)
E5-07 (032F)	PM q-Axis Inductance (mH/Phase)	V/f OLV **OLV/PM** AOLV/PM EZOLV Sets the PM motor q-axis inductance.	1.00 mH (0.00 - 600.00 mH)

PM motor Auto-Tuning automatically sets this parameter to the value of [PM Motor q-Axis Inductance].

Note:

Do not change the setting calculated by Auto-Tuning unless it is necessary.

■ E5-09: PM BackEMF Vpeak (mV/(rad/ s))

No. (Hex.)	Name	Description	Default (Range)
E5-09 (0331)	PM BackEMF Vpeak (mV/ (rad/ s))	V/f OLV **OLV/PM** AOLV/PM EZOLV Sets the peak value of PM motor induced voltage.	0.0 mV/(rad/sec) (0.0 - 2000.0 mV/(rad/s))

Set this parameter when you use an IPM motor (SSR1-Series).

PM motor Auto-Tuning automatically sets this parameter to the value of [Back-EMF Voltage Constant (Ke)].

When *E5-01 = FFFF*, only set *E5-09* or *E5-24 [PM BackEMF L-L Vrms (mV/rpm)]* as the induced voltage constant.

Note:

When you set this parameter, also set *E5-24 = 0.0*. The drive will detect *oPE08 [Parameter Selection Error]* in these conditions:

- *E5-09 = 0.0* and *E5-24 = 0.0*
- *E5-09 ≠ 0.0* and *E5-24 ≠ 0.0*

■ E5-24: PM BackEMF L-L Vrms (mV/rpm)

No. (Hex.)	Name	Description	Default (Range)
E5-24 (0353)	PM BackEMF L-L Vrms (mV/rpm)	V/f OLV **OLV/PM** AOLV/PM EZOLV Sets the RMS value for PM motor line voltage.	200 V class: 100.0 mV/min^{-1} 400 V class: 200.0 mV/min^{-1} (0.0 - 6500.0 mV/min^{-1})

Set this parameter when you use an SPM motor (SMRD-series, SMRA-Series Pico motor).

PM motor Auto-Tuning automatically sets this parameter to the value of [Back-EMF Voltage Constant (Ke)].

When *E5-01 = FFFF*, only set *E5-09 [PM BackEMF Vpeak (mV/(rad/ s))]* or *E5-24* as the induced voltage constant.

Note:

When you set this parameter, also set *E5-09 = 0.0*. The drive will detect *oPE08 [Parameter Selection Error]* in these conditions:

- *E5-09 = 0.0* and *E5-24 = 0.0*
- *E5-09 ≠ 0.0* and *E5-24 ≠ 0.0*

■ E5-25: Polar Est Timeout

No. (Hex.)	Name	Description	Default (Range)
E5-25 (035E) Expert	Polar Est Timeout	V/f OLV **OLV/PM** AOLV/PM EZOLV Sets the function that switches polarity for initial polarity estimation. Usually it is not necessary to change this setting.	0 (0, 1)

When "Sd = 1" is shown on the motor nameplate or test report for Yaskawa motors, set this parameter to *1*.

0 : Disabled

1 : Enabled

◆ E9: SIMPLE VECTOR SETTINGS

E9 parameters are used to configure induction motors, PM motors, and SynRM motors. Configure these parameters only for derating torque applications in which a high level of responsiveness and accurate speed control are not required.

E9 parameters are automatically configured with values input by the Auto-Tuning process for motor parameter settings. *E9 parameters* can be manually configured when the EZ Tuning process cannot be performed.

■ E9-01: Motor Type Selection

No. (Hex.)	Name	Description	Default (Range)
E9-01 (11E4)	Motor Type Selection	V/f OLV OLV/PM AOLV/PM **EZOLV** Sets the type of motor.	0 (0 to 2)

EZ Tuning automatically sets this parameter to the value of [Motor Type Selection].

0 : IM

1 : PM

2 : SynRM

■ E9-02: Maximum Speed

No. (Hex.)	Name	Description	Default (Range)
E9-02 (11E5)	Maximum Speed	V/f OLV OLV/PM AOLV/PM **EZOLV** Sets the maximum speed of the motor.	Determined by E9-01 (40.0 - 120.0 Hz)

Note:

The unit of measure changes when the setting of *o1-04 [V/f Pattern Unit for Display]*.

EZ Tuning automatically sets this parameter to the value of [Motor Max Revolutions].

■ E9-03: Rated Speed

No. (Hex.)	Name	Description	Default (Range)
E9-03 (11E6)	Rated Speed	V/f OLV OLV/PM AOLV/PM EZOLV Sets the rated rotation speed of the motor.	Determined by E9-01 (100 - 7200 min^{-1})

EZ Tuning automatically sets this parameter to the value of [Rated Speed].

Note:

Set *E9-01 = 0 [Motor Type Selection = IM]* before you set this parameter.

■ E9-04: Base Frequency

No. (Hex.)	Name	Description	Default (Range)
E9-04 (11E7)	Base Frequency	V/f OLV OLV/PM AOLV/PM EZOLV Sets the rated frequency of the motor.	Determined by E9-01 (40.0 - 120.0 Hz)

Note:

The unit of measure changes when the setting of *o1-04 [V/f Pattern Unit for Display]*.

EZ Tuning automatically sets this parameter to the value of [Base Frequency].

■ E9-05: Base Voltage

No. (Hex.)	Name	Description	Default (Range)
E9-05 (11E8)	Base Voltage	V/f OLV OLV/PM AOLV/PM EZOLV Sets the rated voltage of the motor.	200 V Class: 200.0 V, 400 V: 400.0 V (200 V Class: 0.0 - 255.0 V,400 V Class: 0.0 - 510.0 V)

EZ Tuning automatically sets this parameter to the value of [Base Voltage].

■ E9-06: Motor Rated Current

No. (Hex.)	Name	Description	Default (Range)
E9-06 (11E9)	Motor Rated Current	V/f OLV OLV/PM AOLV/PM EZOLV Sets the motor rated current in amps.	Determined by E9-01 and o2-04 (10% to 200% of the drive rated current)

Note:

When the drive model changes, the display units for this parameter also change.
- 0.01 A: 2001 to 2042, B001 to B018, 4001 to 4023
- 0.1 A: 2056 to 2082, 4031 to 4060

The setting value of *E9-06* is the reference value for motor protection. Enter the motor rated current written on the motor nameplate. Auto-Tuning the drive will automatically set *E9-06* to the value input for *T4-07 [Motor Rated Current]*.

■ E9-07: Motor Rated Power (kW)

No. (Hex.)	Name	Description	Default (Range)
E9-07 (11EA)	Motor Rated Power (kW)	V/f OLV OLV/PM AOLV/PM EZOLV Sets the motor rated output in the units from *o1-58 [Mot Capacity Unit]*.	Determined by E9-02 and o2-04 (0.00 - 650.00 kW)

Auto-Tuning automatically sets this parameter to the value of [Motor Rated Power (kW)].

■ E9-08: Motor Pole Count

No. (Hex.)	Name	Description	Default (Range)
E9-08 (11EB)	Motor Pole Count	V/f OLV OLV/PM AOLV/PM EZOLV Sets the number of motor poles.	4 (2 to 120)

Auto-Tuning automatically sets this parameter to the value of [Number of Motor Poles].

■ E9-09: Motor Rated Slip

No. (Hex.)	Name	Description	Default (Range)
E9-09 (11EC)	Motor Rated Slip	V/f OLV OLV/PM AOLV/PM EZOLV Sets the motor rated slip.	0.000 Hz (0.000 - 20.000 Hz)

The setting value of this parameter is the slip compensation reference value.

The drive uses the setting values of *E9-03*, *E9-04*, and *E9-08* to calculate this parameter. When Motor Rated Slip = 0, Auto-Tuning automatically sets this parameter to the value of [Motor Rated Slip].

Note:

Set *E9-01 = 0 [Motor Type Selection = IM]* before you set this parameter.

■ E9-10: Motor L-L Resistance

No. (Hex.)	Name	Description	Default (Range)
E9-10 (11ED)	Motor L-L Resistance	V/f OLV OLV/PM AOLV/PM EZOLV Sets the line-to-line resistance for the motor stator windings.	Determined by o2-04 (0.000 - 65.000 Ω)

Note:

This value is the motor line-to-line resistance. Do not set this parameter with the single-phase resistance.

Stationary Auto-Tuning automatically sets this parameter. If you cannot do Stationary Auto-Tuning, use the test report from the motor manufacturer. You can calculate the motor line-to-line resistance with one of these formulas:

- E-type insulation: the resistance value (Ω) shown on the test report at 75 °C × 0.92
- B-type insulation: the resistance value (Ω) shown on the test report at 75 °C × 0.92
- F-type insulation: the resistance value (Ω) shown on the test report at 115 °C × 0.87

12.6 F: OPTIONS

F parameters are used to set option cards, which function as interfaces for encoders, analog I/O, digital I/O, and fieldbus communication.

◆ F1: ENCODER

F1 parameters set the fault detection function in Speed Feedback (V/F Control). When *A1-02 = 0 [Control Method = V/f Control]*, set *H6-01 = 3 [PI Pulse Train Function = PG Feedback]* to enable this function. For speed feedback, connect the single-channel pulse signal from the PG encoder to pulse train input terminal PI. Use the Slip Compensation signal to improve the accuracy of Speed Control. This function is available for Motor 1.

WARNING! *Sudden Movement Hazard. Do test runs and examine the drive to make sure that the command references are correct. If you set the command reference incorrectly, it can cause damage to the drive or serious injury or death.*

WARNING! *Sudden Movement Hazard. Make sure that the host controller circuitry has correct safety design that will let you keep control of the motor if the drive loses speed feedback. If you do not have control of the motor, it can cause serious injury or death.*

■ F1-02: PGOpen Detection Select

No. (Hex.)	Name	Description	Default (Range)
F1-02 (0381)	PGOpen Detection Select	V/f OLV OLV/PM AOLV/PM EZOLV Sets the method to stop the motor or let the motor continue operating when the drive detects *PGo [Encoder (PG) Feedback Loss]*.	1 (0 - 4)

If the drive does not detect ouput pulses from the encoder for the time set in *F1-14 [Enc PGOpen Time for Detection]*, it will trigger *PGo*.

Note:
- When *A1-02 = 0 [Control Method = V/f Control]*, set *H6-01 = 3 [PI Pulse Train Function = PG Feedback]* to enable this parameter.
- Motor speed and load conditions can cause *ov [Overvoltage]* and *oC [Overcurrent]* faults.

0 : Ramp->Stop

The drive ramps the motor to stop in the deceleration time. The output terminal set for *Fault [H2-01 to H2-03 = E]* activates.

1 : Coast->Stop

The output turns off and the motor coasts to stop. The output terminal set for *Fault [H2-01 to H2-03 = E]* activates.

2 : Fast Stop (C1-09)

The drive stops the motor in the deceleration time set in *C1-09 [Fast Stop Time]*. The output terminal set for *Fault [H2-01 to H2-03 = E]* activates.

3 : Alarm Only

The keypad shows *PGo* and the drive continues operation. Only use this setting in special conditions to prevent damage to the motor and machinery. The output terminal set to *Alarm [H2-01 to H2-03 = 4]* activates.

4 : No Alarm Display

The drive continues operation and does not show *PGo* on the keypad. Only use this setting in special conditions to prevent damage to the motor and machinery.

■ F1-03: Overspeed Detection Selection

No. (Hex.)	Name	Description	Default (Range)
F1-03 (0382)	Overspeed Detection Selection	V/f OLV OLV/PM AOLV/PM EZOLV Sets the method to stop the motor or let the motor continue to operate when the drive detects *oS [Overspeed]*.	1 (0 - 3)

When the motor speed is more than the value set in *F1-08 [Overspeed Level]* for longer than the time set in *F1-09 [Overspeed Delay Time]* it will trigger *oS*.

0 : Ramp->Stop

The drive ramps the motor to stop in the deceleration time. The output terminal set for *Fault [H2-01 to H2-03 = 3]* activates.

1 : Coast->Stop

The output turns off and the motor coasts to stop. The output terminal set for *Fault [H2-01 to H2-03 = 3]* activates.

2 : Fast Stop (C1-09)

The drive stops the motor in the deceleration time set in *C1-09 [Fast Stop Time]*. The output terminal set for *Fault [H2-01 to H2-03 = 3]* activates.

3 : Alarm Only

The keypad shows *oS* and the drive continues operation. Only use this setting in special conditions to prevent damage to the motor and machinery. The output terminal set to *Alarm [H2-01 to H2-03 = 4]* activates.

Note:
- When *A1-02 = 0 [Control Method = V/f Control]*, set *H6-01 = 3 [PI Pulse Train Function = PG Feedback]* to enable this parameter.
- When *A1-02 = 6 [Control Method = PM AOLVector]*, the drive will automatically set *F1-03 = 1 [Coast->Stop]*. You cannot change this value.

■ F1-04: Speed Dev Detection Select

No. (Hex.)	Name	Description	Default (Range)
F1-04 (0383)	Speed Dev Detection Select	V/f OLV OLV/PM AOLV/PM EZOLV Sets the method to stop the motor or let the motor continue to operate when the drive detects *dEv [Speed Deviation]*.	3 (0 - 3)

When the difference between the frequency reference and the motor speed is more than the value set in *F1-10 [Speed Dev Level]* for longer than the time set in *F1-11 [Speed Dev Delay Time]*, it will trigger *dEv*.

Note:
When *A1-02 = 0 [Control Method = V/f Control]*, set *H6-01 = 3 [PI Pulse Train Function = PG Feedback]* to enable this parameter.

0 : Ramp->Stop

The drive ramps the motor to stop in the deceleration time. The output terminal set for *Fault [H2-01 to H2-03 = 3]* activates.

1 : Coast->Stop

The output turns off and the motor coasts to stop. The output terminal set for *Fault [H2-01 to H2-03 = 3]* activates.

2 : Fast Stop (C1-09)

The drive stops the motor in the deceleration time set in *C1-09 [Fast Stop Time]*. The output terminal set for *Fault [H2-01 to H2-03 = 3]* activates.

3 : Alarm Only

The keypad shows *dEv* and the drive continues operation. Only use this setting in special conditions to prevent damage to the motor and machinery. The output terminal set to *Alarm [H2-01 to H2-03 = 4]* activates.

■ F1-08: Overspeed Level

No. (Hex.)	Name	Description	Default (Range)
F1-08 (0387)	Overspeed Level	V/f OLV OLV/PM AOLV/PM EZOLV Sets the detection level of *oS [Overspeed]* as a percentage when the maximum output frequency is 100%.	115% (0 - 120%)

When the motor speed is more than the value set in *F1-08* for longer than the time set in *F1-09 [Overspeed Delay Time]*, the drive will detect *oS*.

Note:
When *A1-02 = 0 [Control Method = V/f Control]*, set *H6-01 = 3 [PI Pulse Train Function = PG Feedback]* to enable this parameter.

■ F1-09: Overspeed Delay Time

No. (Hex.)	Name	Description	Default (Range)
F1-09 (0388)	Overspeed Delay Time	V/f OLV OLV/PM AOLV/PM EZOLV Sets the length of time that the speed feedback must be more than the *F1-08* level to cause *oS [Overspeed]*.	Determined by A1-02 (0.0 - 2.0 s)

When the motor speed is more than the value set in *F1-08 [Overspeed Level]* for longer than the time set in *F1-09*, the drive will detect *oS*.

Note:
When *A1-02 = 0 [Control Method = V/f Control]*, set *H6-01 = 3 [PI Pulse Train Function = PG Feedback]* to enable this parameter.

■ F1-10: Speed Dev Level

No. (Hex.)	Name	Description	Default (Range)
F1-10 (0389)	Speed Dev Level	V/f OLV OLV/PM AOLV/PM EZOLV Sets the detection level of *dEv [Speed Deviation]* as a percentage when the maximum output frequency is 100%.	10% (0 - 50%)

When the speed deviation between the frequency reference and the actual motor speed is more than the value set in *F1-10* for longer than the time set in *F1-11 [Speed Dev Delay Time]*, the drive will detect *dEv*.

Note:
When *A1-02 = 0 [Control Method = V/f Control]*, set *H6-01 = 3 [PI Pulse Train Function = PG Feedback]* to enable this parameter.

■ F1-11: Speed Dev Delay Time

No. (Hex.)	Name	Description	Default (Range)
F1-11 (038A)	Speed Dev Delay Time	V/f OLV OLV/PM AOLV/PM EZOLV Sets the length of time that the difference between the frequency reference and speed feedback must be more than the level in *F1-10* to cause *dEv [Speed Deviation]*.	0.5 s (0.0 - 10.0 s)

When the speed deviation between the frequency reference and the actual motor speed is more than the value set in *F1-10 [Speed Dev Level]* for longer than the time set in *F1-11*, the drive will detect *dEv*.

Note:
When *A1-02 = 0 [Control Method = V/f Control]*, set *H6-01 = 3 [PI Pulse Train Function = PG Feedback]* to enable this parameter.

■ F1-14: Enc PGOpen Time for Detection

No. (Hex.)	Name	Description	Default (Range)
F1-14 (038D)	Enc PGOpen Time for Detection	V/f OLV OLV/PM AOLV/PM EZOLV Sets the length of time that the drive must not receive a pulse signal to cause *PGo [Encoder (PG) Feedback Loss]*.	2.0 s (0.0 - 10.0 s)

If the drive does not detect ouput pulses from the encoder for the time set in *F1-14*, it will trigger *PGo*.

Note:
- When *A1-02 = 0 [Control Method = V/f Control]*, set *H6-01 = 3 [PI Pulse Train Function = PG Feedback]* to enable this parameter.
- Motor speed and load conditions can cause *ov [Overvoltage]* and *oC [Overcurrent]* faults.

◆ F6: COMMUNICATIONS, F7: ETHERNET

F6 and F7 parameters are used to set the basic communication settings and method of fault detection for the communication option card. The communication option card parameters include common option card parameters and communication protocol-specific parameters.

The following table lists the parameters that need to be set for each communication option card.

Refer to the technical manual for each communication option card for more information on installing, wiring, and configuring the details needed before starting communication.

WARNING! *Sudden Movement Hazard. Do test runs and examine the drive to make sure that the command references are correct. If you set the command reference incorrectly, it can cause damage to the drive or serious injury or death.*

Table 12.30 Correspondence Between Communication Protocols and Parameters (SI-C3, SI-T3, SI-ET3, SI-P3, SI-S3, and SI-ES3)

Parameter	CC-Link SI-C3	MECHATROLINK-II SI-T3	MECHATROLINK-III SI-ET3	PROFIBUS-DP SI-P3	CANopen SI-S3	EtherCAT SI-ES3
F6-01 to F6-03	x	x	x	x	x	x
F6-04	x	-	-	-	-	-
F6-06 to F6-08	x	x	x	x	x	x
F6-10, F6-11	x	-	-	-	-	-
F6-14	x	x	x	x	x	x
F6-16	x	x	x	x	x	x

Parameter	CC-Link SI-C3	MECHATROLINK-II SI-T3	MECHATROLINK-III SI-ET3	PROFIBUS-DP SI-P3	CANopen SI-S3	EtherCAT SI-ES3
F6-20, F6-21	-	x	x	-	-	-
F6-22	-	x	-	-	-	-
F6-23 to F6-26	-	x	x	-	-	-
F6-30 to F6-32	-	-	-	x	-	-
F6-35, F6-36	-	-	-	-	x	-
F6-50 to F6-71	-	-	-	-	-	-
F7-01 to F7-15	-	-	-	-	-	-
F7-16	-	-	-	-	-	-
F7-17 to F7-42	-	-	-	-	-	-
F7-60 to F7-79	-	-	-	x	-	-

Table 12.31 Relation Between Communication Protocols and Parameters (SI-B3, SI-N3, SI-W3, SI-EM3, SI-EP3, and SI-EN3)

Parameter	DeviceNet SI-N3	LonWorks SI-W3	Modbus TCP/IP SI-EM3	PROFINET SI-EP3	EtherNet/IP SI-EN3
F6-01 to F6-03	x	x	x	x	x
F6-04	-	-	-	-	-
F6-06 to F6-08	x	x	x	x	x
F6-10, F6-11	-	-	-	-	-
F6-14	x	x	x	x	x
F6-16	x	x	x	x	x
F6-20, F6-21	-	-	-	-	-
F6-22	-	-	-	-	-
F6-23 to F6-26	-	-	-	-	-
F6-30 to F6-32	-	-	-	-	-
F6-35, F6-36	-	-	-	-	-
F6-50 to F6-71	x	-	-	-	-
F7-01 to F7-15	-	-	x	x	x
F7-16	-	-	x	-	-
F7-17 to F7-42	-	-	-	x	x
F7-60 to F7-79	-	-	-	-	-

■ Gateway Mode

Note:

When you use Gateway Mode, do not install the communication option in slave drives. If you install a communication option in a slave drive, the drive commands and responses will not synchronize.

In gateway mode, you can use one communication option to communicate with more than one drive.

You can use one communication option to connect a maximum of five drives to the field bus communications. Refer to Figure 12.63 for more information.

When you install a communication option on the master drive, you can use the RS-485 communication card to transmit data to slave drives that do not have a communication option.

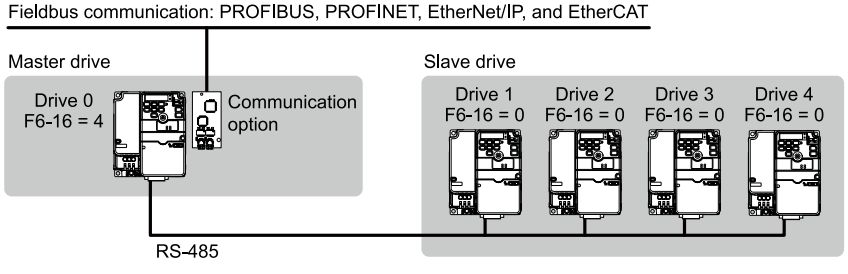

Figure 12.63 Connection Examples in Gateway Mode

Table 12.32 Specification

Item	Specification
Applicable options	All options that support the Modbus access function (for example, PROFIBUS-DP, PROFINET, EtherNet/IP, EtherCAT)
Compatible Products	Drives that can set F6-16 [Gateway Mode] *1
Number of connected drives	Maximum: 5 units
Communication specifications	Modbus (RTUmode) communications
Commands/responses	The controller can send this data to each drive (Drive 0 to Drive 4): • Control commands: Run commands and frequency references • Control responses: Output frequency and drive status (during run, faults) • Read and write parameters • Read monitors
Synchronous control	Not supported

*1 Gateway Mode is not available with Yaskawa 1000-series drives or previous series drives.

Note:
- The communication speed in gateway mode is slower than the speed in fieldbus communications. Make sure that the speed is acceptable for your system.
- Response speed with the communication option is slower than with point-to-point communications.
- Set *H5-03 [Mbus Parity]* to the same value on the master drive and slave drives.

WARNING! *Injury to Personnel. Separately prepare safety protection equipment and systems, for example fast stop switches. If the motor does not stop correctly from the disconnection of communications cable or electrical interference, it can cause serious injury.*

Configuring Gateway Mode

The following table shows sample settings to connect 4 slave drives:

Table 12.33 Sample Settings for Using Gateway Mode

	F6-16 [Gateway Mode]	H5-01 [Mbus Address] *1	H5-02 [Mbus BaudRate] H5-03 [Mbus Parity]	H5-06 [Mbus Tx Wait Time]	H5-09 [Mbus CE Detect Time]	b1-01 [Freq. Ref. Sel. 1]	b1-02 [Run Comm. Sel 1]
Drive 0 (Master Drive)	1 - 4 *2	1F (Default)	*5	5 ms (factory default) *6	≥ 2.0 s *7	3 [Option PCB]	3 [Option PCB]
Drive 1 (Slave drive)	0	01 *3 *4	*5	5 ms (factory default) *6	≥ 0.9 s *7	2 [Modbus] *8	2 [Modbus] *8
Drive 2 (Slave drive)	0	02 *3 *4	*5	5 ms (factory default) *6	≥ 0.9 s *7	2 [Modbus] *8	2 [Modbus] *8
Drive 3 (Slave drive)	0	03 *3 *4	*5	5 ms (factory default) *6	≥ 0.9 s *7	2 [Modbus] *8	2 [Modbus] *8
Drive 4 (Slave drive)	0	04 *3 *4	*5	5 ms (factory default) *6	≥ 0.9 s *7	2 [Modbus] *8	2 [Modbus] *8

*1 Restart the drive to apply the new settings.
*2 Specify the number of slave drives you will connect.
*3 Setting 0 will not let the drive respond to Modbus communications.
*4 Set a slave address that is different from other slave devices.
*5 Enter the same value that you use for the master drive.
*6 To correctly detect the response timeout, do not change the value of H5-06 from the default value.
*7 Set *H5-09 ≥ 0.9*. When *H5-09 < 0.9*, the drive will detect *CE [Modbus Communication Error]* before it detects a response timeout.
*8 On each slave drive, set *b1-01 [Freq. Ref. Sel. 1]* and *b1-02 [Run Comm. Sel 1]* to *2 [Modbus]*.

An Overview of Gateway Mode

When in gateway mode, the drive will operate as shown in Table 12.34.

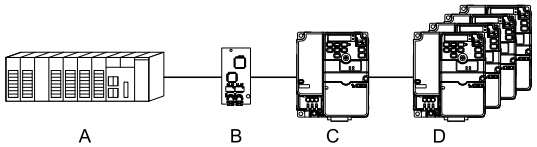

A - Controller
B - Communication Option
C - Master Drive (Drive 0)
D - Slave Drives (Drives 1 to 4)

Table 12.34 Operation in Gateway Mode

Controller to Communication Option	Communication Option to Master Drive (Drive 0)	Master Drive (Drive 0) to Slave Drives (Drives 1 to 4)
• The controller and card communicate in the format of each field bus communications protocol. • Drive 0 sends commands and monitors through normal field bus communications. • The special registers of Drive 0 use read and write to send commands to and monitor Drives 1 to 4.	Field bus communication data is written to and read from the special registers of Drive 0.	• Uses Modbus communications. • Drive 0 sends data from its special registers to Drives 1 to 4.

Operations at the Time of Communication Error

Communication Error	Error Codes	Operation
From controller to communication option	bUS	• Master drive Detects bUS *[Option Communication Error]* and operates as specified by *F6-01 [Comm.Error Selection]*. • Slave drive Detects *CE [Modbus Communication Error]* and operates as specified by *H5-04 [Mbus Error Stop]*. **Note:** • After error detection, each drive can continue the operation specified by the last received command if the *F6-01* and *H5-04* settings agree. Because the controller cannot stop the operation, you must supply a stopping method, for example an emergency stop switch. • If you set *H5-05 = 0 [Mbus Fault Detection Selection = Disabled]*, the drive will not detect *CE*. The *H5-04* setting does not have an effect.
From communication option to master drive	oFAxx	• Master drive Detects *oFAxx* and coasts to stop. • Slave drive Detects *hLCE [High Level Communication Errors]* and coasts to stop.
From master drive to slave drive	CE	The master drive stops communicating with the slave drive in these conditions: Reset the fault to restart communication. The slave drive detects *CE* after *H5-09 [Mbus CE Detect Time]* is expired. Then it operates in as specified with *H5-04 [Mbus Error Stop]*. • A message error occurred in the send data from the slave drive 10 consecutive times. • Response from the slave drive timed out 10 consecutive times.

Gateway Special Register Specification

Table 12.35 Command Data

Register No. (Hex.)	Description		
15C5	Command source update		This flag enables command updates.
	bit 0	Drive 1 Update Command Enabled	To input the Run command and frequency reference at the same time, write all commands, then change the bit value from 0 to 1.
	bit 1	Drive 2 Update Command Enabled	
	bit 2	Drive 3 Update Command Enabled	
	bit 3	Drive 4 Update Command Enabled	
	bit 4	Update Register Access Command Enabled	
	bit 5 - F	Reserved	
15C6	Run Command (Drive 1)		
	bit 0	H5-12 = 0: FWD/Stop 0 = Stop 1 = Forward run	
		H5-12 = 1: Run/Stop 0 = Stop 1 = Run	
	bit 1	H5-12 = 0: REV/Stop 0 = Stop 1 = Reverse run	
		H5-12 = 1: FWD/REV 0 = Forward run 1 = Reverse run	
	bit 2	External fault	
	bit 3	Fault Reset	
	bit 4	ComRef	
	bit 5	ComCtrl	
	bit 6 - F	Reserved	
15C7	Frequency Reference (Drive 1)		The unit of measure changes when *o1-03* changes.

Register No. (Hex.)	Description		
15C8	Run Command (Drive 2)		
15C9	Frequency Reference (Drive 2)		
15CA	Run Command (Drive 3)		
15CB	Frequency Reference (Drive 3)		
15CC	Run Command (Drive 4)		
15CD	Frequency Reference (Drive 4)		
15CE	Slave Address for Reg. Access + Read/Write		
	bit 0 bit 1 bit 2 bit 3	Slave address 0: Broadcast Messages (Modbus) 1: Drive 1 2: Drive 2 3: Drive 3 4: Drive 4 5: Broadcast Messages (run command and frequency reference)	When bit 0 to 3 = 0, access is enabled for broadcast messages only. When bit 0 to 3 = 5, access is enabled for Run command and frequency reference broadcast messages only. Drive 0 is excluded.
	bit 4	0: Read, 1: Write	
	bit 5 - F	Reserved	
15CF	Register number		
15D0	Data (write register)		

Table 12.36 Monitor Data

Register No. (Hex.)	Description		
15E7	Drive Status (Drive 1)		
	bit 0	During Run	
	bit 1	During Reverse Run	
	bit 2	Drive ready	
	bit 3	Fault	
	bit 4	Frequency Command Setting Fault	1: Upper/Lower Limit Fault
	bit 5	No response from slave	1: Response has timed out.
	bit 6	Communication Error	1: The drive detected a fault from a slave.
	bit 7	No response from slave 10 consecutive attempts.	1: Timeout occurred 10 consecutive times.
	bit 8	Communication fault occurred 10 consecutive times.	1: Fault has occurred from a slave 10 consecutive times.
	bit 9	Receive broadcast command while drive is running	1: Drive operates as specified by the broadcast message command.
	bit A	Communication error with master drive	1: The slave cannot communicate with the master because of a communication error.
	bit B - D	Reserved	
	bit E	ComRef status	
	bit F	ComCtrl status	
15E8	Output frequency or frequency reference (Drive Status Bit 1: ON) (Drive 1) Drive Status Bit 4 = 0 [Output Frequency] Drive Status Bit 4 = 1 [Frequency Reference]		The unit of measure changes when *o1-03* changes.
15E9	Drive Status (Drive 2)		
15EA	Output frequency or frequency reference (Drive Status Bit 4: ON) (Drive 2)		
15EB	Drive Status (Drive 3)		
15EC	Output frequency or frequency reference (Drive Status Bit 4: ON) (Drive 3)		
15ED	Drive Status (Drive 4)		
15EE	Output frequency or frequency reference (Drive Status Bit 4: ON) (Drive 4)		

Register No. (Hex.)	Description		
15EF	Slave Address for Reg. Access + During Modbus process & ErrCode		
	bit 0 bit 1 bit 2 bit 3 bit 4 bit 5 bit 6 bit 7	00H: Modbus Communication Complete 02H: Register number not registered 21H: Upper/Lower Limit Fault 22H: Write Mode Error 23H: Write performed during *Uv* 24H: Write performed while writing parameter settings FFH: During Modbus Communication	**Note:** If you change the access command before the Modbus access flag turns on, the drive will not do the command from before.
	bit 8 bit 9 bit A bit B	Slave address 0: Modbus command ignored 1: Drive 1 2: Drive 2 3: Drive 3 4: Drive 4 5: Broadcast Messages (run command and frequency reference)	
	bit C - F	Reserved	
15F0	Register number		
15F1	Data (write register)		

■ F6-01: Comm.Error Selection

No. (Hex.)	Name	Description	Default (Range)
F6-01 (03A2)	Comm.Error Selection	V/f OLV OLV/PM AOLV/PM EZOLV Sets the method to stop the motor or let the motor continue operating when the drive detects *bUS [Option Communication Error]*.	1 (0 - 5)

0 : Ramp->Stop

The drive ramps the motor to stop in the deceleration time. The output terminal set for *Fault [H2-01 to H2-03 = 3]* activates.

1 : Coast->Stop

The output turns off and the motor coasts to stop. The output terminal set for *Fault [H2-01 to H2-03 = 3]* activates.

2 : Fast Stop (C1-09)

The drive stops the motor in the deceleration time set in *C1-09 [Fast Stop Time]*. The output terminal set for *Fault [H2-01 to H2-03 = 3]* activates.

3 : Alarm Only

The keypad shows *bUS* and the drive continues operation at the current frequency reference.

Note:

Separately prepare safety protection equipment and systems, for example fast stop switches.

The output terminal set to *Alarm [H2-01 to H2-03 = 4]* activates.

4 : AL-Run at d1-04

The keypad shows *bUS* and the drive continues operation at the speed set in *d1-04 [Reference 4]*.

Note:

Separately prepare safety protection equipment and systems, for example fast stop switches.

5 : AL-Ramp Stop

The drive stops the motor during the deceleration time set in *C1-02 [Decel Time 1]*.

After you remove the *bUS* alarm, the motor will accelerate to the previous frequency reference.

■ F6-02: Comm Ext Flt Detect (EF0)

No. (Hex.)	Name	Description	Default (Range)
F6-02 (03A3)	Comm Ext Flt Detect (EF0)	V/f OLV OLV/PM AOLV/PM EZOLV Sets the conditions at which *EF0 [Option Card External Fault]* is detected.	0 (0, 1)

0 : Always Detected

1 : Detect@RUN Only

■ F6-03: Comm Ext Flt Select (EF0)

No. (Hex.)	Name	Description	Default (Range)
F6-03 (03A4)	Comm Ext Flt Select (EF0)	V/f OLV OLV/PM AOLV/PM EZOLV Sets the method to stop the motor or let the motor continue operating when the drive detects *EF0 [Option Card External Fault]*.	1 (0 - 3)

0 : Ramp->Stop

The drive ramps the motor to stop in the deceleration time. The output terminal set for *Fault [H2-01 to H2-03 = 3]* activates.

1 : Coast->Stop

The output turns off and the motor coasts to stop. The output terminal set for *Fault [H2-01 to H2-03 = 3]* activates.

2 : Fast Stop (C1-09)

The drive stops the motor in the deceleration time set in *C1-09 [Fast Stop Time]*. The output terminal set for *Fault [H2-01 to H2-03 = 3]* activates.

3 : Alarm Only

The keypad shows *EF0* and the drive continues operation.

Note:

Separately prepare safety protection equipment and systems, for example fast stop switches.

The output terminal set to *Alarm [H2-01 to H2-03 = 4]* activates.

■ F6-04: bUS Err Det.Time

No. (Hex.)	Name	Description	Default (Range)
F6-04 (03A5)	bUS Err Det.Time	V/f OLV OLV/PM AOLV/PM EZOLV Sets the delay time for the drive to detect *bUS [Option Communication Error]*.	2.0 s (0.0 - 12.0 s)

Note:

When you install an option card in the drive, the parameter value changes to 0.0 s.

■ F6-06: Trq Lim Com Option

No. (Hex.)	Name	Description	Default (Range)
F6-06 (03A7)	Trq Lim Com Option	V/f OLV OLV/PM AOLV/PM EZOLV Sets the function that enables and disables the torque reference and torque limit received from the communication option.	0 (0, 1)

0 : Disabled

1 : Enabled

■ F6-07: Multi-Ref@NetRef/ComRef

No. (Hex.)	Name	Description	Default (Range)
F6-07 (03A8)	Multi-Ref@NetRef/ ComRef	V/f OLV OLV/PM AOLV/PM EZOLV Sets the function that enables and disables the multi-step speed reference when the freqency reference source is NetRef or ComRef (communication option card or Modbus communications).	1 (0, 1)

0 : Disable MultiStep References

When NetRef or ComRef are the frequency reference source, the multi-step speed reference (2-step speed to 16-step speed references) and the Jog Frequency Reference (JOG command) are disabled.

1 : Enable MultiStep References

When NetRef or ComRef are the frequency reference source, the multi-step speed reference (2-step speed through 16-step speed references) and the Jog Frequency Reference (JOG command) are enabled, and you can change the frequency reference.

■ F6-08: Comm Par RST@Initialize

No. (Hex.)	Name	Description	Default (Range)
F6-08 (036A)	Comm Par RST@Initialize	V/f OLV OLV/PM AOLV/PM EZOLV Sets the function to initialize *F6-xx and F7-xx parameters* when the drive is initialized with *A1-03 [Initialize Parameters]*.	0 (0, 1)

0 : Retain Pars - No Reset

1 : Factory Default - Reset

Note:

When you use *A1-03* to initialize the drive, this setting will not change.

■ F6-10: CCLink Node Address

No. (Hex.)	Name	Description	Default (Range)
F6-10 (03B6)	CCLink Node Address	V/f OLV OLV/PM AOLV/PM EZOLV Sets the node address for CC-Link communication. Restart the drive after you change the parameter setting.	0 (0 - 64)

Note:

Be sure to set a node address that is different than all other node addresses. Do not set this parameter to *0*. Incorrect parameter settings will cause *AEr [Station Address Setting Error]* errors and the L.ERR LED on the option will come on.

When the only drive is connected, you can connect a maximum of 42 nodes. Follow these rules to connect devices that are not drives:

- $\{(1 \times a) + (2 \times b) + (3 \times c) + (4 \times d)\} \leq 64$
  (a: number of units that occupies 1 node, b: number of units that occupies 2 nodes, c: number of units that occupies 3 nodes, d: number of units that occupies 4 nodes)
- $\{(16 \times A) + (54 \times B) + (88 \times C)\} \leq 2304$
  (A: number of remote I/O nodes (64 max.), B: number of remote device nodes (42 max.), C: number of local nodes (26 max.))

■ F6-11: CCLink Comm Speed

No. (Hex.)	Name	Description	Default (Range)
F6-11 (03B7)	CCLink Comm Speed	V/f OLV OLV/PM AOLV/PM EZOLV Sets the communication speed for CC-Link communication. Restart the drive after you change the parameter setting.	0 (0 - 4)

0 : 156 kbps

1 : 625 kbps

2 : 2.5 Mbps

3 : 5 Mbps

4 : 10 Mbps

■ F6-14: BUS Err. AutoReset

No. (Hex.)	Name	Description	Default (Range)
F6-14 (03BB)	BUS Err. AutoReset	V/f OLV OLV/PM AOLV/PM EZOLV Sets the automatic reset function for *bUS [Option Communication Errors]*.	0 (0, 1)

0 : Disabled

1 : Enabled

■ F6-15: Comm. Option Parameters Reload

No. (Hex.)	Name	Description	Default (Range)
F6-15 (0B5B)	Comm. Option Parameters Reload	V/f OLV OLV/PM AOLV/PM EZOLV Sets the update method when you change *F6-xx, F7-xx [F6: COMMUNICATIONS, F7: ETHERNET]*.	0 (0 - 2)

Note:
- Set *F6-15 = 0, 1* to reload *F6-xx*, *F7-xx*.
- Set *F6-15 = 0, 1* to reset the display on the keypad to *0*.

0 : Reload@Next Power Cycle

Restart the drive to update parameters.

1 : Reload Now

The changed parameters are updated without restarting the drive.

2 : Cancel Reload Request

Cancels *CyPo [Cycle Power to Accept Changes]*.

■ F6-16: Gateway Mode

No. (Hex.)	Name	Description	Default (Range)
F6-16 (0B8A)	Gateway Mode	V/f OLV OLV/PM AOLV/PM EZOLV Sets the gateway mode operation and the number of connected slave drives.	0 (0 to 4)

0 : Disabled
1 : 1 Slave Drive
2 : 2 Slave Drives
3 : 3 Slave Drives
4 : 4 Slave Drives

■ F6-20: MLII Address

No. (Hex.)	Name	Description	Default (Range)
F6-20 (036B)	MLII Address	V/f OLV OLV/PM AOLV/PM EZOLV Sets the station address for MECHATROLINK communication. Change the parameter then cycle power on the drive.	0021h (MECHATROLINK-II: 0020h - 003Fh, MECHATROLINK-III: 0003h - 00EFh)

Note:
- The setting range changes if using MECHATROLINK-II or MECHATROLINK-III:
  – MECHATROLINK-II (SI-T3) range: 20 to 3F
  – MECHATROLINK-III (SI-ET3) range: 03 to EF
- Be sure to set a node address that is different than all other node addresses. Incorrect parameter settings will cause *AEr [Station Address Setting Error]* errors and the L.ERR LED on the option will come on.
- The drive detects *AEr* errors when the station address is 20 or 3F.

■ F6-21: MLII Frame Size

No. (Hex.)	Name	Description	Default (Range)
F6-21 (036C)	MLII Frame Size	V/f OLV OLV/PM AOLV/PM EZOLV Sets the frame size for MECHATROLINK communication. Restart the drive after you change the parameter setting.	0 (0, 1)

0 : 32-byte
1 : 17-byte

■ F6-22: MLII Link Speed

No. (Hex.)	Name	Description	Default (Range)
F6-22 (036D)	MLII Link Speed	V/f OLV OLV/PM AOLV/PM EZOLV Sets the communications speed for MECHATROLINK-II. Restart the drive after you change the parameter setting.	0 (0, 1)

Note:
This parameter is only available with the MECHATROLINK-II option.

0 : 10 Mbps
1 : 4 Mbps

■ F6-23: MLII Mon Sel (E)

No. (Hex.)	Name	Description	Default (Range)
F6-23 (036E)	MLII Mon Sel (E)	V/f OLV OLV/PM AOLV/PM EZOLV Sets the Modbus register used for the monitor functions of INV_CTL (drive operation control command) and INV_I/O (drive I/O control command). Restart the drive after you change the parameter setting.	0000h (0000h - FFFFh)

To enable the Modbus register set in *F6-23*, set SEL_MON2/1 to 0EH or set SEL_MON 3/4 and SEL_MON 5/6 to 0EH. Bytes of the response data enable the Modbus register content that was set in *F6-23*.

■ F6-24: MLII Mon Sel (F)

No. (Hex.)	Name	Description	Default (Range)
F6-24 (036F)	MLII Mon Sel (F)	V/f OLV OLV/PM AOLV/PM EZOLV Sets the Modbus register used for the monitor functions of INV_CTL (drive operation control command) and INV_I/O (drive I/O control command). Restart the drive after you change the parameter setting.	0000h (0000h - FFFFh)

To enable the Modbus register set in *F6-24*, set SEL_MON2/1 to 0FH or set SEL_MON3/4 and SEL_MON 5/6 to 0FH. Bytes of the response data enable the Modbus register content that was set *F6-24*.

■ F6-25: MLII Watchdog Error Sel

No. (Hex.)	Name	Description	Default (Range)
F6-25 (03C9)	MLII Watchdog Error Sel	V/f OLV OLV/PM AOLV/PM EZOLV Sets the method to stop the motor or let the motor continue operating when the drive detects *E5 [MECHATROLINK Watchdog Timer Err]*.	1 (0 - 3)

0 : Ramp->Stop

The drive ramps the motor to stop in the deceleration time. The output terminal set for *Fault [H2-01 to H2-03 = 3]* activates.

1 : Coast->Stop

The output turns off and the motor coasts to stop. The output terminal set for *Fault [H2-01 to H2-03 = 3]* activates.

2 : Fast Stop (C1-09)

The drive stops the motor in the deceleration time set in *C1-09 [Fast Stop Time]*. The output terminal set for *Fault [H2-01 to H2-03 = 3]* activates.

3 : Alarm Only

The keypad shows *E5*, and the drive continues to operate.

Note:

Separately prepare safety protection equipment and systems, for example fast stop switches.

The output terminal set to *Alarm [H2-01 to H2-03 = 4]* activates.

■ F6-26: MLII bUS Err Detected

No. (Hex.)	Name	Description	Default (Range)
F6-26 (03CA)	MLII bUS Err Detected	V/f OLV OLV/PM AOLV/PM EZOLV Sets the number of times that the option must detect a *bUS* alarm to cause a *bUS [Option Communication Error]*.	2 (2 - 10 times)

■ F6-30: PROFI-DP Address

No. (Hex.)	Name	Description	Default (Range)
F6-30 (03CB)	PROFI-DP Address	V/f OLV OLV/PM AOLV/PM EZOLV Sets the node address for PROFIBUS-DP communication. Restart the drive after you change the parameter setting.	0 (0 - 125)

Note:

- Be sure to set a node address that is different than all other node addresses.
- Node addresses 0, 1, and 2 are usually reserved for control, maintenance, and device self-diagnosis.

■ F6-31: PROFI-DP Clear Command Mode

No. (Hex.)	Name	Description	Default (Range)
F6-31 (03CC)	PROFI-DP Clear Command Mode	V/f OLV OLV/PM AOLV/PM EZOLV Sets what the drive will do after it receives the Clear Mode command.	0 (0, 1)

0 : Reset

Resets drive settings, for example frequency reference and I/O settings.

1 : Hold Previous State

The drive keeps the same status as before it received the command.

■ F6-32: PROFI-DP Data Format Select

No. (Hex.)	Name	Description	Default (Range)
F6-32 (03CD)	PROFI-DP Data Format Select	V/f OLV OLV/PM AOLV/PM EZOLV Sets the data format of PROFIBUS-DP communication. Restart the drive after you change the parameter setting.	0 (0 - 5)

Note:

The *H5-11 [Mbus ENTER Command Mode]* setting makes the RAM enter command necessary or not necessary to write parameters over network communication. When *F6-32 = 0, 1, or 2*, the *H5-11* setting does not have an effect. The RAM enter command is always necessary to write parameters.

0 : PPO Type

1 : Conventional

2 : PPO (bit0)

This function operates when bit 0 and bit 4 in the register STW have values of 1 (operate). Refer to the PROFIBUS-DP communication manual for more information.

3 : PPO (Enter)

4 : Conv (Enter)

5 : PPO (bit0,Enter)

This function operates when bit 0 and bit 4 in the register STW have values of 1 (operate). Refer to the PROFIBUS-DP communication manual for more information.

■ F6-35: CANopen Address

No. (Hex.)	Name	Description	Default (Range)
F6-35 (03D0)	CANopen Address	V/f OLV OLV/PM AOLV/PM EZOLV Sets the node address for CANopen communication. Restart the drive after you change the parameter setting.	0 (0 - 126)

Note:

Be sure to set an address that is different than all other node addresses. Do not set this parameter to *0*. Incorrect parameter settings will cause *AEr [Station Address Setting Error]* errors and the L.ERR LED on the option will come on.

■ F6-36: CANopen BaudRate

No. (Hex.)	Name	Description	Default (Range)
F6-36 (03D1)	CANopen BaudRate	V/f OLV OLV/PM AOLV/PM EZOLV Sets the CANopen communications speed. Restart the drive after you change the parameter setting.	0 (0 - 8)

0 : Auto-Detection

The drive detects the network communication speed and automatically adjusts the communications speed.

1 : 10 kbps

2 : 20 kbps

3 : 50 kbps

4 : 125 kbps

5 : 250 kbps

6 : 500 kbps
7 : 800 kbps
8 : 1 Mbps

■ F6-50: DNet MAC Address

No. (Hex.)	Name	Description	Default (Range)
F6-50 (03C1)	DNet MAC Address	V/f OLV OLV/PM AOLV/PM EZOLV Sets the MAC address for DeviceNet communication. Restart the drive after you change the parameter setting.	0 (0 - 64)

Note:
Be sure to set a MAC address that is different than all other node addresses. Do not set this parameter to 0. Incorrect parameter settings will cause *AEr [Station Address Setting Error]* errors and the MS LED on the option will flash.

■ F6-51: DNet Baud Rate

No. (Hex.)	Name	Description	Default (Range)
F6-51 (03C2)	DNet Baud Rate	V/f OLV OLV/PM AOLV/PM EZOLV Sets the DeviceNet communications speed. Restart the drive after you change the parameter setting.	0 (0 - 4)

0 : 125 kbps
1 : 250 kbps
2 : 500 kbps
3 : Adjustable from Network
The controller sets the communications speed.
4 : Detect Automatically
The drive detects the network communication speed and automatically adjusts the communications speed.

■ F6-52: DNet PCA Setting

No. (Hex.)	Name	Description	Default (Range)
F6-52 (03C3)	DNet PCA Setting	V/f OLV OLV/PM AOLV/PM EZOLV Sets the format of data that the DeviceNet communication master sends to the drive.	21 (0 - 255)

Note:
If *F6-52* and *F6-53 [DNet PPA Setting]* are not correct, the value is reset to default.

■ F6-53: DNet PPA Setting

No. (Hex.)	Name	Description	Default (Range)
F6-53 (03C4)	DNet PPA Setting	V/f OLV OLV/PM AOLV/PM EZOLV Sets the format of data that the drive sends to the DeviceNet communication master.	71 (0 - 255)

Note:
If *F6-52 [DNet PCA Setting]* and *F6-53* are not correct, the value is reset to default.

■ F6-54: DNet Idle Fault Detection

No. (Hex.)	Name	Description	Default (Range)
F6-54 (03C5)	DNet Idle Fault Detection	V/f OLV OLV/PM AOLV/PM EZOLV Sets the function to detect *EF0 [Option Card External Fault]* when the drive does not receive data from the DeviceNet master.	0 (0 - 4)

0 : Enabled
1 : Disabled, No Fault Detection
Does not detect *EF0* issues.
2 : Vendor Specific
3 : RUN Forward

4 : RUN Reverse

■ F6-55: DNet Baud Monitor

No. (Hex.)	Name	Description	Default (Range)
F6-55 (03C6)	DNet Baud Monitor	V/f OLV OLV/PM AOLV/PM EZOLV Sets the function to see the actual DeviceNet communications speed using the keypad. This parameter functions as a monitor only.	0 (0 - 2)

0 : 125 kbps
1 : 250 kbps
2 : 500 kbps

■ F6-56: DNet Speed Scale Factor

No. (Hex.)	Name	Description	Default (Range)
F6-56 (03D7)	DNet Speed Scale Factor	V/f OLV OLV/PM AOLV/PM EZOLV Sets the speed scale for DeviceNet communication.	0 (-15 - +15)

■ F6-57: DNet Current Scale Factor

No. (Hex.)	Name	Description	Default (Range)
F6-57 (03D8)	DNet Current Scale Factor	V/f OLV OLV/PM AOLV/PM EZOLV Sets the current scale of the DeviceNet communication master.	0 (-15 - +15)

■ F6-58: DNet Torque Scale Factor

No. (Hex.)	Name	Description	Default (Range)
F6-58 (03D9)	DNet Torque Scale Factor	V/f OLV OLV/PM AOLV/PM EZOLV Sets the torque scale of the DeviceNet communication master.	0 (-15 - +15)

■ F6-59: DNet Power Scaling

No. (Hex.)	Name	Description	Default (Range)
F6-59 (03DA)	DNet Power Scaling	V/f OLV OLV/PM AOLV/PM EZOLV Sets the power scale of the DeviceNet communication master.	0 (-15 - +15)

■ F6-60: DNet Voltage Scale

No. (Hex.)	Name	Description	Default (Range)
F6-60 (03DB)	DNet Voltage Scale	V/f OLV OLV/PM AOLV/PM EZOLV Sets the voltage scale of the DeviceNet communication master.	0 (-15 - +15)

■ F6-61: DNet Time Scale

No. (Hex.)	Name	Description	Default (Range)
F6-61 (03DC)	DNet Time Scale	V/f OLV OLV/PM AOLV/PM EZOLV Sets the time scale of the DeviceNet communication master.	0 (-15 - +15)

■ F6-62: DNet Heartbeat Interval

No. (Hex.)	Name	Description	Default (Range)
F6-62 (03DD)	DNet Heartbeat Interval	V/f OLV OLV/PM AOLV/PM EZOLV Sets the heartbeat for DeviceNet communication. Set this parameter to 0 to disable the heartbeat function.	0 (0 - 10)

■ F6-63: DNet Network MAC ID

No. (Hex.)	Name	Description	Default (Range)
F6-63 (03DE)	DNet Network MAC ID	V/f OLV OLV/PM AOLV/PM EZOLV Sets the function to see the actual DeviceNet MAC address using the keypad. This parameter functions as a monitor only.	0 (0 - 63)

■ F6-64 to F6-67: DynOut.Ass109 P1 to P4

No. (Hex.)	Name	Description	Default (Range)
F6-64 to F6-67 (03DF - 03E2)	DynOut.Ass109 P1 to P4	V/f OLV OLV/PM AOLV/PM EZOLV Sets Configurable Outputs 1 to 4 written to the Modbus register.	0000h (0000h - FFFFh)

■ F6-68 to F6-71: DynIn.Ass159 P1 to 4

No. (Hex.)	Name	Description	Default (Range)
F6-68 to F6-71 (03E3, 03E4, 03C7, and 03C8)	DynIn.Ass159 P1 to 4	V/f OLV OLV/PM AOLV/PM EZOLV Sets Configurable Inputs 1 to 4 written to the Modbus register.	0000h (0000h - FFFFh)

■ F6-72: PowerLink Address

No. (Hex.)	Name	Description	Default (Range)
F6-72 (081B)	PowerLink Address	V/f OLV OLV/PM AOLV/PM EZOLV Sets the node ID for PowerLink communication.	0 (0 - 255)

■ F7-01: IP Address 1

No. (Hex.)	Name	Description	Default (Range)
F7-01 (03E5)	IP Address 1	V/f OLV OLV/PM AOLV/PM EZOLV Sets the first octet of the IP Address for the device that is connecting to the network. Restart the drive after you change this parameter.	192 (0 - 255)

Note:

When *F7-13 = 0 [Addr Mode@Startup = Static]*:

- Use parameters *F7-01 to F7-04* to set the IP Address. Be sure to set a different IP address for each drive on the network.
- Also set parameters *F7-01 to F7-12*.

■ F7-02: IP Address 2

No. (Hex.)	Name	Description	Default (Range)
F7-02 (03E6)	IP Address 2	V/f OLV OLV/PM AOLV/PM EZOLV Sets the second octet of the IP Address for the device that is connecting to the network. Restart the drive after you change this parameter.	168 (0 - 255)

Note:

When *F7-13 = 0 [Addr Mode@Startup = Static]*:

- Use parameters *F7-01 to F7-04* to set the IP Address. Be sure to set a different IP address for each drive on the network.
- Also set parameters *F7-01 to F7-12*.

■ F7-03: IP Address 3

No. (Hex.)	Name	Description	Default (Range)
F7-03 (03E7)	IP Address 3	V/f OLV OLV/PM AOLV/PM EZOLV Sets the third octet of the IP Address for the device that is connecting to the network. Restart the drive after you change this parameter.	1 (0 - 255)

Note:

When *F7-13 = 0 [Addr Mode@Startup = Static]*:

- Use parameters *F7-01 to F7-04* to set the IP Address. Be sure to set a different IP address for each drive on the network.
- Also set parameters *F7-01 to F7-12*.

■ F7-04: IP Address 4

No. (Hex.)	Name	Description	Default (Range)
F7-04 (03E8)	IP Address 4	V/f OLV OLV/PM AOLV/PM EZOLV Sets the fourth octet of the IP Address for the device that is connecting to the network. Restart the drive after you change this parameter.	20 (0 - 255)

Note:

When *F7-13 = 0 [Addr Mode@Startup = Static]*:
- Use parameters *F7-01 to F7-04* to set the IP Address. Be sure to set a different IP address for each drive on the network.
- Also set parameters *F7-01 to F7-12*.

■ F7-05: Subnet Mask 1

No. (Hex.)	Name	Description	Default (Range)
F7-05 (03E9)	Subnet Mask 1	V/f OLV OLV/PM AOLV/PM EZOLV Sets the first octet of the subnet mask of the connected network.	255 (0 - 255)

Note:

Set this parameter when *F7-13 = 0 [Addr Mode@Startup = Static]*.

■ F7-06: Subnet Mask 2

No. (Hex.)	Name	Description	Default (Range)
F7-06 (03EA)	Subnet Mask 2	V/f OLV OLV/PM AOLV/PM EZOLV Sets the second octet of the subnet mask of the connected network.	255 (0 - 255)

Note:

Set this parameter when *F7-13 = 0 [Addr Mode@Startup = Static]*.

■ F7-07: Subnet Mask 3

No. (Hex.)	Name	Description	Default (Range)
F7-07 (03EB)	Subnet Mask 3	V/f OLV OLV/PM AOLV/PM EZOLV Sets the third octet of the subnet mask of the connected network.	255 (0 - 255)

Note:

Set this parameter when *F7-13 = 0 [Addr Mode@Startup = Static]*.

■ F7-08: Subnet Mask 4

No. (Hex.)	Name	Description	Default (Range)
F7-08 (03EC)	Subnet Mask 4	V/f OLV OLV/PM AOLV/PM EZOLV Sets the fourth octet of the subnet mask of the connected network.	0 (0 - 255)

Note:

Set this parameter when *F7-13 = 0 [Addr Mode@Startup = Static]*.

■ F7-09: Gateway Addr 1

No. (Hex.)	Name	Description	Default (Range)
F7-09 (03ED)	Gateway Addr 1	V/f OLV OLV/PM AOLV/PM EZOLV Sets the first octet of the gateway address of the connected network.	192 (0 - 255)

Note:

Set this parameter when *F7-13 = 0 [Addr Mode@Startup = Static]*.

■ F7-10: Gateway Addr 2

No. (Hex.)	Name	Description	Default (Range)
F7-10 (03EE)	Gateway Addr 2	V/f OLV OLV/PM AOLV/PM EZOLV Sets the second octet of the gateway address of the connected network.	168 (0 - 255)

Note:
Set this parameter when *F7-13 = 0 [Addr Mode@Startup = Static]*.

■ F7-11: Gateway Addr 3

No. (Hex.)	Name	Description	Default (Range)
F7-11 (03EF)	Gateway Addr 3	V/f OLV OLV/PM AOLV/PM EZOLV Sets the third octet of the gateway address of the connected network.	1 (0 - 255)

Note:
Set this parameter when *F7-13 = 0 [Addr Mode@Startup = Static]*.

■ F7-12: Gateway Addr 4

No. (Hex.)	Name	Description	Default (Range)
F7-12 (03F0)	Gateway Addr 4	V/f OLV OLV/PM AOLV/PM EZOLV Sets the fourth octet of the gateway address of the connected network.	1 (0 - 255)

Note:
Set this parameter when *F7-13 = 0 [Addr Mode@Startup = Static]*.

■ F7-13: Addr Mode@Startup

No. (Hex.)	Name	Description	Default (Range)
F7-13 (03F1)	Addr Mode@Startup	V/f OLV OLV/PM AOLV/PM EZOLV Sets the method to set option card IP addresses.	2 (0 - 2)

0 : Static

1 : BOOTP

2 : DHCP

- The following setting values are available when using the PROFINET communication option card (SI-EP3).
  - 0: Static
  - 2: DHCP
- When *F7-13 = 0*, set parameters *F7-01 to F7-12 [IP Address 1 to Gateway Addr 4]* to set the IP Address. Be sure to set a different IP address for each drive on the network.

■ F7-14: Duplex Mode Selection

No. (Hex.)	Name	Description	Default (Range)
F7-14 (03F2)	Duplex Mode Selection	V/f OLV OLV/PM AOLV/PM EZOLV Sets the duplex mode setting method.	1 (0 - 8)

0 : Half/Half

1 : Auto/Auto

2 : Full/Full

3 : Half/Auto

Port 1 is set to "Half" and port 2 is set to "Auto".

4 : Half/Full

Port 1 is set to "Half" and port 2 is set to "Full".

5 : Auto/Half

Port 1 is set to "Auto" and port 2 is set to "Half".

6 : Auto/Full

Port 1 is set to "Auto" and port 2 is set to "Full".

7 : Full/Half

Port 1 is set to "Full" and port 2 is set to "Half".

8 : Full/Auto

Port 1 is set to “Full” and port 2 is set to “Auto”.

■ F7-15: Comm. BaudRate

No. (Hex.)	Name	Description	Default (Range)
F7-15 (03F3)	Comm. BaudRate	V/f OLV OLV/PM AOLV/PM EZOLV Sets the communications speed.	10 (10, 100 - 102)

10 : 10/10 Mbps
100 : 100/100 Mbps
101 : 10/100 Mbps
102 : 100/10 Mbps

Note:
Set this parameter when *F7-14 = 0* or *2 [Duplex Mode Selection = Half/Half or Full/Full]*.

■ F7-16: Timeout Value

No. (Hex.)	Name	Description	Default (Range)
F7-16 (03F4)	Timeout Value	V/f OLV OLV/PM AOLV/PM EZOLV Sets the detection time for a communications timeout.	0.0 s (0.0 - 30.0 s)

Note:
Set this parameter to 0.0 to disable the connection timeout function.

■ F7-17: E/IP Speed Scale Factor

No. (Hex.)	Name	Description	Default (Range)
F7-17 (03F5)	E/IP Speed Scale Factor	V/f OLV OLV/PM AOLV/PM EZOLV Sets the scaling factor for the speed monitor in the EtherNet/IP Class ID 2AH Object.	0 (-15 - +15)

■ F7-18: E/IP Current Scale Factor

No. (Hex.)	Name	Description	Default (Range)
F7-18 (03F6)	E/IP Current Scale Factor	V/f OLV OLV/PM AOLV/PM EZOLV Sets the scaling factor for the output current monitor in the EtherNet/IP Class ID 2AH Object.	0 (-15 - +15)

■ F7-19: E/IP Torque Scale Factor

No. (Hex.)	Name	Description	Default (Range)
F7-19 (03F7)	E/IP Torque Scale Factor	V/f OLV OLV/PM AOLV/PM EZOLV Sets the scaling factor for the torque monitor in the EtherNet/IP Class ID 2AH Object.	0 (-15 - +15)

■ F7-20: E/IP Power Scale Factor

No. (Hex.)	Name	Description	Default (Range)
F7-20 (03F8)	E/IP Power Scale Factor	V/f OLV OLV/PM AOLV/PM EZOLV Sets the scaling factor for the power monitor in the EtherNet/IP Class ID 2AH Object.	0 (-15 - +15)

■ F7-21: E/IP Voltage Scale Factor

No. (Hex.)	Name	Description	Default (Range)
F7-21 (03F9)	E/IP Voltage Scale Factor	V/f OLV OLV/PM AOLV/PM EZOLV Sets the scaling factor for the voltage monitor in the EtherNet/IP Class ID 2AH Object.	0 (-15 - +15)

■ F7-22: E/IP Time Scale Factor

No. (Hex.)	Name	Description	Default (Range)
F7-22 (03FA)	E/IP Time Scale Factor	V/f OLV OLV/PM AOLV/PM EZOLV Sets the scaling factor for the time monitor in the EtherNet/IP Class ID 2AH Object.	0 (-15 - +15)

■ F7-23 to F7-32: DynOut.Ass116 P1 to 10 for CommCard

No. (Hex.)	Name	Description	Default (Range)
F7-23 - F7-27 (03FB - 03FF) F7-28- F7-32 (0370 - 0374)	DynOut.Ass116 P1 to 10 for CommCard	V/f OLV OLV/PM AOLV/PM EZOLV Sets Output Assembly 116. The drive writes the values from Output Assembly 116 to the Modbus address register that is stored for each parameter. The drive will not write the values from Output Assembly 116 to the registers when the Modbus address is 0.	0

■ F7-33 to F7-42: DynIn.Ass166 P1 to 10 for CommCard

No. (Hex.)	Name	Description	Default (Range)
F7-33 - F7-42 (0375 - 037E)	DynIn.Ass166 P1 to 10 for CommCard	V/f OLV OLV/PM AOLV/PM EZOLV Sets Input Assembly 166. The drive sends the values from the Modbus address registers stored for each parameter to Input Assembly 166. The drive returns the default register value for the option card when the Modbus address is 0 and the value sent to Input Assembly 166 is not defined.	0

■ F7-60: PZD1 WR(CtrlWrd)

No. (Hex.)	Name	Description	Default (Range)
F7-60 (0780)	PZD1 WR(CtrlWrd)	V/f OLV OLV/PM AOLV/PM EZOLV Sets the Modbus address for PZD1 (PPO output). PZD1 (PPO output) functions as the STW when *F7-60 = 0, 1, or 2*.	0

■ F7-61: PZD2 WR(FRef)

No. (Hex.)	Name	Description	Default (Range)
F7-61 (0781)	PZD2 WR(FRef)	V/f OLV OLV/PM AOLV/PM EZOLV Sets the Modbus address for PZD2 (PPO output). PZD2 (PPO output) functions as the HSW when *F7-61 = 0, 1, or 2*.	0

■ F7-62: PZD3 Write

No. (Hex.)	Name	Description	Default (Range)
F7-62 (0782)	PZD3 Write	V/f OLV OLV/PM AOLV/PM EZOLV Sets the Modbus address for PZD3 (PPO output). A value of 0, 1, or 2 will disable the PZD3 (PPO output) write operation to the Modbus register.	0

■ F7-63: PZD4 Write

No. (Hex.)	Name	Description	Default (Range)
F7-63 (0783)	PZD4 Write	V/f OLV OLV/PM AOLV/PM EZOLV Sets the Modbus address for PZD4 (PPO output). A value of 0, 1, or 2 will disable the PZD4 (PPO output) write operation to the Modbus register.	0

■ F7-64: PZD5 Write

No. (Hex.)	Name	Description	Default (Range)
F7-64 (0784)	PZD5 Write	V/f OLV OLV/PM AOLV/PM EZOLV Sets the Modbus address for PZD5 (PPO output). A value of 0, 1, or 2 will disable the PZD5 (PPO output) write operation to the Modbus register.	0

■ F7-65: PZD6 Write

No. (Hex.)	Name	Description	Default (Range)
F7-65 (0785)	PZD6 Write	V/f OLV OLV/PM AOLV/PM EZOLV Sets the Modbus address for PZD6 (PPO output). A value of 0, 1, or 2 will disable the PZD6 (PPO output) write operation to the Modbus register.	0

■ F7-66: PZD7 Write

No. (Hex.)	Name	Description	Default (Range)
F7-66 (0786)	PZD7 Write	V/f OLV OLV/PM AOLV/PM EZOLV Sets the Modbus address for PZD7 (PPO output). A value of 0, 1, or 2 will disable the PZD7 (PPO output) write operation to the Modbus register.	0

■ F7-67: PZD8 Write

No. (Hex.)	Name	Description	Default (Range)
F7-67 (0787)	PZD8 Write	V/f OLV OLV/PM AOLV/PM EZOLV Sets the Modbus address for PZD8 (PPO output). A value of 0, 1, or 2 will disable the PZD8 (PPO output) write operation to the Modbus register.	0

■ F7-68: PZD9 Write

No. (Hex.)	Name	Description	Default (Range)
F7-68 (0788)	PZD9 Write	V/f OLV OLV/PM AOLV/PM EZOLV Sets the Modbus address for PZD9 (PPO output). A value of 0, 1, or 2 will disable the PZD9 (PPO output) write operation to the Modbus register.	0

■ F7-69: PZD10 Write

No. (Hex.)	Name	Description	Default (Range)
F7-69 (0789)	PZD10 Write	V/f OLV OLV/PM AOLV/PM EZOLV Sets the Modbus address for PZD10 (PPO output). A value of 0, 1, or 2 will disable the PZD10 (PPO output) write operation to the Modbus register.	0

■ F7-70: PZD1 RD (StatWord)

No. (Hex.)	Name	Description	Default (Range)
F7-70 (078A)	PZD1 RD (StatWord))	V/f OLV OLV/PM AOLV/PM EZOLV Sets the Modbus address for PZD1 (PPO Read). PZD1 (PPO input) functions as the ZSW when *F7-70 = 0*.	0

■ F7-71: PZD2 RD (OutFreq)

No. (Hex.)	Name	Description	Default (Range)
F7-71 (078B)	PZD2 RD (OutFreq)	V/f OLV OLV/PM AOLV/PM EZOLV Sets the Modbus address for PZD2 (PPO Read). PZD2 (PPO input) functions as the HIW when *F7-71 = 0*.	0

■ F7-72: PZD3 Read

No. (Hex.)	Name	Description	Default (Range)
F7-72 (078C)	PZD3 Read	V/f OLV OLV/PM AOLV/PM EZOLV Sets the Modbus address for PZD3 (PPO Read). A value of 0 will disable the PZD3 (PPO Read) load operation from the Modbus register.	0

■ F7-73: PZD4 Read

No. (Hex.)	Name	Description	Default (Range)
F7-73 (078D)	PZD4 Read	V/f OLV OLV/PM AOLV/PM EZOLV Sets the Modbus address for PZD4 (PPO Read). A value of 0 will disable the PZD4 (PPO Read) load operation from the Modbus register.	0

■ F7-74: PZD5 Read

No. (Hex.)	Name	Description	Default (Range)
F7-74 (078E)	PZD5 Read	V/f OLV OLV/PM AOLV/PM EZOLV Sets the Modbus address for PZD5 (PPO Read). A value of 0 will disable the PZD5 (PPO Read) load operation from the Modbus register.	0

■ F7-75: PZD6 Read

No. (Hex.)	Name	Description	Default (Range)
F7-75 (078F)	PZD6 Read	V/f OLV OLV/PM AOLV/PM EZOLV Sets the Modbus address for PZD6 (PPO Read). A value of 0 will disable the PZD6 (PPO Read) load operation from the Modbus register.	0

■ F7-76: PZD7 Read

No. (Hex.)	Name	Description	Default (Range)
F7-76 (0790)	PZD7 Read	V/f OLV OLV/PM AOLV/PM EZOLV Sets the Modbus address for PZD7 (PPO Read). A value of 0 will disable the PZD7 (PPO input) load operation from the Modbus register.	0

■ F7-77: PZD8 Read

No. (Hex.)	Name	Description	Default (Range)
F7-77 (0791)	PZD8 Read	V/f OLV OLV/PM AOLV/PM EZOLV Sets the Modbus address for PZD8 (PPO Read). A value of 0 will disable the PZD8 (PPO Read) load operation from the Modbus register.	0

■ F7-78: PZD9 Read

No. (Hex.)	Name	Description	Default (Range)
F7-78 (0792)	PZD9 Read	V/f OLV OLV/PM AOLV/PM EZOLV Sets the Modbus address for PZD9 (PPO Read). A value of 0 will disable the PZD9 (PPO Read) load operation from the Modbus register.	0

■ F7-79: PZD10 Read

No. (Hex.)	Name	Description	Default (Range)
F7-79 (0793)	PZD10 Read	V/f OLV OLV/PM AOLV/PM EZOLV Sets the Modbus address for PZD10 (PPO Read). A value of 0 will disable the PZD10 (PPO Read) load operation from the Modbus register.	0

12.7 H: TERMINALS

H parameters set functions for external input and output terminals.

◆ H1: DIGITAL INPUTS

H1 Parameters set the MFDI terminal functions.

■ H1-01 to H1-07 Terminal DI1 to DI7 Function Selection

The drive has 7 MFDI terminals. These are the drive default settings and functions.

Table 12.37 MFDI Default Settings and Functions

No.	Name	Default	Function
H1-01	DI1 Function Selection	1 (0) *1	Forward Run
H1-02	DI2 Function Selection	2 (0) *1	Reverse Run
H1-03	DI3 Function Selection	24	ExF NO-AlCoast
H1-04	DI4 Function Selection	7B	Fault Reset
H1-05	DI5 Function Selection	A (5) *1	MultSpd Ref1
H1-06	DI6 Function Selection	B (A) *1	MultSpd Ref2
H1-07	DI7 Function Selection	6 (B) *1	Jog Reference

*1 The value in parentheses identifies the default setting when you set *A1-03 = 3330 [Init Parameters = 3-Wire Initialization]*.

Refer to Table 12.38 and use *H1-xx [MFDI Function Select]* to set the function.

Table 12.38 MFDI Setting Values

Setting Value	Function	Reference
0	Through Mode	569
1 *1	Forward RUN (2-Wire)	570
2 *1	Reverse RUN (2-Wire)	570
3 *1	Run Command (2-Wire Sequence 2)	570
4 *1	FWD/REV (2-Wire Sequence 2)	570
5 *1	3-Wire Sequence	571
6	Jog Reference Selection	571
7 *1	Forward Jog	572
8 *1	Reverse Jog	572
9	External Reference 1/2 Selection	572
A	Multi-Step Speed Reference 1	572
B	Multi-Step Speed Reference 2	572
C	Multi-Step Speed Reference 3	573
D	Multi-Step Speed Reference 4	573
E	Add Offset Frequency 1 (d7-03)	573
F	Add Offset Frequency 2 (d7-03)	573
10	Add Offset Frequency 3 (d7-03)	573
11	LOCAL/REMOTE Selection	573
12	Analog Terminal Enable Selection	574
15	Reverse Rotation Identifier	574
16	Reference Sample Hold	574
17	Accel/Decel Ramp Hold	574
18	Accel/Decel Time Selection 1	575
19	Accel/Decel Time Selection 2	575
1A	Drive Enable	575
1B *1	Baseblock Command (N.O.)	575

Setting Value	Function	Reference
1E *1	Baseblock Command (N.C.)	576
20 to 2F *1	External fault	576
30	DC Injection Braking Command	577
32	High Slip Braking (HSB)	577
34 *1	Fast Stop (N.O.)	577
35 *1	Fast Stop (N.C.)	577
3E *1	Short Circuit Braking (N.O.)	578
3F *1	Short Circuit Braking (N.C.)	578
40 *1	KEB Ride-Thru 1 Activate (N.C.)	578
41 *1	KEB Ride-Thru 1 Activate (N.O.)	579
42 *1	KEB Ride-Thru 2 Activate (N.C.)	579
43 *1	KEB Ride-Thru 2 Activate (N.O.)	579
44	Field Weakening	579
45	ASR Gain (C5-03) Select	579
46	ASR Integral Reset	580
60	Timer Function	580
61	Motor 2 Selection	580
62	Up Command	580
63	Down Command	582
65	Up 2 Command	583
66	Down 2 Command	584
67	Speed Search from Fmax	584
68	Speed Search from Fref	584
6A	PID Disable	584
71	PID Integrator Reset	585
72	PID Integrator Hold	585

Setting Value	Function	Reference
75	PID Soft Starter Disable	585
76	PID Input (Error) Invert	585
77	PID Setpoint Selection 1	585
78	PID Setpoint Selection 2	585
7A	PID Bi-Directional Enable	585
7B	Fault Reset	586
7C *2	Programming Lockout	586
7D	Overheat Alarm (oH2)	586

Setting Value	Function	Reference
7E	Node Setup (CANopen)	586
7F	Communications Test Mode	586
90 to 96 *1	Q2pack Digital Inputs 1 to 7	586
9F	Q2pack Disable	586
101 to 19F	Inverse Input of 1 to 9F Sets the function of the selected MFDI to operate inversely. To select the function for inverse input, enter two digits 01 to 9F for the “xx” in ”1xx”.	587

*1 Inverse input is not available.
*2 You cannot use *H7-01 to H7-04 [Virtual Multi-Function Input 1 to 4]* to set this.

■ H1-01: DI1 Function Selection

No. (Hex.)	Name	Description	Default (Range)
H1-01 (0438)	DI1 Function Selection	V/f OLV OLV/PM AOLV/PM EZOLV Sets the function for MFDI terminal DI1.	1 (1 - 4, 6 - 19F)

Note:
The default setting is *0* when the drive is initialized for *3-Wire Initialization [A1-03 = 3330]*.

■ H1-02: DI2 Function Selection

No. (Hex.)	Name	Description	Default (Range)
H1-02 (0439)	DI2 Function Selection	V/f OLV OLV/PM AOLV/PM EZOLV Sets the function for MFDI terminal DI2.	2 (1 - 4, 6 - 19F)

Note:
The default setting is *0* when the drive is initialized for *3-Wire Initialization [A1-03 = 3330]*.

■ H1-03: DI3 Function Selection

No. (Hex.)	Name	Description	Default (Range)
H1-03 (0400)	DI3 Function Selection	V/f OLV OLV/PM AOLV/PM EZOLV Sets the function for MFDI terminal DI3.	24 (0 - 19F)

■ H1-04: DI4 Function Selection

No. (Hex.)	Name	Description	Default (Range)
H1-04 (0401)	DI4 Function Selection	V/f OLV OLV/PM AOLV/PM EZOLV Sets the function for MFDI terminal DI4.	7B (0 - 19F)

■ H1-05: DI5 Function Selection

No. (Hex.)	Name	Description	Default (Range)
H1-05 (0402)	DI5 Function Selection	V/f OLV OLV/PM AOLV/PM EZOLV Sets the function for MFDI terminal DI5.	A (0 - 19F)

Note:
When you initialize the drive for *3-Wire Initialization [A1-03 = 3330]*, the default setting is *5*.

■ H1-06: DI6 Function Selection

No. (Hex.)	Name	Description	Default (Range)
H1-06 (0403)	DI6 Function Selection	V/f OLV OLV/PM AOLV/PM EZOLV Sets the function for MFDI terminal DI6.	B (0 - 19F)

Note:
When you initialize the drive for *3-Wire Initialization [A1-03 = 3330]*, the default setting is *A*.

■ H1-07: DI7 Function Selection

No. (Hex.)	Name	Description	Default (Range)
H1-07 (0404)	DI7 Function Selection	V/f OLV OLV/PM AOLV/PM EZOLV Sets the function for MFDI terminal DI7.	6 (0 - 1FF)

Note:
When you initialize the drive for *3-Wire Initialization [A1-03 = 3330]*, the default setting is *B*.

■ H1-21: DI1 Funct.Sel 2

No. (Hex.)	Name	Description	Default (Range)
H1-21 (0B70)	DI1 Funct.Sel 2	V/f OLV OLV/PM AOLV/PM EZOLV Sets the second function for MFDI terminal DI1.	0 (1 - 4, 6 - 19F)

When MFDI terminal DI1 activates, it will operate the function set to *H1-01 [DI1 Function Selection]* and the function set to *H1-21* at the same time.

When the setting value is *0*, the function is disabled.

■ H1-22: DI2 Funct.Sel 2

No. (Hex.)	Name	Description	Default (Range)
H1-22 (0B71)	DI2 Funct.Sel 2	V/f OLV OLV/PM AOLV/PM EZOLV Sets the second function for MFDI terminal DI2.	0 (1 - 4, 6 - 19F)

When MFDI terminal DI2 activates, it will operate the function set to *H1-02 [DI2 Function Selection]* and the function set to *H1-22* at the same time.

When the setting value is *0*, the function is disabled.

■ H1-23: DI3 Funct.Sel 2

No. (Hex.)	Name	Description	Default (Range)
H1-23 (0B72)	DI3 Funct.Sel 2	V/f OLV OLV/PM AOLV/PM EZOLV Sets the second function for MFDI terminal DI3.	0 (1 - 4, 6 - 19F)

When MFDI terminal DI3 activates, it will operate the function set to *H1-03 [DI3 Function Selection]* and the function set to *H1-23* at the same time.

When the setting value is *0*, the function is disabled.

■ H1-24: DI4 Funct.Sel 2

No. (Hex.)	Name	Description	Default (Range)
H1-24 (0B73)	DI4 Funct.Sel 2	V/f OLV OLV/PM AOLV/PM EZOLV Sets the second function for MFDI terminal DI4.	0 (1 - 4, 6 - 19F)

When MFDI terminal DI4 activates, it will operate the function set to *H1-04 [DI4 Function Selection]* and the function set to *H1-24* at the same time.

When the setting value is *0*, the function is disabled.

■ H1-25: DI5 Funct.Sel 2

No. (Hex.)	Name	Description	Default (Range)
H1-25 (0B74)	DI5 Funct.Sel 2	V/f OLV OLV/PM AOLV/PM EZOLV Sets the second function for MFDI terminal DI5.	0 (1 - 4, 6 - 19F)

When MFDI terminal DI5 activates, it will operate the function set to *H1-05 [DI5 Function Selection]* and the function set to *H1-25* at the same time.

When the setting value is *0*, the function is disabled.

■ H1-26: DI6 Funct.Sel 2

No. (Hex.)	Name	Description	Default (Range)
H1-27 (0B76)	DI7 Funct.Sel 2	V/f OLV OLV/PM AOLV/PM EZOLV Sets the second function for MFDI terminal DI7.	0 (1 - 4, 6 - 19F)

When MFDI terminal DI6 activates, it will operate the function set to *H1-06 [DI6 Function Selection]* and the function set to *H1-26* at the same time.

When the setting value is *0*, the function is disabled.

■ H1-27: DI7 Funct.Sel 2

No. (Hex.)	Name	Description	Default (Range)
H1-27 (0B76)	DI7 Funct.Sel 2	V/f OLV OLV/PM AOLV/PM EZOLV Sets the second function for MFDI terminal DI7.	0 (1 - 4, 6 - 19F)

When MFDI terminal DI7 activates, it will operate the function set to *H1-07 [DI7 Function Selection]* and the function set to *H1-27* at the same time.

When the setting value is *0*, the function is disabled.

■ Modbus MFDI 1 to 3 Function Selection

You can set the function for the MFDI to Modbus register *bit 0 to 2* of *[15C0(Hex.)]*. Use *H1-40 to H1-42 [Mbus 15C0h b0 Input Function to Mbus 15C0h b2 Input Function]* to select the function.

Note:
- Refer to *H1: DIGITAL INPUTS on page 566* for more information on the virtual digital input setting values.
- You cannot set values *5 [3-Wire Seq.]* and *20 to 2F [External Fault]* for *H1-40* to *H1-42*.
- When you will not use*H1-40* to *H1-42*, set them to *0 [Through Mode]*.

■ H1-40: Mbus 15C0h b0 Input Function

No. (Hex.)	Name	Description	Default (Range)
H1-40 (0B54)	Mbus 15C0h b0 Input Function	V/f OLV OLV/PM AOLV/PM EZOLV Selects MFDI function assigned to *bit 0* of the Modbus register *15C0 (Hex.)*.	0 (1 - 4, 6 - 19F)

■ H1-41: Mbus 15C0h b1 Input Function

No. (Hex.)	Name	Description	Default (Range)
H1-41 (0B55)	Mbus 15C0h b1 Input Function	V/f OLV OLV/PM AOLV/PM EZOLV Selects MFDI function assigned to *bit 1* of the Modbus register *15C0 (Hex.)*.	0 (1 - 4, 6 - 19F)

■ H1-42: Mbus 15C0h b2 Input Function

No. (Hex.)	Name	Description	Default (Range)
H1-42 (0B56)	Mbus 15C0h b2 Input Function	V/f OLV OLV/PM AOLV/PM EZOLV Selects MFDI function assigned to *bit 2* of the Modbus register *15C0 (Hex.)*.	0 (1 - 4, 6 - 19F)

◆ MFDI Setting Values

Selects a function set with *H1-01 to H1-07*.

■ 0: Through Mode

Setting Value	Function	Description
0	Through Mode	V/f OLV OLV/PM AOLV/PM EZOLV Use this setting for unused terminals or to use terminals in through mode.

Through Mode uses the signal input to the terminal as a digital input for the upper sequence through a communication option or Modbus communications. This input signal does not have an effect on drive operation.

■ 1: Forward Run

Setting Value	Function	Description
1	Forward Run	V/f OLV OLV/PM AOLV/PM EZOLV Sets the Forward Run command for 2-wire sequence 1. Set this function and *H1-xx = 2 [Reverse Run]* at the same time.

ON : Forward Run
OFF : Run Stop

Note:
- Turning ON the Forward Run command terminal and the Reverse Run command terminal will cause alarm *EF [FWD/REV Run Command Input Error]* and the motor will ramp to stop.
- Initialize the drive with a 2-wire sequence to set the Forward Run command to terminal DI1.
- This function will not operate at the same time as *H1-xx = 3, 4 [Run Command, FWD/REV Cmd]*.

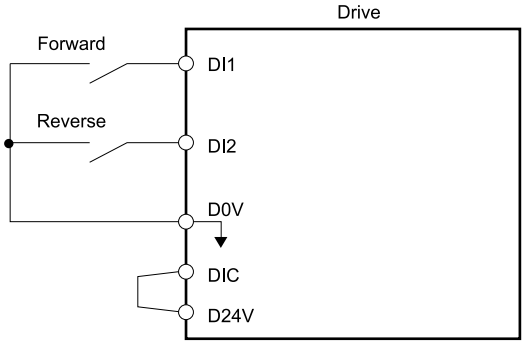

Figure 12.64 2-Wire Sequence Wiring Example

■ 2: Reverse Run

Setting Value	Function	Description
2	Reverse Run	V/f OLV OLV/PM AOLV/PM EZOLV Sets the Forward Run command for 2-wire sequence 1. Set this function and *H1-xx = 1 [Forward Run]* at the same time.

ON : Reverse Run
OFF : Run Stop

Note:
- Turning ON the Forward Run command terminal and the Reverse Run command terminal will cause alarm EF [FWD/REV Run Command Input Error] and the motor will ramp to stop.
- Initialize the drive with a 2-wire sequence to set the Reverse Run command to terminal DI2.
- This function will not operate at the same time as *H1-xx = 3, 4 [Run Command, FWD/REV Cmd]*.

■ 3: Run Command

Setting Value	Function	Description
3	Run Command	V/f OLV OLV/PM AOLV/PM EZOLV Sets the Run command for 2-wire sequence 2. Set this function and *H1-xx = 4 [FWD/REV Cmd]* at the same time.

ON : Run
OFF : Stop

Note:
This function will not operate at the same time as *H1-xx = 1, 2 [Forward Run, Reverse Run]*.

■ 4: FWD/REV Cmd

Setting Value	Function	Description
4	FWD/REV Cmd	V/f OLV OLV/PM AOLV/PM EZOLV Sets the direction of motor rotation for 2-wire sequence 2. Set this function and *H1-xx = 3 [Run Command]* together.

ON : Reverse
OFF : Forward

Note:
- You must input the Run command to rotate the motor.
- This function will not operate at the same time as *H1-xx = 1, 2 [Forward Run, Reverse Run]*.

■ 5: 3-Wire Seq.

Setting Value	Function	Description
5	3-Wire Seq.	V/f OLV OLV/PM AOLV/PM EZOLV Sets the direction of motor rotation for 3-wire sequence.

If the 3-wire sequence is set to a terminal that is not MFDI terminals DI1 and DI2, these terminals will be the input terminals for Forward run/Reverse run command. The drive will automatically set terminal DI1 to Run command (RUN) and terminal DI2 to Stop command (STOP).

When terminal DI1 (Run command) activates for 1 ms minimum, the drive rotates the motor. When terminal DI2 (Stop command) deactivates, the drive stops. When terminal DIx that is set in 3-wire sequence deactivates, the drive operates in the forward direction, and when it activates, the drive operates in the reverse direction.

WARNING! *Sudden Movement Hazard. Set the MFDI parameters before you close control circuit switches. Incorrect Run/Stop circuit sequence settings can cause serious injury or death from moving equipment.*

WARNING! *Sudden Movement Hazard. When you use a 3-Wire sequence, set A1-03 = 3330 [Init Parameters = 3-Wire Initialization] and make sure that b1-17 = 1 [RUN@PowerUp Selection = Disregard RUN] (default). If you do not correctly set the drive parameters for 3-Wire operation before you energize the drive, the motor can suddenly rotate in reverse when you energize the drive.*

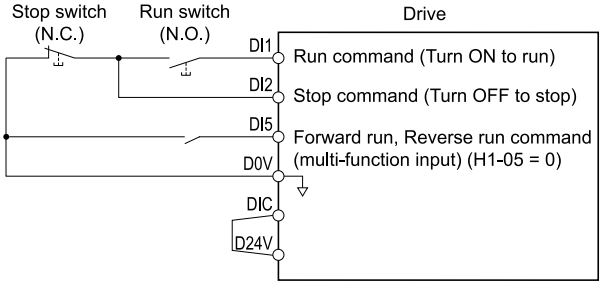

Figure 12.65 3-Wire Sequence Wiring Example

.

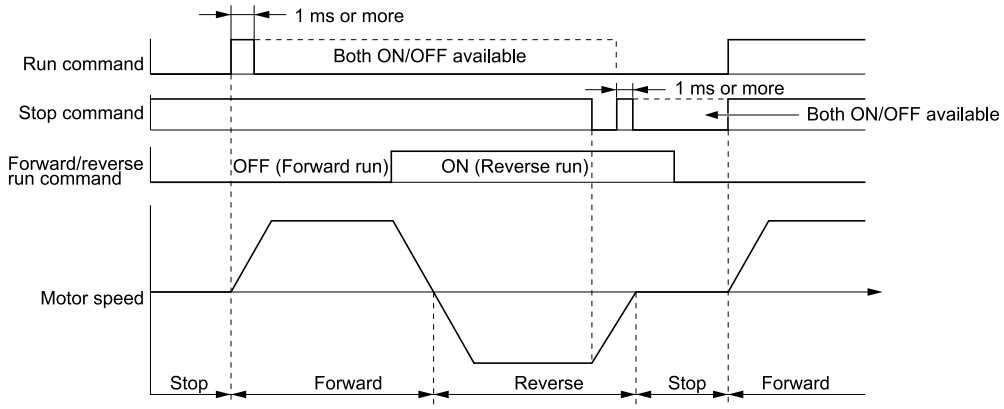

Figure 12.66 3-Wire Sequence Time Chart

Note:
- To input the Run command, activate the terminal for 1 ms minimum.
- The default setting for *b1-17 [RUN@PowerUp Selection]* is *1 [Disregard RUN]*. If you enable the Run command when the drive is energized, the protective function activates and the RUN flashes quickly. When the application allows Run, set *b1-17 = 2 [Accept RUN]*.

■ 6: Jog Reference

Setting Value	Function	Description
6	Jog Reference	V/f OLV OLV/PM AOLV/PM EZOLV Sets the drive to use the JOG Frequency Reference (JOG command) set in *d1-17*. The JOG Frequency Reference (JOG command) overrides Frequency References *1 to 16 (d1-01 to d1-16)*.

■ 7: Jog Forward

Setting Value	Function	Description
7	Jog Forward	V/f OLV OLV/PM AOLV/PM EZOLV Sets the command to operate the motor in the forward direction at the Jog Frequency set in *d1-17 [Jog Reference]*.

Note:
- It is not necessary to input the Run command.
- The Forward JOG command has priority over all other frequency references.
- When the Forward JOG and Reverse JOG commands are activated at the same time for 500 ms or longer, the drive will ramp to stop.

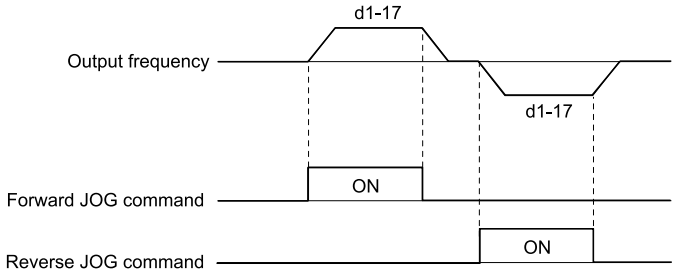

Figure 12.67 JOG Operation Pattern

■ 8: Jog Reverse

Setting Value	Function	Description
8	Jog Reverse	V/f OLV OLV/PM AOLV/PM EZOLV Sets the command to operate the motor in reverse at the Jog Frequency set in *d1-17 [Jog Reference]*.

Note:
- It is not necessary to input the Run command.
- The Reverse JOG command has priority over all other frequency references.
- When the Forward JOG and Reverse JOG commands are activated at the same time for 500 ms or longer, the drive will ramp to stop.

■ 9: Ext Ref 1/2

Setting Value	Function	Description
9	Ext Ref 1/2	V/f OLV OLV/PM AOLV/PM EZOLV Sets the drive to use Run command source 1/2 or Reference command source 1/2 when in REMOTE Mode.

Note:
When the drive is receiving a Run command, you cannot switch between reference sources.

ON : *b1-15 [Freq. Ref. Sel. 2], b1-16 [Run Comm. Sel 2]*
OFF : *b1-01 [Freq. Ref. Sel. 1], b1-02 [Run Comm. Sel 1]*

■ A: MultSpd Ref1

Setting Value	Function	Description
A	MultSpd Ref1	V/f OLV OLV/PM AOLV/PM EZOLV Uses speed references *d1-01 to d1-16* to set a multi-step speed reference.

Note:
Refer to “Setting Procedures for Multi-step Speed Operation” in “*d: REFERENCE on page 508*” for more information.

■ B: MultSpd Ref2

Setting Value	Function	Description
B	MultSpd Ref2	V/f OLV OLV/PM AOLV/PM EZOLV Uses speed references *d1-01 to d1-16* to set a multi-step speed reference.

Note:
Refer to “Setting Procedures for Multi-step Speed Operation” in “*d: REFERENCE on page 508*” for more information.

■ C: MultSpd Ref3

Setting Value	Function	Description
C	MultSpd Ref3	V/f OLV OLV/PM AOLV/PM EZOLV Uses speed references *d1-01 to d1-16* to set a multi-step speed reference.

Note:
Refer to “Setting Procedures for Multi-step Speed Operation” in “*d: REFERENCE on page 508*” for more information.

■ D: MultSpd Ref4

Setting Value	Function	Description
D	MultSpd Ref4	V/f OLV OLV/PM AOLV/PM EZOLV Uses speed references *d1-01 to d1-16* to set a multi-step speed reference.

Note:
Refer to "Setting Procedures for Multi-step Speed Operation” in “*d: REFERENCE on page 508*” for more information.

■ E: Offset Frq 1

Setting Value	Function	Description
E	Offset Frq 1	V/f OLV OLV/PM AOLV/PM EZOLV Sets the function to add the offset frequency set in *d7-01 [Offset Frq 1]* to the frequency reference when the terminal activates.

Note:
Refer to “*d7: OFFSET FREQUENCY on page 522*” for more information.

■ F: Offset Frq 2

Setting Value	Function	Description
F	Offset Frq 2	V/f OLV OLV/PM AOLV/PM EZOLV Sets the function to add the offset frequency set in *d7-02 [Offset Frq 2]* to the frequency reference when the terminal activates.

Note:
Refer to “*d7: OFFSET FREQUENCY on page 522*” for more information.

■ 10: Offset Frq 3

Setting Value	Function	Description
10	Offset Frq 3	V/f OLV OLV/PM AOLV/PM EZOLV Sets the function to add the offset frequency set in *d7-03 [Offset Frq 3]* to the frequency reference when the terminal activates.

Note:
Refer to “*d7: OFFSET FREQUENCY on page 522*” for more information.

■ 11: LOC/REM Sel.

Setting Value	Function	Description
11	LOC/REM Sel.	V/f OLV OLV/PM AOLV/PM EZOLV Sets drive control for the keypad (LOCAL) or an external source (REMOTE).

Note:
- When the MFDI terminal sets the LOCAL/REMOTE selection, LO/RE on the keypad is disabled.
- When LOCAL Mode is selected, the green light for

comes on.
- When the Run command is ON, you cannot switch between LOCAL Mode and REMOTE Mode.

ON : LOCAL
The keypad is the Frequency reference source and Run command source.

OFF : REMOTE
Parameters *b1-01, b1-02 [Freq. Ref. Sel. 1, Run Comm. Sel 1]* or *b1-15, b1-16 [Freq. Ref. Sel. 2, Run Comm. Sel 2]* set the frequency reference and Run command.

■ 12: AI Input Sel

Setting Value	Function	Description
12	AI Input Sel	V/f OLV OLV/PM AOLV/PM EZOLV Sets the command that enables or disables the terminals selected in *H3-14 [An.In Term.Enable Sel]*.

ON : Terminal selected with *H3-14* is enabled

OFF : Terminal selected with *H3-14* is disabled

■ 15: FWD/REV Det

Setting Value	Function	Description
15	FWD/REV Det	V/f OLV OLV/PM AOLV/PM EZOLV Set the motor rotation direction when you use Simple Closed Loop V/f Control method.

ON : Reverse run

The drive knows that the motor is rotating in the reverse direction.

OFF : Forward run

The drive knows that the motor is rotating in the forward direction.

■ 16: Ref Sample

Setting Value	Function	Description
16	Ref Sample	V/f OLV OLV/PM AOLV/PM EZOLV Sets the command to sample the frequency reference at terminal AI1 or AI2, and hold the frequency reference at that frequency.

When the terminal is active for 100 ms, this function reads a sample of the analog frequency reference and holds that sample. When you input the sample/hold command again, the function again reads a sample of the analog frequency reference and holds that sample. When you turn off the power, the drive erases the saved analog frequency and resets the frequency reference to 0.

Figure 12.68 shows an example of how the function operates.

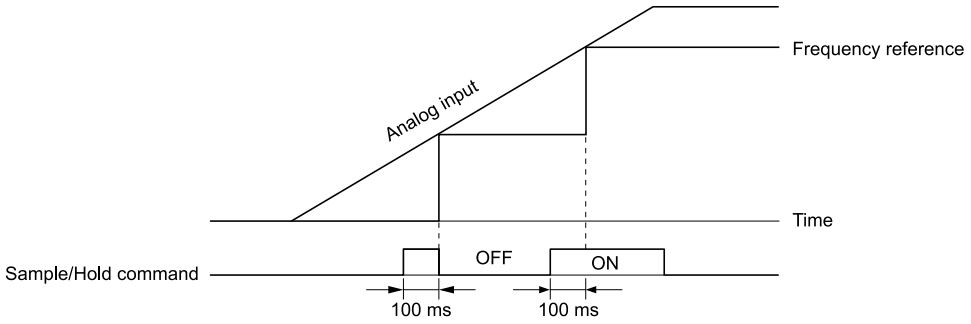

Figure 12.68 Reference Sample Hold

You cannot set the Reference Sample Hold function at the same time as these functions:

- *H1-xx = 17 [Ac/Dec Hold]*
- *H1-xx = 62, 63 [Up Command, Down Command]*
- *H1-xx = E to 10 [Offset Frq 1 to Offset Frq 3]*
- *H1-xx = 65, 66 [Up2 Command, Dw2 Command]*

If you set them at the same time, the drive will detect *oPE03 [Multi-Function Input Setting Err]*.

■ 17: Ac/Dec Hold

Setting Value	Function	Description
17	Ac/Dec Hold	V/f OLV OLV/PM AOLV/PM EZOLV Momentarily pauses motor acceleration and deceleration when the terminal is turned ON, retains the output frequency that was stored in the drive at the time of the pause, and restarts motor operation.

If the terminal is deactivated, the drive restarts acceleration and deceleration.

When the acceleration/deceleration ramp hold terminal is activated and *d4-01 = 1 [FRef Hold Selection = Enabled]*, the drive will store the output frequency in memory. While the acceleration/deceleration ramp hold command is activated, the drive will always restart the motor at this output frequency.

Note:
Refer to "*d4: FREQUENCY UP/DOWN on page 516*" for more information.

■ 18: Ac/Dec Time1

Setting Value	Function	Description
18	Ac/Dec Time1	V/f OLV OLV/PM AOLV/PM EZOLV Sets the drive to use *Acceleration/Deceleration Time 1 [C1-01, C1-02]* or *Acceleration/Deceleration Time 2 [C1-03, C1-04]*.

Note:
Refer to "*C1: ACCEL / DECEL on page 488*" for more information.

■ 19: Ac/Dec Time2

Setting Value	Function	Description
19	Ac/Dec Time2	V/f OLV OLV/PM AOLV/PM EZOLV Set this function and *H1-xx = 18 [Ac/Dec Time1]* together. Sets the drive to use *Acceleration/Deceleration Time 3 [C1-05, C1-06]* or *Acceleration/Deceleration Time 4 [C1-07, C1-08]*.

Note:
Refer to "*C1: ACCEL / DECEL on page 488*" for more information.

■ 1A: Drive Enable

Setting Value	Function	Description
1A	Drive Enable	V/f OLV OLV/PM AOLV/PM EZOLV Sets the function to show *dnE [Drive Enabled]* on the keypad and ignore Run commands when the terminal is OFF.

If you input the Run command before you turn ON the Drive Enable terminal, you must input the Run command again to operate the drive. When the terminal set for Drive Enable is turned OFF when the drive is operating, the drive will use the stopping method set in *b1-03 [Stopping Method Selection]* to stop the motor.

ON : Run command is accepted.

OFF : Run command is disabled. When the drive is running, it stops according to *b1-03* setting.

■ 1B: Baseblock NO

Setting Value	Function	Description
1B	Baseblock NO	V/f OLV OLV/PM AOLV/PM EZOLV Sets the command that stops drive output and coasts the motor to stop when the input is ON.

The keypad flashes *bb [Baseblock]*. If you cancel the baseblock command when the Run command is active, the drive will restart the motor and use the speed search function.

WARNING! *Sudden Movement Hazard. When you use a mechanical holding brake with the drive in a lifting application, you must close the brake if an input terminal triggers the Baseblock command to stop drive output. If you enter the baseblock command, the motor will suddenly coast and the load will slip, which can cause serious injury or death.*

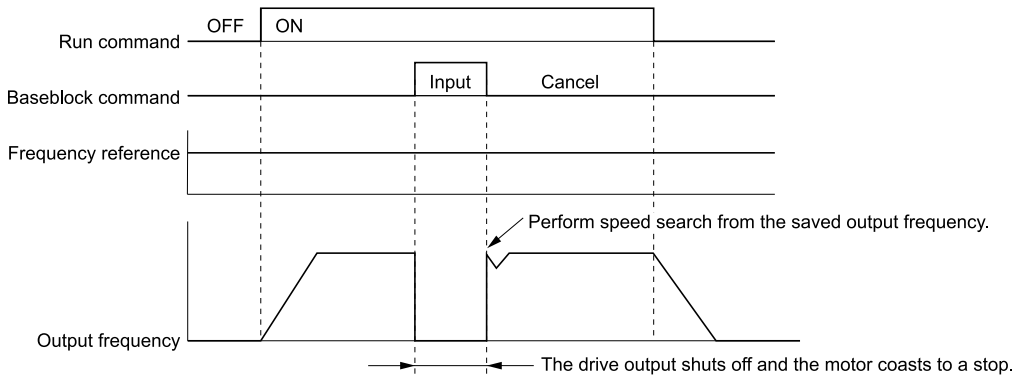

Figure 12.69 Baseblock Command Time Chart

ON : Baseblock (drive output stop)

OFF : Normal operation

■ 1E: Baseblock NC

Setting Value	Function	Description
1E	Baseblock NC	V/f OLV OLV/PM AOLV/PM EZOLV Sets the command that stops drive output and coasts the motor to stop when the input terminal is OFF.

The keypad flashes *bb [Baseblock]*. If you cancel the baseblock command when the Run command is active, the drive will restart the motor and use the speed search function.

ON : Normal operation

OFF : Baseblock (drive output stop)

WARNING! *Sudden Movement Hazard. When you use a mechanical holding brake with the drive in a lifting application, you must close the brake if an input terminal triggers the Baseblock command to stop drive output. If you enter the baseblock command, the motor will suddenly coast and the load will slip, which can cause serious injury or death.*

■ 20 to 2F: External Fault

Setting Value	Function	Description
20 to 2F	External Fault	V/f OLV OLV/PM AOLV/PM EZOLV Sets a command to stop the drive when a failure or fault occurs on an external device.

If an external fault is input to the drive, the keypad will show *EFx [External Fault (Terminal Dx)]*, where x is the number of the terminal (terminal DIx) to which the external fault signal is assigned. For example, when an external fault signal is input to terminal DI3, the keypad will show EF3.

Use these conditions to select the value to set in *H1-xx*:

- Signal input method from peripheral devices
- External fault detection method
- Motor stopping method (operation after external fault detection)

Table 12.39 shows the relation between the conditions and the value set to *H1-xx*.

Table 12.39 Stopping Methods for External Fault

Setting	Signal Input Method from Peripheral Devices *1		External Fault Detection Method *2		Stopping Method			
	N.O.	N.C.	Always Detected	Detected during RUN Only	Ramp to Stop (Fault)	Coast to Stop (Fault)	Fast Stop (Fault)	Continuous Operation (Alarm Only)
20	x	-	x	-	x	-	-	-
21	-	x	x	-	x	-	-	-
22	x	-	-	x	x	-	-	-
23	-	x	-	x	x	-	-	-
24	x	-	x	-	-	x	-	-
25	-	x	x	-	-	x	-	-
26	x	-	-	x	-	x	-	-
27	-	x	-	x	-	x	-	-
28	x	-	x	-	-	-	x	-
29	-	x	x	-	-	-	x	-
2A	x	-	-	x	-	-	x	-
2B	-	x	-	x	-	-	x	-
2C	x	-	x	-	-	-	-	x
2D	-	x	x	-	-	-	-	x
2E	x	-	-	x	-	-	-	x
2F	-	x	-	x	-	-	-	x

*1 Set the terminal to N.O. (detects external fault when switched ON) or N.C. (detects external fault when switched OFF).
*2 Set the drive to always detect each fault or to detect only during run.

■ 30: DCInj Cmd

Setting Value	Function	Description
30	DCInj Cmd	V/f OLV OLV/PM AOLV/PM EZOLV Sets the command to use DC Injection Braking to stop the motor.

If you input the Run command or JOG command, it will cancel DC Injection Braking.
Figure 12.70 shows the time chart of the DC Injection Braking function.

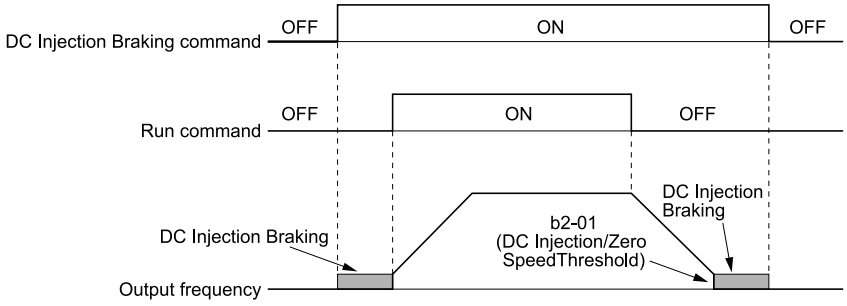

Figure 12.70 DC Injection Braking Time Chart

Note:
- When *A1-02 = 8 [Control Method = EZ Vector]*, this function is available only when you use a PM motor.
- Refer to "*b2: DC INJ / SHORT CKT BRAKE on page 454*" for more information.

■ 32: HiSlipBraking

Setting Value	Function	Description
32	HiSlipBraking	V/f OLV OLV/PM AOLV/PM EZOLV Sets the command to use high-slip braking to stop the motor.

Note:
- When you restart the drive after you use high-slip braking, make sure that the drive fully stops the motor then clear the high-slip braking input.
- Refer to "*n3: HIGHSLIP/OVEREXCITATION BRAKE on page 678*" for more information.

■ 34: Fast Stop NO

Setting Value	Function	Description
34	Fast Stop NO	V/f OLV OLV/PM AOLV/PM EZOLV Sets the command to ramp to stop in the deceleration time set in *C1-09 [Fast Stop Time]* when the input terminal is activated while the drive is operating.

If you cancel the fast stop input, the drive will not restart the motor until you meet these conditions:
- Fully stop the motor
- Cancel the Run command
- Cancel the fast stop command

Note:
- To use the N.C. switch to input the fast stop command, set 35 [Fast Stop NC].
- For details, refer to *C1-09: Fast Stop Time on page 491*.
- Set *C1-09 [Fast Stop Time]* to a correct deceleration time. If the deceleration time is too short, it can cause an overvoltage fault and failure to stop the motor from coasting.

■ 35: Fast Stop NC

Setting Value	Function	Description
35	Fast Stop NC	V/f OLV OLV/PM AOLV/PM EZOLV Sets the command to ramp to stop in the deceleration time set in *C1-09 [Fast Stop Time]* when the input terminal is activated while the drive is operating.

If you cancel the fast stop input, the drive will not restart the motor until you meet these conditions:
- Fully stop the motor
- Cancel the Run command
- Cancel the fast stop command

Note:
- To use the N.O. switch to input the fast stop command, set 34 [Fast Stop NO].
- For details, refer to *C1-09: Fast Stop Time on page 491*.
- Set *C1-09 [Fast Stop Time]* to a correct deceleration time. If the deceleration time is too short, it can cause an overvoltage fault and failure to stop the motor from coasting.

Figure 12.71 shows an example of how fast stop operates.

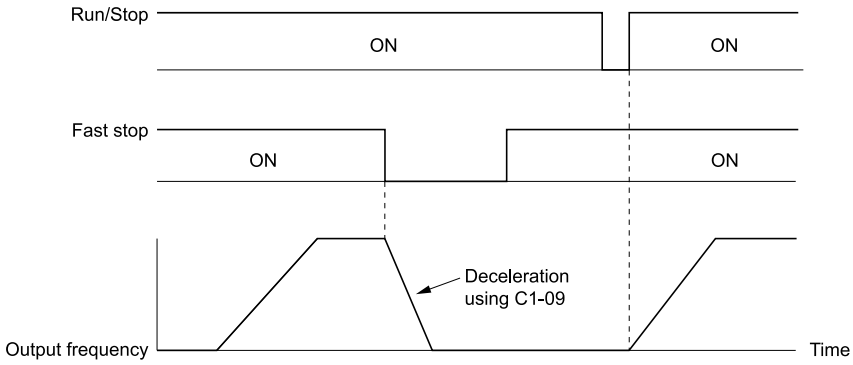

Figure 12.71 Fast Stop Time Chart

■ 3E: SCBraking NO

Setting Value	Function	Description
3E	SCBraking NO	V/f OLV OLV/PM AOLV/PM EZOLV Sets operation of Short Circuit Braking (N.O.).

The drive will short circuit the three phases of a PM motor to cause braking torque in the spinning motor.

Note:
- When *A1-02 = 8 [Control Method = EZ Vector]*, this function is available only when you use a PM motor.
- Refer to "*b2: DC INJ / SHORT CKT BRAKE on page 454*" for more information.

ON : Short Circuit Braking is enabled.

OFF : Normal operation

■ 3F: SCBraking NC

Setting Value	Function	Description
3F	SCBraking NC	V/f OLV OLV/PM AOLV/PM EZOLV Sets operation of Short Circuit Braking (N.C.).

The drive will short circuit the three phases of a PM motor to cause braking torque in the spinning motor.

Note:
- When *A1-02 = 8 [Control Method = EZ Vector]*, this function is available only when you use a PM motor.
- Refer to "*b2: DC INJ / SHORT CKT BRAKE on page 454*" for more information.

ON : Normal operation

OFF : Short Circuit Braking is enabled.

■ 40: KEB Thru1 NC

Setting Value	Function	Description
40	KEB Thru1 NC	V/f OLV OLV/PM AOLV/PM EZOLV Sets operation of the KEB1 function through the KEB Ride-Thru 1 (N.C.).

ON : Normal operation

OFF : Deceleration during momentary power loss

When you enable KEB Ride-Thru 1, set *L2-29 [KEB Method]*. The drive operates with the selected KEB method.

Note:
- If you set *KEB Ride-Thru 1 [H1-xx = 40, 41]* and *KEB Ride-Thru 2 [H1-xx = 42, 43]* at the same time, the drive will detect *oPE03 [Multi-Function Input Setting Err]*.
- Refer to "*KEB Ride-Thru Function on page 638*" for more information.

■ 41: KEB Thru1 NO

Setting Value	Function	Description
41	KEB Thru1 NO	V/f OLV OLV/PM AOLV/PM EZOLV Sets operation of the KEB1 function through the KEB Ride-Thru 1 (N.O.).

ON : Deceleration during momentary power loss

OFF : Normal operation

When you enable KEB Ride-Thru 1, set *L2-29 [KEB Method]*. The drive operates with the selected KEB method.

Note:
- If you set *KEB Ride-Thru 1 [H1-xx = 40, 41]* and *KEB Ride-Thru 2 [H1-xx = 42, 43]* at the same time, the drive will detect *oPE03 [Multi-Function Input Setting Err]*.
- Refer to "*KEB Ride-Thru Function on page 638*" for more information.

■ 42: KEB Thru2 NC

Setting Value	Function	Description
42	KEB Thru2 NC	V/f OLV OLV/PM AOLV/PM EZOLV Sets operation of the KEB2 function through the KEB Ride-Thru 2 (N.C.).

ON : Normal operation

OFF : Deceleration during momentary power loss

When KEB Ride-Thru 2 is input, the drive will use Single Drive KEB Ride-Thru 2 for KEB operation. The *L2-29 [KEB Method]* setting will not have an effect.

Note:
- If you set *KEB Ride-Thru 1 [H1-xx = 40, 41]* and *KEB Ride-Thru 2 [H1-xx = 42, 43]* at the same time, the drive will detect *oPE03 [Multi-Function Input Setting Err]*.
- Refer to "*KEB Ride-Thru Function on page 638*" for more information.

■ 43: KEB Thru2 NO

Setting Value	Function	Description
43	KEB Thru2 NO	V/f OLV OLV/PM AOLV/PM EZOLV Sets operation of the KEB2 function through the KEB Ride-Thru 2 (N.O.).

ON : Deceleration during momentary power loss

OFF : Normal operation

When KEB Ride-Thru 2 is input, the drive will use Single Drive KEB Ride-Thru 2 for KEB operation. The *L2-29 [KEB Method]* setting will not have an effect.

Note:
- If you set *KEB Ride-Thru 1 [H1-xx = 40, 41]* and *KEB Ride-Thru 2 [H1-xx = 42, 43]* at the same time, the drive will detect *oPE03 [Multi-Function Input Setting Err]*.
- Refer to "*KEB Ride-Thru Function on page 638*" for more information.

■ 44: Field weakening

Setting Value	Function	Description
44	Field weakening	V/f OLV OLV/PM AOLV/PM EZOLV Sets the function to send the Field Weakening Level and Field Weakening Frequency Limit commands set in *d6-01[Field Weak Level] and d6-02 [Field Weak FqLimit]* when the input terminal is activated.

Note:

Refer to "*d6: FIELD WEAKENING / FORCING on page 522*" for more information.

■ 45: ASR Gain Switch

Setting Value	Function	Description
45	ASR Gain Switch	V/f OLV OLV/PM AOLV/PM EZOLV Sets the function to switch the ASR proportional gain set in *C5-01 [ASR PGain 1]* and *C5-03 [ASR PGain 2]*.

ON : C5-03

Switches the proportional gain to *C5-03 [ASR PGain 2]*.

OFF : C5-01

Switches the proportional gain to *C5-01 [ASR PGain 1]*.

Note:
Refer to "*C5: ASR - SPEED REGULATION on page 499*" for more information.

■ 46: ASR I Reset

Setting Value	Function	Description
46	ASR I Reset	V/f OLV OLV/PM AOLV/PM EZOLV Sets the command to reset the integral value and use PI control or P control for the speed control loop.

ON : P control
OFF : PI control

■ 60: Timer Fn Input

Setting Value	Function	Description
60	Timer Fn Input	V/f OLV OLV/PM AOLV/PM EZOLV Sets the command to start the timer function. Use this setting with *Timer Output [H2-xx = 39]*.

Note:
Refer to "*b4: TIMER on page 464*" for more information.

■ 61: Motor 2 Select

Setting Value	Function	Description
61	Motor 2 Select	V/f OLV OLV/PM AOLV/PM EZOLV Sets the command for the drive to operate motor 1 or motor 2. Stop the motors before switching.

You can use an external input to switch operation between two induction motors. The drive will save the control methods, V/f patterns, and motor parameters for the two motors.

ON : Operate motor 2
OFF : Operate motor 1

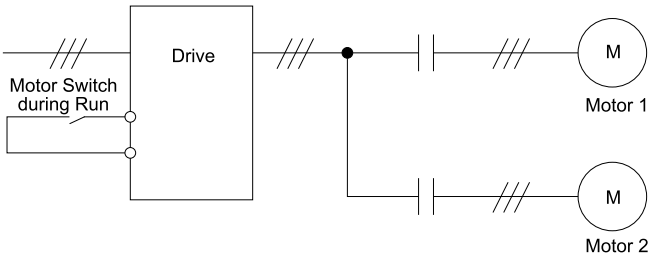

When you select motor 2, the drive will switch to motor 2 parameters.

Table 12.40 Parameters that Switch between Motor 1 and Motor 2

Parameter	Motor 2 Selection	
	OFF (Motor 1)	ON (Motor 2)
C1: ACCEL / DECEL	C1-01 to C1-04	C1-05 to C1-08
C3: SLIP COMPENSATION	C3-01 to C3-04	C3-21 to C3-24
C4: TORQUE COMPENSATION	C4-01	C4-07
C5: ASR - SPEED REGULATION	C5-01 to C5-08, C5-12	-
E1: V/F PARAMETER MOTOR 1, E2: MOTOR 1 PARAMETERS, E3: V/F PARAMETER MOTOR 2, E4: MOTOR 2 PARAMETERS	E1-xx, E2-xx	E3-xx, E4-xx

Note:
- When you use 2 motors, the drive applies the protective function set in *L1-01 [Motor Cool Type for OL1 Calc]* to motor 1 and motor 2.
- You cannot switch between motors 1 and 2 during run. If you try to switch motors when they are running, it will cause a *rUn* error.
- You must wait 200 ms minimum to input a Run command.

■ 62: Up Command

Setting Value	Function	Description
62	Up Command	V/f OLV OLV/PM AOLV/PM EZOLV Sets the command to use a push button switch to increase the drive frequency reference. You must also set *Setting 63 [Down Command]*.

ON : Increases the frequency reference.

OFF : Holds the current frequency reference.

Note:

- If you set only the Up command or only the Down command, the drive will detect *oPE03 [Multi-Function Input Setting Err]*.
- If you set two or more of these functions at the same time, the drive will detect *oPE03*:
  - Up/Down command
  - Accel/Decel Ramp Hold
  - Reference Sample Hold
  - Offset Frequency 1, 2, 3 addition
  - Up/Down 2 Command
- The Up/Down command does not function in these conditions:
  - *b1-01 = 2, 3 [Freq. Ref. Sel. 1 = Modbus, Option PCB]*
  - *b1-02 ≠ 1 [Run Comm. Sel 1 ≠ Digital Input]*
  - Drive is in LOCAL mode
  - Set to *b1-15 [Freq. Ref. Sel. 2]* by use of *H1-xx = 9 [MFDI Function Select = Ext Ref 1/2]*

When you enter the UP command, the frequency reference increases. When you enter the Down command, the frequency reference decreases.

The Up and Down commands have priority over all other frequency references. When you enable the Up/Down command, the drive will ignore these frequency references:

- Frequency reference from Keypad *[b1-01 = 0]*
- Frequency reference from Analog Input *[b1-01 = 1]*
- Frequency reference from Pulse Train Input *[b1-01 = 4]*

Table 12.41 shows the Up and Down commands with their operation.

Table 12.41 Up Command and Down Command

Command status		Drive operation
Up Command (62)	Down Command (63)	
OFF	OFF	Keeps the current frequency reference.
ON	OFF	Increases the frequency reference.
OFF	ON	Decreases the frequency reference.
ON	ON	Keeps the current frequency reference.

Combine Frequency Reference Hold Functions and Up/Down Commands

- When you clear the Run command or when *d4-01 = 0 [Freq Reference Hold Selection = Disabled]*, and you restart the drive, the Up/Down command resets to 0.
- When *d4-01 = 1 [Enabled]*, the drive saves the frequency reference set during the Up/Down command. When you cycle the Run command or restart the drive, the drive saves the frequency reference value and restarts the motor at this frequency value. After you clear the Run command, activate the terminal set for the Up command or Down command to set the saved reference value to 0.

Note:

Refer to “d4-01 [Freq Reference Hold Selection]” for more information.

Combine Upper/Lower Limits of the Frequency Reference and the Up/Down Commands

Set the upper limit value of the frequency reference to *d2-01 [Frequency Reference Upper Limit]*.

Use an analog input or *d2-02 [Frequency Reference Lower Limit]* to set the lower limit value of the frequency reference. The configurable values change when the setting for *d4-10 [Up/Down Freq Lower Limit Select]* changes. When you input a Run command, these are the lower limits of the frequency reference:

- When the lower limit of the frequency reference is set only for *d2-02*, the drive accelerates the motor to the lower limit value of the frequency reference when you input the Run command.
- When the lower limit of the frequency reference is set only for analog input, the drive accelerates the motor to the lower limit value of the frequency reference when the Run command, and Up command or Down command for the drive is enabled. When only the Run command is enabled, the motor does not start.
- When these conditions occur, the drive accelerates the motor to the *d2-02* setting value when the Run command is input. When the motor accelerates to the setting value of *d2-02*, the motor accelerates to the lower limit value of the analog input when you enable the Up/Down command.
  - The lower limit value of the frequency reference is set for the analog input and *d2-02*
  - The lower limit value of the analog input is higher than the setting value of *d2-02*

Note:
Refer to “d4-10: Up/Down Freq Lower Limit Select” for details.

Figure 12.72 shows an example of how Up/Down command operates. In this example, the lower limit value of the frequency reference is set in *d2-02*. Figure 12.72 shows the time chart when Freq Reference *Retention Select [d4-01]* is enabled and disabled.

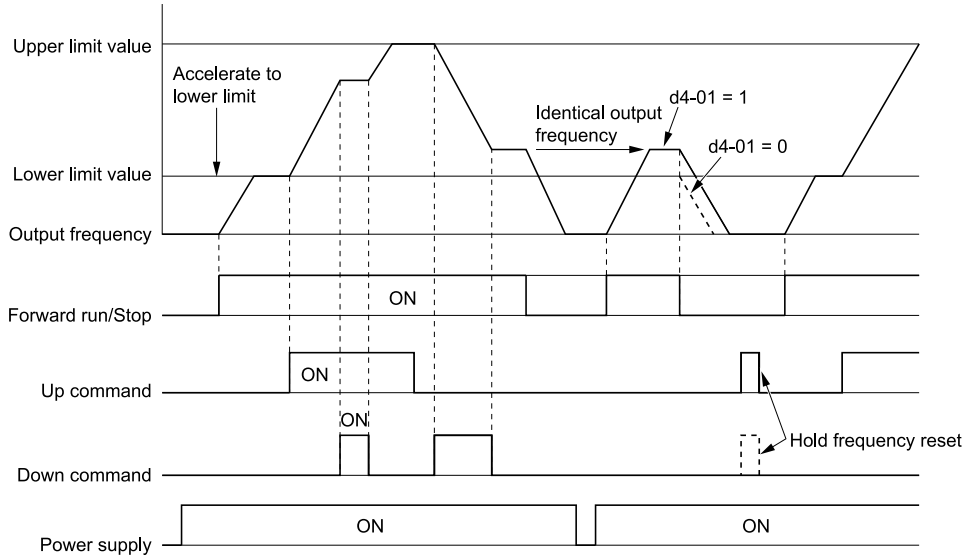

Figure 12.72 Up/Down Command Time Chart

■ 63: Down Command

Setting Value	Function	Description
63	Down Command	V/f OLV OLV/PM AOLV/PM EZOLV Sets the command to use a push button switch to decrease the drive frequency reference. You must also set *Setting 62 [Up Command]*.

ON : Decreases the frequency reference.

OFF : Holds the current frequency reference.

Note:
- If you set only the Up command or only the Down command, the drive will detect *oPE03 [Multi-Function Input Setting Err]*.
- If you set two or more of these functions at the same time, the drive will detect *oPE03*:
  - –Up/Down command
  - –Accel/Decel Ramp Hold
  - –Reference Sample Hold
  - –Offset Frequency 1, 2, 3 addition
  - –Up/Down 2 Command
- The Up/Down command does not function in these conditions:
  - –*b1-01 = 2, 3 [Freq. Ref. Sel. 1 = Modbus, Option PCB]*
  - –*b1-02 ≠ 1 [Run Comm. Sel 1 ≠ Digital Input]*
  - –Drive is in LOCAL mode
  - –Set to *b1-15 [Freq. Ref. Sel. 2]* by use of *H1-xx = 9 [MFDI Function Select = Ext Ref 1/2]*

When you enter the UP command, the frequency reference increases. When you enter the Down command, the frequency reference decreases.

The Up and Down commands have priority over all other frequency references. When you enable the Up/Down command, the drive will ignore these frequency references:

- Frequency reference from Keypad *[b1-01 = 0]*
- Frequency reference from Analog Input *[b1-01 = 1]*
- Frequency reference from Pulse Train Input *[b1-01 = 4]*

■ 65: Up2 Command

Setting Value	Function	Description
65	Up2 Command	V/f OLV OLV/PM AOLV/PM EZOLV Sets the function to increase the frequency reference bias value to accelerate the motor when the terminal is activated. Set this function and *H1-xx = 66 [Dw2 Command]* together.

When you activate the terminal set for Up2 Command, the bias will increase. When you activate the terminal set for Down 2 Command, the bias will decrease. When you activate or deactivate the two commands, the drive will hold the frequency reference. Table 12.42 gives information about the relation between operation of the Up/Down 2 Command and *d4-01, d4-03, d4-05*.

Note:
- When using this function, set the optimal bias limit value with *d4-08 and d4-09 [Up/Dw2 Bias Upper Limit and Up/Dw2 Bias Lower Limit]*.
- Refer to "*d4: FREQUENCY UP/DOWN on page 516*" for more information.

Table 12.42 Up 2 Command, Down 2 Command

Function	Frequency Reference Source	d4-03	d4-05	d4-01	Operation	Storing the Frequency Reference or Frequency Bias
1	Multi-step speed reference	0.00	0	0	• When the Up 2 Command is active, the drive accelerates the motor (increases the bias value). • When the Down 2 Command is active, the drive decelerates the motor (decreases the bias value) • When the Up 2 Command and Down 2 Command are not active and when the Up 2 Command and Down 2 Command are active, the drive holds the output frequency (holds the bias value). • When the frequency changes, it will reset the bias. • For all other statuses, the drive will follow the frequency reference.	Not stored.
2				1		When the bias value and frequency reference are constant for 5 seconds after the frequency reference hold starts, the drive will add the bias value to the enabled frequency reference, then reset.
3			1	-	• When the Up 2 Command is active, the drive accelerates the motor. • When the Down 2 Command is active, the drive decelerates the motor. • For all other statuses, the drive will follow the frequency reference.	Not stored.
4	Multi-step speed reference	> 0	-	0	• When the Up 2 Command is active, the drive accelerates the motor to "Frequency Reference + *d4-03*" (the bias value will increase to the value set in *d4-03*) • When the Down 2 Command is active, the drive decelerates the motor to "Frequency Reference - *d4-03*" (the bias value will decrease to the value set in *d4-03*). • When the Up 2 Command and Down 2 Command are not active and when the Up 2 Command and Down 2 Command are active, the drive holds the output frequency (holds the bias value). • When the frequency changes, it will reset the bias. • For all other statuses, the drive will follow the frequency reference.	Not stored.
5				1		When the bias value and frequency reference are constant for 5 seconds after the frequency reference hold starts, the drive will add the bias value to the enabled frequency reference, then reset.
6	Others (Analog input, transmission)	0	0	0	• When the Up 2 Command is active, the drive accelerates the motor (increases the bias value). • When the Down 2 Command is active, the drive decelerates the motor (decreases the bias value) • When the Up 2 Command and Down 2 Command are not active and when the Up 2 Command and Down 2 Command are active, the drive holds the output frequency (holds the bias value). • During acceleration or deceleration, when the frequency reference increases or decreases more than *d4-07*, the drive holds the bias value until the output frequency and the actual frequency reference agree (speed agreement).	Not stored.
7				1		When the bias value is constant for 5 seconds after the frequency reference hold starts, the drive will store the bias value in *d4-06*. You cannot rewrite the frequency reference is not possible. The drive will store only the bias value.

Function	Frequency Reference Source	d4-03	d4-05	d4-01	Operation	Storing the Frequency Reference or Frequency Bias
8	Others (Analog input, transmission)	0	1	-	• When the Up 2 Command is active, the drive accelerates the motor (increases the bias value). • When the Down 2 Command is active, the drive decelerates the motor (decreases the bias value) • For all other statuses, the drive will follow the frequency reference.	Not stored.
9		> 0	-	0	• When the Up 2 Command is active, the drive accelerates the motor to "Frequency Reference + *d4-03*" (the bias value will increase to the value set in *d4-03*) • When the Down 2 Command is active, the drive decelerates the motor to "Frequency Reference - *d4-03*" (the bias value will decrease to the value set in *d4-03*). • During acceleration or deceleration, when the frequency reference increases or decreases more than *d4-07*, the drive holds the bias value until the output frequency and the actual frequency reference agree (speed agreement).	Not stored.
10				1		When the bias value is constant for 5 seconds after the frequency reference hold starts, the drive will store the bias value in *d4-06*. You cannot rewrite the frequency reference is not possible. The drive will store only the bias value.

■ 66: Dw2 Command

Setting Value	Function	Description
66	Dw2 Command	V/f OLV OLV/PM AOLV/PM EZOLV Sets the function to decrease the frequency reference bias value to decelerate the motor when the terminal is activated. Set this function and *H1-xx = 65 [Up2 Command]* at the same time.

When you activate the terminal set for Up2 Command, the bias will increase. When you activate the terminal set for Down 2 Command, the bias will decrease. When you activate or deactivate the two commands, the drive will hold the frequency reference.

Note:
- When using this function, set the optimal bias limit value with *d4-08 and d4-09 [Up/Dw2 Bias Upper Limit and Up/Dw2 Bias Lower Limit]*.
- Refer to "*d4: FREQUENCY UP/DOWN on page 516*" for more information.

■ 67: SpdSrch Fmax

Setting Value	Function	Description
67	SpdSrch Fmax	V/f OLV OLV/PM AOLV/PM EZOLV Sets the function to start speed search using an external reference although *b3-01 = 0 [SpSrch@Start Selection = Disabled]*.

When the terminal is turned ON for *b3-24 = 2 [SpSrch Method Selection = Current Det2]*, the drive starts speed search from the maximum output frequency.

Note:
- The drive will detect *oPE03 [Multi-Function Input Setting Err]* when *H1-xx = 67 and 68* are set at the same time.
- Refer to "*b3: SPEED SEARCH on page 456*" for more information.

■ 68: SpdSrch Fref

Setting Value	Function	Description
68	SpdSrch Fref	V/f OLV OLV/PM AOLV/PM EZOLV Sets the function to start speed search using an external reference although *b3-01 = 0 [SpSrch@Start Selection = Disabled]*.

When the terminal is turned ON for *b3-24 = 2 [SpSrch Method Selection = Current Det2]*, the drive starts speed search from the frequency reference.

Note:
- The drive will detect *oPE03 [Multi-Function Input Setting Err]* when *H1-xx = 67 and 68* are set at the same time.
- Refer to "*b3: SPEED SEARCH on page 456*" for more information.

■ 6A: PID Disable

Setting Value	Function	Description
6A	PID Disable	V/f OLV OLV/PM AOLV/PM EZOLV Sets the command to disable PID control when *b5-01 = 1 [PID Enable = Enabled]*.

ON : PID control disabled

OFF : PID control enabled

■ 71: PID I Reset

Setting Value	Function	Description
71	PID I Reset	V/f OLV OLV/PM AOLV/PM EZOLV Sets the command to reset and hold the PID control integral to 0 when the terminal is ON.

Note:
Refer to "*b5: PID CONTROL on page 466*" for more information.

■ 72: PID I Hold

Setting Value	Function	Description
72	PID I Hold	V/f OLV OLV/PM AOLV/PM EZOLV Sets the command to hold the integral value of the PID control while the terminal is activated.

When you turn off the input terminal, PID control restarts the integral.

Note:
Refer to "*b5: PID CONTROL on page 466*" for more information.

■ 75: PID SS Cancel

Setting Value	Function	Description
75	PID SS Cancel	V/f OLV OLV/PM AOLV/PM EZOLV Sets the PID soft starter function.

ON : No
Disables *b5-17 [PID Accel/Decel Time]*.

OFF : Yes
Enables *b5-17 [PID Accel/Decel Time]*.

Note:
Refer to "*b5: PID CONTROL on page 466*" for more information.

■ 76: PID InLv Select

Setting Value	Function	Description
76	PID InLv Select	V/f OLV OLV/PM AOLV/PM EZOLV Sets the command to turn the terminal ON and OFF to switch the PID input level (polarity).

Note:
Refer to "*b5: PID CONTROL on page 466*" for more information.

■ 77: PID SP 1

Setting Value	Function	Description
77	PID SP 1	V/f OLV OLV/PM AOLV/PM EZOLV Set this function and *H1-xx = 78 [PID SP 2]* together. Sets the function to switch the PID setpoint to *b5-58 to b5-60 [PID Setpoints 2 to 4]*.

Refer to "*b5-58 to b5-60: PID Setpoints 2 to 4 on page 479*" for more information.

■ 78: PID SP 1

Setting Value	Function	Description
78	PID SP 1	V/f OLV OLV/PM AOLV/PM EZOLV Set this function and *H1-xx = 77 [PID SP 1]* at the same time. Sets the function to switch the PID setpoint to *b5-58 to b5-60 [PID Setpoints 2 to 4]*.

Refer to "*b5-58 to b5-60: PID Setpoints 2 to 4 on page 479*" for more information.

■ 7A: PID BiDir

Setting Value	Function	Description
7A	PID BiDir	V/f OLV OLV/PM AOLV/PM EZOLV Sets operation of the PID Bi-Directional function.

ON : Enabled

OFF : Disabled

■ 7B: Fault Reset

Setting Value	Function	Description
7B	Fault Reset	V/f OLV OLV/PM AOLV/PM EZOLV Sets the command to reset the current fault when the Run command is inactive.

If the drive detects a fault, the drive will activate the fault relay output, turn off the output, and the motor will coast to stop.

If the drive detects a fault for which you can set the stopping method, apply the appropriate Stopping Method. Then push (RESET) on the keypad to turn the Run command OFF, or activate the fault reset terminal to reset the fault.

Note:

The drive ignores the fault reset command when the Run command is active. Remove the Run command before trying to reset a fault.

■ 7C: Prg Lock

Setting Value	Function	Description
7C	Prg Lock	V/f OLV OLV/PM AOLV/PM EZOLV Sets the command to prevent parameter changes when the terminal is OFF.

You can continue to view parameter setting values when the terminal is *OFF [Parameters Cannot be Edited]*.

ON : Program Lockout

OFF : Parameter Write Prohibit

■ 7D: Drive OH2

Setting Value	Function	Description
7D	Drive OH2	V/f OLV OLV/PM AOLV/PM EZOLV Sets the drive to display an *oH2 [Drive Overheat Warning]* alarm when the input terminal is ON. The alarm does not have an effect on drive operation.

■ 7E: Node Setup

Setting Value	Function	Description
7E	Node Setup	V/f OLV OLV/PM AOLV/PM EZOLV Sets the function in CANopen communications to start the Node Setup function to set the drive node address from the host controller.

■ 7F: Comms Test

Setting Value	Function	Description
7F	Comms Test	V/f OLV OLV/PM AOLV/PM EZOLV Set the function for the drive to self-test RS-485 serial communications operation.

The Self-Diagnostics function connects the transmission terminal of the control terminal block to the reception terminal. The function transmits the data that the drive sent to make sure that the drive can communicate correctly.

Note:

Refer to Modbus communications “Self-Diagnostics” for the self-diagnostics procedure.

■ 90 to 96: Q2pack DI1 to 7

Setting Value	Function	Description
90 - 96	Q2pack DI1 to 7	V/f OLV OLV/PM AOLV/PM EZOLV Sets digital inputs used with Q2pack. Refer to the Q2pack online manual for more information.

Note:

You cannot set values 90 to 96 for inverse output.

■ 9F: Q2pack Disable

Setting Value	Function	Description
9F	Q2pack Disable	V/f OLV OLV/PM AOLV/PM EZOLV Sets operation of the Q2pack program saved in the drive.

Note:
Set *A1-07 = 2 [Q2pack Enable = With DI]* to use this function.

ON : Disabled
OFF : Enabled

■ 101 to 19F: Inverse Input of 1 to 9F

Setting Value	Function	Description
101 to 19F	Inverse Input of 1 to 9F	Sets the function of the selected MFDI to operate inversely. To select the function, enter "1xx", where the "xx" is the function setting value.

For example, to use the inverse input of *46 [ASR I Reset]*, set *H1-xx = 146*.

Note:
You cannot use inverse input for all functions.

◆ H2: DIGITAL OUTPUTS

H2 parameters set the MFDO terminal functions.

■ H2-01 to H2-03 Terminal NO/NC-CM, DO1-O1C, DO2-O2C Function Selection

The drive has four MFDO terminals. Table 12.43 shows the default function settings for the terminals.

Table 12.43 MFDO Terminals Default Function Settings

No.	Name	Default	Function
H2-01	NO,NC,CM FuncSelection	3	Fault
H2-02	DO1-O1C Func Selection	5	@Run
H2-03	DO2-O2C Func Selection	F	SpeedAgree1

Refer to Table 12.44 to set *H2-xx [MFDO Function Select]*.

Table 12.44 MFDO Setting Values

Setting Value	Function	Reference	Setting Value	Function	Reference
0 **1*	Not Used	596	1A	@BaseblockNO	603
1	Drive Ready	596	1B	@BaseblockNC	603
2	Drive Enable	596	1C	FreqRefSource	603
3	Fault	596	1D	RunCmdSource	603
4	Alarm	596	1E	Motor2 Select	603
5	@Run	596	1F	Restart Enable	603
6	@Reverse	597	20	FltReset Active	604
7	Zero Speed	597	21	PolePos Detection	604
B	@FreqOutput	597	22	Ext 24V Supply	604
D	LO/RE Status	598	2F	@SpeedSearch	604
E	EDM Safety	598	30	@TorqueLimit	604
F	SpeedAgree1	598	32	TrqDetect1NO	604
10	USpeedAgree1	599	33	TrqDetect1NC	604
11	SpeedAgree2	599	37	TrqDetect2NO	605
12	USpeedAgree2	600	38	TrqDetect2NC	605
13	FreqDetect 1	600	39	Timer Output	605
14	FreqDetect 2	601	3C	Comparator 1	605
15	FreqDetect 3	601	3D	Comparator 2	606
16	FreqDetect 4	602	3E	PID Fbk Low	606
17	@Fast Stop	602	3F	PID Fbk High	606
18	@KEBridethru	602	4A	DC Bus Undervolt	607
19	@ShortCBraking	602	4B	FreqRef Loss	607

Setting Value	Function	Reference
4C	BrkRes Fault	607
4D	Motor OL1	607
4E	Drive PreOH	607
4F	PreOHTimeLim	607
60	BrkTransFault	607
61	BrkTransOH	608
63	Maintenance	608
65	WattH Pulse	608
66	MechWeakDetect	608

Setting Value	Function	Reference
67	ModbusReg 1	608
69	ModbusReg 2	608
6A	DataLog Error	608
90 - 92	Q2pack Digital Output 1 to 3	609
100 - 192	Inverse output of 0 to 92 Sets an inverse output of the function for the MFDO. Put a 1 at the front of the function setting to set inverse output. For example, set *138* for inverse output of *38 [TrqDetect2NC]*.	609

*1 Inverse output is not available.

■ Extend MFDO1 to MFDO3 Function Selection

You can set MFDO functions to *bit 0 to bit 2 [Mbus MFDO1 to 3]* of Modbus register 15E0 (Hex.). Use *H2-40 to H2-42 [Mbus 15E0h b0 Output Function to Mbus 15E0h b2 Output Function]* to select the function.

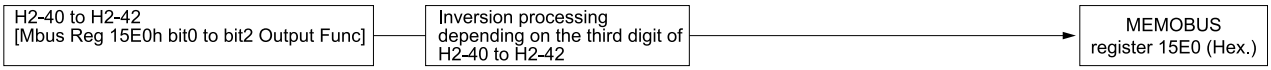

Figure 12.73 Functional Block Diagram of Modbus Multi-function Output

Table 12.45 Modbus MFDO Registers

Register No. (Hex.)	Name	
15E0	bit0	Mbus MFDO 1
	bit1	Mbus MFDO 2
	bit2	Mbus MFDO 3

Note:
- Refer to *H2: DIGITAL OUTPUTS on page 587* for more information about MFDO setting values.
- When you do not set functions to *H2-40 to H2-42*, set them to *0*.

■ Output of Logical Operation Results of MFDO

This enables the logical operation results of two MFDOs to be output to one MFDO terminal.

Use *H2-60, H2-63, and H2-66 [NO,NC,CM 2nd Function, DO1 2nd Function, and DO2 2nd Function]* to set the function of the output signal for which you will perform logical operations.

Use *H2-61, H2-64, and H2-67 [NO,NC,CM Logic Operation, DO1 Logic Operation, and DO2 Logic Operation]* to set the logical operation.

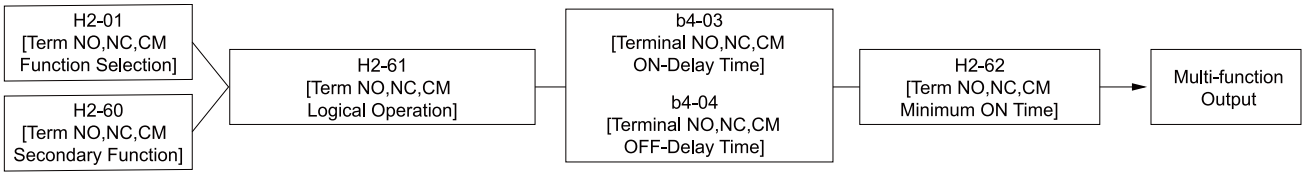

Figure 12.74 Functional Block Diagram of Logical Operation Output for MFDO 1

Table 12.46 MFDO Logical Operation Table

Logical Operation Selection H2-61, H2-64, H2-67	Logical Operation Expression	Logical Operation Notation
1	A=B=1	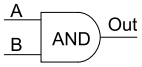
2	A=1 or B=1	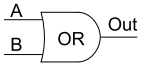
3	A=0 or B=0	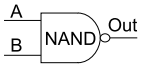

Logical Operation Selection H2-61, H2-64, H2-67	Logical Operation Expression	Logical Operation Notation
4	A=B=0	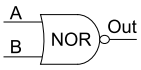
5	A=B	A=B
6	A != B	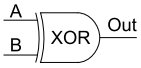
7	AND(A, $\overline{B}$)	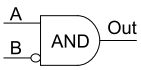
8	OR(A, $\overline{B}$)	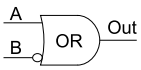
9	-	On

Note:
- If you use the function to output logical calculation results, you cannot set *H2-01 to H2-03 = 1xx [Inverse Output of xx]*. If you do, the drive will detect *oPE33 [Digital Output Selection Error]*.
- When you do not use *H2-60, H2-63, and H2-66*, set them to *0*. The through mode function is not supported.

■ H2-01: NO,NC,CM FuncSelection

No. (Hex.)	Name	Description	Default (Range)
H2-01 (040B)	NO,NC,CM FuncSelection	V/f OLV OLV/PM AOLV/PM EZOLV Sets the function set for MFDO terminal NO-CM or NC-CM.	3 (0 - 1FF)

Note:
Set this parameter to *0* when the terminal is not being used or to use the terminal in through mode.

■ H2-02: DO1-O1C Func Selection

No. (Hex.)	Name	Description	Default (Range)
H2-02 (040C)	DO1-O1C Func Selection	V/f OLV OLV/PM AOLV/PM EZOLV Sets the function for MFDO terminal DO1-O1C.	5 (0 - 1FF)

Note:
Set this parameter to *0* when the terminal is not being used or to use the terminal in through mode.

■ H2-03: DO2-O2C Func Selection

No. (Hex.)	Name	Description	Default (Range)
H2-03 (040D)	DO2-O2C Func Selection	V/f OLV OLV/PM AOLV/PM EZOLV Sets the function for MFDO terminal DO2-O2C.	F (0 - 1FF)

Note:
Set this parameter to *0* when the terminal is not being used or to use the terminal in through mode.

■ H2-06: kWH Out Unit Selection

No. (Hex.)	Name	Description	Default (Range)
H2-06 (0437)	kWH Out Unit Selection	V/f OLV OLV/PM AOLV/PM EZOLV Sets the unit for the output signal when *H2-01 to H2-03 = 65 [MFDO Function Select = WattH Pulse]*.	1 (1 - 5)

This output is input to the Watt hour meter or PLC through a 200 ms pulse signal. This parameter sets the kWh unit for each pulse output.

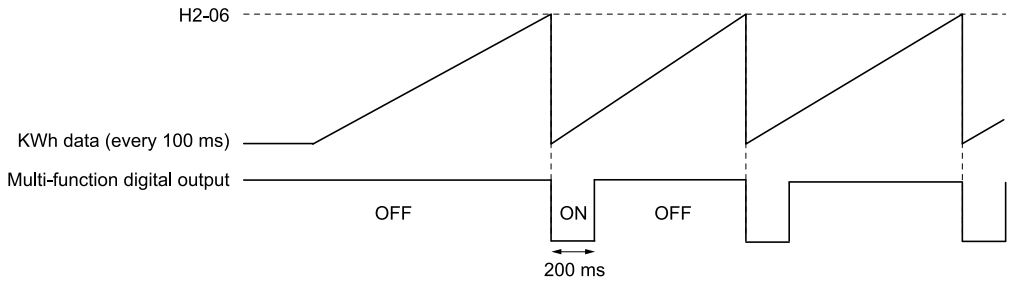

Figure 12.75 Example MFDO when Configured for Watt Hours

Note:
- When the power value is a negative value (regenerative state), the drive does not count Watt hours.
- When the control power supply to the drive is operating, the drive will keep the Watt hours. If a momentary power loss causes the drive to lose control power, the Watt hour count will reset.

1 : 0.1 kWh units
2 : 1 kWh units
3 : 10 kWh units
4 : 100 kWh units
5 : 1000 kWh units

■ H2-07: Mbus Reg1 Address Select

No. (Hex.)	Name	Description	Default (Range)
H2-07 (0B3A)	Mbus Reg1 Address Select	V/f OLV OLV/PM AOLV/PM EZOLV Sets the address of the Modbus register output to the MFDO terminal.	0001 (0001 - 1FFF)

Sets the address of the register that is output to *ModbusReg 1 [H2-01 to H2-03 = 67]* and uses the bit in *H2-08 [Mbus Reg1 Bit Select]*.

■ H2-08: Mbus Reg1 Bit Select

No. (Hex.)	Name	Description	Default (Range)
H2-08 (0B3B)	Mbus Reg1 Bit Select	V/f OLV OLV/PM AOLV/PM EZOLV Sets the bit of the Modbus register output to the MFDO terminal.	0000 (0000 - FFFF)

Sets the bit of the register that is output to *ModbusReg 1 [H2-01 to H2-03 = 67]* and uses the address in *H2-07 [Mbus Reg1 Address Select]*.

■ H2-09: Mbus Reg2 Address Select

No. (Hex.)	Name	Description	Default (Range)
H2-09 (0B3C)	Mbus Reg2 Address Select	V/f OLV OLV/PM AOLV/PM EZOLV Sets the address of the Modbus register output to the MFDO terminal.	0001 (0001 - 1FFF)

Sets the address of the register that is output to *ModbusReg 1 [H2-01 to H2-03 = 67]* and uses the bit in *H2-10 [Mbus Reg2 Bit Select]*.

■ H2-10: Mbus Reg2 Bit Select

No. (Hex.)	Name	Description	Default (Range)
H2-10 (0B3D)	Mbus Reg2 Bit Select	V/f OLV OLV/PM AOLV/PM EZOLV Sets the bit of the Modbus register output to the MFDO terminal.	0000 (0000 - FFFF)

Sets the bit of the register that is output to *ModbusReg 1 [H2-01 to H2-03 = 67]* and uses the address in *H2-09 [Mbus Reg2 Address Select]*.

■ H2-20: Compare1 Mon.Selection

No. (Hex.)	Name	Description	Default (Range)
H2-20 (1540)	Compare1 Mon.Selection	V/f OLV OLV/PM AOLV/PM EZOLV Sets the monitor number for comparator 1. Set the *x-xx* part of the *Ux-xx [Monitor]*. For example, set *H2-20 = 102* to monitor *U1-02 [Output Frequency]*.	102 (000 - 999)

Note:
- For information on the comparator function, refer to *3C: Comparator 1 on page 605* and *3D: Comparator 2 on page 606*.
- The configurable monitor changes when the control method changes.

■ H2-21: Compare1 Low Limit

No. (Hex.)	Name	Description	Default (Range)
H2-21 (1541)	Compare1 Low Limit	V/f OLV OLV/PM AOLV/PM EZOLV Sets the lower limit detection level for comparator 1 when the full scale analog output for the monitor selected in *H2-20 [Compare1 Mon.Selection]* is the 100% value.	0.0% (0.0 - 300.0%)

Note:
For information on the comparator function, refer to *3C: Comparator 1 on page 605* and *3D: Comparator 2 on page 606*.

■ H2-22: Compare1 Up Limit

No. (Hex.)	Name	Description	Default (Range)
H2-22 (1542)	Compare1 Up Limit	V/f OLV OLV/PM AOLV/PM EZOLV Sets the upper limit detection level for comparator 1 when the full scale analog output for the monitor selected in *H2-20 [Compare1 Mon.Selection]* is the 100% value.	0.0% (0.0 - 300.0%)

Note:
For information on the comparator function, refer to *3C: Comparator 1 on page 605* and *3D: Comparator 2 on page 606*.

■ H2-23: Compare1 Hysteresis

No. (Hex.)	Name	Description	Default (Range)
H2-23 (1543)	Compare1 Hysteresis	V/f OLV OLV/PM AOLV/PM EZOLV Sets the hysteresis level for comparator 1 as a percentage of the full scale analog output for the monitor selected in *H2-20 [Compare1 Mon.Selection]*.	0.0% (0.0 - 10.0%)

Note:
For information on the comparator function, refer to *3C: Comparator 1 on page 605* and *3D: Comparator 2 on page 606*.

■ H2-24: Compare1 On-Delay Time

No. (Hex.)	Name	Description	Default (Range)
H2-24 (1544)	Compare1 On-Delay Time	V/f OLV OLV/PM AOLV/PM EZOLV Sets the on-delay time for comparator 1.	0.0 s (0.0 - 600.0 s)

Note:
For information on the comparator function, refer to *3C: Comparator 1 on page 605* and *3D: Comparator 2 on page 606*.

■ H2-25: Compare1 Off-Delay Time

No. (Hex.)	Name	Description	Default (Range)
H2-25 (1545)	Compare1 Off-Delay Time	V/f OLV OLV/PM AOLV/PM EZOLV Sets the off-delay time for comparator 1.	0.0 s (0.0 - 600.0 s)

Note:
For information on the comparator function, refer to *3C: Comparator 1 on page 605* and *3D: Comparator 2 on page 606*.

■ H2-26: Compare2 Mon.Selection

No. (Hex.)	Name	Description	Default (Range)
H2-26 (1546)	Compare2 Mon.Selection	V/f OLV OLV/PM AOLV/PM EZOLV Sets the monitor number for comparator 2. Set the *x-xx* part of the *Ux-xx [Monitor]*. For example, set *H2-26 = 103* to monitor *U1-03 [Output Current]*.	103 (000 - 999)

Note:
- The configurable monitor changes when the control method changes.
- When you use the terminal in through mode, set this parameter to *000* or *031*. You can set the terminal output level from the PLC through Modbus communications or the communication option.
- For information on the comparator function, refer to *3C: Comparator 1 on page 605* and *3D: Comparator 2 on page 606*.

■ H2-27: Compare2 Low Limit

No. (Hex.)	Name	Description	Default (Range)
H2-27 (1547)	Compare2 Low Limit	V/f OLV OLV/PM AOLV/PM EZOLV Sets the lower limit detection level for comparator 2 as a percentage of the full scale analog output for the monitor selected in *H2-26 [Compare2 Mon.Selection]*.	0.0% (0.0 - 300.0%)

Note:
For information on the comparator function, refer to *3C: Comparator 1 on page 605* and *3D: Comparator 2 on page 606*.

■ H2-28: Compare2 Up Limit

No. (Hex.)	Name	Description	Default (Range)
H2-28 (1548)	Compare2 Up Limit	V/f OLV OLV/PM AOLV/PM EZOLV Sets the upper limit detection level for comparator 2 as a percentage of the full scale analog output for the monitor selected in *H2-26 [Compare2 Mon.Selection]*.	0.0% (0.0 - 300.0%)

Note:
For information on the comparator function, refer to *3C: Comparator 1 on page 605* and *3D: Comparator 2 on page 606*.

■ H2-29: Compare2 Hysteresis

No. (Hex.)	Name	Description	Default (Range)
H2-29 (1549)	Compare2 Hysteresis	V/f OLV OLV/PM AOLV/PM EZOLV Sets the hysteresis level for comparator 2 as a percentage of the full scale analog output for the monitor selected in *H2-26 [Compare2 Mon.Selection]*.	0.0% (0.0 - 10.0%)

Note:
For information on the comparator function, refer to *3C: Comparator 1 on page 605* and *3D: Comparator 2 on page 606*.

■ H2-30: Compare2 On-Delay Time

No. (Hex.)	Name	Description	Default (Range)
H2-30 (154A)	Compare2 On-Delay Time	V/f OLV OLV/PM AOLV/PM EZOLV Sets the on-delay time for comparator 2.	0.0 s (0.0 - 600.0 s)

Note:
For information on the comparator function, refer to *3C: Comparator 1 on page 605* and *3D: Comparator 2 on page 606*.

■ H2-31: Compare2 Off-Delay Time

No. (Hex.)	Name	Description	Default (Range)
H2-31 (154B)	Compare2 Off-Delay Time	V/f OLV OLV/PM AOLV/PM EZOLV Sets the off-delay time for comparator 2.	0.0 s (0.0 - 600.0 s)

Note:
For information on the comparator function, refer to *3C: Comparator 1 on page 605* and *3D: Comparator 2 on page 606*.

■ H2-32: Compare1 Filter Time

No. (Hex.)	Name	Description	Default (Range)
H2-32 (159A)	Compare1 Filter Time	V/f OLV OLV/PM AOLV/PM EZOLV Sets the time constant that is applied to the primary delay filter used for the analog output of the monitor selected with *H2-20 [Compare1 Mon.Selection]*.	0.0s (0.0 - 10.0 s)

Note:

For information on the comparator function, refer to *3C: Comparator 1 on page 605* and *3D: Comparator 2 on page 606*.

■ H2-33: Compare1 Protection Selection

No. (Hex.)	Name	Description	Default (Range)
H2-33 (159B)	Compare1 Protection Selection	V/f OLV OLV/PM AOLV/PM EZOLV Sets drive operation when it detects *CP1 [Comparator1 Limit Fault]*.	4 (0 - 4)

0 : Ramp->Stop

The drive ramps the motor to stop in the deceleration time. The output terminal set for *Fault [H2-01 to H2-03 = 3]* activates.

1 : Coast->Stop

The output turns off and the motor coasts to stop. The output terminal set for *Fault [H2-01 to H2-03 = 3]* activates.

2 : Fast Stop (C1-09)

The drive stops the motor in the deceleration time set in *C1-09 [Fast Stop Time]*. The output terminal set for *Fault [H2-01 to H2-03 = 3]* activates.

3 : Alarm Only

The keypad shows *CP1* and the drive continues operation at the current frequency reference.

Note:

The output terminal set to *Alarm [H2-01 to H2-03 = 4]* activates.

4 : Low Speed (L8-19)

■ H2-34: Compare2 Filter Time

No. (Hex.)	Name	Description	Default (Range)
H2-34 (159C)	Compare2 Filter Time	V/f OLV OLV/PM AOLV/PM EZOLV Sets the time constant that is applied to the primary delay filter used for the analog output of the monitor selected with *H2-26 [Compare2 Mon.Selection]*.	0.0s (0.0 - 10.0 s)

■ H2-35: Compare2 Protection Selection

No. (Hex.)	Name	Description	Default (Range)
H2-35 (159D)	Compare2 Protection Selection	V/f OLV OLV/PM AOLV/PM EZOLV Sets drive operation when it detects *CP2 [Comparator2 Limit Fault]*.	4 (0 - 4)

0 : Ramp->Stop

The drive ramps the motor to stop in the deceleration time. The output terminal set for *Fault [H2-01 to H2-03 = 3]* activates.

1 : Coast->Stop

The output turns off and the motor coasts to stop. The output terminal set for *Fault [H2-01 to H2-03 = 3]* activates.

2 : Fast Stop (C1-09)

The drive stops the motor in the deceleration time set in *C1-09 [Fast Stop Time]*. The output terminal set for *Fault [H2-01 to H2-03 = 3]* activates.

3 : Alarm Only

The keypad shows *CP2* and the drive continues operation at the current frequency reference.

Note:

The output terminal set to *Alarm [H2-01 to H2-03 = 4]* activates.

4 : Low Speed (L8-19)

■ H2-36: Compare1 HoldTime

No. (Hex.)	Name	Description	Default (Range)
H2-36 (159E)	Compare1 HoldTime	V/f OLV OLV/PM AOLV/PM EZOLV Sets the length of time that *CP1 [Comparator1 Limit Fault]* is disabled.	0.0 s (0.0 - 1000.0 s)

Note:
- After you enter a Run command and wait for the time set in this parameter, the drive will monitor operation and make sure that it is in the Comparator 1 range until you enter the Stop command.
- When *CP1* detection is disabled, the drive will activate the output terminal set for *Comparator 1 [H2-xx = 3C]*.

■ H2-37: Compare2 HoldTime

No. (Hex.)	Name	Description	Default (Range)
H2-37 (159F)	Compare2 HoldTime	V/f OLV OLV/PM AOLV/PM EZOLV Sets the length of time that *CP2 [Comparator2 Limit Fault]* is disabled.	0.0 s (0.0 - 1000.0 s)

Note:
- After you enter a Run command and wait for the time set in this parameter, the drive will monitor operation and make sure that it is in the Comparator 2 range until you enter the Stop command.
- When *CP2* detection is disabled, the drive will activate the output terminal set for *Comparator 2 [H2-xx = 3D]*.

■ H2-40: Mbus 15E0h b0 Output Function

No. (Hex.)	Name	Description	Default (Range)
H2-40 (0B58)	Mbus 15E0h b0 Output Function	V/f OLV OLV/PM AOLV/PM EZOLV Sets the MFDO for bit 0 of Modbus register 15E0 (Hex.).	F (0 - 1FF)

■ H2-41: Mbus 15E0h b1 Output Function

No. (Hex.)	Name	Description	Default (Range)
H2-41 (0B59)	Mbus 15E0h b1 Output Function	V/f OLV OLV/PM AOLV/PM EZOLV Sets the MFDO for bit 1 of Modbus register 15E0 (Hex.).	F (0 - 1FF)

■ H2-42: Mbus 15E0h b2 Output Function

No. (Hex.)	Name	Description	Default (Range)
H2-42 (0B5A)	Mbus 15E0h b2 Output Function	V/f OLV OLV/PM AOLV/PM EZOLV Sets the MFDO for bit 2 of Modbus register 15E0 (Hex.).	F (0 - 1FF)

■ H2-60: NO,NC,CM 2nd Function

No. (Hex.)	Name	Description	Default (Range)
H2-60 (1B46) Expert	NO,NC,CM 2nd Function	V/f OLV OLV/PM AOLV/PM EZOLV Sets the second function for terminal NO/NC-CM. Outputs the logical calculation results of the terminals assigned to functions by *H2-01 [NO,NC,CM FuncSelection]*.	0 (0 - FF)

■ H2-61: NO,NC,CM Logic Operation

No. (Hex.)	Name	Description	Default (Range)
H2-61 (1B47) Expert	NO,NC,CM Logic Operation	V/f OLV OLV/PM AOLV/PM EZOLV Sets the logical operation for the functions set in *H2-01 [NO,NC,CM FuncSelection]* and *H2-60 [NO,NC,CM 2nd Function]*.	1 (1 - 9)

Refer to *Output of Logical Operation Results of MFDO on page 588* for more information about the relation between parameter settings and logical operations.

■ H2-62: NO,NC,CM Min ON-Time

No. (Hex.)	Name	Description	Default (Range)
H2-62 (1B48) Expert	NO,NC,CM Min ON-Time	V/f OLV OLV/PM AOLV/PM EZOLV Sets the minimum ON time that the drive uses to output the logical calculation results from terminal NO,NC,CM.	0.1 s (0.0 - 25.0 s)

■ H2-63: DO1 2nd Function

No. (Hex.)	Name	Description	Default (Range)
H2-63 (1B49) Expert	DO1 2nd Function	V/f OLV OLV/PM AOLV/PM EZOLV Sets the second function for terminal DO1-O1C. Outputs the logical calculation results of the terminals assigned to functions by *H2-02 [DO1-O1C Func Selection]*.	o (0 - FF)

■ H2-64: DO1 Logic Operation

No. (Hex.)	Name	Description	Default (Range)
H2-64 (1B4A) Expert	DO1 Logic Operation	V/f OLV OLV/PM AOLV/PM EZOLV Sets the logical operation for the functions set in *H2-02 [DO1-O1C Func Selection]* and *H2-63 [DO1 2nd Function]*.	1 (1 - 9)

Refer to *Output of Logical Operation Results of MFDO on page 588* for more information about the relation between parameter settings and logical operations.

■ H2-65: DO1 Min ON-Time

No. (Hex.)	Name	Description	Default (Range)
H2-65 (1B4B) Expert	DO1 Min ON-Time	V/f OLV OLV/PM AOLV/PM EZOLV Sets the minimum ON time used to output the logical calculation results from terminal DO1-O1C.	0.1 s (0.0 - 25.0 s)

■ H2-66: DO2 2nd Function

No. (Hex.)	Name	Description	Default (Range)
H2-66 (1B4C) Expert	DO2 2nd Function	V/f OLV OLV/PM AOLV/PM EZOLV Sets the second function for terminal DO2-O2C. Outputs the logical calculation results of the terminals assigned to functions by *H2-03 [DO2-O2C Func Selection]*.	0 (0 - FF)

■ H2-67: DO2 Logic Operation

No. (Hex.)	Name	Description	Default (Range)
H2-67 (1B4D) Expert	DO2 Logic Operation	V/f OLV OLV/PM AOLV/PM EZOLV Sets the logical operation for the functions set in *H2-03 [DO2-O2C Func Selection]* and *H2-66 [DO2 2nd Function]*.	1 (1 - 9)

Refer to *Output of Logical Operation Results of MFDO on page 588* for more information about the relation between parameter settings and logical operations.

■ H2-68: DO2 Min ON-Time

No. (Hex.)	Name	Description	Default (Range)
H2-68 (1B4E) Expert	DO2 Min ON-Time	V/f OLV OLV/PM AOLV/PM EZOLV Sets the minimum ON time used to output the logical calculation results from terminal DO2-O2C.	0.1 s (0.0 - 25.0 s)

◆ MFDO Setting Value

Selects the function configured to a MFDO.

■ 0: Through Mode

Setting Value	Function	Description
0	Through Mode	V/f OLV OLV/PM AOLV/PM EZOLV Use this setting for unused terminals or to use terminals in through mode. Also use this setting as the PLC contact output via Modbus or the communication option. This signal does not function if signals from the PLC are not configured.

■ 1: Drive Ready

Setting Value	Function	Description
1	Drive Ready	V/f OLV OLV/PM AOLV/PM EZOLV The terminal activates when the drive is ready and running.

The terminal deactivates in these conditions:

- When the power supply is OFF
- During a fault
- When there is problem with the control power supply
- When there is a parameter configuration error and the drive cannot operate although there is a Run command
- When you enter a Run command and it immediately triggers an overvoltage or undervoltage fault because the drive has an overvoltage or undervoltage fault during stop
- When the drive is in Programming Mode and will not accept a Run command

■ 2: Drive Enable

Setting Value	Function	Description
2	Drive Enable	V/f OLV OLV/PM AOLV/PM EZOLV This terminal activates when the *H1-xx = 1A [Drive Enable]* terminal activates.

■ 3: Fault

Setting Value	Function	Description
3	Fault	V/f OLV OLV/PM AOLV/PM EZOLV The terminal activates when the drive detects a fault.

Note:
The terminal will not activate for *CPF00* and *CPF01 [Control Circuit Error]* faults.

■ 4: Alarm

Setting Value	Function	Description
4	Alarm	V/f OLV OLV/PM AOLV/PM EZOLV The terminal turns on when the drive detects a minor fault.

■ 5: @Run

Setting Value	Function	Description
5	@Run	V/f OLV OLV/PM AOLV/PM EZOLV The terminal activates when the Run command is input and when the drive is outputting voltage.

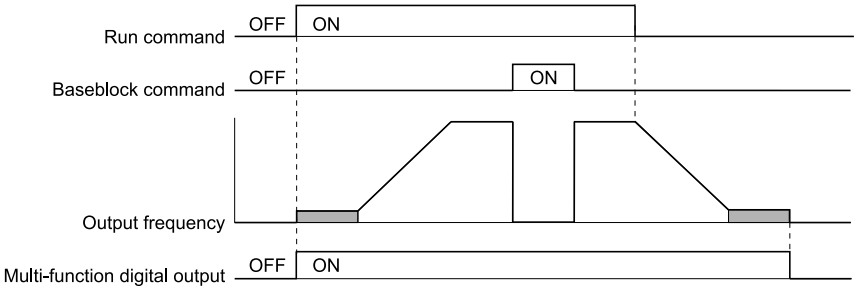

Figure 12.76 Drive Running Time Chart

ON : Drive is running

The drive is receiving a Run command or outputting voltage.

OFF : Drive is stopping

Drive is stopped.

■ 6: @Reverse

Setting Value	Function	Description
6	@Reverse	V/f OLV OLV/PM AOLV/PM EZOLV The terminal activates when the motor operates in the reverse direction.

ON : The motor is operating in the reverse direction.

OFF : The motor is operating in the forward direction or the motor stopped.

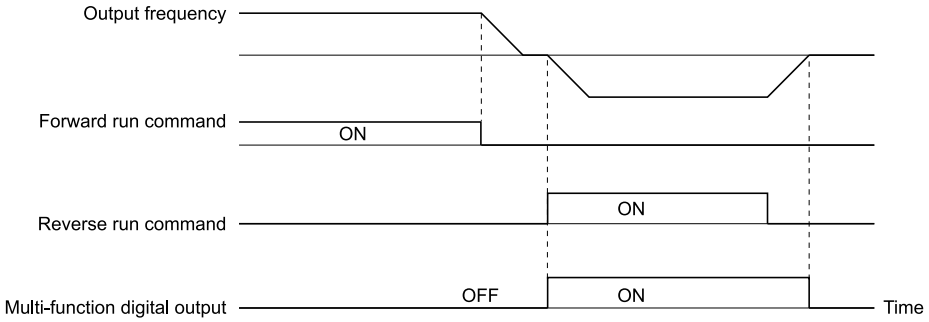

Figure 12.77 Reverse Operation Output Time Chart

■ 7: Zero Speed

Setting Value	Function	Description
7	Zero Speed	V/f OLV OLV/PM AOLV/PM EZOLV The terminal activates when the output frequency is less than the value of *E1-09 [Min Output Frequency]* or *b2-01 [ZSpd/DCI Threshold]*.

Note:

Parameter *A1-02 [Control Method]* selects which parameter is the reference.

A1-02 Setting	Control Method Selection	Parameter Used as the Reference
0	V/f Control	*E1-09*
2	OLVector	*b2-01*
5	PM OLVector	*E1-09*
6	PM AOLVector	*E1-09*
8	EZ Vector	*E1-09*

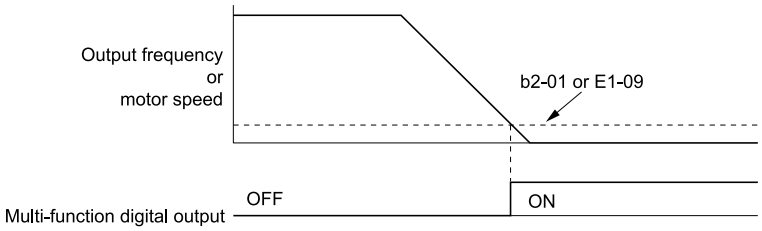

Figure 12.78 Zero Speed Time Chart

ON : Output frequency < value of *E1-09* or *b2-01*.

OFF : Output frequency ≥ value of *E1-09* or *b2-01*.

■ B: @FreqOutput

Setting Value	Function	Description
B	@FreqOutput	V/f OLV OLV/PM AOLV/PM EZOLV The terminal activates when the drive outputs frequency.

ON : The drive outputs frequency.

OFF : The drive does not output frequency.

Note:

The terminal deactivates in these conditions:
- During Stop
- During baseblock
- During DC Injection Braking (initial excitation)
- During Short Circuit Braking

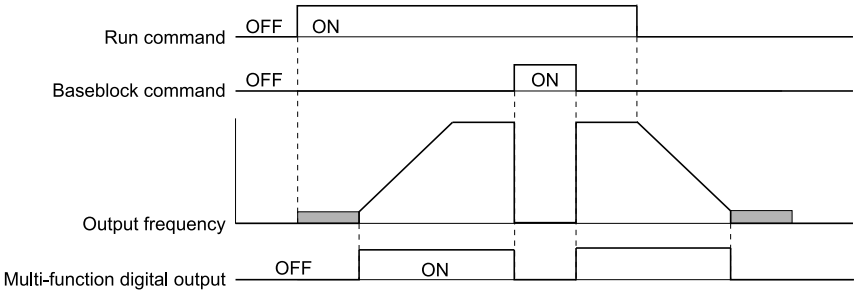

Figure 12.79 Active Frequency Output Time Chart

■ D: LO/RE Status

Setting Value	Function	Description
D	LO/RE Status	V/f OLV OLV/PM AOLV/PM EZOLV The terminal activates when the Run command source or frequency reference source is LOCAL.

ON : LOCAL

The keypad is the Run command source or the frequency reference source.

OFF : REMOTE

The Run command source or frequency reference source is an external source set with *b1-01 [Freq. Ref. Sel. 1]*, *b1-15 [Freq. Ref. Sel. 2]*, *b1-02 [Run Comm. Sel 1]*, or *b1-16 [Run Comm. Sel 2]*.

■ E: EDM Safety

Setting Value	Function	Description
E	EDM Safety	V/f OLV OLV/PM AOLV/PM EZOLV The terminal activates (safety stop state) when the safety circuit and safety diagnosis circuit are operating correctly and when terminals H1-HC and H2-HC are OFF (Open).

Note:

EDM = External Device Monitor

ON : Safety stop state

Terminals H1-HC and H2-HC are OFF (Open) (safety stop state).

OFF : Safety circuit fault or RUN/READY

Terminal H1-HC or terminal H2-HC is OFF (Open) (safety circuit fault), or the two terminals are ON or have short circuited (RUN/READY).

■ F: SpeedAgree1

Setting Value	Function	Description
F	SpeedAgree1	V/f OLV OLV/PM AOLV/PM EZOLV The terminal activates when the output frequency is in the range of the frequency reference ± *L4-02 [SpAgree Det.Width]*.

Note:

The detection function operates in the two motor rotation directions.

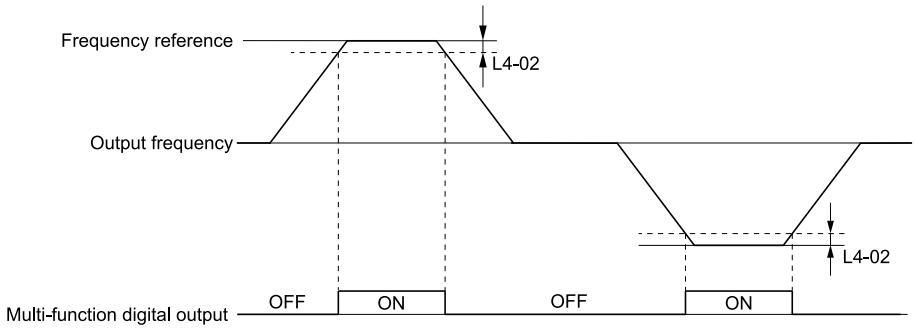

Figure 12.80 Speed Agree 1 Time Chart

ON : The output frequency is in the range of "frequency reference ± *L4-02*".

OFF : The output frequency does not align with the frequency reference although the drive is running.

■ 10: USpeedAgree1

Setting Value	Function	Description
10	USpeedAgree1	V/f OLV OLV/PM AOLV/PM EZOLV The terminal activates when the output frequency is in the range of *L4-01 [SpAgree Det.Level]* ± *L4-02 [SpAgree Det.Width]* and in the range of the frequency reference ± *L4-02*.

Note:

The detection function operates in the two motor rotation directions. The drive uses the *L4-01* value as the forward/reverse detection level.

ON : The output frequency is in the range of "*L4-01* ± *L4-02*" and the range of frequency reference ± *L4-02*.

OFF : The output frequency is not in the range of "*L4-01* ± *L4-02*" nor the range of frequency reference ± *L4-02*.

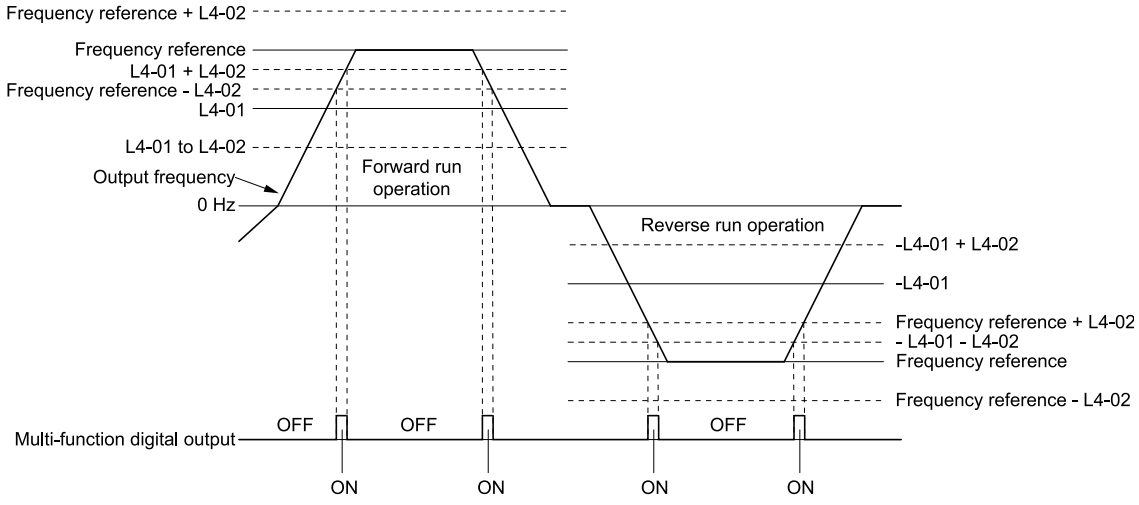

Figure 12.81 User-Defined Speed Agree 1 Time Chart

■ 11: SpeedAgree2

Setting Value	Function	Description
11	SpeedAgree2	V/f OLV OLV/PM AOLV/PM EZOLV The terminal activates when the output frequency is in the range of the frequency reference ± *L4-04 [SpAgree Det.Width(+/-)]*.

Note:

The detection function operates in the two motor rotation directions.

ON : The output frequency is in the range of "frequency reference ± *L4-04*".

OFF : The output frequency is not in the range of "frequency reference ± *L4-04*".

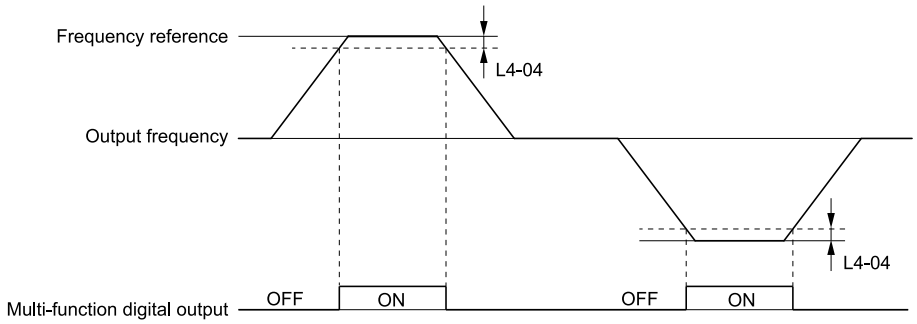

Figure 12.82 Speed Agree 2 Time Chart

■ 12: USpeedAgree2

Setting Value	Function	Description
12	USpeedAgree2	V/f OLV OLV/PM AOLV/PM EZOLV The terminal activates when the output frequency is in the range of *L4-03 [SpAgree Det.Level(+/-)]* ± *L4-04 [SpAgree Det. Width(+/-)]* and in the range of the frequency reference ± *L4-04*.

Note:

The detection level set with *L4-03* is a signed value. The drive will only detect in one direction.

ON : The output frequency is in the range of "*L4-03* ± *L4-04*" and the range of frequency reference ± *L4-04*.

OFF : The output frequency is not in the range of "*L4-03* ± *L4-04*" nor the range of frequency reference ± *L4-04*.

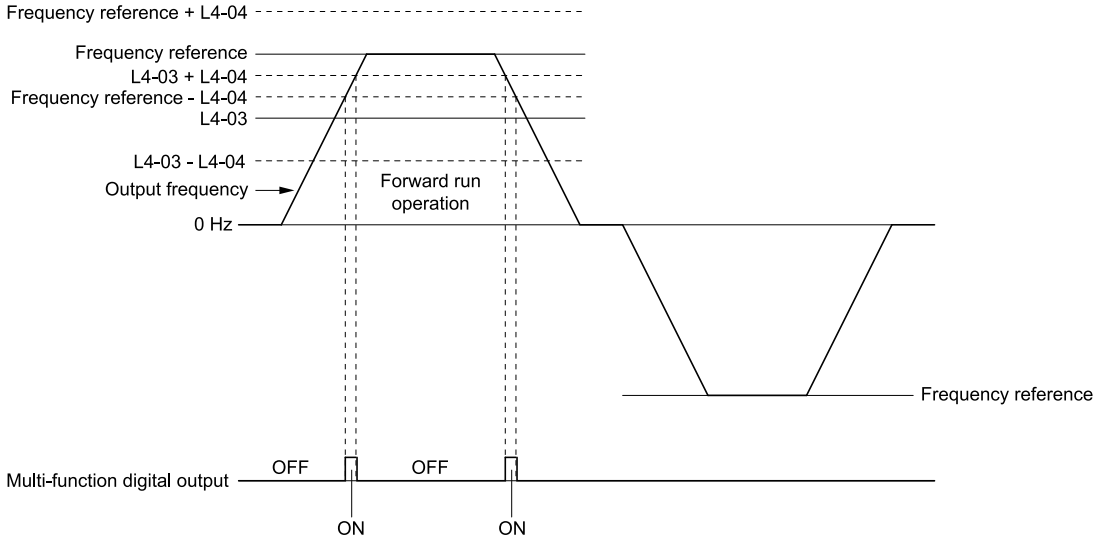

Figure 12.83 Example of User-set Speed Agree 2 (L4-03 Is Positive)

■ 13: FreqDetect 1

Setting Value	Function	Description
13	FreqDetect 1	V/f OLV OLV/PM AOLV/PM EZOLV The terminal deactivates when the output frequency is higher than the value of *L4-01 [SpAgree Det.Level]* + *L4-02 [SpAgree Det.Width]*. After the terminal turns off, the terminal continues to remain off until the output frequency reaches the level set with *L4-01*.

Note:

The detection function operates in the two motor rotation directions. The drive uses the *L4-01* value as the forward/reverse detection level.

ON : The output frequency is less than the value of *L4-01* or does not exceed the value of *L4-01* + *L4-02*.

OFF : The output frequency is higher than the value of *L4-01* + *L4-02*.

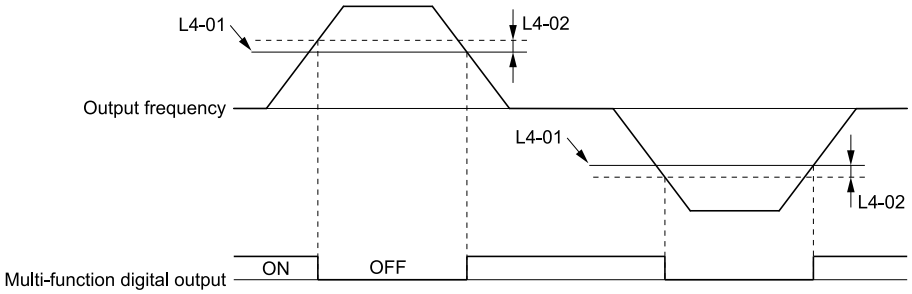

Figure 12.84 Frequency Detection 1 Time Chart

Note:

Figure 12.84 shows the result of the configuration when *L4-07 = 2 [SpAgree Det.Selection = Always Detect]*. The default setting of *L4-07* is *0 [No detection during baseblock]*. When the speed agreement detection selection is "No Detection during Baseblock", the terminal is deactivated when the drive output stops.

■ 14: FreqDetect 2

Setting Value	Function	Description
14	FreqDetect 2	V/f OLV OLV/PM AOLV/PM EZOLV The terminal activates when the output frequency is higher than the value of *L4-01 [SpAgree Det.Level]*. After the terminal activates, the terminal stays activated until the output frequency is at the value of *L4-01 - L4-02*.

Note:

The detection function operates in the two motor rotation directions. The drive uses the *L4-01* value as the forward/reverse detection level.

ON : The output frequency is higher than the value of *L4-01*.

OFF : The output frequency is less than the value of "*L4-01 - L4-02*," or it is not more than the value of *L4-01*.

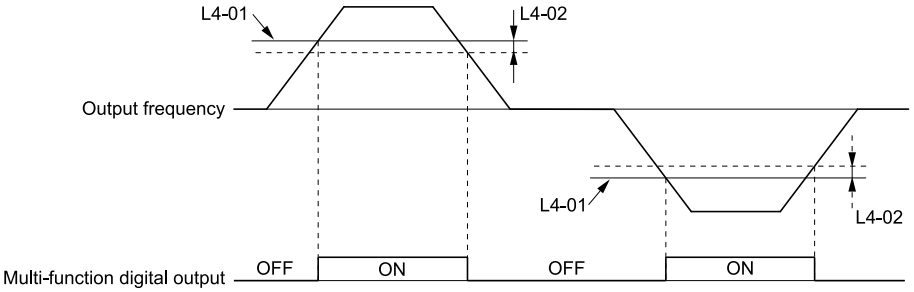

Figure 12.85 Frequency Detection 2 Time Chart

■ 15: FreqDetect 3

Setting Value	Function	Description
15	FreqDetect 3	V/f OLV OLV/PM AOLV/PM EZOLV The terminal deactivates when the output frequency is higher than the value of "*L4-03 [SpAgree Det.Level(+/-)] + L4-04 [SpAgree Det.Width(+/-)]*". After the terminal deactivates, the terminal stays deactivated until the output frequency is at the value of *L4-03*.

Note:

The detection level set with *L4-03* is a signed value. The drive will only detect in one direction.

ON : The output frequency is less than the value of *L4-03* or it is not more than the value of *L4-03* + *L4-04*.

OFF : The output frequency is higher than the value of *L4-03* + *L4-04*.

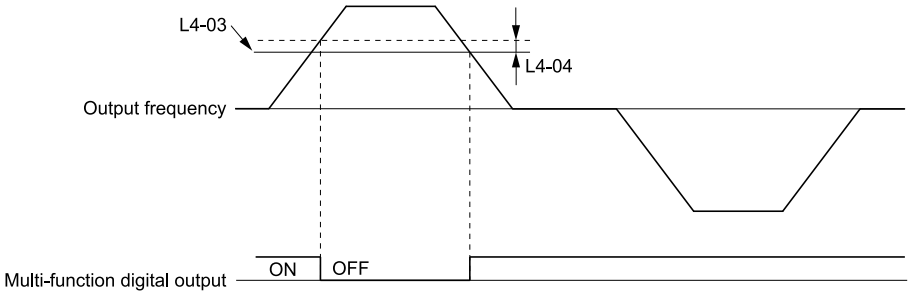

Figure 12.86 Example of Frequency Detection 3 (value of L4-03 Is Positive)

Note:

Figure 12.86 shows the result of the configuration when *L4-07 = 2 [SpAgree Det.Selection = Always Detect]*. The default setting of *L4-07* is *1 [No Detect@BB]*. When the speed agreement detection selection is "No Detection during Baseblock", the terminal is deactivated when the drive output stops.

■ 16: FreqDetect 4

Setting Value	Function	Description
16	FreqDetect 3	V/f OLV OLV/PM AOLV/PM EZOLV The terminal activates when the output frequency is higher than the value of *L4-03 [SpAgree Det.Level(+/-)]*. After the terminal activates, the terminal stays activated until the output frequency is at the value of *L4-03 - L4-04*.

Note:

The detection level set with *L4-03* is a signed value. The drive will only detect in one direction.

ON : The output frequency is higher than the value of *L4-03*.

OFF : The output frequency is less than the value of "*L4-03 - L4-04*," or it is not more than the value of *L4-03*.

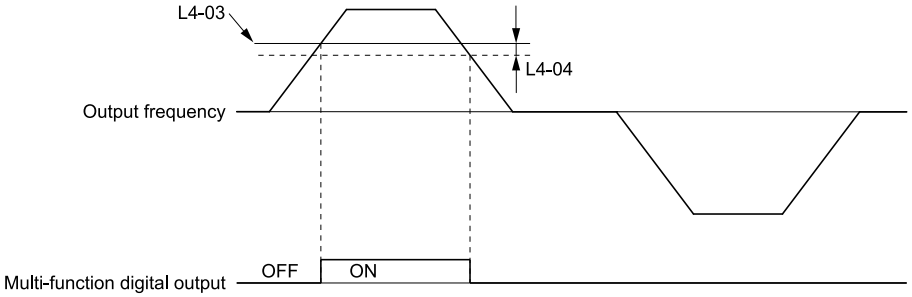

Figure 12.87 Example of Frequency Detection 4 (value of L4-03 Is Positive)

■ 17: @Fast Stop

Setting Value	Function	Description
17	@Fast Stop	V/f OLV OLV/PM AOLV/PM EZOLV The terminal activates when the fast stop is in operation.

■ 18: @KEBridethru

Setting Value	Function	Description
18	@KEBridethru	V/f OLV OLV/PM AOLV/PM EZOLV The activates during KEB Ride-Thru.

Note:

Refer to "*KEB Ride-Thru Function on page 638*" for more information.

■ 19: @ShortCBraking

Setting Value	Function	Description
19	@ShortCBraking	V/f OLV OLV/PM AOLV/PM EZOLV The terminal activates during Short Circuit Braking.

Note:

- When *A1-02 = 8 [Control Method = EZ Vector]*, this function is available when you use a PM motor.
- Refer to "*b2: DC INJ / SHORT CKT BRAKE on page 454*" for more information.

■ 1A: @BaseblockNO

Setting Value	Function	Description
1A	@BaseblockNO	V/f OLV OLV/PM AOLV/PM EZOLV The terminal turns on during baseblock. When the drive is in baseblock, the drive output transistor stops switching and does not make DC bus voltage.

ON : During baseblock

OFF : The drive is not in baseblock.

■ 1B: @BaseblockNC

Setting Value	Function	Description
1B	@BaseblockNC	V/f OLV OLV/PM AOLV/PM EZOLV The terminal deactivates during baseblock. When the drive is in baseblock, the drive output transistor stops switching and does not make DC bus voltage.

ON : The drive is not in baseblock.

OFF : During baseblock

■ 1C: FreqRefSource

Setting Value	Function	Description
1C	FreqRefSource	V/f OLV OLV/PM AOLV/PM EZOLV Shows the selected frequency reference source.

ON : The keypad is the frequency reference source.

OFF : Parameter *b1-01 or b1-15 [Freq. Ref. Sel. 1 or Freq. Ref. Sel. 2]* is the frequency reference source.

■ 1D: RunCmdSource

Setting Value	Function	Description
1D	RunCmdSource	V/f OLV OLV/PM AOLV/PM EZOLV Shows the selected Run command source.

ON : The keypad is the Run command source.

OFF : Parameter *b1-02* or *b1-16* [Run Comm. Sel 1 or Run Comm. Sel 2] is the Run command source.

■ 1E: Motor2 Select

Setting Value	Function	Description
1E	Motor2 Select	V/f OLV OLV/PM AOLV/PM EZOLV The terminal activates when motor 2 is selected.

ON : Motor 2 Selection

OFF : Motor 1 Selection

■ 1F: Restart Enable

Setting Value	Function	Description
1F	Restart Enable	V/f OLV OLV/PM AOLV/PM EZOLV The terminal activates when the Auto Restart function is trying to restart after a fault.

The terminal deactivates when the Auto Restart function automatically resets a fault. The terminal turns off when the Auto Restart function detects the fault again since Auto Restart function cannot function any longer due to number of attempts set with *L5-01 [Auto-Reset Attempts]* being reached.

Note:

Refer to "*L5: FAULT RESTART on page 659*" for more information.

■ 20: FltReset Active

Setting Value	Function	Description
20	FltReset Active	V/f OLV OLV/PM AOLV/PM EZOLV The terminal turns on when the drive receives the Reset command from the control circuit terminal, serial communications, or the communication option.

■ 21: PolePos Detection

Setting Value	Function	Description
21	PolePos Detection	V/f OLV OLV/PM AOLV/PM EZOLV The terminal activates when drive receives a Run command and the drive detects the motor magnetic pole position of the PM motor.

■ 22: Ext 24V Supply

Setting Value	Function	Description
22	Ext 24V Supply	V/f OLV OLV/PM AOLV/PM EZOLV The terminal activates when there is an external 24V power supply between terminals E24V-A0V.

ON : An external 24V power supply supplies power.

OFF : An external 24V power supply does not supply power.

■ 2F: @SpeedSearch

Setting Value	Function	Description
2F	@SpeedSearch	V/f OLV OLV/PM AOLV/PM EZOLV The terminal activates when the drive is doing speed search.

Note:

Refer to "*b3: SPEED SEARCH on page 456*" for more information.

■ 30: @TorqueLimit

Setting Value	Function	Description
30	During Torque Limit	V/f OLV OLV/PM AOLV/PM EZOLV The terminal activates when the torque reference is the torque limit set with *L7 parameters* or *H3-02 or H3-10 [MFAI Function Select]*.

Note:

Refer to "*L7: TORQUE LIMIT on page 666*" for more information.

■ 32: TrqDetect1NO

Setting Value	Function	Description
32	TrqDetect1NO	V/f OLV OLV/PM AOLV/PM EZOLV The terminal activates when the drive detects overtorque or undertorque.

ON : The output current/torque is more than the torque value set with *L6-02 [Trq Det1 Level]*, or the level is less than the torque value set with *L6-02* for longer than the time set with *L6-03 [Trq Det1 Time]*.

Note:

- When *L6-01* ≥ *5*, the drive will detect when the output current/torque is less than the detection level of *L6-02* for longer than the time set in *L6-03*.
- Refer to "*L6: TORQUE DETECTION on page 661*" for more information.

■ 33: TrqDetect1NC

Setting Value	Function	Description
33	TrqDetect1NC	V/f OLV OLV/PM AOLV/PM EZOLV The terminal deactivates when the drive detects overtorque or undertorque.

Use *[L6: TORQUE DETECTION]* parameters to set torque detection.

OFF : The output current/torque is more than the torque value set with *L6-02 [Trq Det1 Level]*, or the level is less than the torque value set with *L6-02* for longer than the time set with *L6-03 [Trq Det1 Time]*.

Note:
- When *L6-01* ≥ *5*, the drive will detect when the output current/torque is less than the detection level of *L6-02* for longer than the time set in *L6-03*.
- Refer to "*L6: TORQUE DETECTION on page 661*" for more information.

■ 37: TrqDetect2NO

Setting Value	Function	Description
37	TrqDetect2NO	V/f OLV OLV/PM AOLV/PM EZOLV The terminal activates when the drive detects overtorque or undertorque.

Use *[L6: TORQUE DETECTION]* parameters to set torque detection.

ON : The output current/torque is more than the torque value set with *L6-05 [Trq Det2 Level]*, or the level is less than the torque value set with *L6-05* for longer than the time set with *L6-06 [Trq Det2 Time]*.

Note:
- When *L6-04* ≥ *5*, the drive will detect when the output current/torque is less than the detection level of *L6-05* for longer than the time set in *L6-06*.
- Refer to "*L6: TORQUE DETECTION on page 661*" for more information.

■ 38: TrqDetect2NC

Setting Value	Function	Description
38	TrqDetect2NC	V/f OLV OLV/PM AOLV/PM EZOLV The terminal deactivates when the drive detects overtorque or undertorque.

Use *[L6: TORQUE DETECTION]* parameters to set torque detection.

OFF : The output current/torque is more than the torque value set with *L6-05 [Trq Det2 Level]*, or the level is less than the torque value set with *L6-05* for longer than the time set with *L6-06 [Trq Det2 Time]*.

Note:
- When *L6-04* ≥ *5*, the drive will detect when the output current/torque is less than the detection level of *L6-05* for longer than the time set in *L6-06*.
- Refer to "*L6: TORQUE DETECTION on page 661*" for more information.

■ 39: Timer Output

Setting Value	Function	Description
39	Timer Output	V/f OLV OLV/PM AOLV/PM EZOLV Use this setting when the drive uses the timer function as an output terminal.

Note:
Refer to "*b4: TIMER on page 464*" for more information.

■ 3C: Comparator 1

Setting Value	Function	Description
3C	Comparator 1	V/f OLV OLV/PM AOLV/PM EZOLV The terminal activates if the monitor value set with *H2-20 [Compare1 Mon.Selection]* is in range of the values of *H2-21 [Compare1 Low Limit] and H2-22 [Compare1 Up Limit]* for the time set in *H2-24 [Compare1 On-Delay Time]*.

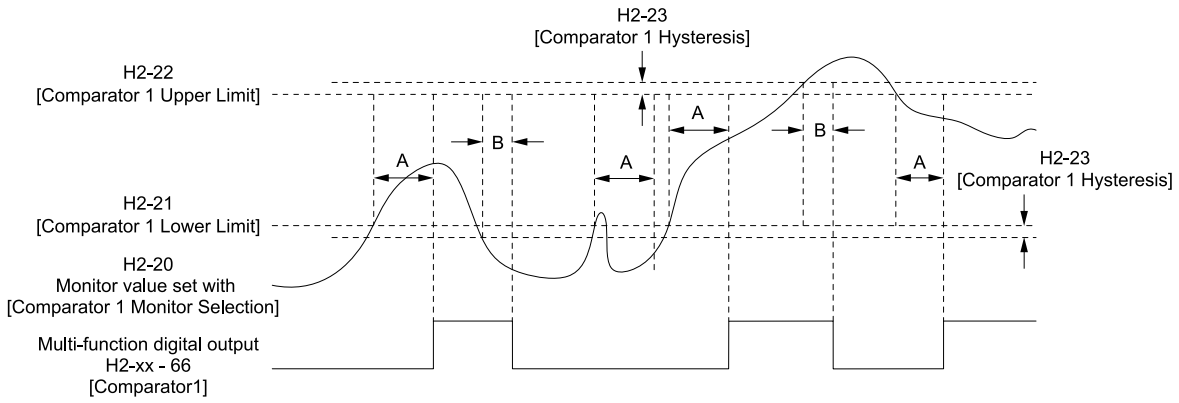

A - H2-24 [Compare1 On-Delay Time]

B - H2-25 [Compare1 Off-Delay Time]

Figure 12.88 Comparator 1 Output Time Chart

Note:

The drive compares the monitors set with *H2-20* as absolute values.

■ 3D: Comparator 2

Setting Value	Function	Description
3D	Comparator 2	V/f OLV OLV/PM AOLV/PM EZOLV The terminal activates if the monitor value set with *H2-26 [Compare2 Mon.Selection]* is not in the range of the values of *H2-27 [Compare2 Low Limit]* and *H2-28 [Compare2 Up Limit]* for the time set in *H2-30 [Compare2 On-Delay Time]*.

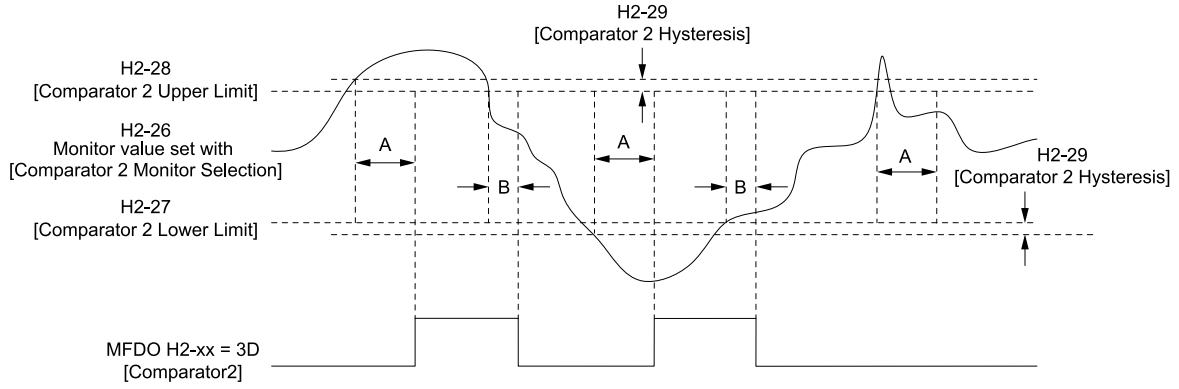

A - H2-30 [Compare2 On-Delay Time]

B - H2-31 [Compare2 Off-Delay Time]

Figure 12.89 Comparator 2 Output Time Chart

Note:

The drive compares the monitors set with *H2-26* as absolute values.

■ 3E: PID Fbk Low

Setting Value	Function	Description
3E	PID Fbk Low	V/f OLV OLV/PM AOLV/PM EZOLV The terminal activates when the drive detects *FbL [PID Feedback Loss]*.

The drive detects *FbL [PID Feedback Loss]* when the PID feedback value < *b5-13 [Fdback Loss Lvl]* for longer than the time set in *b5-14 [Fdback Loss Time]*.

Note:

Refer to “PID Feedback Loss Detection” for more information.

■ 3F: PID Fbk High

Setting Value	Function	Description
3F	PID Fbk High	V/f OLV OLV/PM AOLV/PM EZOLV The terminal activates when the drive detects *FbH [Excessive PID Feedback]*.

The drive detects *FbH [Excessive PID Feedback]* when the PID feedback value > *b5-36 [PID HiHi Limit Level]* for longer than the time set in *b5-37 [PID HiHi Time]*.

Note:

Refer to "PID Feedback Loss Detection" for more information.

■ 4A: DC Bus Undervolt

Setting Value	Function	Description
4A	DC Bus Undervolt	V/f OLV OLV/PM AOLV/PM EZOLV The terminal activates when the DC bus voltage or control circuit power supply is less than the voltage set with *L2-05 [UV Detection Lvl (Uv1)]*. The terminal also turns on when there is a fault with the DC bus voltage.

ON : The DC bus voltage is less than the setting value of *L2-05*.

OFF : The DC bus voltage is more than the setting value of *L2-05*.

■ 4B: FreqRef Loss

Setting Value	Function	Description
4B	FreqRef Loss	V/f OLV OLV/PM AOLV/PM EZOLV The terminal activates when the drive detects a loss of frequency reference.

Note:

Refer to "*L4-05: FrefLoss Det.Selection on page 657*" for more information.

■ 4C: BrkRes Fault

Setting Value	Function	Description
4C	BrkRes Fault	V/f OLV OLV/PM AOLV/PM EZOLV The terminal activates when the mounting-type braking resistor is overheating or when there is a braking transistor fault.

■ 4D: Motor OL1

Setting Value	Function	Description
4D	Motor OL1	V/f OLV OLV/PM AOLV/PM EZOLV The terminal activates when the electronic thermal protection value of the motor overload protective function is a minimum of 90% of the detection level.

Note:

Refer to "*L1-01: Motor Cool Type for OL1 Calc on page 632*" for more information.

■ 4E: Drive PreOH

Setting Value	Function	Description
4E	Drive PreOH	V/f OLV OLV/PM AOLV/PM EZOLV The terminal activates when the drive heatsink temperature is at the level set with *L8-02 [Overheat Alm Level]*.

Note:

Refer to "*L8-02: Overheat Alm Level on page 669*" for more information.

■ 4F: PreOHTimeLim

Setting Value	Function	Description
4F	PreOHTimeLim	V/f OLV OLV/PM AOLV/PM EZOLV The terminal activates when *L8-03 = 4 [Overheat Pre-Alarm Selection = Run@L8-19 Rate]* and *oH [Heatsink Overheat]* does not clear after the drive decreases the frequency for 10 cycles.

Note:

Refer to "*L8-03: Overheat Pre-Alarm Selection on page 669*" for more information.

■ 60: BrkTransFault

Setting Value	Function	Description
60	BrkTransFault	V/f OLV OLV/PM AOLV/PM EZOLV The terminal activates when the internal braking transistor overheats and the drive detects an *rr [Dynamic Braking Transistor Fault]* fault.

■ 61: BrkTransOH

Setting Value	Function	Description
61	BrkTransOH	V/f OLV **OLV/PM** AOLV/PM EZOLV The terminal activates when the braking resistor overheats and the drive detects an *rH [Braking Resistor Overheat]* fault.

The braking resistor overheats when the deceleration time is short and there is too much motor regeneration energy.

■ 63: Maintenance

Setting Value	Function	Description
63	Maintenance	V/f OLV **OLV/PM** AOLV/PM EZOLV The terminal activates when drive components are at their estimated maintenance period.

Tells the user about the maintenance period for these items:

- IGBT
- Cooling fan
- Capacitor
- Soft charge bypass relay

Note:

Refer to “Alarm Outputs for Maintenance Monitors” for more information.

■ 65: WattH Pulse

Setting Value	Function	Description
65	WattH Pulse	V/f OLV **OLV/PM** AOLV/PM EZOLV Outputs the pulse that shows the watt hours.

Note:

Refer to “*H2-06: kWH Out Unit Selection on page 589*” for more information.

■ 66: MechWeakDetect

Setting Value	Function	Description
66	MechWeakDetect	V/f OLV **OLV/PM** AOLV/PM EZOLV The terminal activates when the drive detects mechanical weakening.

Note:

Refer to “Mechanical Weakening Detection Function” for more information.

■ 67: ModbusReg 1

Setting Value	Function	Description
67	ModbusReg 1	V/f OLV **OLV/PM** AOLV/PM EZOLV The terminal activates when the bit specified by *H2-08 [Mbus Reg1 Bit Select]* for the Modbus register address set with *H2-07 [Mbus Reg1 Address Select]* activates.

■ 69: ModbusReg 2

Setting Value	Function	Description
69	ModbusReg 2	V/f OLV **OLV/PM** AOLV/PM EZOLV The terminal activates when the bit specified by *H2-10 [Mbus Reg2 Bit Select]* for the Modbus register address set with *H2-09 [Mbus Reg2 Address Select]* activates.

■ 6A: DataLog Error

Setting Value	Function	Description
6A	DataLog Error	V/f OLV **OLV/PM** AOLV/PM EZOLV The terminal activates when the drive detects *LoG [Com Error / Abnormal SD card]*.

■ 90 to 92: Q2pack DO1 to 3

Setting Value	Function	Description
90 - 92	Q2pack DO1 to 3	V/f OLV OLV/PM AOLV/PM EZOLV Sets the Q2pack digital output. Refer to the Q2pack online manual for more information.

■ 100 to 192: Inverse output of 0 to 92

Setting Value	Function	Description
100 - 192	Inverse output of 0 to 92	V/f OLV OLV/PM AOLV/PM EZOLV Causes inverse output of the function for the selected MFDO. Uses the last two digits of 1xx to select which function to inversely output.

For example, set *H2-xx = 103* for the inverse output of *3 [Fault]*.

◆ H3: ANALOG INPUTS

WARNING! *Sudden Movement Hazard. Do test runs and examine the drive to make sure that the command references are correct. If you set the command reference incorrectly, it can cause damage to the drive or serious injury or death.*

Drives have two analog input terminals: terminals AI1 and AI2. Use *H3 parameters* to set the functions to these analog input terminals and adjust signal levels.

This table shows the functions that you can set to analog input terminals. Use *H3-02 and H3-10 [MFAI Function Select]* to set functions.

Table 12.47 MFAI Setting Values

Setting Value	Function	Reference	Setting Value	Function	Reference
0	Through Mode	614	D	GenerTrqLim	617
1	AuxFreqRef1	614	E	OvUntrq Level	617
2	AuxFreqRef2	614	F	PID Fbk	617
3	FrqBIAS Frq	614	10	PID SetPoint	617
4	Freq Ref/BIAS	614	11	Diff PIDFbk	617
5	Freq Gain	615	12	AcDcTimeGain	618
6	OutVolt Bias	615	13	DCInjBrakCurr	618
7	TorqCompensation	615	14	StallPLev@Rn	618
8	TorqRef/Lim	615	15	OutFLowLimSel	619
9	FW Trq Lim	615	16	Mot PTC Input	619
B	Rev Trq Lim	617	30	Q2pack AI1	619
C	RegenTrqLim	617	31	Q2pack AI2	619

Note:

All analog input scaling uses gain and bias for adjustment. Set the gain and bias values correctly.

Example Analog Input Settings	Terminal AI1 Setting	Frequency Reference
Frequency Reference When You Adjust the Gain Setting	• H3-02 = 1 [AI1 Function Selection= AuxFreqRef1] • H3-03 = 200.0 [AI1 Gain Setting = 200%] • H3-04 = 0.0 [AI1 Bias Setting = 0.0%]	• When you input a 10 V signal, the frequency reference will be 200%. • When you input a 5 V signal, the frequency reference will be 100%. When you input a 5 V or more signal, *E1-04 [Max Output Frequency]* will limit the drive output and the frequency reference will be 100%. H3-01 = 0.1 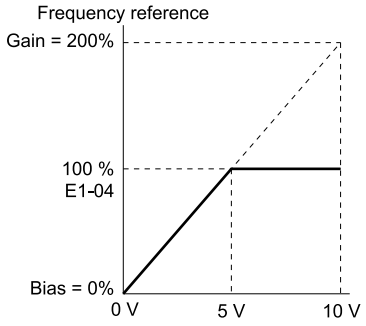
Frequency Reference When You Set the Bias to a Negative Number	• H3-02 = 1 [AuxFreqRef1] • H3-03 = 100.0 [100.0%] • H3-04 = -25.0 [-25.0%]	• When you input a 0 V signal, the frequency reference will be -25%. • When *H3-01 = 0 [AI1 Signal Level Select = 0 to 10V (Lower Limit at 0)]* – When you input a 0 V to 2 V signal, the frequency reference will be 0%. – When you input a 2 V to 10 V signal, the frequency reference will be 0% to 100%. • When *H3-01 = 1 [0 to +10 V (Without Lower Limit)]* – When you input a 0 V to 2 V signal, it enables signals of positive and negative polarities and the motor rotates in reverse. H3-01 = 0 H3-01 = 1 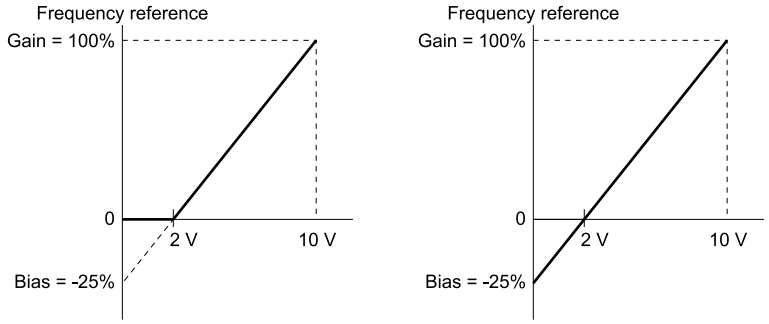

■ Modbus Multi-Function AI1 to 3 Function Selection

You can set the MFAI function to Modbus register*15C1 to 15C3 (Hex.) [Mbus Reg 15C1h through 15C3h Input Function]*. Use *H3-40 to H3-42 [15C1h Input Function to 15C3h Input Function]* to set the function and use *H3-43 [Mbus In FilterTime Const]* to set the input filter.

Table 12.48 Modbus Multi-Function AI Command Register

Register No. (Hex.)	Name	Range *1	Parameter
15C1	Mbus Reg 15C1h Input Function	-32767 - +32767	H3-40
15C2	Mbus Reg 15C2h Input Function	-32767 - +32767	H3-41
15C3	Mbus Reg 15C3h Input Function	-32767 - +32767	H3-42

*1 Set as 100% = 4096.

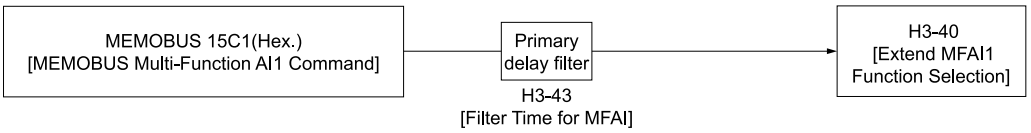

Figure 12.90 Functional Block Diagram for Modbus Multi-Function AI Command 1

Note:
- Refer to *H3: ANALOG INPUTS on page 609* for the analog input setting values.
- When you will not use the terminal, set *H3-40 to H3-42 = 0*. The through mode function is not supported.
- You cannot use *H3-40 to H3-42* to set these MFAI terminals:

H3-xx Setting Value	Function
1	AuxFreqRef1
2	AuxFreqRef2
4	Freq Ref/BIAS
5	Freq Gain
30	Q2pack AI1
31	Q2pack AI2

■ H3-01: AI1 Signal Level Select

No. (Hex.)	Name	Description	Default (Range)
H3-01 (0410)	AI1 Signal Level Select	V/f OLV OLV/PM AOLV/PM EZOLV Sets the input signal level for MFAI terminal AI1.	0 (0, 1)

0 : 0 to 10V (Lower Limit at 0)

The voltage signal is 0 Vdc to 10 Vdc. The minimum input level limit is 0%. The drive will read a negative input signal caused by gain and bias settings as 0%.

1 : 0 to +10 V (Without Lower Limit)

The voltage signal is 0 Vdc to 10 Vdc. When this setting is used as the frequency reference, the motor runs reverse when the Forward run command is input, or runs forward when the Reverse run signal is input, while the signal is a negative number due to gain and bias.

■ H3-02: AI1 Function Selection

No. (Hex.)	Name	Description	Default (Range)
H3-02 (0434)	AI1 Function Selection	V/f OLV OLV/PM AOLV/PM EZOLV Sets the function for MFAI terminal AI1.	0 (0 - 32)

■ H3-03: AI1 Gain Setting

No. (Hex.)	Name	Description	Default (Range)
H3-03 (0411) RUN	AI1 Gain Setting	V/f OLV OLV/PM AOLV/PM EZOLV Sets the gain of the analog signal input to MFAI terminal AI1.	100.0% (-999.9 - +999.9%)

This parameter sets the quantity of reference for the function set for terminal AI1 as a percentage when 10 V (or 20 mA) is input.

Use this parameter and *H3-04 [AI1 Bias Setting]* to adjust the characteristics of the analog input signal to terminal AI1.

■ H3-04: AI1 Bias Setting

No. (Hex.)	Name	Description	Default (Range)
H3-04 (0412) RUN	AI1 Bias Setting	V/f OLV OLV/PM AOLV/PM EZOLV Sets the bias of the analog signal input to MFAI terminal AI1.	0.0% (-999.9 - +999.9%)

This parameter sets the bias for the function set for terminal AI1 as a percentage when 0 V (4 mA or 0 mA) is input.

Use this parameter and *H3-03 [AI1 Gain Setting]* to adjust the characteristics of the analog input signal to terminal AI1.

■ H3-09: AI2 Signal Level Select

No. (Hex.)	Name	Description	Default (Range)
H3-09 (0417)	AI2 Signal Level Select	V/f OLV OLV/PM AOLV/PM EZOLV Sets the input signal level for MFAI terminal AI2.	2 (0 - 3)

0 : 0 to 10V (Lower Limit at 0)

The voltage signal is 0 Vdc to 10 Vdc. The minimum input level limit is 0%. The drive will read a negative input signal caused by gain and bias settings as 0%.

1 : 0 to +10V (Without Lower Limit)

The voltage signal is 0 Vdc to 10 Vdc. When this setting is used as the frequency reference, the motor runs reverse when the Forward run command is input, or runs forward when the Reverse run signal is input, while the signal is a negative number due to gain and bias.

2 : 4 to 20 mA

The current signal is 4 mA to 20 mA. The minimum input level is limited to 0%, so that a negative input signal due to gain and bias settings will be read as 0%.

3 : 0 to 20 mA

The current signal is 0 mA to 20 mA. The minimum input level is limited to 0%, so that a negative input signal due to gain and bias settings will be read as 0%.

Note:

When *H3-09 = 0, 1*, set DIP switch S1 to the V side (voltage). When *H3-09 = 2, 3*, set DIP switch S1 to the I side (current). The default setting is the I side (current).

■ H3-10: AI2 Function Selection

No. (Hex.)	Name	Description	Default (Range)
H3-10 (0418)	AI2 Function Selection	V/f OLV OLV/PM AOLV/PM EZOLV Sets the function for MFAI terminal AI2.	0 (0 - 32)

■ H3-11: AI2 Gain Setting

No. (Hex.)	Name	Description	Default (Range)
H3-11 (0419) RUN	AI2 Gain Setting	V/f OLV OLV/PM AOLV/PM EZOLV Sets the gain of the analog signal input to MFAI terminal AI2.	100.0% (-999.9 - +999.9%)

When 10 V (or 20 mA) is input, this parameter sets the reference quantity for the function set for terminal AI2 as a percentage.

Use this parameter and *H3-12 [AI2 Bias Setting]* to adjust the characteristics of the analog input signal to terminal AI2.

■ H3-12: AI2 Bias Setting

No. (Hex.)	Name	Description	Default (Range)
H3-12 (041A) RUN	AI2 Bias Setting	V/f OLV OLV/PM AOLV/PM EZOLV Sets the bias of the analog signal input to MFAI terminal AI2.	0.0% (-999.9 - +999.9%)

When 0 V (4 mA or 0 mA) is input, this parameter sets the bias for the function set for terminal AI2 as a percentage.

Use this parameter and *H3-11 [AI2 Gain Setting]* to adjust the characteristics of the analog input signal to terminal AI2.

■ H3-13: An.In FilterTime Constant

No. (Hex.)	Name	Description	Default (Range)
H3-13 (041B)	An.In FilterTime Constant	V/f OLV OLV/PM AOLV/PM EZOLV Sets the time constant for primary delay filters on MFAI terminals.	0.03 s (0.00 - 2.00 s)

Apply the primary delay filter to the analog input to enable an analog input signal without the use of high-frequency noise components. An analog input filter prevents irregular drive control. Drive operation becomes more stable as the programmed time becomes longer, but it also becomes less responsive to quickly changing analog signals.

■ H3-14: An.In Term.Enable Sel

No. (Hex.)	Name	Description	Default (Range)
H3-14 (041C)	An.In Term.Enable Sel	V/f OLV OLV/PM AOLV/PM EZOLV Sets the enabled terminal or terminals when *H1-xx = 12 [MFDI Function Select = AI Input Sel]* is ON.	3 (1, 2, 3)

Input signals do not have an effect on terminals not set as targets.

1 : AI1 only

2 : AI2 only

3 : AI1 and AI2

Note:

- The ON/OFF operation of terminal DIx set in *AI Input Sel [H1-xx = 12]* has an effect on only the analog input terminal selected with *H3-14*.
- When *H1-xx ≠ 12*, the functions set to terminals AI1 and AI2 are always enabled.

■ H3-16: AI1 Offset

No. (Hex.)	Name	Description	Default (Range)
H3-16 (02F0)	AI1 Offset	V/f OLV OLV/PM AOLV/PM EZOLV Sets the offset level for analog signals input to terminal AI1. Usually it is not necessary to change this setting.	0 (-500 - +500)

Adds the offset value for the analog input value. For voltage input, this parameter will set the offset when a signal of 0 V is input.

■ H3-17: AI2 Offset

No. (Hex.)	Name	Description	Default (Range)
H3-17 (02F1)	AI2 Offset	V/f OLV OLV/PM AOLV/PM EZOLV Sets the offset level for analog signals input to terminal AI2. Usually it is not necessary to change this setting.	0 (-500 - +500)

Adds the offset value for the analog input value. For voltage input, this parameter will set the offset when a signal of 0 V is input. For current input, this parameter will set the offset when a signal of *4 mA [H3-09 = 2]* or *0 mA [H3-09 = 3]* is input.

■ H3-40: 15C1h Input Function

No. (Hex.)	Name	Description	Default (Range)
H3-40 (0B5C)	15C1h Input Function	V/f OLV OLV/PM AOLV/PM EZOLV Sets the Modbus AI1 function.	0 (0, 3, 6 - 2F)

You can use the MFAI function from Modbus communications. Use this parameter to set the function. Sets the input for the function in Modbus register 15C1.

Refer to *H3: ANALOG INPUTS on page 609* for the setting values.

■ H3-41: 15C2h Input Function

No. (Hex.)	Name	Description	Default (Range)
H3-41 (0B5F)	15C2h Input Function	V/f OLV OLV/PM AOLV/PM EZOLV Sets the Modbus AI2 function.	0 (0, 3, 6 - 2F)

You can use the MFAI function from Modbus communications. Use this parameter to set the function. Sets the input for the function in Modbus register 15C2.

Refer to *H3: ANALOG INPUTS on page 609* for the setting values.

■ H3-42: 15C3h Input Function

No. (Hex.)	Name	Description	Default (Range)
H3-42 (0B62)	15C3h Input Function	V/f OLV OLV/PM AOLV/PM EZOLV Sets the Modbus AI3 function.	0 (0, 3, 6 - 2F)

You can use the MFAI function from Modbus communications. Use this parameter to set the function. Sets the input for the function in Modbus register 15C3.

Refer to *H3: ANALOG INPUTS on page 609* for the setting values.

■ H3-43: Mbus In FilterTime Const

No. (Hex.)	Name	Description	Default (Range)
H3-43 (117F)	Mbus In FilterTime Const	V/f OLV OLV/PM AOLV/PM EZOLV Sets the time constant to apply a primary delay filter to the Modbus analog input terminal.	0.00 s (0.00 - 2.00 s)

◆ MFAI Setting Values

This section gives information about the functions set with *H3-02 and H3-10*.

■ 0: Through Mode

Setting Value	Function	Description
0	Through Mode	V/f OLV OLV/PM AOLV/PM EZOLV Use this setting for unused terminals or to use terminals in through mode.

When you set a terminal that is not in use to 0, you can use the signal input to the terminal as PLC analog signal input through Modbus communications or the communication option. This input signal does not have an effect on drive operation. This functions the same as setting 100 (Through Mode).

■ 1: AuxFreqRef1

Setting Value	Function	Description
1	AuxFreqRef1	V/f OLV OLV/PM AOLV/PM EZOLV Sets Reference 2 through multi-step speed reference to enable the command reference (Auxiliary Frequency Reference 1) from the analog input terminal set here. This value is a percentage where the Maximum Output Frequency setting is a setting value of 100%.

■ 2: AuxFreqRef2

Setting Value	Function	Description
2	AuxFreqRef2	V/f OLV OLV/PM AOLV/PM EZOLV Sets Reference 3 through multi-step speed reference to enable the command reference (Auxiliary Frequency Reference 2) from the analog input terminal set here. This value is a percentage where the Maximum Output Frequency setting is a setting value of 100%.

■ 3: FrqBIAS Frq

Setting Value	Function	Description
3	FrqBIAS Frq	V/f OLV OLV/PM AOLV/PM EZOLV Enters the bias value added to the frequency reference as a percentage of the maximum output frequency.

The drive adds the input value from the MFAI terminal set with this function to the frequency reference as the bias value.

Note:

When you select *d1-01 to d1-16 or d1-17 [Reference 1 to 16 or Jog Reference]* as the frequency reference, it will disable this function.

■ 4: Freq Ref/BIAS

Setting Value	Function	Description
4	Freq Ref/BIAS	V/f OLV OLV/PM AOLV/PM EZOLV The input value from the MFAI terminal set with this function becomes the master frequency reference.

- You can copy the configuration to more than one of the analog input terminals AI1 and AI2. When you set more than one analog input terminal with the master frequency reference, the sum value becomes the frequency bias.

- If you use this function to set the analog input value as the master frequency reference, set *b1-01 = 1 [Freq. Ref. Sel. 1 = Analog Input]*. This setting value is the default value for terminals AI1 and AI2.
- The frequency reference is the sum of the input values for terminals AI1 and AI2 when they are used at the same time. For example, when a 20% bias is input to terminal AI2 while a frequency reference of 50% is input from terminal AI1, the calculated frequency reference will be 70% of the maximum output frequency.

■ 5: Freq Gain

Setting Value	Function	Description
5	Freq Gain	V/f OLV OLV/PM AOLV/PM EZOLV The drive multiplies the analog frequency reference with the input value from the MFAI set with this function.

Example: When you set frequency gain for terminal AI2

- *H3-10 = 5 [AI2 Function Selection = Freq Gain]*
- A 50% frequency gain is input to terminal AI2
- A frequency reference of 80% is input from terminal AI1

The calculated frequency reference is 40% of the maximum output frequency.

■ 6: OutVolt Bias

Setting Value	Function	Description
6	Output Voltage Bias	V/f OLV OLV/PM AOLV/PM EZOLV Set this parameter to input a bias signal to amplify the output voltage.

The gain (%) for the MFAI terminals AI1 and AI2 is 100% of the voltage class standard, which is 200 V for 200 V class drives and 400 V for 400 V class drives. The bias (%) for MFAI terminals AI1 and AI2 is 100% of the voltage configured for *E1-05 [Max Output Voltage]*.

Note:

The gain for each terminal AI1 and AI2 is set independently with *H3-03 [AI1 Gain Setting] and H3-11 [AI2 Gain Setting]*. The bias for each terminal AI1 and AI2 is set independently with *H3-04 [AI1 Bias Setting] and H3-12 [AI2 Bias Setting]*.

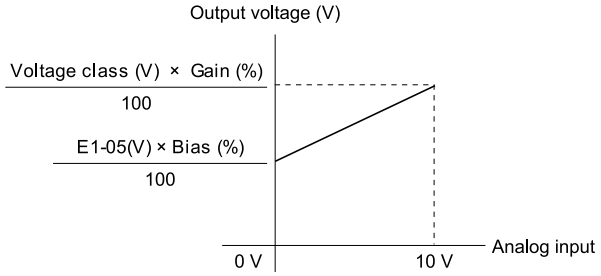

Figure 12.91 Output Voltage Bias through Analog Input

■ 7: TorqCompensation

Setting Value	Function	Description
7	TorqCompensation	V/f OLV OLV/PM AOLV/PM EZOLV Enters the torque compensation value if the motor rated torque is 100%.

■ 8: TorqRef/Lim

Setting Value	Function	Description
8	TorqRef/Lim	V/f OLV OLV/PM AOLV/PM EZOLV Enters the torque reference if the motor rated torque is 100%. This setting is the torque limit for speed control.

Note:

When you use *L7-01 to L7-04* and analog inputs to set torque limits for the same quadrant, it will enable the lower torque limit.

■ 9: FW Trq Lim

Setting Value	Function	Description
9	FW Trq Lim	V/f OLV OLV/PM AOLV/PM EZOLV Enters the forward torque limit if the motor rated torque is 100%.

WARNING! *Sudden Movement Hazard. Set correct torque limits for applications, for example elevator applications. If you set torque limits incorrectly, motor torque that is not sufficient can cause damage to equipment and cause serious injury or death.*

Torque Limit Configuration Method

Use one of these methods to set torque limits:

- Individually set the four torque limit quadrants using *L7-01 to L7-04 [Torque Limit]*.
- Use MFAI to individually set the four torque limit quadrants. Set *H3-02, H3-10 = 9, B, C [MFAI Function Select = FW Trq Lim, Rev Trq Lim, RegenTrqLim]*.
- Use MFAI to set all four torque limit quadrants together. Set *H3-02, H3-10 = D [GenerTrqLim]*.
- Use a communication option to set all four torque limit quadrants together.

Figure 12.92 shows the configuration method for each quadrant.

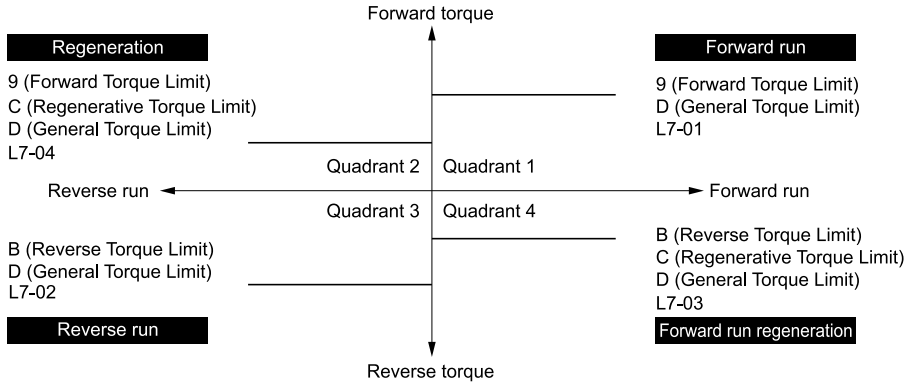

Figure 12.92 Torque Limits and Analog Input Setting Parameters

Note:

- When *L7-01 to L7-04* and analog inputs or communication option torque limits set torque limits for the same quadrant, the lower value is enabled.
  In this example of parameter settings, the torque limit for quadrant 1 is 130% and the torque limit for quadrants 2, 3, and 4 is 150%.
  Settings: *L7-01 = 130%*, *L7-02 to L7-04 = 200%*, and MFAI torque limit = 150%
- The drive output current limits maximum output torque. The torque limit is 150% of the rated output current for HD and to 120% of the rated output current for ND. The actual output torque is not more than the limits of the drive rated output current when you set the torque limit to a high value.

If you use drives in applications where the vertical axis can fall, make sure that you know these items:

- Correctly configure drives and motors.
- Correctly set parameters.
- You can change parameter values after you do Auto-Tuning.
- Use a system that will not let the vertical axis fall if the drive fails.

Figure 12.93 shows the relation between torque limits from parameters and torque limits from analog input.

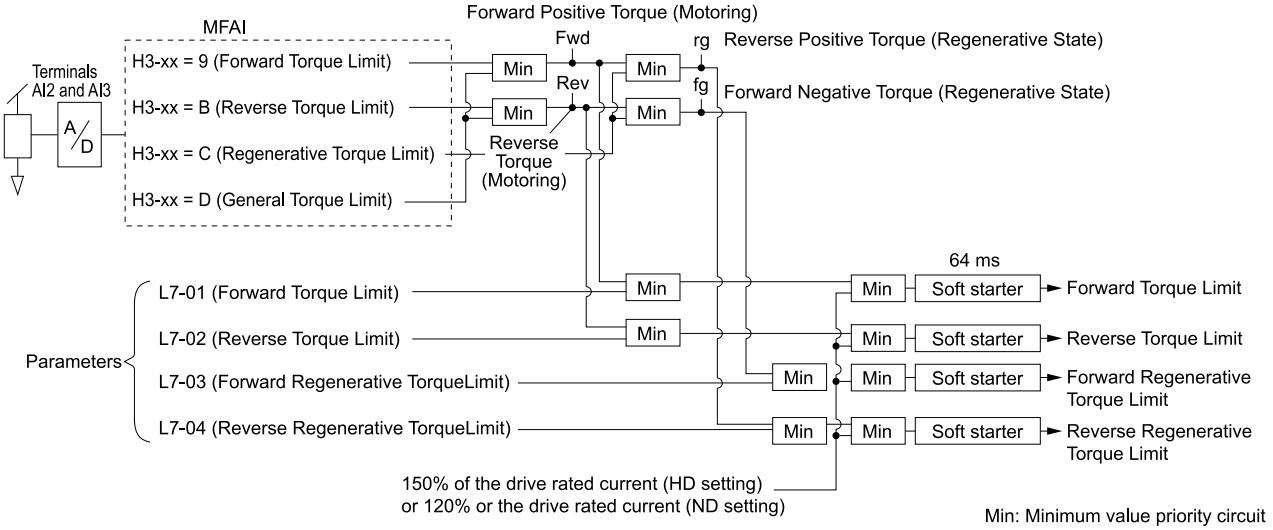

Figure 12.93 Torque Limits from Parameters and Analog Inputs

■ B: Rev Trq Lim

Setting Value	Function	Description
B	Rev Trq Lim	V/f OLV OLV/PM AOLV/PM EZOLV Enters the load torque limit if the motor rated torque is 100%.

Note:
When you use *L7-01 to L7-04* and analog inputs to set torque limits for the same quadrant, it will enable the lower torque limit.

■ C: RegenTrqLim

Setting Value	Function	Description
C	RegenTrqLim	V/f OLV OLV/PM AOLV/PM EZOLV Enters the regenerative torque limit if the motor rated torque is 100%.

Note:
When you use *L7-01 to L7-04* and analog inputs to set torque limits for the same quadrant, it will enable the lower torque limit.

■ D: GenerTrqLim

Setting Value	Function	Description
D	GenerTrqLim	V/f OLV OLV/PM AOLV/PM EZOLV Enters the torque limit that is the same for all quadrants for forward, reverse, and regenerative operation if the motor rated torque is 100%.

■ E: OvUntrq Level

Setting Value	Function	Description
E	OvUntrq Level	V/f OLV OLV/PM AOLV/PM EZOLV Enters a signal to adjust the overtorque/undertorque detection level.

When *A1-02 = 0, 5 [Control Method = V/f Control, PM OLVector]*, the drive rated current is 100%. When *A1-02 = 2, 6, 8 [OLVector, PM AOLVector, or EZ Vector]*, the motor rated current is 100%.

Note:
Use this function with *L6-01 [Trq Det1 Select]*. This parameter functions as an alternative to *L6-02 [Trq Det1 Level]*.

■ F: PID Fbk

Setting Value	Function	Description
F	PID Fbk	V/f OLV OLV/PM AOLV/PM EZOLV Enter the PID feedback value as a percentage of the maximum output frequency.

When you use this function, set *b5-01 = 1 [PID Enable = Enabled]*.

■ 10: PID SetPoint

Setting Value	Function	Description
10	PID SetPoint	V/f OLV OLV/PM AOLV/PM EZOLV Enters the PID setpoint as a percentage of the maximum output frequency.

When you use this function, set *b5-01 = 1 [PID Enable = Enabled]*.

Note:
Configuring this function disables the frequency reference set with *b1-01 [Freq. Ref. Sel. 1]*.

■ 11: Diff PIDFbk

Setting Value	Function	Description
11	Diff PIDFbk	V/f OLV OLV/PM AOLV/PM EZOLV Enters the PID differential feedback value if the full scale analog signal (10 V or 20 mA) is 100%.

The drive uses the deviation between the PID feedback and the differential feedback value signals to calculate the PID input.

■ 12: AcDcTimeGain

Setting Value	Function	Description
12	AcDcTimeGain	V/f OLV OLV/PM AOLV/PM EZOLV Enters a signal to adjust the gain used for *C1-01 to C1-08 [Acceleration/Deceleration Times 1 to 4]* and *C1-09 [Fast Stop Time]* when the full scale analog signal (10 V or 20 mA) is 100%.

When you enable *C1-01 [Accel Time 1]*, the acceleration time is:
Acceleration Time 1 = Setting value of *C1-01* × acceleration and deceleration time gain / 100

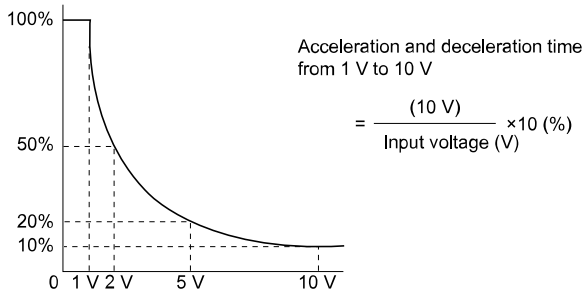

Figure 12.94 Acceleration/Deceleration Time Gain through Analog Input

■ 13: DCInjBrakCurr

Setting Value	Function	Description
13	DCInjBrakCurr	V/f OLV OLV/PM AOLV/PM EZOLV Enters a signal to adjust the current level used for DC Injection Braking when the drive rated output current is 100%.

Note:
When you set this function, it will disable the setting value of *b2-02 [DCI Braking Current]*.

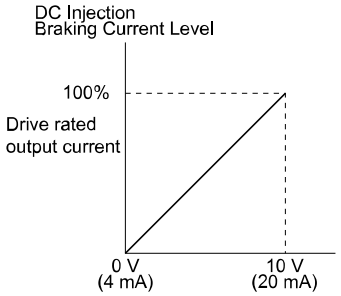

Figure 12.95 DC Injection Braking Current through Analog Input

■ 14: StallPLev@Rn

Setting Value	Function	Description
14	StallPLev@Rn	V/f OLV OLV/PM AOLV/PM EZOLV Enters a signal to adjust the stall prevention level during run if the drive rated current is 100%.

Note:
The drive will use the smaller value of these values for Stall Prevent Level during Run:
• Multi-function analog input terminal analog input value
• *L3-06 [StallP Level@Run]*

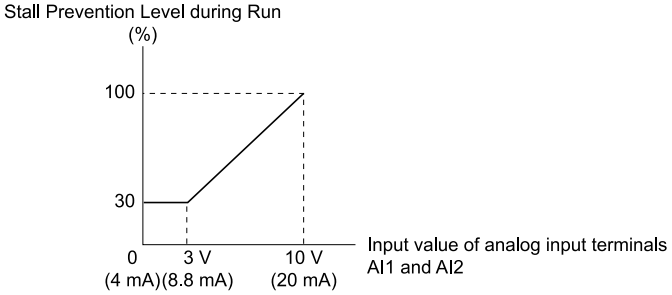

Figure 12.96 Stall Prevention Level during Run with Analog Input

■ 15: OutFLowLimSel

Setting Value	Function	Description
15	OutFLowLimSel	V/f OLV OLV/PM AOLV/PM EZOLV Enters a signal to adjust the output frequency lower limit level as a percentage of the maximum output frequency.

■ 16: Mot PTC Input

Setting Value	Function	Description
16	Mot PTC Input	V/f OLV OLV/PM AOLV/PM EZOLV Uses the motor Positive Temperature Coefficient (PTC) thermistor to prevent heat damage to the motor as a percentage of the current value when the 10 V analog signal is input.

- You can use the Positive Temperature Coefficient (PLC) thermistor as an auxiliary or alternative detection function for *oL1 [Motor Overload]* problems to help prevent heat damage to motors. If the PTC input signal is more than the overload alarm level, *oH3 [Motor Overheat (PTC Input)]* will flash on the keypad.
- If the drive detects *oH3*, the motor stops with the method set in *L1-03*. If the drive detects *oH4*, the motor stops with the method set in *L1-04*. If the drive incorrectly detects motor overheating problems, set *L1-05*.

■ 30: Q2pack AI1

Setting Value	Function	Description
30	Q2pack AI1	V/f OLV OLV/PM AOLV/PM EZOLV Use with Q2pack. Refer to the Q2pack online manual for more information.

■ 31: Q2pack AI2

Setting Value	Function	Description
31	Q2pack AI2	V/f OLV OLV/PM AOLV/PM EZOLV Use with Q2pack. Refer to the Q2pack online manual for more information.

◆ H4: ANALOG OUTPUTS

H4 parameters set the drive analog monitors. These parameters select monitor parameters, adjust gain and bias, and select output signal levels.

■ Calibrate Meters Connected to MFAO Terminal AO

Use these parameters to calibrate meters connected to terminal AO:

- H4-02 [AO An.Out Gain]
- H4-03 [AO An.Out Bias]

Set these parameters where the output voltage of 10 V and output current of 20 mA are 100% of the signal level. Use jumper switch *S5* and parameter *H4-07 [AO Signal Level Select]* to set the voltage output and current output.

No.	Name	Range	Default
H4-02	AO An.Out Gain	-999.9 - +999.9%	100.0%
H4-03	AO An.Out Bias	-999.9 - +999.9%	0.0%
H4-07	AO Signal Level Select	1: 0 - 10 VDC 3: 4 - 20 mA	1

Figure 12.97 and Figure 12.98 show the gain and bias.

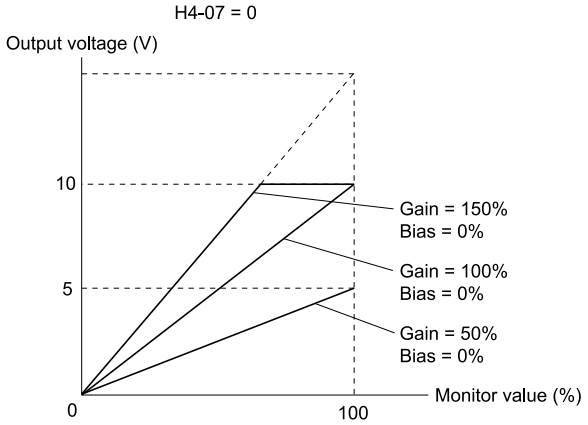

Figure 12.97 Analog Output Gain/Bias Configuration Example 1

For example, when the parameter value set to analog output is 0, and a 3 V signal is to be output to terminal AO, set *H4-03 [AO An.Out Bias] = 30%*.

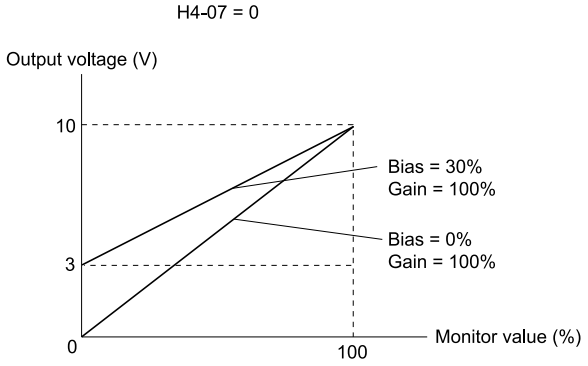

Figure 12.98 Analog Output Gain/Bias Configuration Example 2

Calibrate Terminal AM

Stop the drive to calibrate meters. Use this procedure to calibrate:

1. Show *H4-02 [AO An.Out Gain]* on the keypad.
   Terminal AM outputs the analog signal when the monitor item that you set in *H4-01 [AO An.Out Select]* is 100%.
2. Adjust *H4-02* while referencing the meter scale connected to terminal AM.
3. Show *H4-03 [AO An.Out Bias]* on the keypad.
   The analog signal at the time when the monitor item selected with *H4-01* is 0% is output from terminal AO.
4. Adjust *H4-03* while referencing the meter scale connected to terminal AO.

■ H4-01: AO An.Out Select

No. (Hex.)	Name	Description	Default (Range)
H4-01 (041D)	AO An.Out Select	V/f OLV OLV/PM AOLV/PM EZOLV Sets the monitoring number to be output from the MFAO terminal AM.	102 (000 - 999)

Set the *x-xx* part of the *Ux-xx [Monitor]*. For example, set *H4-01 = 102* to monitor *U1-02 [Output Frequency]*.

Note:
- You cannot use all of the monitors in all of the control methods.
- When you use the terminal in through mode, set this parameter to *000* or *031*. You can set the terminal AO output level from the PLC through Modbus communications or the communication option.

■ H4-02: AO An.Out Gain

No. (Hex.)	Name	Description	Default (Range)
H4-02 (041E) RUN	AO An.Out Gain	V/f OLV OLV/PM AOLV/PM EZOLV Sets the gain of the monitor signal that is sent from MFAO terminal AO.	100.0% (-999.9 - +999.9%)

The analog signal output from the AO terminal is a maximum of ±10 V (or 20 mA). Set the signal level with *H4-07 [AO Signal Level Select]*.

■ H4-03: AO An.Out Bias

No. (Hex.)	Name	Description	Default (Range)
H4-03 (041F) RUN	AO An.Out Bias	V/f OLV OLV/PM AOLV/PM EZOLV Sets the bias of the monitor signal that is sent from MFAO terminal AO.	0.0% (-999.9 - +999.9%)

The analog signal output from the AO terminal is a maximum of ±10 V (or 20 mA). Use *H4-07 [AO Signal Level Select]* to set the signal level.

■ H4-07: AO Signal Level Select

No. (Hex.)	Name	Description	Default (Range)
H4-07 (0423)	AO Signal Level Select	V/f OLV OLV/PM AOLV/PM EZOLV Sets the MFAO terminal AO output signal level.	1 (1, 3)

Note:

Make sure that you set jumper S5 on the control circuit terminal board when you change these parameters.

1 : 0 to 10 Vdc

3 : 4 to 20 mA

■ H4-20: An.Pwr Mon 100% Level

No. (Hex.)	Name	Description	Default (Range)
H4-20 (0B53)	An.Pwr Mon 100% Level	V/f OLV OLV/PM AOLV/PM EZOLV Sets the level at 10 V when *U1-08 [Output Power]* is set for analog output.	0.00 kW (0.00 - 650.00 kW)

Note:

- When *H4-20 = 0.00 kW*, the output power monitor 10 V level = motor rated power (kW). The setting changes when the *A1-02 [Control Method]* value changes:
  - *A1-02 = 0 [V/f Control]*: *E2-11 [Motor Rated Power (kW)]*
  - *A1-02 = 2 [OLVector]*: *E2-11 [Motor Rated Power (kW)]*
  - *A1-02 = 5, 6 [PM OLVector, PM AOLVector]*: *E5-02 [PM Mot Rated Power (kW)]*
  - *A1-02 = 8 [EZ Vector]*: *E9-07 [Motor Rated Power (kW)]*

◆ H5: MODBUS PORTS

H5 parameters configure the drive to use Modbus communications.

You can use the Modbus protocol over the RS-485 port (terminals RS485+ and RS485-) in the drive to use serial communication with programmable controllers (PLC).

■ H5-01: Mbus Address

No. (Hex.)	Name	Description	Default (Range)
H5-01 (0425)	Mbus Address	V/f OLV OLV/PM AOLV/PM EZOLV Sets the communication slave address for drives.	1FH (0 - FFH)

Note:

- Restart the drive after changing the parameter setting.
- Setting 0 will not let the drive respond to Modbus communications.

To enable the drive to communicate with the controller (master) over Modbus communications, you must set the drive with a slave address. Set *H5-01 ≠ 0*.

Set a slave address that is different from other slave devices.

■ H5-02: Mbus BaudRate

No. (Hex.)	Name	Description	Default (Range)
H5-02 (0426)	Mbus BaudRate	V/f OLV OLV/PM AOLV/PM EZOLV Sets the communications speed for Modbus communications.	4 (1 - 9)

Note:
Restart the drive after changing the parameter setting.

1 : 1200 bps
2 : 2400 bps
3 : 4800 bps
4 : 9600 bps
5 : 19.2 kbps
6 : 38.4 kbps
7 : 57.6 kbps
8 : 76.8 kbps
9 : 115.2 kbps

■ H5-03: Mbus Parity

No. (Hex.)	Name	Description	Default (Range)
H5-03 (0427)	Mbus Parity	V/f OLV OLV/PM AOLV/PM EZOLV Sets the communications parity used for Modbus communications.	1 (1 - 3)

Note:
Restart the drive after changing the parameter setting.

1 : Even parity
2 : Odd parity
3 : No parity

■ H5-04: Mbus Error Stop

No. (Hex.)	Name	Description	Default (Range)
H5-04 (0428)	Mbus Error Stop	V/f OLV OLV/PM AOLV/PM EZOLV Sets the motor Stopping Method when the drive detects *CE [Modbus Communication Err]* issues.	3 (0 - 3)

0 : Ramp->Stop
The drive ramps the motor to stop in the deceleration time. The output terminal set for *Fault [H2-01 to H2-03 = 3]* activates.

1 : Coast->Stop
The output turns off and the motor coasts to stop. The output terminal set for *Fault [H2-01 to H2-03 = 3]* activates.

2 : Fast Stop (C1-09)
The drive stops the motor in the deceleration time set in *C1-09 [Fast Stop Time]*. The output terminal set for *Fault [H2-01 to H2-03 = 3]* activates.

3 : Alarm Only
The keypad shows *CE* and the drive continues operation. The output terminal set for *Alarm [H2-01 to H2-03 = 4]* activates.

■ H5-05: Mbus Fault Detection Selection

No. (Hex.)	Name	Description	Default (Range)
H5-05 (0429)	Mbus Fault Detection Selection	V/f OLV OLV/PM AOLV/PM EZOLV Sets the function that detects *CE [Modbus Communication Error]* issues during Modbus communications.	1 (0, 1)

If the drive does not receive data from the master during the time set in *H5-09 [Mbus CE Detect Time]*, it will detect a *CE* error.

0 : Disabled

Does not detect *CE*. The drive continues operation.

1 : Enabled

Detects *CE*. If the drive detects *CE*, it will operate as specified by the setting of *H5-04 [Mbus Error Stop]*.

■ H5-06: Mbus Tx Wait Time

No. (Hex.)	Name	Description	Default (Range)
H5-06 (042A)	Mbus Tx Wait Time	V/f OLV OLV/PM AOLV/PM EZOLV Sets the time to wait to send a response message after the drive receives a command message from the master.	5 ms (0 - 65 ms)

Note:

Restart the drive after changing the parameter setting.

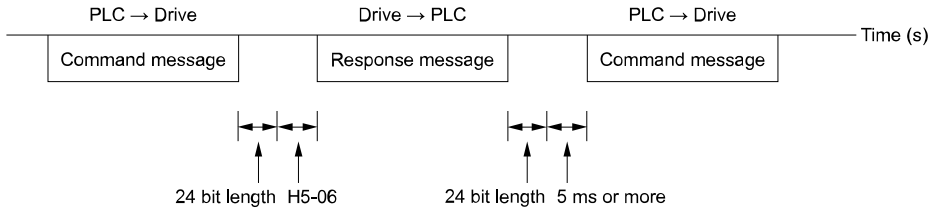

Figure 12.99 Drive Transmit Wait Time

■ H5-09: Mbus CE Detect Time

No. (Hex.)	Name	Description	Default (Range)
H5-09 (0435)	Mbus CE Detect Time	V/f OLV OLV/PM AOLV/PM EZOLV Sets the detection time for *CE [Modbus Communication Error]* issues when communication stops.	2.0 s (0.0 - 25.0 s)

■ H5-10: Mbus 0025H Unit Sel

No. (Hex.)	Name	Description	Default (Range)
H5-10 (0436)	Mbus 0025H Unit Sel	V/f OLV OLV/PM AOLV/PM EZOLV Sets the unit of measure used for the Modbus communications monitor register 0025H (output voltage reference monitor).	0 (0, 1)

0 : 0.1 V units

1 : 1 V units

■ H5-11: Mbus ENTER Command Mode

No. (Hex.)	Name	Description	Default (Range)
H5-11 (043C) RUN	Mbus ENTER Command Mode	V/f OLV OLV/PM AOLV/PM EZOLV Sets the function to make the Enter command necessary to change parameters through Modbus communications.	0 (0, 1)

0 : Enter Required

Make all parameter changes then input the Enter command. You must use the Enter command to enable changes to parameters.

1 : No Enter Required

It is not necessary to input the Enter command to change parameters.

■ H5-12: Mbus Run Command Method Sel

No. (Hex.)	Name	Description	Default (Range)
H5-12 (043D)	Mbus Run Command Method Sel	V/f OLV OLV/PM AOLV/PM EZOLV Sets the input method for the Run command when *b1-02 = 2 [Run Comm. Sel 1 = Modbus]* or *b1-16 = 2 [Run Comm. Sel 2 = Modbus]*.	0 (0, 1)

0 : F/ST R/ST

The drive uses bit 0 in command data 0001H of the Modbus register in the motor forward Run command (bit 0 = 1) and the stop command (bit 0 = 0). The drive uses bit 1 in the motor reverse Run command (bit 1 = 1) and the stop command (bit 1 = 0).

1 : RUN/ST F/R

The drive uses bit 0 in command data 0001H of the Modbus register in the motor Run command (bit 0 = 1) and the stop command (bit 0 = 0). The drive uses bit 1 in the direction of motor rotation command (Forward run (bit1 = 0) or Reverse run (bit 1 = 1)).

■ H5-17: ENTER@CPU Busy Response

No. (Hex.)	Name	Description	Default (Range)
H5-17 (11A1) Expert	ENTER@CPU Busy Response	V/f OLV OLV/PM AOLV/PM EZOLV Sets operation when the EEPROM write command is sent without EEPROM write available. Usually it is not necessary to change this setting.	0 (0, 1)

0 : Ignore (No Write)

1 : Write RAM Only

■ H5-18: Mbus Speed Filter over Comms

No. (Hex.)	Name	Description	Default (Range)
H5-18 (11A2)	Mbus Speed Filter over Comms	V/f OLV OLV/PM AOLV/PM EZOLV Sets the filter time constant used when monitoring motor speed during Modbus communications or with a communication option.	0 ms (0 - 100 ms)

Sets the filter time constant when you monitor the output frequency or motor speed during Modbus communications or use of the communication option.

These are the Modbus registers:

- 003EH (Output Frequency)
- 003FH (Output Frequency)
- 0044H (*U1-05*: Motor Speed)
- 00ACH (*U1-05*: Motor Speed)
- 00ADH (*U1-05*: Motor Speed)

■ H5-20: Mbus Par Reload Mode

No. (Hex.)	Name	Description	Default (Range)
H5-20 (0B57)	Mbus Par Reload Mode	V/f OLV OLV/PM AOLV/PM EZOLV Sets the function to immediately enable updated Modbus communications parameters.	1 (1, 2)

1 : Reload@Power Cycle

2 : Reload Now

Note:

- The setting value automatically returns to *H5-20 = 1* after you enable Modbus communications parameter changes.
- The setting values of these parameters are enabled:
  - *H5-01 [Mbus Address]*
  - *H5-02 [Mbus BaudRate]*
  - *H5-03 [Mbus Parity]*
  - *H5-06 [Mbus Tx Wait Time]*

■ H5-22: Mbus SpdSrch Command

No. (Hex.)	Name	Description	Default (Range)
H5-22 (11CF)	Mbus SpdSrch Command	V/f OLV OLV/PM AOLV/PM EZOLV Enables the Modbus communication register Speed Search function (bit0 of 15DFH).	0 (0, 1)

0 : Disabled

1 : Enabled

If you set *H5-22 = 1* and *H1-xx = 68 [SpdSrch Fref]* at the same time, the drive will detect *oPE03 [Multi-Function Input Setting Err]*.

■ H5-25: Mbus 5A Reg1 Selection

No. (Hex.)	Name	Description	Default (Range)
H5-25 (1589) RUN	Mbus 5A Reg1 Selection	V/f OLV OLV/PM AOLV/PM EZOLV Returns the contents of the specified Modbus communications register when responding to the master device.	0044H (U1-05) (0000H - FFFFH)

■ H5-26: Mbus 5A Reg2 Selection

No. (Hex.)	Name	Description	Default (Range)
H5-26 (158A) RUN	Mbus 5A Reg2 Selection	V/f OLV OLV/PM AOLV/PM EZOLV Returns the contents of the specified Modbus communications register when responding to the master device.	0045H (U1-06) (0000H - FFFFH)

■ H5-27: Mbus 5A Reg3 Selection

No. (Hex.)	Name	Description	Default (Range)
H5-27 (158B) RUN	Mbus 5A Reg3 Selection	V/f OLV OLV/PM AOLV/PM EZOLV Returns the contents of the specified Modbus communications register when responding to the master device.	0042H (U1-03) (0000H - FFFFH)

■ H5-28: Mbus 5A Reg4 Selection

No. (Hex.)	Name	Description	Default (Range)
H5-28 (158C) RUN	Mbus 5A Reg4 Selection	V/f OLV OLV/PM AOLV/PM EZOLV Returns the contents of the specified Modbus communications register when responding to the master device.	0049H (U1-10) (0000H - FFFFH)

◆ H6: PULSE INPUT OUTPUT

H6 parameters set the drive pulse train input and pulse train monitor. These parameters select input and monitor parameters and adjust the pulse train frequency.

A pulse train signal with a maximum single pulse of 32 kHz can be input to the drive input terminal PI. You can use the pulse train signal as the frequency reference, PID feedback value, PID setpoint value, and speed feedback for V/f Control mode.

A pulse train signal with a maximum frequency of 32 kHz can be output from the drive output terminal PO as the monitor value. Sinking mode and sourcing mode are supported.

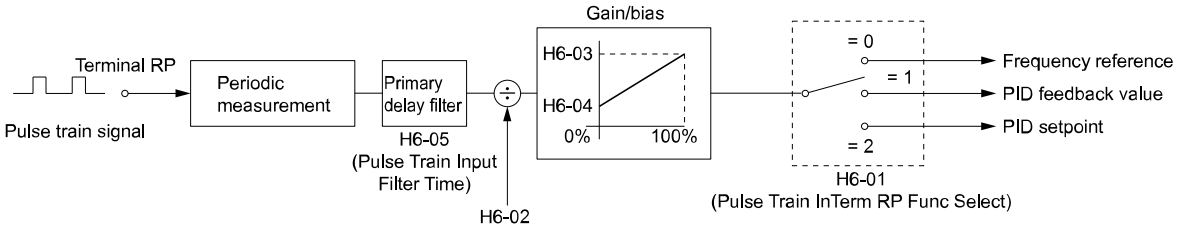

Figure 12.100 Pulse Train Input Block Diagram

■ H6-01: PI Pulse Train Function

No. (Hex.)	Name	Description	Default (Range)
H6-01 (042C)	PI Pulse Train Function	V/f OLV OLV/PM AOLV/PM EZOLV Sets the function for pulse train input terminal PI.	0 (0 - 3)

0 : Freq Ref

The drive inputs the frequency reference received from terminal PI when *b1-01 [Freq. Ref. Sel. 1]* or *b1-15 = 4 [Freq. Ref. Sel. 2 = Pulse Train Input]*.

1 : PIDFbk Value

The drive inputs the PID control feedback value received from terminal PI.

2 : PID SP Value

The drive inputs the PID control target value received from terminal PI.

3 : PG Feedback

Select V/f Control method to enable simple encoder feedback.

Use motor speed feedback for better speed control precision. The drive compares the frequency reference to the motor speed feedback received from the encoder, and uses the ASR function to compensates for motor slip. You cannot use input terminal PI used for the simple encoder to detect the direction of motor rotation. Use a different method to detect motor rotation.

Use these methods to detect the direction of motor rotation.

- Use MFDI
  Set MFDI *H1-xx = 15 [FWD/REV Det]*. When the configured terminal is activated, the motor operates in Reverse run. When the terminal is deactivated, the motor operates in Forward run.
  Use an encoder that outputs 2-tracks (phase A, B) to detect the direction of motor rotation.
- Use the frequency reference
  When the you do not use the MFDI, the Forward/Reverse run command is the same as the direction of motor rotation.

Figure 12.101 shows speed control in Simple Closed Loop V/f Mode.

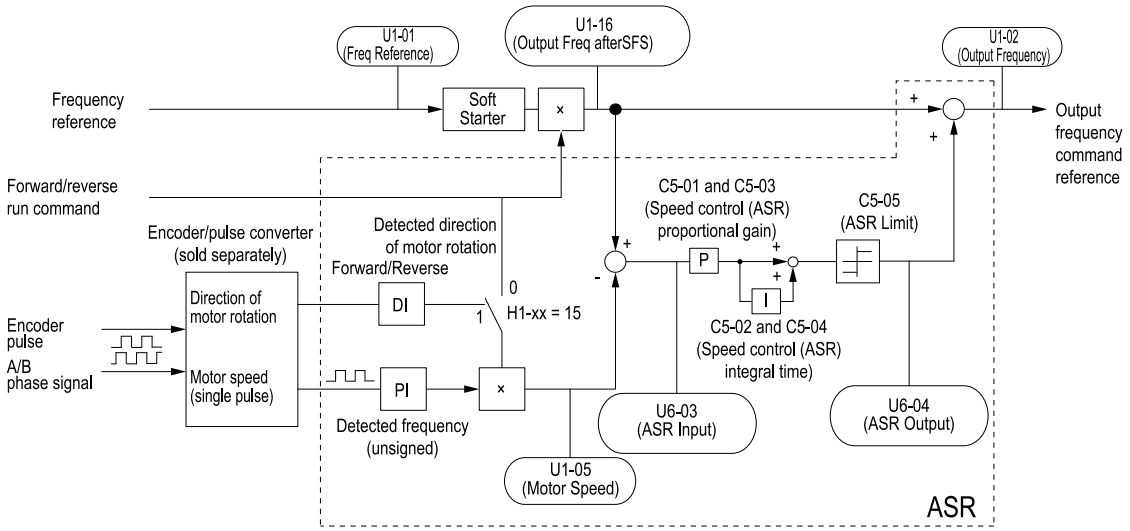

Figure 12.101 Simple Closed Loop Speed Control Block Diagram

Enable Simple Closed Loop V/f Mode

1. Connect the encoder output pulse wiring to terminal PI.
2. Set *A1-02 = 0 [Control Method = V/f Control]*.
3. Set *H6-01 = 3*.
4. Set *H6-02 [PI Frequency Scale]* to the speed feedback (pulse train input signal) frequency at the time when the frequency reference is 100%.
   Make sure that *H6-04 [PI Function Bias* = 0% and *H6-03 [PI Function Gain]* = 100%.
5. Select the detection method for the direction of motor rotation.
   When you use an MFDI, set *H1-xx = 15*.
6. Set *C5 parameters* related to ASR gain and integral time to adjust responsiveness.

Note:
• Set *A1-02 = 0* and *H6-01 = 3* to show *C5 parameters*.
• You cannot use Closed Loop V/f Control mode with the Motor Switch function.

■ H6-02: PI Frequency Scale

No. (Hex.)	Name	Description	Default (Range)
H6-02 (042D) RUN	PI Frequency Scale	V/f OLV OLV/PM AOLV/PM EZOLV Sets the frequency of the pulse train input signal used when the item selected with *H6-01 [PI Pulse Train Function]* is input at 100%.	1440 Hz (100 - 32000 Hz)

■ H6-03: PI Function Gain

No. (Hex.)	Name	Description	Default (Range)
H6-03 (042E) RUN	PI Function Gain	V/f OLV OLV/PM AOLV/PM EZOLV Sets the gain used when the function in *H6-01 [PI Pulse Train Function]* is input to terminal PI.	100.0% (0.0 - 1000.0%)

■ H6-04: PI Function Bias

No. (Hex.)	Name	Description	Default (Range)
H6-04 (042F) RUN	PI Function Bias	V/f OLV OLV/PM AOLV/PM EZOLV Sets the bias used when the function in *H6-01 [PI Pulse Train Function]* is input to terminal PI. Sets a value at the time when the pulse train is 0 Hz.	0.0% (-100.0 - 100.0%)

■ H6-05: PI Filter Time

No. (Hex.)	Name	Description	Default (Range)
H6-05 (0430) RUN	PI Filter Time	V/f OLV OLV/PM AOLV/PM EZOLV Sets the time constant for the pulse train input primary delay filters.	0.10 s (0.00 - 2.00 s)

■ H6-06: PO Mon.Selection

No. (Hex.)	Name	Description	Default (Range)
H6-06 (0431) RUN	PO Mon.Selection	V/f OLV OLV/PM AOLV/PM EZOLV Sets a function for pulse train monitor output terminal PO. Sets the "x-xx" part of the *Ux-xx* monitor.	102 (000, 031, 101, 102, 105, 116, 501, 502, 801 - 809, 821 - 825, 831 - 839, 851 - 855)

Note:
To use in through mode or when terminal PO is not used, set this parameter to 000 or 031.

When you use the pulse train monitor, make sure that you connect peripheral devices as specified by these load conditions:

Incorrect connections can make the characteristics not sufficient or cause mechanical damage.

• Use the pulse train monitor as the sourcing output.

Output Voltage VRL(V)	Load Impedance (kΩ)
5 V or more	1.5 kΩ or more
8 V or more	4.0 kΩ or more
10 V or more	10 kΩ or more

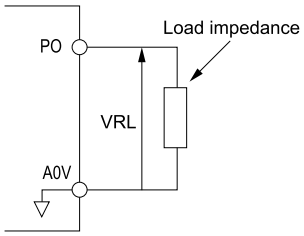

Figure 12.102 Circuit Diagram When Used as the Sourcing Output

- Use the pulse train monitor as the sinking input

External Power Supply (V)	12 VDC ± 10%, 15 VDC ± 10%
Sinking current (mA)	16 mA or less

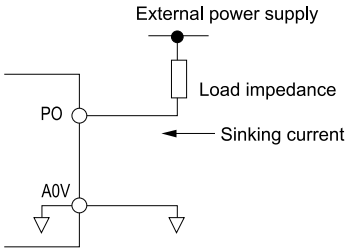

Figure 12.103 Circuit Diagram When Used as the Sinking Input

■ H6-07: PO Freq.Scaling

No. (Hex.)	Name	Description	Default (Range)
H6-07 (0432) RUN	PO Freq.Scaling	V/f OLV OLV/PM AOLV/PM EZOLV Sets the frequency of the pulse train output signal used when the monitor set with *H6-06 [PO Mon.Selection]* is 100%.	1440 Hz (0 - 32000 Hz)

When *H6-06 = 102 [PO Mon.Selection = Output Frequency]* and *H6-07 = 0*, the pulse train output terminal PO outputs the same frequency as the drive output frequency.

■ H6-08: PI Minimum Frequency

No. (Hex.)	Name	Description	Default (Range)
H6-08 (043F)	PI Minimum Frequency	V/f OLV OLV/PM AOLV/PM EZOLV Sets the minimum frequency of the pulse train signal that terminal PI can detect.	0.5 Hz (0.1 - 1000.0 Hz)

- When you input a pulse train frequency that is less than the value of *H6-08*, the pulse train input is 0.0 Hz.
- Set *H6-01 [PI Pulse Train Function] = 0 [Freq Ref]*, *1 [PIDFbk Value]*, or *2 [PID SP Value]* to enable this parameter.
- When *H6-01 = 3 [PG Feedback]*, the drive applies the setting of *F1-14 [Enc PGOpen Time for Detection]* to the minimum frequency.

■ H6-09 PO Volt.PhaseSync Selection

No. (Hex.)	Name	Description	Default (Range)
H6-09 (156E)	PO Volt.PhaseSync Selection	V/f OLV OLV/PM AOLV/PM EZOLV Set whether to output the pulse synchronized with drive output voltage phase from the pulse train monitor output terminal PO. This parameter is only enabled when *H6-06 = 102 [PO Mon. Selection = Output Frequency]* and *H6-07 = 0 [PO Freq.Scaling = 0 Hz]*.	0 (0, 1)

0 : Disabled

1 : Enabled

◆ H7: VIRTUAL INPUT OUTPUT

The virtual I/O function performs the following.

- Inputs the result of the output from the MFDO terminal to the MFDI terminal without external wiring.

• Inputs the result of the output from the MFAO terminal to the MFAI terminal without external wiring.

WARNING! *Sudden Movement Hazard. Before you do a test run, make sure that the setting values for virtual input and output function parameters are correct. Virtual input and output functions can have different default settings and operation than wired input and output functions. Incorrect function settings can cause serious injury or death.*

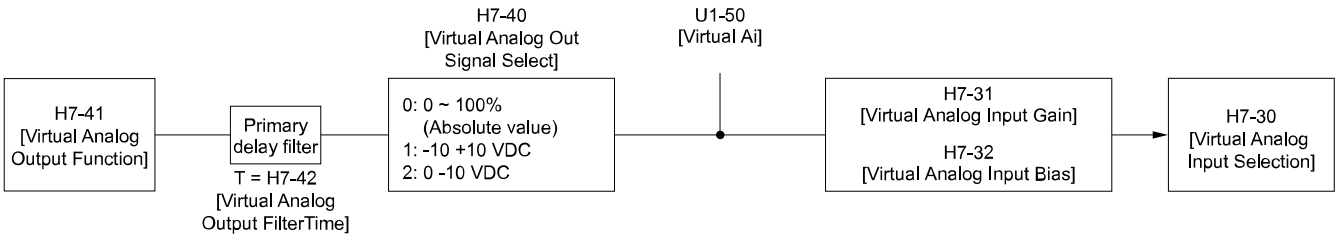

Figure 12.104 Virtual Analog I/O Functional Block Diagram

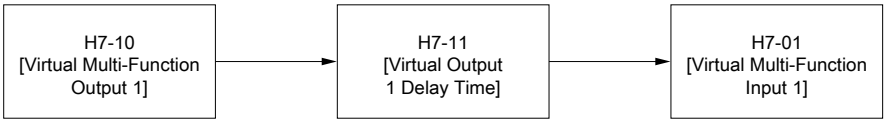

Figure 12.105 Virtual Digital I/O Functional Block Diagram

Note:

- Refer to *H1: DIGITAL INPUTS on page 566* for more information on the virtual digital input setting values.
- Refer to *H2: DIGITAL OUTPUTS on page 587* for more information on the virtual digital output setting values.
- Refer to *H3: ANALOG INPUTS on page 609* for more information on the virtual analog input setting values.
- Refer to *H4: ANALOG OUTPUTS on page 619* for more information on the virtual analog output setting values.
- You cannot set *5 [3-Wire Seq.]* and *20 to 2F [External Fault]* to *H7-01 to H7-04 [Virtual In1 Select Function to Virtual In4 Select Function]*.
- If the terminal is not used, set *H7-01 to H7-04 = 0*. However, the through mode function is not supported.

■ H7-00: Virtual MFIO Selection

No. (Hex.)	Name	Description	Default (Range)
H7-00 (116F) Expert	Virtual MFIO Selection	V/f OLV OLV/PM AOLV/PM EZOLV Sets the function to enable and disable the virtual I/O function. Set this parameter to 1 to operate the virtual I/O function.	0 (0, 1)

0 : Disabled

1 : Enabled

■ H7-01: Virtual In1 Select Function

No. (Hex.)	Name	Description	Default (Range)
H7-01 (1185) Expert	Virtual In1 Select Function	V/f OLV OLV/PM AOLV/PM EZOLV Sets the function that enters the virtual input set in *H7-10 [Virtual Out1 Select Function]*.	0 (0 - 4, 6 - 19F)

■ H7-02: Virtual In2 Select Function

No. (Hex.)	Name	Description	Default (Range)
H7-02 (1186) Expert	Virtual In2 Select Function	V/f OLV OLV/PM AOLV/PM EZOLV Sets the function that enters the virtual input set in *H7-12 [Virtual Out2 Select Function]*.	0 (0 - 4, 6 - 19F)

■ H7-03: Virtual In3 Select Function

No. (Hex.)	Name	Description	Default (Range)
H7-03 (1187) Expert	Virtual In3 Select Function	V/f OLV OLV/PM AOLV/PM EZOLV Sets the function that enters the virtual input set in *H7-14 [Virtual Out3 Select Function]*.	0 (0 - 4, 6 - 19F)

■ H7-04: Virtual In4 Select Function

No. (Hex.)	Name	Description	Default (Range)
H7-04 (1188) Expert	Virtual In4 Select Function	V/f OLV OLV/PM AOLV/PM EZOLV Sets the function that enters the virtual input set in *H7-16 [Virtual Out4 Select Function]*.	0 (0 - 4, 6 - 19F)

■ H7-10: Virtual Out1 Select Function

No. (Hex.)	Name	Description	Default (Range)
H7-10 (11A4) Expert	Virtual Out1 Select Function	V/f OLV OLV/PM AOLV/PM EZOLV Sets the function for virtual digital output 1.	0 (0 - 1A7)

■ H7-11: Virtual Out1 Delay Time

No. (Hex.)	Name	Description	Default (Range)
H7-11 (11A5) Expert	Virtual Out1 Delay Time	V/f OLV OLV/PM AOLV/PM EZOLV Sets the minimum ON time for virtual digital output 1.	0.1 s (0.0 - 25.0 s)

■ H7-12: Virtual Out2 Select Function

No. (Hex.)	Name	Description	Default (Range)
H7-12 (11A6) Expert	Virtual Out2 Select Function	V/f OLV OLV/PM AOLV/PM EZOLV Sets the function for virtual digital output 2.	0 (0 - 1A7)

■ H7-13: Virtual Out2 Delay Time

No. (Hex.)	Name	Description	Default (Range)
H7-13 (11A7) Expert	Virtual Out2 Delay Time	V/f OLV OLV/PM AOLV/PM EZOLV Sets the minimum ON time for virtual digital output 2.	0.1 s (0.0 - 25.0 s)

■ H7-14: Virtual Out3 Select Function

No. (Hex.)	Name	Description	Default (Range)
H7-14 (11A8) Expert	Virtual Out3 Select Function	V/f OLV OLV/PM AOLV/PM EZOLV Sets the function for virtual digital output 3.	0 (0 - 1A7)

■ H7-15: Virtual Out3 Delay Time

No. (Hex.)	Name	Description	Default (Range)
H7-15 (11A9) Expert	Virtual Out3 Delay Time	V/f OLV OLV/PM AOLV/PM EZOLV Sets the minimum ON time for virtual digital output 3.	0.1 s (0.0 - 25.0 s)

■ H7-16: Virtual Out4 Select Function

No. (Hex.)	Name	Description	Default (Range)
H7-16 (11AA) Expert	Virtual Out4 Select Function	V/f OLV OLV/PM AOLV/PM EZOLV Sets the function for virtual digital output 4.	0 (0 - 1A7)

■ H7-17: Virtual Out4 Delay Time

No. (Hex.)	Name	Description	Default (Range)
H7-17 (11AB) Expert	Virtual Out4 Delay Time	V/f OLV OLV/PM AOLV/PM EZOLV Sets the minimum ON time for virtual digital output 4.	0.1 s (0.0 - 25.0 s)

■ H7-30: Virtual AIn Select Function

No. (Hex.)	Name	Description	Default (Range)
H7-30 (1177) Expert	Virtual AIn Select Function	V/f OLV OLV/PM AOLV/PM EZOLV Sets the virtual analog input function.	0 (0 - 32)

■ H7-31: Virtual AIn Gain

No. (Hex.)	Name	Description	Default (Range)
H7-31 (1178) RUN Expert	Virtual AIn Gain	V/f OLV OLV/PM AOLV/PM EZOLV Sets the virtual analog input gain.	100.0% (-999.9 - 999.9%)

■ H7-32: Virtual AIn Bias

No. (Hex.)	Name	Description	Default (Range)
H7-32 (1179) RUN Expert	Virtual AIn Bias	V/f OLV OLV/PM AOLV/PM EZOLV Sets the virtual analog input bias.	0.0% (-999.9 - 999.9%)

■ H7-40: Virtual AOut Enable

No. (Hex.)	Name	Description	Default (Range)
H7-40 (1163)	Virtual AOut Enable	V/f OLV OLV/PM AOLV/PM EZOLV Sets the signal level of the virtual analog output.	1 (1 - 3)

1 : 0 to 100% (Absolute Value)

2 : -100 to 100%

3 : 0 to 100% (Lower Limit at 0)

■ H7-41: Virtual AOut Select Function

No. (Hex.)	Name	Description	Default (Range)
H7-41 (1164)	Virtual AOut Select Function	V/f OLV OLV/PM AOLV/PM EZOLV Sets the monitor to be output from the virtual analog output.	102 (0 - 999)

Set the *x-xx* part of the *Ux-xx [Monitor]*. For example, set *H7-41 = 102* to monitor *U1-02 [Output Frequency]*.

■ H7-42: Virtual AOut Filter Time

No. (Hex.)	Name	Description	Default (Range)
H7-42 (1165)	Virtual AOut Filter Time	V/f OLV OLV/PM AOLV/PM EZOLV Sets the time constant for a primary filter of the virtual analog output.	0.00 s (0.00 - 2.00 s)

12.8 L: PROTECTION

L parameters set the following functions.

- Motor Overload Protection
- Operation During Momentary Power Loss
- Stall Prevention
- Speed Detection
- Auto Restart
- Detection of Overtorque/Undertorque
- Torque Limit
- Hardware Protection

◆ L1: MOTOR PROTECTION

L1 parameters set the motor overload protection function.

■ Motor Protection Using Positive Temperature Coefficient (PTC) Thermistors

The temperature resistance characteristics of three PTC thermistors in the motor stator winding protect the motor from overheat.

A PLC thermistor must have the characteristics shown below for each motor phase.

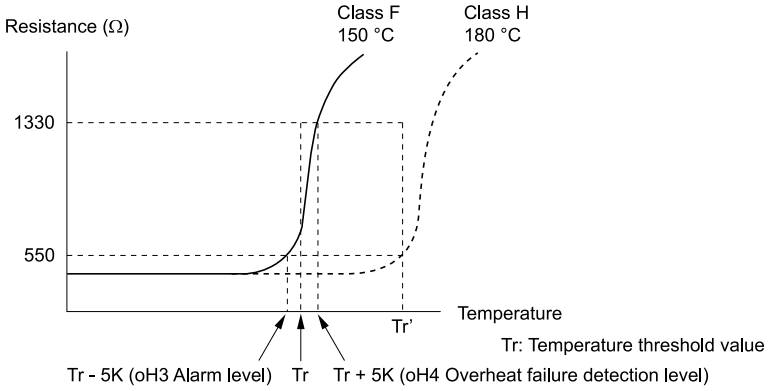

Figure 12.106 PTC Thermistor Temperature and Resistance

If the PTC input signal input to the drive is more than the overload alarm level, the drive detects *oH3 [Motor Overheat (PTC Input)]*. The drive continues the operation set in *L1-03 [Motor oH AL Reaction Select]*. By default, the keypad shows oH3 and the drive continues operation.

The overheat fault level triggers an *oH4 [Motor Overheat Fault (PTC Input)]* fault, and outputs a fault signal. The drive outputs a fault signal and uses the stop method set in *L1-04 [Motor oH FLT Reaction Select]* to stop the motor.

Note:

PTC is an acronym for Positive Temperature Coefficient.

■ L1-01: Motor Cool Type for OL1 Calc

No. (Hex.)	Name	Description	Default (Range)
L1-01 (0480)	Motor Cool Type for OL1 Calc	V/f OLV OLV/PM AOLV/PM EZOLV Sets the motor overload protection with electronic thermal protectors.	Determined by A1-02 (0 - 6)

This parameter enables and disables the motor overload protection with electronic thermal protectors.

The cooling capability of the motor changes when the speed control range of the motor changes. Use an electronic thermal protector that aligns with the permitted load characteristics of the motor to select motor protection.

The electronic thermal protector of the drive uses these items to calculate motor overload tolerance and supply overload protection for the motor:

- Output Current
- Output Frequency

- Motor thermal characteristics
- Time characteristics

If the drive detects motor overload, the drive will trigger an *oL1 [Motor Overload]* and stop the drive output.

Set *H2-01 = 4E [NO,NC,CM FuncSelection = Drive PreOH]* to set a motor overload alarm. If the motor overload level is more than 90% of the *oL1* detection level, the output terminal activates and triggers an overload alarm.

0 : Disabled

Disable motor protection when motor overload protection is not necessary or when the drive is operating more than one motor.

Refer to Figure 12.107 for an example of the circuit configuration to connect more than one motor to one drive.

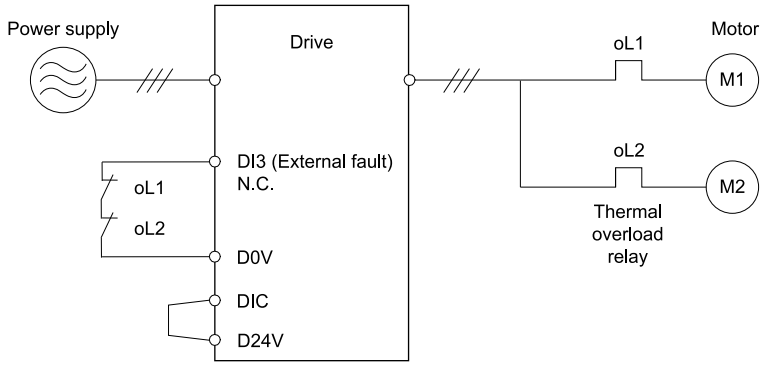

Figure 12.107 Protection Circuit Configuration to Connect More than One Motor to One Drive

NOTICE: *When you connect more than one motor to one drive or when the motor amp rating is higher than the drive amp rating, set L1-01 = 0 [Motor Cool Type for OL1 Calc = Disabled] and install thermal overload relays for each motor. The electronic thermal protection of the drive will not function and it can cause damage to the motor.*

1 : VTorque

Use this setting for general-purpose motors with a 60 Hz base frequency.

The overload tolerance decreases as motor speed decreases because the cooling fan speed decreases and the ability of the motor to cool decreases in the low speed range.

The overload tolerance characteristics of the motor change the trigger point for the electronic thermal protector. This provides motor overheat protection from low speed to high speed across the full speed range.

Load Tolerance	Cooling Capability	Overload Characteristics (at 100% motor load)
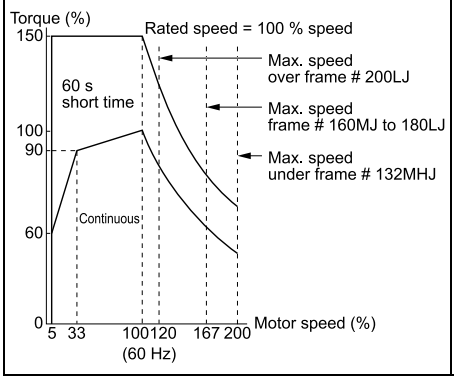	This motor is designed to operate with commercial line power. Operate at a 60 Hz base frequency to maximize the motor cooling ability.	If the motor operates at frequencies less than 60 Hz, the drive will detect *oL1*. The drive triggers a fault relay output and the motor coasts to stop.

2 : CT 10:1 Speed Range

Use this setting for drive-dedicated motors with a speed range for constant torque of 1:10.

The speed control for this motor is 10% to 100% when at 100% load. Operating slower than 10% speed at 100% load will cause motor overload.

Load Tolerance	Cooling Capability	Overload Characteristics (at 100% motor load)
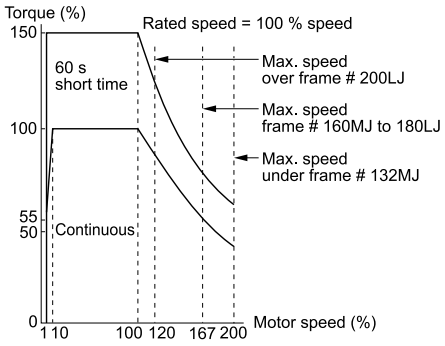	This motor is designed to withstand increased temperatures during continuous operation in the low speed range (10% base frequency).	The motor operates continuously at 10% to 100% base frequency. Operating slower than 10% speed at 100% load will cause motor overload.

3 : CT 100:1 SpeedRange

Use this setting for vector motors with a speed range for constant torque of 1:100.

The speed control for this motor is 1% to 100% when at 100% load. Operating slower than 1% speed at 100% load will cause motor overload.

Load Tolerance	Cooling Capability	Overload Characteristics (at 100% motor load)
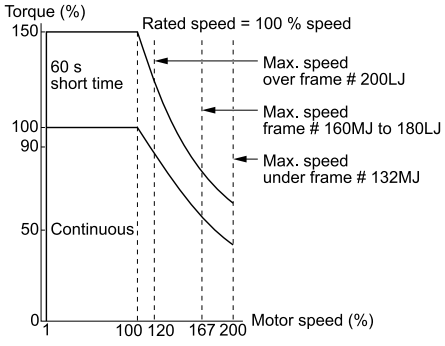	This motor is designed to withstand increased temperatures during continuous operation in the low speed range (1% base frequency).	The motor operates continuously at 1% to 100% base frequency. Operating slower than 1% speed at 100% load will cause motor overload.

4 : PM VTorque

Use this setting for PM motors with derated torque characteristics.

The overload tolerance decreases as motor speed decreases because the cooling fan speed decreases and the ability of the motor to cool decreases in the low speed range.

The overload tolerance characteristics of the motor change the trigger point for the electronic thermal protector. This provides motor overheat protection from low speed to high speed across the full speed range.

Load Tolerance	Cooling Capability	Overload Characteristics (at 100% motor load)
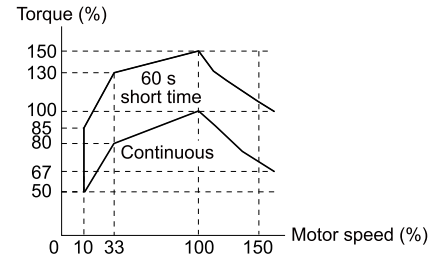	This motor is designed to withstand increased temperatures during continuous operation at rated speed and rated torque.	If the motor operates continuously at lower speed than rated rotation speed at more than 100% torque, the drive will detect *oL1*. The drive triggers a fault relay output and the motor coasts to stop.

5 : PM CTorque

Use this setting with a PM motor for constant torque that has a speed range for constant torque of 1:500.

The speed control for this motor is 0.2% to 100% when at 100% load. Operating slower than 0.2% speed at 100% load will cause motor overload.

Load Tolerance	Cooling Capability	Overload Characteristics (at 100% motor load)
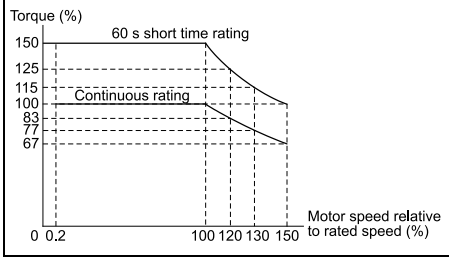	This motor is designed to withstand increased temperatures during continuous operation in the low speed range (0.2% base frequency).	The motor operates continuously at 0.2% to 100% rated speed. Operating slower than 0.2% speed at 100% load will cause motor overload.

6 : VT (50Hz)

Use this setting for general-purpose motors with a 50 Hz base frequency.

The overload tolerance decreases as motor speed decreases because the cooling fan speed decreases and the ability of the motor to cool decreases in the low speed range.

The overload tolerance characteristics of the motor change the trigger point for the electronic thermal protector. This provides motor overheat protection from low speed to high speed across the full speed range.

Load Tolerance	Cooling Capability	Overload Characteristics (at 100% motor load)
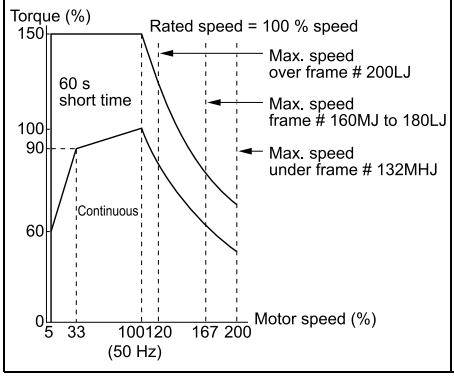	This motor is designed to operate with commercial line power. Operate at a 50 Hz base frequency to maximize the motor cooling ability.	If the motor operates at frequencies less than commercial line power, the drive will detect *oL1*. The drive triggers a fault relay output and the motor coasts to stop.

■ L1-02: OL1 Protect Time

No. (Hex.)	Name	Description	Default (Range)
L1-02 (0481)	OL1 Protect Time	V/f OLV OLV/PM AOLV/PM EZOLV Sets the operation time for the electronic thermal protector of the drive to prevent damage to the motor. Usually it is not necessary to change this setting.	1.0 min (0.1 - 5.0 min)

Set the overload tolerance time to the length of time that the motor can operate at 150% load from continuous operation at 100% load.

When the motor operates at 150% load continuously for 1 minute after continuous operation at 100% load (hot start), the default setting triggers the electronic thermal protector.

Figure 12.108 shows an example of the electronic thermal protector operation time. Motor overload protection operates in the range between a cold start and a hot start.

This example shows a general-purpose motor operating at the base frequency with *L1-02* set to 1.0 min.

- Cold start
  Shows the motor protection operation time characteristics when the overload occurs immediately after starting operation from a complete stop.
- Hot start
  Shows the motor protection operation time characteristics when overload occurs from continuous operation below the motor rated current.

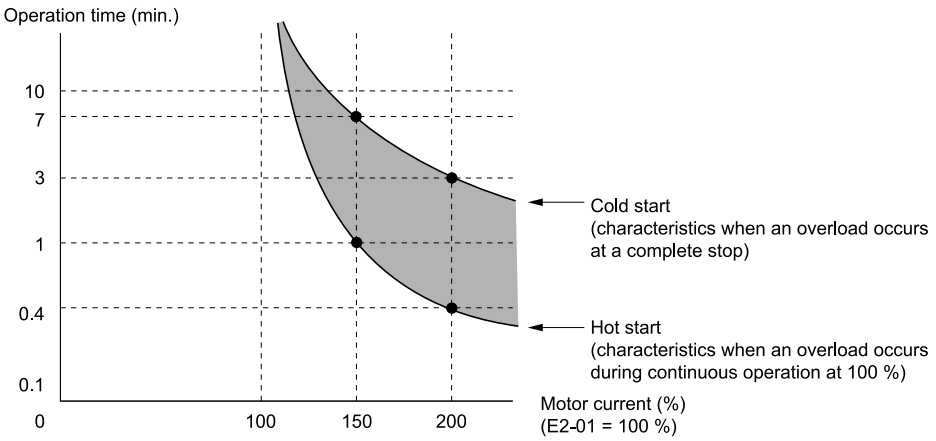

Figure 12.108 Protection Operation Time for a General-purpose Motor at Rated Output Frequency

■ L1-03: Motor oH AL Reaction Select

No. (Hex.)	Name	Description	Default (Range)
L1-03 (0482)	Motor oH AL Reaction Select	V/f OLV OLV/PM AOLV/PM EZOLV Sets drive operation when the PTC input signal entered into the drive is at the *oH3 [Motor Overheat Alarm]* detection level.	3 (0 - 3)

0 : Ramp->Stop

The drive ramps the motor to stop in the deceleration time. The output terminal set for *Fault [H2-01 to H2-03 = 3]* activates.

1 : Coast->Stop

The output turns off and the motor coasts to stop. The output terminal set for *Fault [H2-01 to H2-03 = 3]* activates.

2 : Fast Stop (C1-09)

The drive stops the motor in the deceleration time set in *C1-09 [Fast Stop Time]*. The output terminal set for *Fault [H2-01 to H2-03 = 3]* activates.

3 : Alarm Only

The keypad shows *oH3* and the drive continues operation. The output terminal set for *Alarm [H2-01 to H2-03 = 4]* activates.

■ L1-04: Motor oH FLT Reaction Select

No. (Hex.)	Name	Description	Default (Range)
L1-04 (0483)	Motor oH FLT Reaction Select	V/f OLV OLV/PM AOLV/PM EZOLV Sets the drive operation when the PTC input signal to the drive is at the *oH4 [Motor Overheat Fault (PTC Input)]* detection level.	1 (0 - 2)

0 : Ramp->Stop

The drive ramps the motor to stop in the deceleration time. The output terminal set for *Fault [H2-01 to H2-03 = 3]* activates.

1 : Coast->Stop

The output turns off and the motor coasts to stop. The output terminal set for *Fault [H2-01 to H2-03 = 3]* activates.

2 : Fast Stop (C1-09)

The drive stops the motor in the deceleration time set in *C1-09 [Fast Stop Time*. The output terminal set for *Alarm [H2-01 to H2-03 = 4]* activates.

■ L1-05: Motor Therm.Filter Time

No. (Hex.)	Name	Description	Default (Range)
L1-05 (0484)	Motor Therm.Filter Time	V/f OLV OLV/PM AOLV/PM EZOLV Sets the primary delay time constant for the PTC input signal entered to the drive. This parameter prevents accidental motor overheat faults.	0.20 s (0.00 - 10.00 s)

■ L1-08: oL1 Current Level

No. (Hex.)	Name	Description	Default (Range)
L1-08 (1103)	oL1 Current Level	V/f OLV OLV/PM AOLV/PM EZOLV Sets the reference current for the motor 1 thermal overload detection. When the current level > 0.0 A, you cannot set this value < 10% of drive rated current.	0.0 A (0.0 A or 10% to 150% of the drive rated current)

When *L1-08 = 0.0 A*, the drive uses *E2-01 [Mot Rated Current (FLA)]* to detect the motor overload protection. In PM control mode, the drive uses *E5-03 [PM Mot Rated Current (FLA)]* to detect the motor overload protection.

When *L1-08 ≠ 0.0 A*, the set value is the reference for motor overload protection.

Note:
- Display is in these units:
  – 0.01 A: 2001 to 2042, B001 to B018, 4001 to 4023
  – 0.1 A: 2056 to 2082, 4031 to 4060
- When the current level > 0.0 A, you cannot set this value < 10% of drive rated current.

■ L1-09: M2 oL1 Curr.Level

No. (Hex.)	Name	Description	Default (Range)
L1-09 (1104)	M2 oL1 Curr.Level	V/f OLV OLV/PM AOLV/PM EZOLV Sets the reference current for the motor 2 thermal overload detection. When the current level > 0.0 A, you cannot set this value < 10% of drive rated current.	0.0 A (0.0 A or 10 to150% of the drive rated current)

When *L1-09 = 0.0 A*, the drive uses *E4-01 [M2 Rated Current (FLA)]* to detect the motor overload protection.

When *L1-09 ≠ 0.0 A*, the set value is the reference for motor overload protection.

Note:
- Display is in these units:
  – 0.01 A: 2001 to 2042, B001 to B018, 4001 to 4023
  – 0.1 A: 2056 to 2082, 4031 to 4060
- When the current level > 0.0 A, you cannot set this value < 10% of drive rated current.

■ L1-13: Motor oL1 Memory Selection

No. (Hex.)	Name	Description	Default (Range)
L1-13 (046D)	Motor oL1 Memory Selection	V/f OLV OLV/PM AOLV/PM EZOLV Sets the function that keeps the current electronic thermal protector value when the drive stops receiving power.	1 (0, 1)

0 : Disabled
1 : Enabled

Sets if the drive will calculate the motor again when the drive is energized again.

■ L1-22: LeakCurrFil Tim1

No. (Hex.)	Name	Description	Default (Range)
L1-22 (0768) RUN	LeakCurrFil Tim1	V/f OLV OLV/PM AOLV/PM EZOLV Sets the leakage current detection reduction filter time constant during constant speed run.	Determined by C6-02 (0.0 - 60.0 s)

Note:
You can set this parameter when *C6-02 = B [Carrier Frequency Selection = Leakage Current Rejection PWM]*.

If incorrect detection of alarms, for example *oL1 [Motor Overload]*, occur or errors occur in the values on the current monitor because of a leakage current, increase the setting value.

■ L1-23: LeakCurrFil Tim2

No. (Hex.)	Name	Description	Default (Range)
L1-23 (0769) RUN	LeakCurrFil Tim2	V/f OLV OLV/PM AOLV/PM EZOLV Sets the leakage current detection reduction filter time constant during acceleration/deceleration.	Determined by C6-02 (0.0 - 60.0 s)

Note:
- You can set this parameter when *C6-02 = B [Carrier Frequency Selection = Leakage Current Rejection PWM]*.
- When the setting value increases, the current monitor also starts up slowly. Examine the relevant sequence for problems.

If errors occur in the values on the current monitor during acceleration/deceleration, increase the setting value.

◆ L2: POWER LOSS RIDE THROUGH

L2 parameters set the drive operation during momentary power loss and the KEB Ride-Thru function method of operation.

■ KEB Ride-Thru Function

KEB is an acronym for Kinetic Energy Backup. If the drive detects a power loss or momentary power loss, it will quickly decelerate the motor. The drive uses regenerative energy from the motor to keep the main circuit operating. When you return power during motor deceleration, the drive returns operation to the status before the power loss. The KEB Ride-Thru function is different than other functions for continuous operation. If the drive detects momentary power loss, the motor will ramp to stop. It will not coast to stop. This function is applicable for applications in which it is necessary to prevent materials from running out, for example control for film and fiber lines.

The KEB Ride-Thru function has 4 methods of operation. Parameter *L2-29 [KEB Method]* sets the method.

When you use the KEB Ride-Thru function with one drive, set *L2-29 = 1, 2 [Single KEB1 Ride-Thru, Single KEB2 Ride-Thru]*.

If deceleration in coordination with more than one drive is necessary, for example textile machinery line systems, set *L2-29 = 3, 4 [System KEB1 Ride-Thru, System KEB2 Ride-Thru]*.

Table 12.49 KEB Ride-Thru Function Operation Method

L2-29	Kinetic Energy Backup Method	Operation	Configuration Precautions
0	Single Drive KEB Ride-Thru 1	The drive uses regenerative energy from the motor to keep the DC bus voltage at the level set in *L2-11 [KEB DC Volt Setpoint]* while it adjusts the rate of deceleration. The KEB operation continues while the drive adjusts the deceleration rate with the setting of *C1-09 [Fast Stop Time]*.	• Set C1-09 correctly to prevent *Uv1 [DC Bus Undervoltage]* and *ov [Overvoltage]*. • If the drive detects *Uv1* during the KEB operation, decrease the value set in *C1-09*. • If the drive detects *ov* during the KEB operation, increase the value set in *C1-09*.
1	Single Drive KEB Ride-Thru 2	The drive uses information about the inertia of the connected machinery to find the deceleration rate necessary to keep the DC bus voltage at the level set in parameter *L2-11*. The drive uses system inertia to calculate the deceleration time. You cannot adjust this value.	• If the drive detects *Uv1* during the KEB operation, increase the setting value of *L3-20 [DCBus VoltAdj Gain]* and *L3-21 [OVSup Acc/Dec Gain]*. • If the drive detects *ov* during the KEB operation, decrease the setting values of *L3-20* and *L3-21*.
2	System KEB Ride-Thru 1	The drive does not monitor the DC bus voltage. The drive decelerates at the KEB deceleration time set in *L2-06*. Use *L2-06* to set the time necessary to decelerate from the current frequency reference to 0 Hz. More than one drive can decelerate and keep a constant speed ratio between drives.	Use the dynamic braking option with System KEB Ride-Thru 1.
3	System KEB Ride-Thru 2	The drive uses the KEB deceleration time set in *L2-06* to decelerate and it also monitors the DC bus voltage. If the voltage level increases, the drive momentarily holds the frequency to prevent an *ov* before it continues to decelerate.	If you cannot use the dynamic braking option, use System KEB Ride-Thru 2.

■ KEB Ride Thru Start

When *L2-01 = 1 [RideThru@PwrLoss = Enabled]* and *L2-50 = 2, 3, 4 [KEB Mode, KEB Stop Mode, KEB Decel to Stop]*, the drive starts the KEB operation immediately after it detects a momentary power loss. When one of these conditions occur, the drive will activate KEB Ride-Thru:

- KEB Ride-Thru 1 set for the MFDI terminal becomes enabled (terminal is deactivated when *H1-xx = 40* or terminal is activated when *H1-xx = 41*).
  The drive uses the mode selected *L2-29 [KEB Method]* to start KEB operation.
- KEB Ride-Thru 2 set for the MFDI terminal becomes enabled (terminal is deactivated when *H1-xx = 42* or terminal is activated when *H1-xx = 43*).
  The drive automatically starts Single KEB Ride-Thru 2 and it ignores the setting of L2-29.
- The DC bus voltage is less than the level set in *L2-05 [UV Detection Lvl (Uv1)]*.
  The KEB operation will start as specified in *L2-29*.

Note:

If you try to set KEB Ride-Thru 1 and 2 to the MFDI terminals at the same time, it will trigger *oPE03 [Multi-Function Input Setting Err]*.

n this example, the drive detects that the DC bus voltage is less than the level set in *L2-05* and starts the KEB operation. When you return power during KEB operation, the drive will continue KEB operation when the KEB Ride-Thru is input, although the time set in *L2-10 [Minimum KEB Time]* expired. The motor accelerates again after you cancel the KEB Ride-Thru.

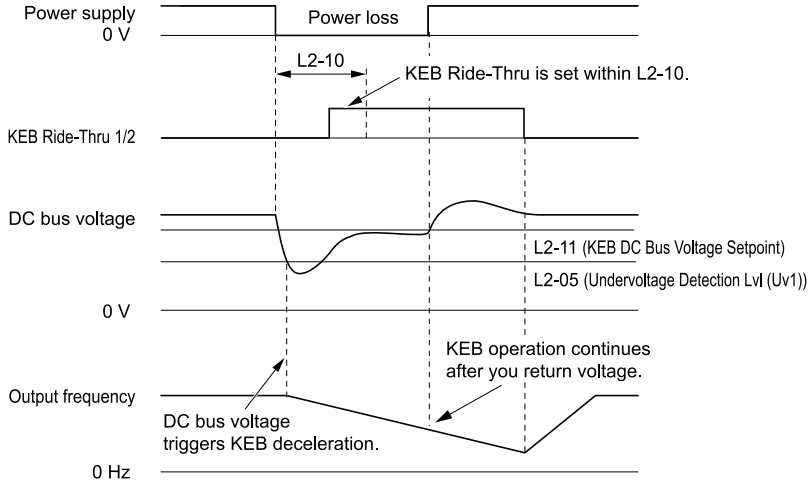

Figure 12.109 KEB Operation through KEB Ride-Thru Input

■ KEB Ride-Thru End Detection

Parameter *L2-01 [RideThru@PwrLoss]* and a digital input programmed for KEB set the KEB function end detection.

Use the Momentary Power Loss Ride-Thru Time to Cancel KEB Operation

The following figure shows an example with this configuration:

- *L2-01 = 1 [Enabled] and L2-50 = 2 [RidThruMode@PwrLoss = KEB Mode]* is set.
- KEB Ride-Thru is not used.

The drive starts deceleration through KEB operation. When the time set in *L2-10 [Minimum KEB Time]* expires, the drive stops the KEB operation and then it accelerates the motor again until it is at the frequency reference value used before the power loss.

If you do not return the DC bus voltage in the time set in *L2-02 [RideThrough Time@Power Loss]*, the drive detects *Uv1 [DC Bus Undervoltage]* and the drive turns off its output.

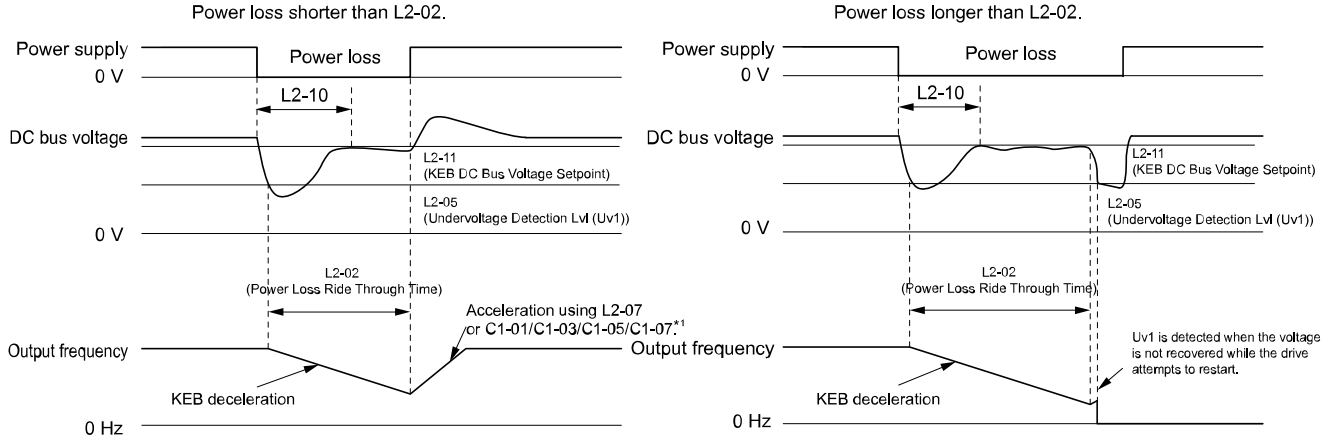

Figure 12.110 Cancel the KEB Operation after the Momentary Power Loss Ride-Thru Time Is Expired without KEB Ride-Thru

*1 When *L2-07 = 0.00 [KEB Accel Time = 0.00 s]*, the drive accelerates again as specified by the applicable *Acceleration Time [C1-01, C1-03, C1-05, C1-07]*, and usual operation continues.

Use the Momentary Power Loss Ride-Thru Time and KEB Ride-Thru to Cancel KEB Operation

The following figure shows an example with this configuration:

- *L2-01 = 1 [Enabled] and L2-50 = 2 [KEB Mode]*.
- Use *KEB Ride-Thru 1 [H1-xx = 40, 41]* or *KEB Ride-Thru 2 [H1-xx = 42, 43]*.

The drive starts deceleration through KEB operation. The drive decelerates for the time set in parameter *L2-10*, then it measures the DC bus voltage and the status of the digital input terminal set for KEB Ride-Thru. When the DC bus voltage is less than the level set in *L2-11 [KEB DC Volt Setpoint]*, or if the KEB digital input is active, KEB deceleration continues. When the DC bus voltage is more than the level set in *L2-11*, the drive ends KEB operation. The drive accelerates the motor to the frequency reference value before the power loss, and usual operation continues. If the time set in *L2-02* is expired, the drive detects *Uv1*. When you cancel the KEB Ride-Thru, the motor accelerates again, and usual operation continues.

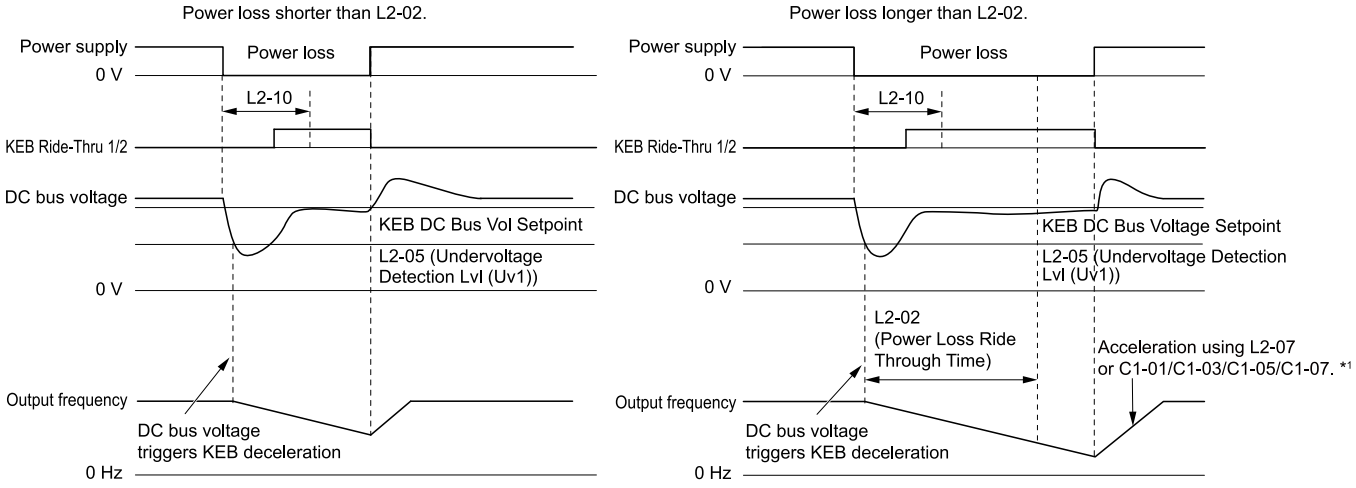

Figure 12.111 Use the Momentary Power Loss Ride-Thru Time and KEB Ride-Thru to Cancel KEB Operation

*1 When *L2-07 = 0.00*, the drive accelerates again as specified by the applicable *Acceleration Time [C1-01, C1-03, C1-05, C1-07]*, and usual operation continues.

Cancel KEB Operation When Restoration of Power Occurs while the Control Power (Power Supply to the Control Board) is Maintained

The following figure shows an example with this configuration:

- *L2-01 = 1, and L2-50 = 3 [KEB Stop Mode]* is set.
- KEB Ride-Thru is not used.

The drive starts deceleration through KEB operation. The drive decelerates for the time set in parameter *L2-10*, and then measures the DC bus voltage level. When the DC bus voltage is lower than the level set in *L2-11*, the drive uses the KEB Ride-Thru function to continue deceleration. When the DC bus voltage is more than the level set in *L2-11*, usual operation continues. The drive accelerates the motor to the frequency reference value before the power loss, and usual operation continues.

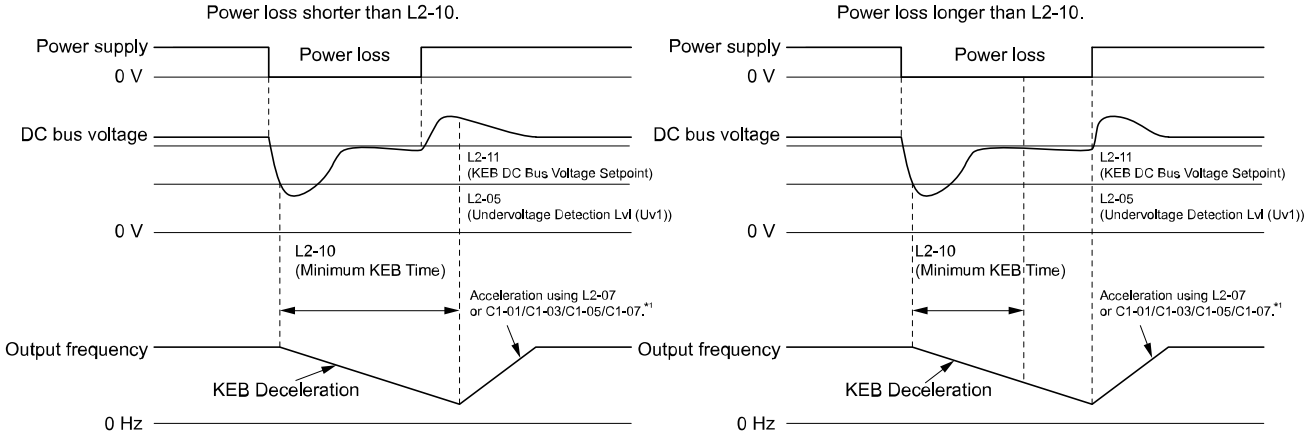

Figure 12.112 Cancel KEB Operation without Using the KEB Ride-Thru if Restoration of Power Occurs while the Control Power (Power Supply to the Control Board) is Maintained

*1 When *L2-07 = 0.00 s*, the drive accelerates again as specified by the applicable *Acceleration Time [C1-01, C1-03, C1-05, C1-07]*, and usual operation continues.

Use the KEB Ride-Thru to Cancel KEB Operation when Restoration of Power Occurs while the Control Power (Power Supply to the Control Board) is Maintained

The following figure shows an example with this configuration:

- *L2-01 = 1, and L2-50 = 1 [While CPU Active]*.

- Use *KEB Ride-Thru 1 [H1-xx = 40, 41]* or *KEB Ride-Thru 2 [H1-xx = 42, 43]*.

The drive starts deceleration through KEB operation. When the motor decelerates for the time set in *L2-10*, the drive measures the DC bus voltage and the status of the digital input set for KEB Ride-Thru. When the DC bus voltage is less than the level set in *L2-11*, or if the digital input set to KEB Ride-Thru is active, deceleration continues. When the DC bus voltage is more than the level set in *L2-11*, the drive ends KEB operation. The drive accelerates the motor to the frequency reference value before the power loss, and usual operation continues. When the KEB Ride-Thru continues to be input after the time set in *L2-02* is expired, the drive uses the KEB Ride-Thru function to continue to decelerate. When you cancel the KEB Ride-Thru, the motor accelerates again, and usual operation continues.

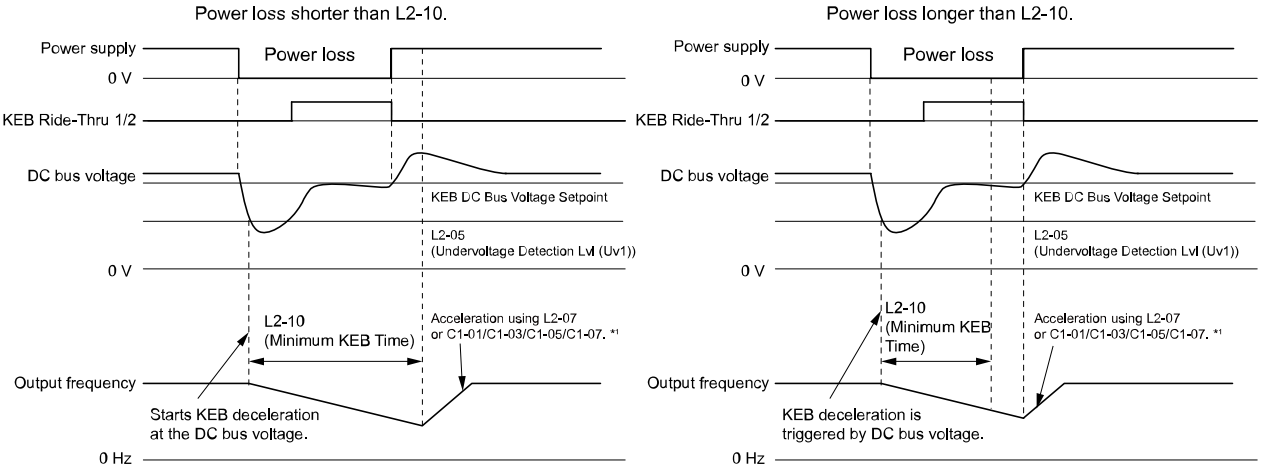

Figure 12.113 Use the KEB Ride-Thru to Cancel KEB Operation when Restoration of Power Occurs while the Control Power (Power Supply to the Control Board) is Maintained

*1 When *L2-07 = 0.00 s*, the drive accelerates again as specified by the applicable *Acceleration Time [C1-01, C1-03, C1-05, C1-07]*, and usual operation continues.

KEB Operation when L2-01 = 1, and L2-50 = 4 [KEB Decel to Stop]

The drive starts deceleration through KEB operation. If you do not input the Run command, the motor cannot restart. The drive will continue to decelerate until the motor comes to the minimum output frequency or a complete stop. If you return power during deceleration, the drive continues to decelerate.

■ KEB Operation Wiring Example

Figure 12.114 shows an example that uses an undervoltage relay to trigger the KEB Ride-Thru at power loss. When a power loss occurs, the undervoltage relay triggers *KEB Ride-Thru [H1-06 = 40, 41, 42, 43]* at terminal DI6.

Note:

- Configure the drive to turn ON the Run command while the KEB function is operating. If you turn off the Run command, the drive will not accelerate back to speed when you return power.
- A dynamic braking option is necessary for *System KEB1 Ride-Thru [L2-29 = 3]*..

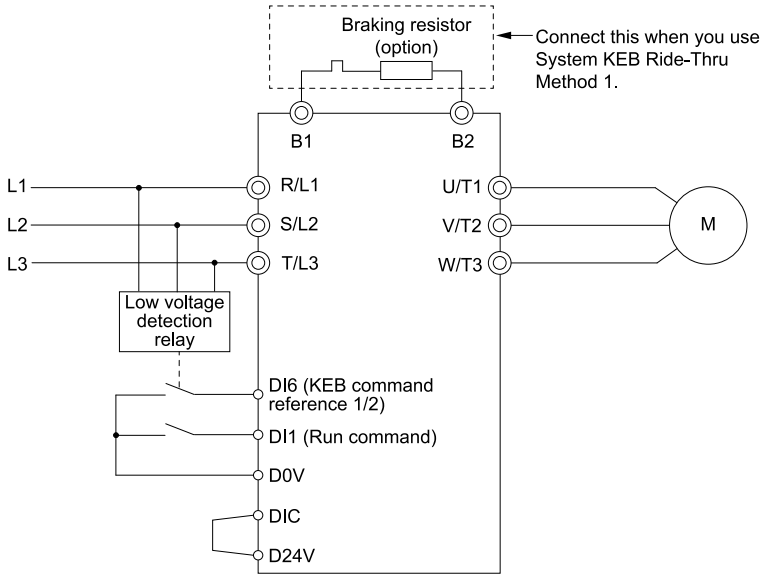

Figure 12.114 KEB Function Wiring Example

■ Parameters for KEB Ride-Thru

This table shows the parameters that adjust the KEB Ride-Thru function. Parameter settings are different for the different KEB methods set in *L2-29 [KEB Method]*.

Table 12.50 Parameters for KEB Ride-Thru

No.	Name	Configuring Settings	L2-29 [Kinetic Energy Backup Method]			
			0	1	2	3
C1-09	Fast Stop Time	• If *ov [Overvoltage]* occurs during KEB deceleration, increase the setting value. • If *Uv1 [DC Bus Undervoltage]* occurs during KEB deceleration, decrease the setting value.	x *1	-	-	-
C2-03	Jerk@Start of Decel	• If *ov* occurs immediately after you start KEB deceleration, increase the setting value. • If *Uv1* occurs immediately after you start KEB deceleration, decrease the setting value.	x	-	x	x
L2-05	UV Detection Lvl (Uv1)	If *Uv1* occurs immediately after you start KEB deceleration, increase the setting value to detect power loss more quickly.	x	x	x	x
L2-06	KEB Decel Time	• Kinetic Energy Backup Decel Time • If *ov* or *Uv1* occur during KEB deceleration after KEB Tuning, set *L2-06* in these conditions: – If *ov* occurs, increase the setting value – If *Uv1* occurs, decrease the setting value.	-	-	x *2	x *2
L2-07	KEB Accel Time	Sets the acceleration time to return to the frequency reference value before a power loss, after you cancel the KEB operation. When *L2-07 = 0*, the drive uses the standard acceleration times set in *C1-01, C1-03, C1-05, and C1-07 [Acceleration Time]*.	x	x	x	x
L2-08	Frq.Gain@KEB Start	• If *ov* occurs immediately after you start operation, decrease the setting value. • If *Uv1* occurs immediately after you start operation, increase the setting value.	x	-	x	x
L2-10	Minimum KEB Time	• With KEB Ride-Thru There is *Uv1* because you set a digital input for KEB Ride-Thru and the device that controls the input operated too slowly after power loss. • Without KEB Ride-Thru If the DC bus voltage overshoots immediately after KEB Ride-Thru starts, increase L2-10 to longer than the overshoot.	x	x	x	x
L2-11	KEB DC Volt Setpoint	• Single Drive KEB Ride-Thru 2 Set to approximately 1.22 x input voltage. • Single Drive KEB Ride-Thru 1, System KEB Ride-Thru 1, or System KEB Ride-Thru 2 Set to approximately 1.4 x input voltage.	x	x	x	x
L3-20	DCBus VoltAdj Gain	• If *ov* or *Uv1* occurs at the start of deceleration when you use KEB operation, increase this value in 0.1-unit increments. • If there is torque ripple during deceleration when you use KEB Ride-Thru, decrease the value.	-	x	-	-
L3-21	OVSup Acc/Dec Gain	If there is large speed or current ripple, decrease the value in 0.05 unit increments. **Note:** If the setting value is too low, then the drive will have unsatisfactory DC bus voltage control response. The drive can detect *ov* or *Uv1*.	-	x	-	-

No.	Name	Configuring Settings	L2-29 [Kinetic Energy Backup Method]			
			0	1	2	3
L3-24	Acc@Rated Torque	Set the motor acceleration time to the maximum frequency at the motor rated torque.	-	x	-	-
L3-25	Load Inertia Ratio	Sets the ratio between motor inertia and machine inertia.	-	x *3	-	-

*1 When *L2-29 = 1 [KEB Method = Single KEB1 Ride-Thru]* and you do KEB Auto-Tuning, the drive will automatically set *C1-09*. If you must not change the Fast Stop time, do not do KEB Tuning.
*2 If you do KEB Tuning when *L2-29 = 2, 3, or 4 [KEB Method = Single KEB2 Ride-Thru, System KEB1 Ride-Thru, or System KEB2 Ride-Thru]*, the drive will automatically set *L2-06 [KEB Decel Time]*.
*3 The drive sets this value automatically when KEB Tuning completes correctly.

■ L2-01: RideThru@PwrLoss

No. (Hex.)	Name	Description	Default (Range)
L2-01 (0485)	RideThru@PwrLoss	V/f OLV OLV/PM AOLV/PM EZOLV Sets the drive operation after a momentary power loss.	0 (0, 1)

The drive detects momentary power loss when the drive DC bus voltage is less than the value set in *L2-05 [UV Detection Lvl (Uv1)]*.

0 : Disabled

1 : Enabled

This mode is defined using *L2-50 [RidThruMode@PwrLoss]*.

Note:

When you set *L2-01 and L2-50*, make sure that you know these items:
- You can use a Momentary Power Loss Unit on models 2001 to 2042 and 4001 to 4023 for a longer momentary power loss ride through time. A Momentary Power Loss Unit makes it possible to continue operation of the drive after a maximum of 2 seconds of power loss.
- When you set *L2-01 = 1 and L2-50 = 0 to 3*, keep the magnetic contactor on the drive input side ON and keep the control signal while the drive does KEB operation.
- When *L2-01 = 1 and L2-50 = 1 to 4*, *Uv [DC Bus Undervoltage]* will flash on the keypad while the drive is attempting to recover from a momentary power loss. The drive will not output a fault signal at this time.
- When you use a magnetic contactor between the motor and the drive, keep the magnetic contactor closed while the drive does KEB operation or tries to restart with Speed Search.
- Keep the Run command active during KEB operation. The drive cannot accelerate back to the frequency reference when the power returns.
- When *L2-01 = 1 and L2-50 = 2 to 4*, if the control power supply voltage is less than the CPU operation level during KEB Ride-Thru, it will trigger *Uv1*.

■ L2-02: RideThrough Time@Power Loss

No. (Hex.)	Name	Description	Default (Range)
L2-02 (0486)	RideThrough Time@Power Loss	V/f OLV OLV/PM AOLV/PM EZOLV Sets the maximum time that the drive will wait until trying to restart after power loss.	Determined by o2-04, C6-01 (0.0 - 25.5 s)

This function is applicable when *L2-01 = 1 [RideThru@PwrLoss = Enabled] and L2-50 = 0, 2 [RidThruMode@PwrLoss = Timer Controlled, KEB Mode]*. If power loss operation is longer than the time set in this parameter, the drive will detect *Uv1 [DC Bus Undervoltage]*, turn OFF output, and the motor will coast to stop.

Note:
- The length of time that the drive can recover after a power loss changes when drive capacity changes.
- The upper limit of the possible momentary power loss Ride-Thru time changes when drive capacity changes.

■ L2-03: Min Baseblck Time

No. (Hex.)	Name	Description	Default (Range)
L2-03 (0487)	Min Baseblck Time	V/f OLV OLV/PM AOLV/PM EZOLV Sets the minimum time to continue the drive output block (baseblock) after a baseblock.	Determined by o2-04, C6-01 (0.1 - 5.0 s)

Sets the length of time that the drive will wait for the residual voltage in the motor to dissipate in estimation to the secondary circuit time constant of the motor. If *oC [Overcurrent]* or *ov [DC Bus Overvoltage]* occur at the start of Speed Search, after power returns, or during DC Injection Braking, increase this setting.

■ L2-04: Powloss Ramp Time@recovery

No. (Hex.)	Name	Description	Default (Range)
L2-04 (0488)	Powloss Ramp Time@recovery	V/f OLV OLV/PM AOLV/PM EZOLV Sets the time for the drive output voltage to go back to correct voltage after completing speed searches.	Determined by o2-04, C6-01 (0.0 - 5.0 s)

Sets the time for voltage to recover from 0 V to the value set in *E1-05 [Max Output Voltage]*.

■ L2-05: UV Detection Lvl (Uv1)

No. (Hex.)	Name	Description	Default (Range)
L2-05 (0489)	UV Detection Lvl (Uv1)	V/f OLV OLV/PM AOLV/PM EZOLV Sets the voltage at which a *Uv1 [DC Bus Undervoltage]* fault is triggered or at which the KEB function is activated. Usually it is not necessary to change this setting.	Determined by o2-04 and E1-01 (200 V Class: 150 - 210 V, 400 V Class: 300 - 420 V)

NOTICE: *Damage to Equipment. When you set this parameter to a value lower than the default, you must install an AC reactor on the input side of the power supply. If you do not install an AC reactor, it will cause damage to the drive circuitry.*

Note:

If the low voltage detection level is near the lower limit value of *L2-05*, the drive will detect *Uv1* during KEB Ride-Thru operation. Do not set the value too low when you use the KEB Ride-Thru function.

■ L2-06: KEB Decel Time

No. (Hex.)	Name	Description	Default (Range)
L2-06 (048A) Expert	KEB Decel Time	V/f OLV OLV/PM AOLV/PM EZOLV Sets the deceleration time during KEB operation used to decrease the maximum output frequency to 0.	0.0 s (0.0 - 6000.0 s)

Set *L2-29 = 3 or 4 [KEB Method = System KEB1 Ride-Thru or System KEB2 Ride-Thru]* to enable this function. When *L2-29 = 2 , 3, 4 [Single KEB2 Ride-Thru, System KEB1 Ride-Thru, System KEB2 Ride-Thru]* and you do KEB Auto-Tuning, the drive will automatically set this value.

Sets the deceleration time necessary to decelerate from the frequency reference to 0 Hz when the drive detects a momentary power loss. If a *Uv1 [DC Bus Undervoltage]* fault occurs during KEB operation, decrease the deceleration time. If an *ov [Overvoltage]* fault occurs, increase the deceleration time.

- *L2-06 = 0*
  The drive automatically decreases *C1-09 [Fast Stop Time]* to the base value to keep the DC bus voltage above the low voltage detection level. The drive ignores *L2-02 [RideThrough Time@Power Loss]* in this condition.
- *L2-06 ≠ 0*
  As shown in Figure 12.115, the frequency reference decelerates to the KEB frequency level as specified by the deceleration rate set in *L2-06* and then returns to the initial frequency reference as specified by *C1-01 [Accel Time 1]*. The drive uses the setting value of the KEB frequency rate as shown in the this formula to set the KEB frequency level:
  KEB frequency level = Output frequency before power loss × (1 - *(L2-02)/(L2-06)*)

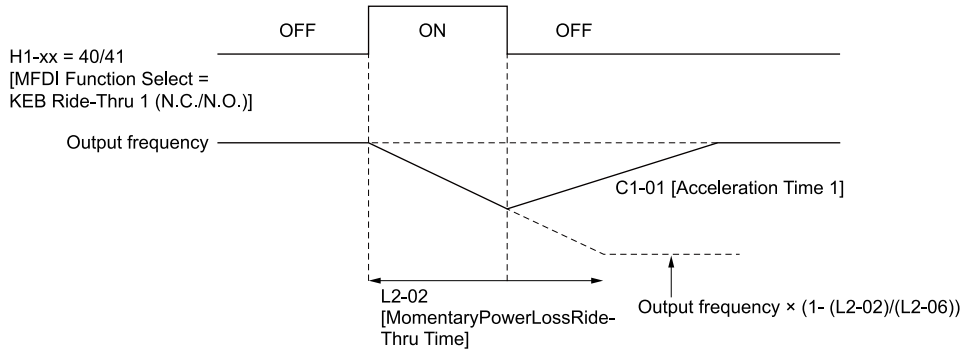

Figure 12.115 Kinetic Energy Backup Decel Time

■ L2-07: KEB Accel Time

No. (Hex.)	Name	Description	Default (Range)
L2-07 (048B) Expert	KEB Accel Time	V/f OLV OLV/PM AOLV/PM EZOLV Sets the acceleration time to return the frequency to the frequency reference before a power loss after canceling KEB operation.	0.0 s (0.0 - 6000.0 s)

Set this parameter to 0.0 to disable the function. The drive uses the acceleration time in *C1-01, C1-03, C1-05, and C1-07* to accelerate again after KEB operation completes.

■ L2-08: Frq.Gain@KEB Start

No. (Hex.)	Name	Description	Default (Range)
L2-08 (048C) Expert	Frq.Gain@KEB Start	V/f OLV OLV/PM AOLV/PM EZOLV Sets the quantity of output frequency reduction used when KEB operation starts as a percentage of the motor rated slip before starting KEB operation.	100% (0 - 300%)

Decreases the output frequency in steps to quickly set the motor to a regenerative condition. Use this formula to calculate the value:

Output frequency reduction = Motor rated slip before KEB operation × (*L2-08*/100) × 2

■ L2-09: KEB Min.Frq Level

No. (Hex.)	Name	Description	Default (Range)
L2-09 (048D) Expert	KEB Min.Frq Level	V/f OLV OLV/PM AOLV/PM EZOLV Sets the quantity of output frequency reduction used as a percentage of *E2-02 [Mot Rated Slip]* when KEB operation starts.	20% (0 - 100%)

These conditions set the quantity of decrease:

- Motor rated slip × (*L2-09*/100)
- The larger value between the value calculated with *L2-08* and the value calculated with *L2-09*

■ L2-10: Minimum KEB Time

No. (Hex.)	Name	Description	Default (Range)
L2-10 (048E) Expert	Minimum KEB Time	V/f OLV OLV/PM AOLV/PM EZOLV Sets the minimum length of time to operate the KEB after the drive detects a momentary power loss.	50 ms (0 - 25500 ms)

When you return power while KEB is operating, the drive continues KEB operation until the time set in *L2-10* is expired. When the DC bus voltage is less than the level of *L2-05 [UV Detection Lvl (Uv1)]* in one of these conditions, KEB operation continues until the time set in *L2-10* is expired:

- L2-01 = 1 and L2-50 = 2 [RideThru@PwrLoss = Enabled] and [RidThruMode@PwrLoss = KEB Mode].
- L2-01 = 1 and L2-50 = 3 [KEB Stop Mode]
- L2-01 = 1 and L2-50 = 4 [KEB Decel to Stop].
- KEB Ride-Thru 1/2 [H1-xx = 40, 41, 42, or 43] is input into the drive.

When you input KEB Ride-Thru, KEB operation continues after the time set in *L2-10* is expired. When you cancel KEB Ride-Thru, the motor accelerates again. When you do not input KEB Ride-Thru during the time set in *L2-10*, the drive accelerates to the frequency reference that the drive had before power loss in the applicable acceleration time.

When *L2-01 = 1 and L2-50 = 2, 3, or 4*, and the DC bus voltage is a minimum of the value of *L2-11 [KEB DC Volt Setpoint]*, the drive accelerates again after the time set in *L2-10* is expired. If the DC bus voltage is less than the *L2-11* value, KEB operation continues after the time set in *L2-10* is expired.

Note:
- When *L2-01 = 0 [Disabled]*, or *L2-01 = 1 and L2-50 = 0 or 1 [Timer Controlled or While CPU Active]*, increase the value of *L2-10*. Set *L2-10* to cancel KEB operation if the KEB Ride-Thru is not input
- Set this parameter to 0 to disable the function.

■ L2-11: KEB DC Volt Setpoint

No. (Hex.)	Name	Description	Default (Range)
L2-11 (0461) Expert	KEB DC Volt Setpoint	V/f OLV OLV/PM AOLV/PM EZOLV Sets the target value that controls the DC bus voltage to a constant level in Single Drive KEB Ride-Thru 2. Sets the DC bus voltage level that completes the KEB operation for all other KEB methods.	Determined by E1-01 (Determined by E1-01)

■ L2-29: KEB Method

No. (Hex.)	Name	Description	Default (Range)
L2-29 (0475) Expert	KEB Method	V/f OLV OLV/PM AOLV/PM EZOLV Sets the KEB function operation mode.	1 (1 - 4)

Set *L2-01 = 1 [RideThru@PwrLoss = Enabled]*, and *L2-50 = 2, 3, or 4 [RidThruMode@PwrLoss = KEB Mode, KEB Stop Mode, KEB Decel to Stop]* or *KEB Ride-Thru 1/2 [H1-xx = 40, 41, 42, or 43]*, to enable the KEB function.

1 : Single KEB1 Ride-Thru

The drive monitors the DC bus voltage and uses regenerative energy from the motor to hold the DC bus voltage at the level set in *L2-11 [KEB DC Volt Setpoint]*.

The KEB operation continues and the deceleration rate changes as specified by *C1-09 [Fast Stop Time]*.

Note:
- If the drive detects *Uv1 [DC Bus Undervoltage]* during KEB operation, decrease the value of *C1-09*.
- If the drive detects *ov [Overvoltage]* during KEB operation, increase the value of *C1-09*.

2 : Single KEB2 Ride-Thru

The drive does KEB operation and automatically calculates the deceleration rate to make sure that the main circuit electrical energy and main current voltage from motor regenerative energy is equal to *L2-11 [KEB DC Volt Setpoint]*.

3 : System KEB1 Ride-Thru

The drive does not monitor the DC bus voltage and decelerates as specified by the KEB deceleration time set in *L2-06*.

Set *L2-06* to the time necessary to decelerate from the frequency reference to 0 Hz when the drive detects a momentary power loss. The drive can decelerate and keep constant deceleration rates for more than one drive.

Note:

If you keep constant deceleration rates for more than one drive, it can trigger *ov* faults. Use the dynamic braking option with System KEB Ride-Thru 1 to prevent *ov* faults.

4 : System KEB2 Ride-Thru

The drive monitors the DC bus voltage and decelerates for the deceleration time set in *L2-06*.

If the DC bus voltage increases, the drive momentarily holds the frequency to prevent *ov* while deceleration continues.

Note:

When you cannot use a dynamic braking option, use System KEB Ride-Thru.

■ L2-30: KEB ZeroSpeed Operation

No. (Hex.)	Name	Description	Default (Range)
L2-30 (045E) Expert	KEB ZeroSpeed Operation	V/f OLV OLV/PM AOLV/PM EZOLV Sets the operation when the output frequency decreases below the zero level (DC braking injection starting frequency) during KEB deceleration when *L2-01 = 1 [RideThru@PwrLoss = Enabled]* and *L2-50 = 2 to 4 [RidThruMode@PwrLoss = KEB ModeKEB Stop Mode, or KEB Decel to Stop]*.	1 (1, 2)

1 : Baseblock

2 : DC/SC Braking

Does DC injection braking and short circuit braking as specified by *b2-04 [DCInj Time@Stop]* and *b2-13 [SCB Time@Stop]*.

■ L2-31: KEB StartV Offset Level

No. (Hex.)	Name	Description	Default (Range)
L2-31 (045D) Expert	KEB StartV Offset Level	V/f OLV OLV/PM AOLV/PM EZOLV Sets the KEB start voltage offset.	Determined by A1-02 (200 V Class: 0 - 100 V,400 V Class: 0 - 200 V)

The drive uses this formula to calculate the KEB start voltage:

KEB start voltage = *L2-05 [UV Detection Lvl (Uv1)] + L2-31*

■ L2-50 RidThruMode@PwrLoss

No. (Hex.)	Name	Description	Default (Range)
L2-50 (0453) Expert	RidThruMode@PwrLoss	V/f OLV OLV/PM AOLV/PM EZOLV Sets the drive operation after a momentary power loss..	0 (0 - 4)

0 : Timer Controlled

When power returns in the time set in *L2-02 [RideThrough Time@Power Loss]*, the drive will restart. If power does not return in the time set in *L2-02*, the drive will detect *Uv1*.

The drive momentarily turns OFF its output after a power loss. If the power returns in the time set to *L2-02*, the drive will do Speed Search and try to continue operation.

If the DC bus voltage is less than or equal to the *Uv1* detection level for the time set in *L2-02*, the drive will detect *Uv1* and output a fault signal.

Note:
- The necessary time for the drive to restart after power returns is different for different drive capacities.
- The upper limit of the possible momentary power loss Ride-Thru time is different for different drive models.

1 : While CPU Active

When power returns and the drive control circuit has power, the drive will restart. This will not trigger *Uv1*.

When there is a momentary power loss, the drive output will turn OFF. If the power returns and the drive control circuit has power, the drive will do Speed Search and try to continue operation. This will not trigger *Uv1*. This function lets the power loss be longer than when *L2-01 = 1*.

2 : KEB Mode

If power does not return in the time set in *L2-02*, the drive will detect *Uv1*.

When the drive detects momentary power loss, the drive will use regenerative energy from the motor through KEB operation to decelerate. When you return power in the time set in *L2-02*, the drive will accelerate to the frequency reference value that was used before the power loss. If you do not return power in the time set to *L2-02*, the drive will detect *Uv1* and the drive output will turn OFF. *L2-29 [KEB Method]* sets the type of KEB operation.

3 : KEB Stop Mode

When power returns and the drive control circuit has power, the drive will restart.

The drive decelerates using regenerative energy from the motor until the power returns and then restarts when a momentary power loss is detected. When power is restored during deceleration, the drive accelerates the motor again to the frequency reference value used before the power loss. If the motor comes to a stop before the power returns, the drive loses control power and the drive output shuts off. A *Uv1* is not triggered when power is restored while power to the CPU in the drive is maintained. The type of KEB operation is determined by *L2-29*.

4 : KEB Decel to Stop

When power returns, the drive will continue to decelerate until the motor fully stops.

If the drive detects momentary power loss, the drive will use regenerative energy from the motor and ramp to stop. When you return power to the drive, the drive will continue to decelerate until the motor comes to a full stop. After you return power, the drive will ramp to stop in the set deceleration time. *L2-29* sets the type of KEB operation.

Note:

When you set *L2-01 and L2-50*, make sure that you know these items:

- You can use a Momentary Power Loss Unit on models 2004 to 2056 and 4002 to 4031 for a longer momentary power loss ride through time. A Momentary Power Loss Unit makes it possible to continue operation of the drive after a maximum of 2 seconds of power loss.
- When you set *L2-01 = 1 and L2-50 = 0 to 3*, keep the magnetic contactor between the motor and the drive closed and keep the control signal while the drive does KEB operation.
- When you set *L2-01 = 1 and L2-50 = 1 to 4*, *Uv [Undervoltage]* will flash on the keypad while the drive tries to recover from a momentary power loss. The drive will not output a fault signal at this time.
- When you use a magnetic contactor between the motor and the drive, keep the magnetic contactor closed while the drive does KEB operation or tries to restart with Speed Search.
- Keep the Run command active during KEB operation. The drive cannot accelerate back to the frequency reference when the power returns.
- When you set *L2-01 = 1 and L2-50 = 2 to 4*, if the control power supply voltage is less than the CPU operation level during KEB Ride-Thru, it will trigger *Uv1*.

◆ L3: STALL PREVENTION

L3 parameters set the Stall Prevention function and overvoltage suppression function.

■ Stall Prevention

If the load is too heavy or the acceleration and deceleration times are too short, the motor can slip too much because it cannot work at the same rate as the frequency reference. If the motor stalls during acceleration, current increases as the slip increases to cause an *oC [Overcurrent]*, *oL2 [Drive Overload]*, or *oL1 [Motor Overload]* and the drive will stop. If the motor stalls during deceleration, too much regenerative power will flow back into the DC bus capacitors, and cause the drive to fault out from *ov [Overvoltage]* and the drive will stop.

The stall prevention function will let the motor get to the set speed without stalling and it is not necessary for you to change the acceleration or deceleration time settings. You can set a separate stall prevention functions for acceleration, operating at constant speeds, and deceleration.

■ Overvoltage Suppression Function

Decreases the regenerative torque limit and increases the output frequency when the DC bus voltage increases to prevent *ov*. This function can drive loads with cyclic regenerative operation, for example punch presses or other applications with repeated crank movements. When you use this function, set *L3-11 = 1 [Overvolt Supression Select = Enabled]*.

The drive adjusts the regenerative torque limit and the output frequency during overvoltage suppression to make sure that the DC bus voltage is not more than the level set in *L3-17 [DCBus Regul.Level]*.

Set these parameters as necessary when you use the overvoltage suppression function:

- *L3-20 [DCBus VoltAdj Gain]*
- *L3-21 [OVSup Acc/Dec Gain]*
- *L3-24 [Acc@Rated Torque]*
- *L3-25 [Load Inertia Ratio]*

Note:

- When overvoltage suppression is triggered, the motor speed is more than the frequency reference. Do not use overvoltage suppression for applications where the frequency reference and the motor speed must align.
- When you use a braking resistor, set *L3-11 = 0 [Disabled]*.
- The overvoltage suppression function is enabled only when you operate immediately below the maximum frequency. Overvoltage suppression does not increase the output frequency to more than the maximum frequency. Make sure that the motor and machine specifications are correct for the application, then increase the maximum frequency.
- If there is a sudden increase to a regenerative load, *ov* can occur.

■ L3-01: StallP Mode@Accel

No. (Hex.)	Name	Description	Default (Range)
L3-01 (048F)	StallP Mode@Accel	V/f OLV **OLV/PM** AOLV/PM **EZOLV** Sets the method of the Stall Prevention During Acceleration.	2 (1 - 4)

Note:

When *A1-02 = 5 [Control Method = PM OLVector]*, the setting range is *0 and 1*.

Stall prevention during acceleration prevents the stalling and stopping of motors when *oC [Overcurrent]*, *oL2 [Drive Overloaded]*, or *oL1 [Motor Overload]* is detected in cases of significant loads applied during acceleration or sudden acceleration times regarding load inertia are set.

1 : Disabled

The Stall Prevention function does not operate during acceleration, and acceleration occurs for the set acceleration time. If the acceleration time is too short, the motor will not fully accelerate during the set time, which causes the drive to detect *oL1* or *oL2* and the motor to stop.

2 : General Purpose

Enables the Stall Prevention During Acceleration function. Operation is different for different control methods.

- **V/f Control, Open Loop Vector Control, or EZ Open Loop Vector Control**
  When the output current is more than the value set in *L3-02 [StallP Level@Accel]*, the drive stops acceleration. Deceleration is stopped once the output current falls below the value set in *L3-02* - 15%. The Stall Prevention function level automatically falls for constant output ranges.

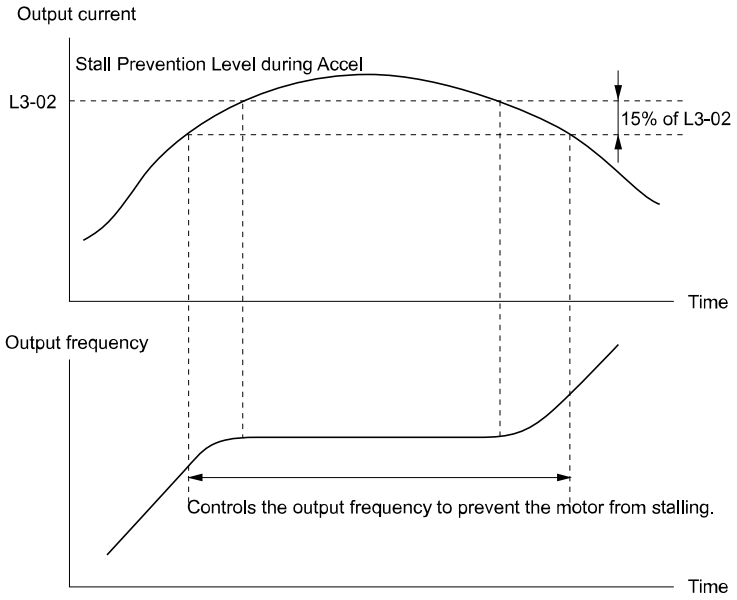

Figure 12.116 Stall Prevention During Acceleration when Using Induction Motors

- **Open Loop Vector Control for PM**
  When the output current is more than the value set in *L3-02*, the drive stops acceleration. When the time set in *L3-27 [StallP Detect Time]* is expired and the output current is larger than in *L3-02*, the drive will start deceleration in as specified by *L3-22 [StallP@Acc Deceleration Time]*. The drive starts acceleration again once the output current falls below the value set in *L3-02* - 15%. When the time set in *L3-27* is expired, the drive starts acceleration again.

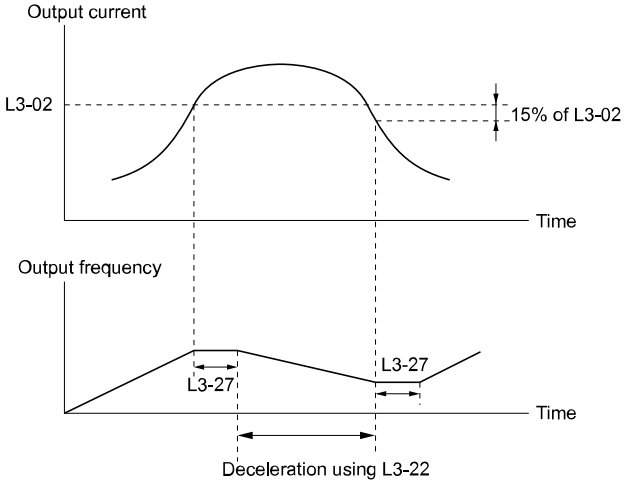

Figure 12.117 Stall Prevention During Acceleration Function in OLV/PM

3 : Intelligent Accel

The drive ignores the acceleration time setting and the drive starts to accelerate in the minimum length of time. The drive automatically adjusts the acceleration rate to make sure that the output current is not more than *L3-02*.

4 : ILim Mode

This function uses the *L3-02* value to limit the output current and automatically adjusts the acceleration rate. When the load (output current) increases to more than the current limit level during acceleration, the drive automatically adjusts the acceleration rate.

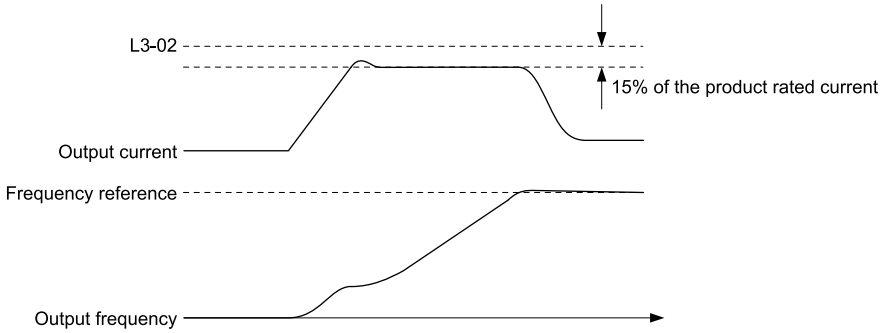

Figure 12.118 Current Limit Acceleration

■ L3-02: StallP Level@Accel

No. (Hex.)	Name	Description	Default (Range)
L3-02 (0490)	StallP Level@Accel	V/f OLV OLV/PM AOLV/PM EZOLV Sets the output current level at which the Stall Prevention function operates during acceleration where the drive rated output current is 100%.	Determined by C6-01 and L8-38 (0 - 150%)

Note:

- If you use a motor that is small compared to the drive and the motor stalls, decrease the setting value.
- When you operate the motor in the constant power range, set *L3-03 [StallP Limit@Accel]*.
- The upper limit to the setting range changes when the setting for *C6-01 [ND/HD Duty Selection]* changes.
  - 150% when *C6-01 = 0 [HD Rating]*
  - 120% when *C6-01 = 1 [ND Rating]*

■ L3-03: StallP Limit@Accel

No. (Hex.)	Name	Description	Default (Range)
L3-03 (0491)	StallP Limit@Accel	V/f OLV OLV/PM AOLV/PM EZOLV Sets the lower limit for the stall prevention level used in the constant output range as a percentage of the drive rated output current.	50% (0 - 100%)

The stall prevention level set in *L3-02 [StallP Level@Accel]* is automatically reduced when the motor is running within the constant output range. Parameter *L3-03* is the limit value used to prevent the stall prevention level during constant output ranges to fall below the minimum required level.

Note:

The function to automatically reduce the stall prevention level does not operate when *L3-01 = 4 [StallP Mode@Accel = ILim Mode]*.

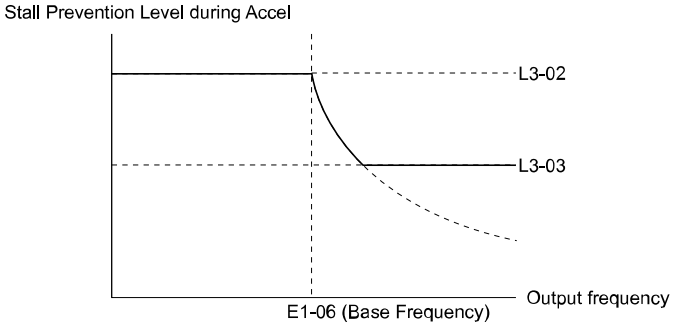

Figure 12.119 Stall Prevent Level during Accel/Limit

■ L3-04: StallP@Decel Enable

No. (Hex.)	Name	Description	Default (Range)
L3-04 (0492)	StallP@Decel Enable	V/f OLV OLV/PM AOLV/PM EZOLV Enables Stall Prevention during deceleration.	1 (0, 1)

0 : Disabled

1 : Enabled

■ L3-05: StallP@RUN Enable

No. (Hex.)	Name	Description	Default (Range)
L3-05 (0493)	StallP@RUN Enable	V/f OLV OLV/PM AOLV/PM EZOLV Enables Stall Prevention during Run.	Determined by A1-02 (0 - Determined by A1-02)

Stall Prevention function during run prevents the motor from stalling by automatically reducing the speed when an *oL1 [Motor Overload]* occurs while the motor is running at constant speed.

Note:
- An output frequency less than 6 Hz disables Stall Prevention during Run. The setting values of *L3-05* and *L3-06 [StallP Level@Run]* do not have an effect.

0 : Disabled

1 : Enabled

■ L3-06: StallP Level@Run

No. (Hex.)	Name	Description	Default (Range)
L3-06 (0494)	StallP Level@Run	V/f OLV OLV/PM AOLV/PM EZOLV Sets the output current level at which the Stall Prevention function is enabled during run when the drive rated output current is 100%.	Determined by C6-01 and L8-38 (5 - 150%)

Note:
- This parameter is applicable when *L3-05 = 1 [StallP@RUN Enable = Enabled]* and *L3-51 = 0, 1 [StallP@RUNDecTime = Dec Time 1 (C1-02), Dec Time 2 (C1-04)]*.
- When *L3-23 = 2 [CHP Stall P Selection = Automatic Reduction]*, the drive will automatically decrease the level in the constant power range.

Use an Analog Input to Change the Stall Prevent Level during Run

When *H3-xx = 14 [MFAI Function Select = StallPLev@Rn]*, you can use the input gain and bias settings for terminals AI1 and AI2 to change the stall prevention level during run.

If you set the input level for terminals AI1 and AI2 *[H3-xx = 14]* and *L3-06*, the drive will use the smaller value for Stall Prevent Level during Run.

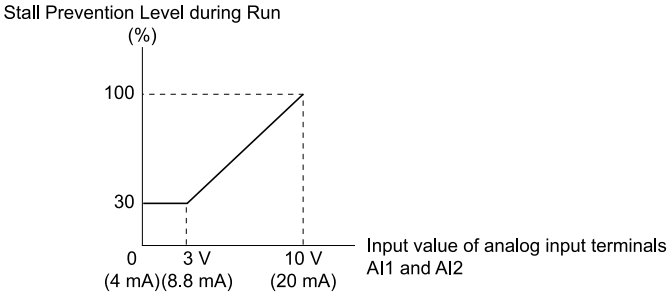

Figure 12.120 Stall Prevention Level during Run with Analog Input

■ L3-11: Overvolt Supression Select

No. (Hex.)	Name	Description	Default (Range)
L3-11 (04C7)	Overvolt Supression Select	V/f OLV OLV/PM AOLV/PM EZOLV Sets the overvoltage suppression function.	0 (0, 1)

0 : Disabled

The drive does not adjust the regenerative torque limit or the output frequency. If you apply a regenerative load, the drive can detect an *ov [Overvoltage]* fault. Use this setting with a dynamic braking option.

1 : Enabled

When a regenerative load increases the DC bus voltage, the drive decreases the regenerative torque limit and increases the output frequency to prevent *ov*

■ L3-17: DCBus Regul.Level

No. (Hex.)	Name	Description	Default (Range)
L3-17 (0462)	DCBus Regul.Level	V/f OLV OLV/PM AOLV/PM EZOLV Sets the target value for the DC bus voltage when the overvoltage suppression function and the Decel Stall Prevention function (Intelligent Stall Prevention) are active.	200 V Class: 375 V, 400 V: 750 V (200 V Class: 150 to 400 V, 400 V Class: 300 to 800 V)

Note:

This value is initialized when *E1-01 [Input AC Supply Voltage]* is changed.

Sets this parameter for any of the following circumstances.

- *L3-11 = 1 [Overvolt Supression Select = Enabled]*.
- *L3-04 = 1 [StallP@Decel Enable = Enabled]* and *L3-50 = 1 [StallP@Decel Mode = Automatic Decel Reduction]*.

■ L3-20: DCBus VoltAdj Gain

No. (Hex.)	Name	Description	Default (Range)
L3-20 (0465) Expert	DCBus VoltAdj Gain	V/f OLV OLV/PM AOLV/PM EZOLV Sets the proportional gain used to control the DC bus voltage.	Determined by A1-02 (0.00 - 5.00)

Set one of these parameters to enable L3-20:

- *L2-29 = 2 [KEB Method = Single KEB2 Ride-Thru]*
- *L3-04 = 1 [StallP@Decel Enable = Enabled]* and *L3-50 = 1 [StallP@Decel Mode = Automatic Decel Reduction]*
- *L3-11 = 1 [Overvolt Supression Select = Enabled]*
- *H1-xx = 42 or 43 [MFDI Function Select = KEB Thru2 NC or KEB Thru2 NO]*

Note:

- If stall prevention during deceleration function causes *ov [Overvoltage]* and *Uv1 [DC Bus Undervoltage]* faults when you start deceleration and *L2-29 = 1, H1-xx = 42 or 43*, or *L3-04 = 1* and *L3-50 = 1*, gradually increase this parameter in 0.1-unit increments. If the setting value is too high, it can cause large speed or current ripples.
- If sudden increases in the regenerative load cause *ov* faults and *L3-11* = 1, gradually increase this parameter in 0.1-unit increments. If the setting value is too high, it can cause large speed or current ripples.

■ L3-21: OVSup Acc/Dec Gain

No. (Hex.)	Name	Description	Default (Range)
L3-21 (0466) Expert	OVSup Acc/Dec Gain	V/f OLV OLV/PM AOLV/PM EZOLV Sets the proportional gain to calculate acceleration and deceleration rates.	Determined by A1-02 (0.10 - 10.00)

Set one of these parameters to enable L3-21:

- *L2-29 = 2 [KEB Method = Single KEB2 Ride-Thru]*
- *L3-04 = 1 [StallP@Decel Enable = Enabled]* and *L3-50 = 1 [StallP@Decel Mode = Automatic Decel Reduction]*
- *L3-11 = 1 [Overvolt Supression Select = Enabled]*
- *H1-xx = 42 or 43 [MFDI Function Select = KEB Thru2 NC or KEB Thru2 NO]*

Note:

- If stall prevention during deceleration function causes *ov [Overvoltage]* and *Uv1 [DC Bus Undervoltage]* faults when you start deceleration and *L2-29 = 1, H1-xx = 42 or 43*, or *L3-04 = 1* and *L3-50 = 1*, gradually increase this parameter in 0.1-unit increments. If the setting value is too high, it can cause large speed or current ripples.
- If sudden increases in the regenerative load cause *ov* faults and *L3-11* = 1, gradually increase this parameter in 0.1-unit increments. If the setting value is too high, it can cause large speed or current ripples.

■ L3-22: StallP@Acc Deceleration Time

No. (Hex.)	Name	Description	Default (Range)
L3-22 (04F9)	StallP@Acc Deceleration Time	V/f OLV **OLV/PM** AOLV/PM EZOLV Sets the momentary deceleration time that the drive will use when it tries to accelerate a PM motor and detected motor stalls. This function is applicable when *L3-01 = 2 [StallP Mode@Accel = General Purpose]*.	0.0 s (0.0 - 6000.0 s)

Set this parameter to 0.0 s to disable this function. The drive will decelerates in the deceleration time applicable at the time when a motor stall occurs.

■ L3-23: CHP Stall P Selection

No. (Hex.)	Name	Description	Default (Range)
L3-23 (04FD)	CHP Stall P Selection	**V/f** OLV **OLV/PM** AOLV/PM EZOLV Sets the function to automatically decrease the Stall Prevention Level during Run for constant output ranges.	1 (1, 2)

1 : Level@L3-06

The drive uses the level set in *L3-06 [StallP Level@Run]* through the full speed range.

2 : Automatic Reduction

The drive decreases the Stall Prevention level during run in the constant power range. The lower limit is 40% of *L3-06* value.

■ L3-24: Acc@Rated Torque

No. (Hex.)	Name	Description	Default (Range)
L3-24 (046E) Expert	Acc@Rated Torque	**V/f** OLV **OLV/PM** AOLV/PM EZOLV Sets the motor acceleration time to reach the maximum frequency at the motor rated torque for stopped single-drive motors.	Determined by o2-04, C6-01, E2-11, and E5-01 (0.001 - 10.000 s)

Set one of these parameters to enable L3-20:

- *L2-29 = 2 [KEB Method = Single KEB2 Ride-Thru]*
- *L3-04 = 1 [StallP@Decel Enable = Enabled]* and *L3-50 = 1 [StallP@Decel Mode = Automatic Decel Reduction]*
- *L3-11 = 1 [Overvolt Supression Select = Enabled]*
- *H1-xx = 42 or 43 [MFDI Function Select = KEB Thru2 NC or KEB Thru2 NO]*

Note:

When Auto-Tuning changes the value of *E2-11 [Motor Rated Power (kW)]*, the drive will automatically set *this parameter* to the value for a Yaskawa standard motor (4 poles). When you use a PM motor, the drive uses the value in *E5-01 [PM Mot Code Selection]* to change *L3-24*.

■ L3-25: Load Inertia Ratio

No. (Hex.)	Name	Description	Default (Range)
L3-25 (046F) Expert	Load Inertia Ratio	**V/f** OLV **OLV/PM** AOLV/PM EZOLV Sets the ratio between motor inertia and machine inertia.	1.0 (0.1 - 1000.0)

Set one of these parameters to enable L3-20:

- *L2-29 = 2 [KEB Method = Single KEB2 Ride-Thru]*
- *L3-04 = 1 [StallP@Decel Enable = Enabled]* and *L3-50 = 1 [StallP@Decel Mode = Automatic Decel Reduction]*
- *L3-11 = 1 [Overvolt Supression Select = Enabled]*
- *H1-xx = 42 or 43 [MFDI Function Select = KEB Thru2 NC or KEB Thru2 NO]*

Note:

- If you set this value incorrectly when *L2-29 = 1*, *H1-xx = 42 or 43*, or *L3-11 = 1*, it can cause large current ripples and *ov [Overvoltage]*, *Uv1 [DC Bus Undervoltage]*, or *oC [Overcurrent]* faults.
- KEB Tuning will automatically set this value.

■ L3-26: DC Bus Capacitors Extension

No. (Hex.)	Name	Description	Default (Range)
L3-26 (0455) Expert	DC Bus Capacitors Extension	V/f OLV OLV/PM AOLV/PM EZOLV Sets the capacity for external main circuit capacitors. Usually it is not necessary to change this setting. Sets this parameter when you use the KEB Ride-Thru function.	0 µF (0 to 65000 µF)

■ L3-27: StallP Detect Time

No. (Hex.)	Name	Description	Default (Range)
L3-27 (0456)	StallP Detect Time	V/f OLV OLV/PM AOLV/PM EZOLV Sets a delay time between reaching the Stall Prevention level and starting the Stall Prevention function.	60 ms (0 - 5000 ms)

■ L3-34: Torque Lim.Delay Time

No. (Hex.)	Name	Description	Default (Range)
L3-34 (016F) Expert	Torque Lim.Delay Time	V/f OLV OLV/PM AOLV/PM EZOLV Sets the filter time constant that returns the torque limit to its initial value when KEB operation operates in Single Drive KEB Ride-Thru mode.	Determined by A1-02 (0.000 - 1.000 s)

When vibration occurs during operation of Single Drive KEB Ride-Thru 2, increase this parameter in 0.010-unit increments.

Note:

The Single Drive KEB Ride-Thru 2 mode operates when *L2-29 = 2 [KEB Method = Single KEB2 Ride-Thru]* and *H1-xx = 42 or 43 [Terminal DIx Function Select = KEB Thru2 NC or KEB Thru2 NO]*.

■ L3-35: SpAgree Width@StallP

No. (Hex.)	Name	Description	Default (Range)
L3-35 (0747) Expert	SpAgree Width@StallP	V/f OLV OLV/PM AOLV/PM EZOLV Sets the width for speed agreement when *L3-04 = 1 [StallP@Decel Enable = Enabled]* and *L3-50 = 1 [StallP@Decel Mode = Automatic Decel Reduction]*. Usually it is not necessary to change this setting.	0.00 Hz (0.00 - 1.00 Hz)

Set this parameter when hunting occurs while you use a frequency reference through an analog input.

■ L3-36: VibSup Gain@Accel

No. (Hex.)	Name	Description	Default (Range)
L3-36 (11D0)	VibSup Gain@Accel	V/f OLV OLV/PM AOLV/PM EZOLV Sets the gain to suppress current and motor speed hunting during operation when *L3-01 = 4 [StallP Mode@Accel = ILim Mode]*. Usually it is not necessary to change this setting.	Determined by A1-02 (0.0 - 100.0)

If there is vibration in the output current during acceleration, increase the setting value.

Note:

Set *L3-01 = 4 [StallP Mode@Accel = ILim Mode]* to enable this function.

■ L3-37: CurLim ITime@Accel

No. (Hex.)	Name	Description	Default (Range)
L3-37 (11D1) Expert	CurLim ITime@Accel	V/f OLV OLV/PM AOLV/PM EZOLV Suppresses current hunting during acceleration. Usually it is not necessary to change this setting.	5 ms (0 - 100 ms)

Note:

Set *L3-01 = 4 [StallP Mode@Accel = ILim Mode]* to enable this function.

■ L3-38: CurLim PGain@Accel

No. (Hex.)	Name	Description	Default (Range)
L3-38 (11D2) Expert	CurLim PGain@Accel	V/f OLV OLV/PM AOLV/PM EZOLV Suppresses current hunting and overshooting that occurs when the drive stalls during acceleration. Usually it is not necessary to change this setting.	10.0 (0.0 - 100.0)

Note:

Set *L3-01 = 4 [StallP Mode@Accel = ILim Mode]* to enable this function.

■ L3-39: CurLim Filt@Accel

No. (Hex.)	Name	Description	Default (Range)
L3-39 (11D3)	CurLim Filt@Accel	V/f OLV OLV/PM AOLV/PM EZOLV Sets the time constant to adjust the acceleration rate when *L3-01 = 4 [StallP Mode@Accel = ILim Mode]*. Usually it is not necessary to change this setting.	100.0 ms (1.0 - 1000.0 ms)

Note:

Set *L3-01 = 4 [StallP Mode@Accel = ILim Mode]* to enable this function.

■ L3-40: CurLim SCurve@Acc/Dec

No. (Hex.)	Name	Description	Default (Range)
L3-40 (11D4)	CurLim SCurve@Acc/Dec	V/f OLV OLV/PM AOLV/PM EZOLV Sets the function to enable and disable the best S-curve characteristic used for current-limited acceleration.	0 (0, 1)

Makes the best motor acceleration rate for start up. If you set this parameter to 1, it will make acceleration smoother, but it can also increase the acceleration time to be longer than the set time. If the drive detects *oC [Overcurrent]* faults immediately after acceleration starts, set this parameter.

0 : Disabled

1 : Enabled

Note:

Set *L3-01 = 4 [StallP Mode@Accel = ILim Mode]* to enable this function.

■ L3-50 StallP@Decel Mode

No. (Hex.)	Name	Description	Default (Range)
L3-50 (0458)	StallP@Decel Mode	V/f OLV OLV/PM AOLV/PM EZOLV Sets the method that the drive will use to prevent overvoltage faults when decelerating.	0 (Determined by A1-02)

Note:

1. To connect a dynamic braking option (braking resistor or braking resistor unit) to the drive, set this parameter to *0 or 3*. Parameter values *1, 2, 4, and 5* will enable Stall Prevention function during deceleration, and the dynamic braking option will not function.
2. The setting range changes when the *A1-02 [Control Method]* value changes:
   - When *A1-02 = 5 [PM OLVector]*, setting range is *0 to 2*
   - When *A1-02 = 6, or 8 [PM AOLVector, or EZ Vector]*, setting range is *0, 1*.

Stall Prevention during deceleration controls the deceleration as specified by the DC bus voltage and does not let high inertia or fast deceleration cause *ov [Overvoltage]* faults.

0 : General Purpose

The drive decelerates as specified by the deceleration time. When the DC bus voltage is more than the Stall Prevention level, the drive stops deceleration until the DC bus voltage is less than the Stall Prevention Level. The drive then starts to decelerate at the set deceleration time. Frequent use of Stall Prevention will help prevent *ov* faults when the deceleration time is shorter than the drive can usually accept.

Note:

The Decel Stall Prevention function will increase the deceleration time to stop and the deceleration time will be longer than the setting. This function is not applicable for conveyor applications because the precision of the stop position is very important. As an alternative, use a dynamic braking option in these applications.

The input voltage setting of *E1-01 [Input AC Supply Voltage]* sets the DC bus voltage level for Stall Prevention.

Table 12.51 Stall Prevention Level during Deceleration

Drive Input Voltage	Stall Prevention Level during Deceleration
400 V class	754 V

Figure 12.121 shows the Stall Prevention during deceleration function.

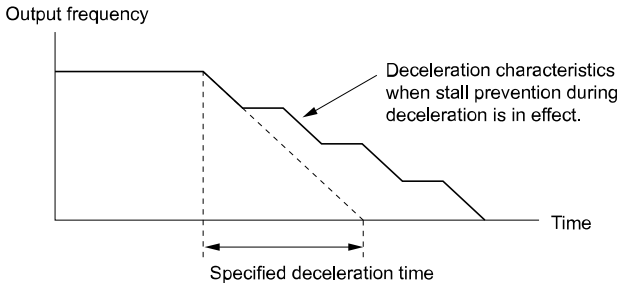

Figure 12.121 Stall Prevention Operation during Deceleration

1 : Automatic Decel Reduction

The drive adjusts the deceleration rate to keep the DC bus voltage at the *L3-17 [DCBus Regul.Level]* level. This makes the shortest possible deceleration time and will not let the motor stall. The drive ignores the selected deceleration time and the possible deceleration time cannot be less than 1/10 of the set deceleration time.

This function uses these parameters to adjust the deceleration rate:

- *L3-20 [DCBus VoltAdj Gain]*
- *L3-21 [OVSup Acc/Dec Gain]*
- *L3-24 [Acc@Rated Torque]*
- *L3-25 [Load Inertia Ratio]*

Note:

The deceleration time is not constant. For applications where the precision of the stop position is very important, use a dynamic braking option and set *L3-04 = 0*. If an *ov* occurs, set *L3-04 = 3*.

2 : Gen Purpose w/ DB Resistor

A braking resistor is necessary for this setting. The braking resistor and the drive work together for the Stall Prevention during deceleration function.

3 : HiFlux Overexcitation

Enables Overexcitation/High Flux and enables a shorter deceleration time than when *L3-04 = 0*.

Note:

- If the overexcitation time is long and you decelerate frequently, the drive can detect *oL1 [Motor Overload]* faults. If the drive detects *oL1*, decrease the deceleration time or install a braking resistor to the drive.
- The deceleration time during Overexcitation Deceleration changes when the motor characteristics and machine inertia change. Adjust the *n3-13 [OverExcBr Gain]* and *n3-23 [OverExcBr Operation]* levels. Refer to “n3: HIGHSLIP/OVEREXCITATION BRAKE” for more information.

4 : HiFlux2 Overexcitation

Enables Overexcitation/High Flux 2. This function decreases the possible deceleration time more than Overexcitation/High Flux.

The drive decreases motor speed and tries to keep the DC bus voltage at the *L3-17* level.

If the drive detects *oL1*, decrease the values set in *n3-13* and *n3-21*. If the drive detects *ov*, increase the values set in *C1-02, C1-04, C1-06, and C1-08 [Decel Time 4]*.

Note:

- During Overexcitation/High Flux 2, the drive disables Hunting Prevention in V/f Control and also disables Speed Control that uses torque limit in OLV Control.
- Refer to “n3: HIGHSLIP/OVEREXCITATION BRAKE” for more information.

■ L3-51 StallP@RUNDecTime

No. (Hex.)	Name	Description	Default (Range)
L3-51 (0459)	StallP@RUNDecTime	V/f OLV OLV/PM AOLV/PM EZOLV Sets the function to enable and disable Stall Prevention During Run.	0 (Determined by A1-02)

0 : Dec Time 1 (C1-02)

1 : Dec Time 2 (C1-04)

◆ L4: SPEED DETECTION

L4 parameters set the output of signals to the MFDO terminals, for example frequency agree and speed detection.

■ L4-01: SpAgree Det.Level

No. (Hex.)	Name	Description	Default (Range)
L4-01 (0499)	SpAgree Det.Level	V/f OLV OLV/PM AOLV/PM EZOLV Sets the level to detect speed agree or motor speed.	Determined by A1-02 (Determined by A1-02)

Sets the level to detect speed agree or motor speed when *H2-01 to H2-03 = F, 10, 13, 14 [NO,NC,CM FuncSelection to DO2-O2C Func Selection = SpeedAgree1, USpeedAgree1, FreqDetect 1, FreqDetect 2]*.

■ L4-02: SpAgree Det.Width

No. (Hex.)	Name	Description	Default (Range)
L4-02 (049A)	SpAgree Det.Width	V/f OLV OLV/PM AOLV/PM EZOLV Sets the width to detect speed agree or motor speed.	Determined by A1-02 (Determined by A1-02)

Sets the width to detect speed agree or motor speed when *H2-01 to H2-03 = F, 10, 13, 14 [NO,NC,CM FuncSelection to DO2-O2C Func Selection = SpeedAgree1, USpeedAgree1, FreqDetect 1, FreqDetect 2]*.

■ L4-03: SpAgree Det.Level(+/-)

No. (Hex.)	Name	Description	Default (Range)
L4-03 (049B)	SpAgree Det.Level(+/-)	V/f OLV OLV/PM AOLV/PM EZOLV Sets the level to detect speed agree or motor speed.	Determined by A1-02 (Determined by A1-02)

Sets the level to detect speed agree or motor speed when *H2-01 to H2-03 = 11, 12, 15, 16 [NO,NC,CM FuncSelection to DO2-O2C Func Selection = SpeedAgree2, USpeedAgree2, FreqDetect 3, FreqDetect 4]*.

■ L4-04: SpAgree Det.Width(+/-)

No. (Hex.)	Name	Description	Default (Range)
L4-04 (049C)	SpAgree Det.Width(+/-)	V/f OLV OLV/PM AOLV/PM EZOLV Sets the width to detect speed agree or motor speed.	Determined by A1-02 (Determined by A1-02)

Sets the width to detect speed agree or motor speed when *H2-01 to H2-03 = 11, 12, 15, 16 [NO,NC,CM FuncSelection to DO2-O2C Func Selection = SpeedAgree2, USpeedAgree2, FreqDetect 3, FreqDetect 4]*.

■ L4-05: FrefLoss Det.Selection

No. (Hex.)	Name	Description	Default (Range)
L4-05 (049D)	FrefLoss Det.Selection	V/f OLV OLV/PM AOLV/PM EZOLV Sets the operation when the drive detects a loss of frequency reference.	1 (1, 2)

Enables the detection of a loss of an analog frequency reference when MFAI terminals (AI1 and AI2) input the frequency reference. Set *H2-01 to H2-03 = 4B [MFDO Function Select = FreqRef Loss]* to enable this function.

If the frequency reference is less than 10% in 400 ms, the drive detects frequency reference loss.

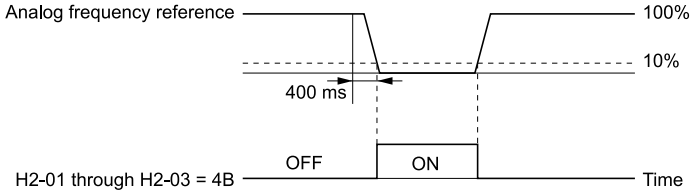

Figure 12.122 Detection of Frequency Reference Loss

1 : Stop

The drive follows the frequency reference and stops the motor.

2 : Run@L4-06PrevRef

The drive continues to operate at the frequency reference value set in *L4-06 [Freq.Ref@RefLoss]*. When you return the external frequency reference value, the drive continues to operate with the frequency reference.

■ L4-06: Freq.Ref@RefLoss

No. (Hex.)	Name	Description	Default (Range)
L4-06 (04C2)	Freq.Ref@RefLoss	V/f OLV OLV/PM AOLV/PM EZOLV Sets the frequency reference as a percentage to continue drive operation after it detects a frequency reference loss. The value is a percentage of the frequency reference before the drive detected the loss.	80.0% (0.0 - 100.0%)

Set *L4-05 = 2 [FrefLoss Det.Selection = Run@L4-06PrevRef]* to enable this parameter.

■ L4-07: SpAgree Det.Selection

No. (Hex.)	Name	Description	Default (Range)
L4-07 (0470)	SpAgree Det.Selection	V/f OLV OLV/PM AOLV/PM EZOLV Sets the condition that activates speed detection.	1 (1, 2)

1 : No Detect@BB

Detects the frequency while the drive is operating. When the drive turns off its output, it will not detect frequency.

2 : Always Detect

■ L4-08: Sp Agree Source Selection

No. (Hex.)	Name	Description	Default (Range)
L4-08 (047F)	Sp Agree Source Selection	V/f OLV OLV/PM AOLV/PM EZOLV Sets the drive to use the soft starter output frequency or the motor speed (estimation value) for speed detection.	1 (0, 1)

0 : SFS O/P (Reference)

1 : MotSpd (ActSpeed)

The setting for *L4-08* has an effect:

- When you set detection conditions for *oL3 [Overtorque 1]*, *oL3 [Overtorque Detection 1]*, *oL4 [Overtorque 2]*, and *oL4 [Overtorque Detection 2]*:
  - *L6-01 = 1 [Trq Det1 Select = Enabled]* and *L6-50 = 1 [Trq Det1 Type = At Underload]*
  - *L6-04 = 1 [Trq Det2 Select = Enabled]* and *L6-53 = 1 [Trq Det2 Type = At Underload]*
- When you use speed agreement with Q2dev.
- When the MFDI terminals set for *H1-xx = 65, 66 [Up2 Command, Dw2 Command]* activate.
- When you set *H2-xx [MFDO Function Select]* to these functions:

Setting Value	Function
F	SpeedAgree1
10	USpeedAgree1
11	SpeedAgree2
12	USpeedAgree2

Setting Value	Function
13	FreqDetect 1
14	FreqDetect 2
15	FreqDetect 3
16	FreqDetect 4

- When you use these functions for Modbus monitor data:

Register No.	Description	
002CH	Drive Status 2	
	bit2	Speed agreement 1: During agreement
	bit3	User-defined speed agreement 1: During agreement
	bit4	Frequency Detection 1 1: Output frequency ≤ L4-01
	bit5	Frequency Detection 2 1: Output frequency ≥ L4-01
004BH	U1-12 [Drive Status]	
	bit4	1: During speed agreement

- When you use these functions for monitor parameters:

No. (Hex.)	Name	Description
U1-12 (004B)	Drive Status	bit 4: During speed agreement

◆ L5: FAULT RESTART

The Auto Restart function tries to keep machines operating when the drive detects a transient fault.

The drive can do a self-diagnostic check and continue the operation after a fault. If the cause of the fault goes away, the drive does speed search and restarts. It will not stop and the drive will not record a fault history. Use *L5-02 [Fault@Reset Select]* to select the operation of fault relay signals during Auto Restart operation.

Sets if the drive will do Auto Restart and the number of times the drive will try to do Auto Restart in a set time. If the number of Auto Restart tries is more than the set value during the set time, drive output shuts off and operation stops. If this happens, remove the cause of the fault and manually restart the drive.

WARNING! *Sudden Movement Hazard. Do not use the fault restart function in hoist or lifting applications. Failure to obey can cause death or serious injury.*

The drive can do Auto Restart when these faults occur:

Note:

You can disable Auto Restart for faults if you must not restart the machine after the fault.

Table 12.52 List of Faults during which Auto Restart is Available

Fault	Name	Parameters to Disable Auto Restart
GF	Ground Fault	L5-08
LF	Output Phase Loss	-
oC	Overcurrent	-
oH1	Heatsink Overheat	L5-08
oL1	Motor Overload	L5-07
oL2	Drive Overload	L5-07
oL3	Overtorque Detection 1	L5-07
oL4	Overtorque Detection 2	L5-07

Fault	Name	Parameters to Disable Auto Restart
ov	Overvoltage	L5-08
PF	Input Phase Loss	-
rH	Braking Resistor Overheat	-
rr	Dynamic Braking Transistor Fault	-
STPo	Motor Step-Out Detected	-
Uv1	DC Bus Undervoltage *1	L5-08

*1 *Uv1* is the target for the auto restart process when *L2-01 = 1 [RideThru@PwrLoss = Enabled]*, and L2-50 = 0, 1, 2, 3 [RidThruMode@PwrLoss = Timer Controlled, While CPU Active, KEB Mode, KEB Stop Mode].

■ L5-01: Auto-Reset Attempts

No. (Hex.)	Name	Description	Default (Range)
L5-01 (049E)	Auto-Reset Attempts	V/f OLV OLV/PM AOLV/PM EZOLV Sets the number of times that the drive will try to restart.	0 (0 - 10 times)

The drive resets the number of Auto Restart attempts to 0 in these conditions:

- The drive operates correctly for 10 minutes after a fault restart.

- When you manually clear a fault after the drive triggers protective functions.
- When you re-energize the drive.

■ L5-02: Fault@Reset Select

No. (Hex.)	Name	Description	Default (Range)
L5-02 (049F)	Fault@Reset Select	V/f OLV OLV/PM AOLV/PM EZOLV Sets the function that sends signals to the MFDO terminal set for *Fault [H2-xx = 3]* while the drive is automatically restarting.	1 (1, 2)

1 : Disable Fault Output

2 : Enable Fault Output

■ L5-04: Interval Reset Time

No. (Hex.)	Name	Description	Default (Range)
L5-04 (046C)	Interval Reset Time	V/f OLV OLV/PM AOLV/PM EZOLV Sets the time interval between each Auto Restart attempt. This function is enabled when *L5-05 = 2 [Reset Method = Use L5-04 Time]*.	10.0 s (0.5 - 600.0 s)

■ L5-05: Reset Method

No. (Hex.)	Name	Description	Default (Range)
L5-05 (0467)	Reset Method	V/f OLV OLV/PM AOLV/PM EZOLV Sets the count method for the Auto Restart operation.	1 (1, 2)

1 : Continuous

Counts the number of successful fault resets through Auto Restart.

When this value > *L5-01*, the drive will send a fault signal and fault code to the keypad and the motor will coast to stop.

2 : Use L5-04 Time

Counts the number of all fault resets (successful and unsuccessful) through Auto Restart. The drive repeats the Auto Restart process in the intervals set in *L5-04 [Interval Reset Time]*.

When this value > *L5-01*, the drive will send a fault signal and fault code to the keypad and the motor will coast to stop.

■ L5-07: OL1-4 Auto-Reset Select

No. (Hex.)	Name	Description	Default (Range)
L5-07 (0B2A)	OL1-4 Auto-Reset Select	V/f OLV OLV/PM AOLV/PM EZOLV Use these 4 digits to set the Auto Restart function for *oL1* to *oL4*. From left to right, the digits set *oL1*, *oL2*, *oL3*, and *oL4*, in order.	1111 (0000 - 1111)

0000 : Disabled

0001 : Enabled (—/—/—/oL4)

0010 : Enabled (—/—/oL3/—)

0011 : Enabled (—/—/oL3/oL4)

0100 : Enabled (—/oL2/—/—)

0101 : Enabled (—/oL2/—/oL4)

0110 : Enabled (—/oL2/oL3/—)

0111 : Enabled (—/oL2/oL3/oL4)

1000 : Enabled (oL1/—/—/—)

1001 : Enabled (oL1/—/—/oL4)

1010 : Enabled (oL1/—/oL3/—)

1011 : Enabled (oL1/—/oL3/oL4)

1100 : Enabled (oL1/oL2/—/—)

1101 : Enabled (oL1/oL2/—/oL4)

1110 : Enabled (oL1/oL2/oL3/—)
1111 : Enabled (oL1/oL2/oL3/oL4)

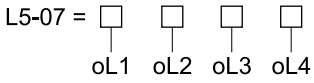

Figure 12.123 Setting Digits and Fault Code

■ L5-08: U/OV,OH,GF A-Reset Select

No. (Hex.)	Name	Description	Default (Range)
L5-08 (0B2B)	U/OV,OH,GF A-Reset Select	V/f OLV OLV/PM AOLV/PM EZOLV Use these 4 digits to set the Auto Restart function for *Uv1*, *ov*, *oH1*, and *GF*. From left to right, the digits set *Uv1*, *ov*, *oH1*, and *GF*, in order.	1111 (0000 - 1111)

0000 : Disabled
0001 : Enabled (—/–/—/GF)
0010 : Enabled (—/–/oH1/–)
0011 : Enabled (—/–/oH1/GF)
0100 : Enabled (—/ov/—/–)
0101 : Enabled (—/ov/—/GF)
0110 : Enabled (—/ov/oH1/–)
0111 : Enabled (—/ov/oH1/GF)
1000 : Enabled (Uv1/–/—/–)
1001 : Enabled (Uv1/–/—/GF)
1010 : Enabled (Uv1/–/oH1/–)
1011 : Enabled (Uv1/–/oH1/GF)
1100 : Enabled (Uv1/ov/—/–)
1101 : Enabled (Uv1/ov/—/GF)
1110 : Enabled (Uv1/ov/oH1/–)
1111 : Enabled (Uv1/ov/oH1/GF)

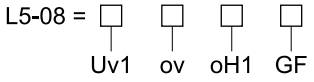

Figure 12.124 Setting Digits and Fault Code

◆ L6: TORQUE DETECTION

The overtorque/undertorque detection function prevents damage to machinery and loads.

Overtorque is the when there is too much load on the machine. If the motor current or output torque is at the overtorque detection level for the overtorque detection time, the drive will output an alarm and turn off the output.

Undertorque is the when a load suddenly decreases. When the motor current or output torque is at the undertorque detection level for the undertorque detection time, the drive will outupt an alarm and turn off the output.

You can use the undertorque detection function to detect these conditions, for example:

- Machine belt cuts
- Unusual operation of the electromagnetic contactor on the drive output side
- Clogged output side air filters in fans and blowers
- Damage to blade tips and broken string

Note:
If there is *oC [Overcurrent]* or *oL1 [Motor Overload]*, the drive can stop during overtorque conditions. Use torque detection to identify overload conditions before the drive detects *oC* or *oL1* and stops. Use this function to detect issues that occur in the application.

■ Parameter Settings

You can individually set the two overtorque/undertorque detection functions with the drive. Use the information in Table 12.53 to set the parameters.

Table 12.53 Overtorque/Undertorque Detection Parameters

Configuration Parameter	Overtorque/Undertorque Detection 1	Overtorque/Undertorque Detection 2
MFDO Function Select • Terminal NO-CM • Terminal DO1-O1C • Terminal DO2-O2C	H2-01, H2-02, and H2-03 = 32 N.O.: Activated when detected	H2-01, H2-02, and H2-03 = 37 N.O.: Activated when detected
	H2-01, H2-02, and H2-03 = 33 N.C.: Disactivated when detected	H2-01, H2-02, and H2-03 = 38 N.C.: Disactivated when detected
Detection conditions and selection of operation after detection	L6-01	L6-04
Detection Level	L6-02	L6-05
	Analog Input Terminal *1 H3-xx = E	-
Detection Time	L6-03	L6-06

*1 You can also use an analog input terminal to supply the torque detection level. To enable this function, set *H3-xx = E [MFAI Function Select = OvUntrq Level]*. If both *L6-02* and *H3-xx = E* are set, the analog input has priority and the setting of *L6-02* is disabled.

You cannot use Overtorque/Undertorque Detection 2 to set the detection level for the analog input terminals.

Note:

In V/f Control, the drive uses the current level (100% of the drive rated output current) to detect overtorque/undertorque. In vector control, the drive uses the motor torque (100% of the motor rated torque)to detect overtorque/undertorque. When you enable the mechanical weakening detection function, the overtorque/undertorque detection level for all control modes is the current level (100% of the drive rated output current).

■ Time Chart for Detection of Overtorque/Undertorque

Overtorque Detection Time Chart

When you use Overtorque/Undertorque Detection 1, the drive detects overtorque if the motor current or motor torque is at the detection level set in *L6-02 [Trq Det1 Level]* for the time set in *L6-03 [Trq Det1 Time]*. Parameter *L6-01 [Trq Det1 Select]* sets the operation after detection.

When you use Overtorque/Undertorque Detection 2, set *L6-04 [Trq Det2 Select]*, *L6-05 [Trq Det2 Level]*, and *L6-06 [Trq Det2 Time]*.

Set the terminal that outputs the alarm in *H2-01 to H2-03 [MFDO Function Select]*.

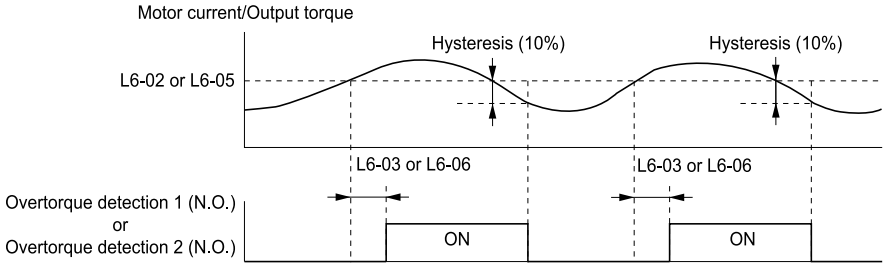

Figure 12.125 Overtorque Detection Time Chart

Note:

The drive applies a hysteresis of approximately 10% of the drive rated output current or the motor rated torque to the overtorque/undertorque detection function.

Undertorque Detection Time Chart

When you use Overtorque/Undertorque Detection 1, the drive detects undertorque if the motor current or motor torque is less than or equal to the detection level set in *L6-02* for the time set in *L6-03*. Parameter *L6-01* sets the operation after detection.

When you use Overtorque/Undertorque Detection 2, set the operation in *L6-04, L6-05, and L6-06*.

Set the terminal that outputs an alarm in *H2-01 to H2-03*.

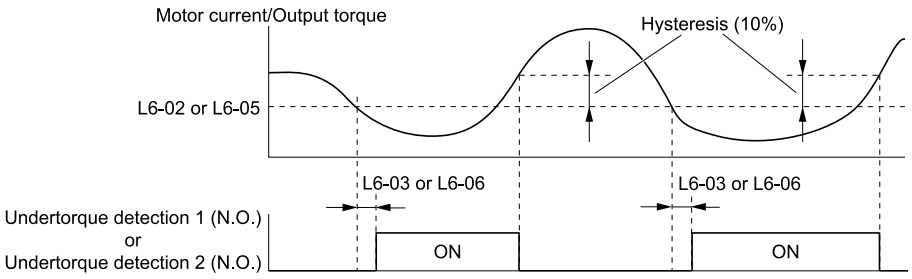

Figure 12.126 Undertorque Detection Time Chart

Note:
The drive applies a hysteresis of approximately 10% of the drive rated output current or the motor rated torque to the overtorque/undertorque detection function.

■ Mechanical Weakening Detection

The Mechanical Weakening Detection function detects the mechanical weakening of a machine that can cause overtorque or undertorque because of motor speed and total drive operation time.

The drive activates the function if the drive total operation time is longer than the time set in *L6-11 [MechFatigue Hold Off Time]*. You can use *U4-01 [Cumulative OpeTime]* to monitor the total operation time.

Parameter Settings

If overtorque or undertorque occur during the speed range set in *L6-08 [MechF Enable]* and *L6-09 [MechFatigue Speed Detect Level]* for the length of time set in *L6-10 [MechFatigue Delay Time]*, the drive will detect Mechanical Weakening. The drive uses *L6-01 to L6-03* to detect *oL5 [Mechanical Weakening Detection 1]* or *UL5 [Mechanical Weakening Detection 2]*. Parameter *L6-08* sets the operation after detection.

Set the terminal that outputs the fault in *H2-01 to H2-03 [MFDO Function Select]*.

Table 12.54 Mechanical Weakening Detection Settings Parameters

Configuration Parameter		Mechanical Deterioration Detection
MFDO Function Select • Terminal NO-CM • Terminal DO1-O1C • Terminal DO2-O2C		H2-01, H2-02, and H2-03 = 66
Operation Selection after Detection		L6-08
Detection Start Time		L6-11
Speed Range	Detection Criteria	L6-08
	Detection Level	L6-09
	Detection Time	L6-10
Overtorque	Detection Criteria	L6-01
	Detection Level	L6-02
	Detection Time	L6-03

■ L6-01: Trq Det1 Select

No. (Hex.)	Name	Description	Default (Range)
L6-01 (04A1)	Trq Det1 Select	V/f OLV OLV/PM AOLV/PM EZOLV Enables overtorque and undertorque detection and the operation of drives (operation status) after detection.	0 (0, 1)

The drive detects overtorque if the motor current or output torque is more than the level set in *L6-02 [Trq Det1 Level]* for the length of time set in *L6-03 [Trq Det1 Time]*. The drive detects undertorque if the motor current or output torque is less than the level set in *L6-02* for the length the time set in *L6-03*.

0 : Disabled

The drive will not detect overtorque or undertorque.

1 : Enabled

The behavior is adjusted using parameters *L6-50 [Trq Det1 Type]*, *L6-51 [Trq Det1 Action]*, and *L6-52 [Trq Det1 Condition]*.

■ L6-02: Trq Det1 Level

No. (Hex.)	Name	Description	Default (Range)
L6-02 (04A2)	Trq Det1 Level	V/f OLV OLV/PM AOLV/PM EZOLV Sets the detection level for Overtorque/Undertorque Detection 1. In V/f control, drive rated output current = 100% value. In vector control, motor rated torque = 100% value.	150% (0 - 300%)

Note:
- Set the torque detection level as a percentage of the drive rated output current in all control methods to set the mechanical weakening detection level.
- You can also use an analog input terminal to supply the torque detection level. To enable this function, set *H3-xx = E [MFAI Function Select = OvUntrq Level]*. If you set *L6-02* and *H3-xx = E*, the analog input is most important and the drive disables *L6-02*.

■ L6-03: Trq Det1 Time

No. (Hex.)	Name	Description	Default (Range)
L6-03 (04A3)	Trq Det1 Time	V/f OLV OLV/PM AOLV/PM EZOLV Sets the detection time for Overtorque/Undertorque Detection 1.	0.1 s (0.0 - 10.0 s)

■ L6-04: Trq Det2 Select

No. (Hex.)	Name	Description	Default (Range)
L6-04 (04A4)	Trq Det2 Select	V/f OLV OLV/PM AOLV/PM EZOLV Enables overtorque and undertorque detection and the operation of drives (operation status) after detection.	0 (0, 1)

The drive detects overtorque if the motor current or output torque is more than the level set in *L6-05 [Trq Det2 Level]* for the length of time set in *L6-06 [Trq Det2 Time]*. The drive detects undertorque if the motor current or output torque is less than the level set in *L6-05* for the length the time set in *L6-06*. Adjust the conditions using parameters *L6-53, L6-54, and L6-55 [Trq Det2 Type, Trq Det2 Action, and Trq Det2 Condition]*.

0 : Disabled

1 : Enabled

■ L6-05: Trq Det2 Level

No. (Hex.)	Name	Description	Default (Range)
L6-05 (04A5)	Trq Det2 Level	V/f OLV OLV/PM AOLV/PM EZOLV Sets the detection level for Overtorque/Undertorque Detection 2. In V/f control, drive rated output current = 100% value. In vector control, motor rated torque = 100% value.	150% (0 - 300%)

Note:

Overtorque/Undertorque Detection 2 cannot set the detection level for the analog input terminal.

■ L6-06: Trq Det2 Time

No. (Hex.)	Name	Description	Default (Range)
L6-06 (04A6)	Trq Det2 Time	V/f OLV OLV/PM AOLV/PM EZOLV Sets the detection time for Overtorque/Undertorque Detection 2.	0.1 s (0.0 - 10.0 s)

■ L6-07: Trq Detect Filter Time

No. (Hex.)	Name	Description	Default (Range)
L6-07 (04E5)	Trq Detect Filter Time	V/f OLV OLV/PM AOLV/PM EZOLV Sets the time constant for a primary filter to the torque reference or to the output current used to detect overtorque/undertorque.	0 ms (0 - 1000 ms)

■ L6-08: MechF Enable

No. (Hex.)	Name	Description	Default (Range)
L6-08 (0468)	MechF Enable	V/f OLV OLV/PM AOLV/PM EZOLV Enables mechanical deterioration detection and how the drive operates (operation status) after detection.	0 (0, 1)

The drive detects mechanical weakening through overtorque or undertorque as specified by the conditions set in *L6-08 to L6-11 [MechFatigue Hold Off Time], and L6-56 to L6-58 [MechF Action to MechF Method]*. Set overtorque/undertorque detection conditions in *L6-01 to L6-03 [Trq Det1 Select to Trq Det1 Time]*. The drive disables the operation selection set in *L6-01 [Trq Det1 Select]*.

0 : Disabled

The drive does not detect mechanical weakening.

1 : Enabled

The drive detects mechanical weakening. Use parameters *L6-56 [MechF Action]*, *L6-57 [MechF AbsSpeed]*, and *L6-58 [MechF Method]* to adjust the conditions.

■ L6-09: MechFatigue Speed Detect Level

No. (Hex.)	Name	Description	Default (Range)
L6-09 (0469)	MechFatigue Speed Detect Level	V/f OLV **OLV/PM** AOLV/PM EZOLV Sets the speed level where the drive will operate the mechanical deterioration detection function, as a percentage of the Maximum Output Frequency.	110.0% (-110.0 - 110.0%)

Parameters *L6-01 to L6-03 [Trq Det1 Select to Trq Det1 Time]* set the overtorque/undertorque detection conditions.

When *L6-08 = 2, 4, 6, 8 [MechF Enable = Speed : unsigned]*, the setting value of *L6-09* is the absolute value. When *L6-09* is set to a negative number, the drive processes this value as a positive number.

■ L6-10: MechFatigue Delay Time

No. (Hex.)	Name	Description	Default (Range)
L6-10 (046A)	MechFatigue Delay Time	V/f OLV **OLV/PM** AOLV/PM EZOLV Sets the time for mechanical deterioration detection.	0.1 s (0.0 - 10.0 s)

When the detection conditions set in *L6-08 [MechF Enable]* continue for the time set in *L6-10*, the drive will detect mechanical weakening.

■ L6-11: MechFatigue Hold Off Time

No. (Hex.)	Name	Description	Default (Range)
L6-11 (046B)	MechFatigue Hold Off Time	V/f OLV **OLV/PM** AOLV/PM EZOLV Sets the time that the drive will start mechanical deterioration detection triggered by the cumulative operation time of the drive.	0 h (0 - 65535 h)

When the total operation time of the drive is more than the value set in *L6-11*, the drive will detect mechanical weakening. Use *U4-01 [Cumulative OpeTime]* to monitor the drive total operation time.

■ L6-50: Trq Det1 Type

No. (Hex.)	Name	Description	Default (Range)
L6-50 (04CC)	Trq Det1 Type	V/f OLV **OLV/PM** AOLV/PM EZOLV Sets the speed range that detects overtorque and undertorque.	0 (0, 1)

■ L6-51: Trq Det1 Action

No. (Hex.)	Name	Description	Default (Range)
L6-51 (04CD)	Trq Det1 Action	V/f OLV **OLV/PM** AOLV/PM EZOLV Sets operation of drives (operation status) after detection.	0 (0, 1)

■ L6-52: Trq Det1 Condition

No. (Hex.)	Name	Description	Default (Range)
L6-52 (04CE)	Trq Det1 Condition	V/f OLV **OLV/PM** AOLV/PM EZOLV Sets operation of drives (operation status) after detection.	0 (0, 1)

■ L6-53: Trq Det2 Type

No. (Hex.)	Name	Description	Default (Range)
L6-53 (04CF)	Trq Det2 Type	V/f OLV OLV/PM AOLV/PM EZOLV Sets the speed range that detects overtorque and undertorque.	0 (0, 1)

■ L6-54: Trq Det2 Action

No. (Hex.)	Name	Description	Default (Range)
L6-54 (04D0)	Trq Det2 Action	V/f OLV OLV/PM AOLV/PM EZOLV Sets operation of drives (operation status) after detection.	0 (0, 1)

■ L6-55: Trq Det2 Condition

No. (Hex.)	Name	Description	Default (Range)
L6-55 (04D1)	Trq Det2 Condition	V/f OLV OLV/PM AOLV/PM EZOLV Sets operation of drives (operation status) after detection.	0 (0, 1)

■ L6-56: MechF Action

No. (Hex.)	Name	Description	Default (Range)
L6-56 (04D2)	MechF Action	V/f OLV OLV/PM AOLV/PM EZOLV Sets the speed where the drive detects mechanical deterioration and how the drive operates (operation status) after detection. Only available when *L6-08 = 1 [MechF Enable = Enabled]*.	0 (0, 1)

■ L6-57: MechF AbsSpeed

No. (Hex.)	Name	Description	Default (Range)
L6-57 (04D3)	MechF AbsSpeed	V/f OLV OLV/PM AOLV/PM EZOLV Sets the speed where the drive detects mechanical deterioration and how the drive operates (operation status) after detection. Only available when *L6-08 = 1 [MechF Enable = Enabled]*.	0 (0, 1)

■ L6-58: MechF Method

No. (Hex.)	Name	Description	Default (Range)
L6-58 (04D4)	MechF Method	V/f OLV OLV/PM AOLV/PM EZOLV Sets the speed where the drive detects mechanical deterioration and how the drive operates (operation status) after detection. Only available when *L6-08 = 1 [MechF Enable = Enabled]*. Use parameter L6-57 [MechF AbsSpeed] to either use absolute speed or signed speed value.	0 (0, 1)

◆ L7: TORQUE LIMIT

The torque limit function limits the internal torque reference for the drive to and keeps the torque from the motor constant.

This function limits the torque applied to loads and regenerative torque to a value less than a set quantity. This function also prevents damage to machinery and increases the reliability of continuous operation. You can set torque limits individually for the four quadrants, which include torque direction (motoring/regeneration) and direction of motor rotation (forward/reverse). When the torque reference value is at the set torque limit, the MFDO terminal set for *During Torque Limit [H2-xx = 30]* activates.

Note:
- The drive output current limits maximum output torque. The drive limits torque to 150% of the rated output current for Heavy Duty Rating (HD) and to 110% of the rated output current for Normal Duty Rating (ND). The actual output torque is not more than the limits of the drive rated output current when you set the torque limit to a high value.
- When you use torque limits for lifting applications, do not lower the torque limit value too much. When the torque limit function is triggered, falls and rollbacks can occur because of sudden acceleration stops and stalls of the motor.

■ Configuring Settings

Use one of these methods to set torque limits:

- Individually set the four torque limit quadrants using *L7-01 to L7-04 [FW Torque Limit to RV Reg. TrqLimit]*.

- Use MFAI to individually set the four torque limit quadrants. Set *H3-02, H3-10 = 9, B, C [MFAI Function Select = FW Trq Lim, Rev Trq Lim, RegenTrqLim]*.
- Use MFAI to set all four torque limit quadrants together. Set *H3-02, H3-10 = D [GenerTrqLim]*.
- Use a communication option to set all four torque limit quadrants together.

This figure shows the configuration method for each quadrant.

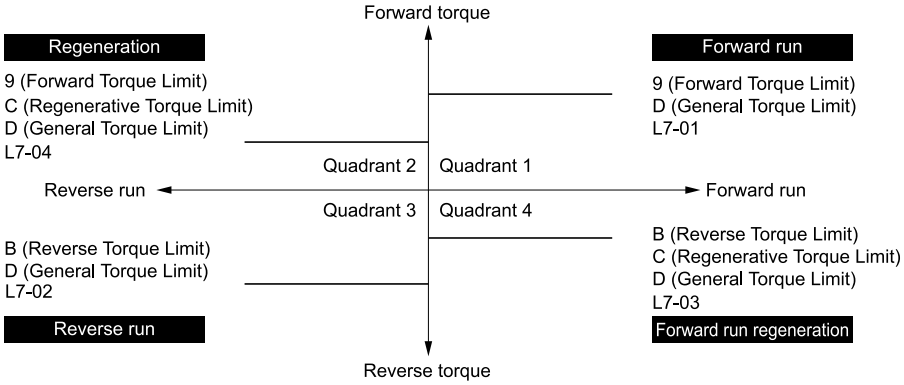

Figure 12.127 Torque Limits and Analog Input Setting Parameters

Note:

- When *L7-01 to L7-04* and analog inputs or communication option torque limits set torque limits for the same quadrant, the drive enables the lowest value.
  In this example of parameter settings, the torque limit for quadrant 1 is 130% and the torque limit for quadrants 2, 3, and 4 is 150%.
  Settings: *L7-01 = 130%*, *L7-02 to L7-04 = 200%*, and MFAI torque limit = 150%
- The drive output current limits maximum output torque. The torque limit is 150% of the rated output current for HD and to 120% of the rated output current for ND. The actual output torque is not more than the limits of the drive rated output current when you set the torque limit to a high value.

■ L7-01: FW Torque Limit

No. (Hex.)	Name	Description	Default (Range)
L7-01 (04A7) RUN	FW Torque Limit	V/f OLV OLV/PM AOLV/PM EZOLV Sets the torque limit value for forward motoring as a percentage, where motor rated torque is the 100% value.	200% (0 - 300%)

Note:

- The lower torque limit is enabled when you set the torque limit by the following method.
  – Set *H3-02 or H3-10 = 9, D [MFAI Function Select = FW Trq Lim, GenerTrqLim]*.
  – Use a communication option to set the torque limits
- You must think about drive capacity when a large quantity of torque is necessary. If you set the value too high, the drive can detect *oC [Overcurrent]*.
- If you set the value too low with large loads, the motor can stall.

■ L7-02: RV Torque Limit

No. (Hex.)	Name	Description	Default (Range)
L7-02 (04A8) RUN	RV Torque Limit	V/f OLV OLV/PM AOLV/PM EZOLV Sets the torque limit value for reversed motoring as a percentage, where motor rated torque is the 100% value.	200% (0 - 300%)

Note:

- The lower torque limit is enabled when you set the torque limit by the following method.
  – Set *H3-02 or H3-10 = 9, D [MFAI Function Select = FW Trq Lim, GenerTrqLim]*.
  – Use a communication option to set the torque limits
- You must think about drive capacity when a large quantity of torque is necessary. If you set the value too high, the drive can detect *oC [Overcurrent]*.
- If you set the value too low with large loads, the motor can stall.

■ L7-03: FW Reg. TrqLimit

No. (Hex.)	Name	Description	Default (Range)
L7-03 (04A9) RUN	FW Reg. TrqLimit	V/f OLV OLV/PM AOLV/PM EZOLV Sets the torque limit value for forward regenerative conditions as a percentage of the motor rated torque.	200% (0 - 300%)

Note:
- The lower torque limit is enabled when you set the torque limit by the following method.
  – Set *H3-02 or H3-10 = 9, D [MFAI Function Select = FW Trq Lim, GenerTrqLim]*.
  – Use a communication option to set the torque limits
- You must think about drive capacity when a large quantity of torque is necessary. If you set the value too high, the drive can detect *oC [Overcurrent]*.
- If you set the value too low with large loads, the motor can stall.

■ L7-04: RV Reg. TrqLimit

No. (Hex.)	Name	Description	Default (Range)
L7-04 (04AA) RUN	RV Reg. TrqLimit	V/f OLV OLV/PM AOLV/PM EZOLV Sets the torque limit value for reversed regenerative conditions as a percentage of the motor rated torque.	200% (0 - 300%)

Note:
- Use this method to set the torque limit and enable the lower torque limit:
  – Set *H3-02 or H3-10 = 9, D [MFAI Function Select = FW Trq Lim, GenerTrqLim]*.
  – Use a communication option to set the torque limits
- You must think about drive capacity when a large quantity of torque is necessary. If you set the value too high, the drive can detect *oC [Overcurrent]*.
- If you set the value too low with large loads, the motor can stall.

■ L7-06: TrqLimit Integral Time

No. (Hex.)	Name	Description	Default (Range)
L7-06 (04AC)	TrqLimit Integral Time	V/f OLV OLV/PM AOLV/PM EZOLV Sets the integral time constant for the torque limit function.	200 ms (5 - 10000 ms)

Decrease the setting value to increase torque limit responsiveness when you use torque limits and *L7-07 = 2 [TrqLimit@Acc/Decel = I-ctrl@Ac/Dec]*.

If there is hunting when torque limits are active, increase the setting value.

■ L7-07: TrqLimit@Acc/Decel

No. (Hex.)	Name	Description	Default (Range)
L7-07 (04C9)	TrqLimit@Acc/Decel	V/f OLV OLV/PM AOLV/PM EZOLV Sets the torque limit function during acceleration and deceleration.	1 (1, 2)

1 : P-ctrl@Ac/Dec

The torque limit function works with proportional control during acceleration and deceleration, and switches to integral control at constant speed. Use this setting when quickly reaching the target speed is more important than the torque limit during speed changes.

2 : I-ctrl@Ac/Dec

The torque limit function always uses integral control. Use this setting when a very accurate torque limit is necessary during speed changes, for example in winding machine applications.

If you make the torque limit the most important, it can:

- Increase the acceleration and deceleration times.
- Not let the motor speed reach the frequency reference value during run at constant speed.

■ L7-16: TrqLimit@Start

No. (Hex.)	Name	Description	Default (Range)
L7-16 (044D)	TrqLimit@Start	V/f OLV OLV/PM AOLV/PM EZOLV Assigns a time filter to allow the torque limit to build at start.	1 (0, 1)

0 : Disabled

There is torque limit at start without a delay time.

Use this setting to maximize the response time when sudden acceleration or deceleration at start is necessary.

1 : Enabled

There is a delay time of 64 ms at start to build the torque limit.

◆ L8: DRIVE PROTECTION

L8 parameters set protective functions that prevent faults such as overheating, phase loss, and ground faults.

■ L8-01: 3%ERF DBR Protection

No. (Hex.)	Name	Description	Default (Range)
L8-01 (04AD)	3%ERF DBR Protection	V/f OLV OLV/PM AOLV/PM EZOLV Sets the function to enable braking resistor protection with a Yaskawa ERF series braking resistor (3% ED) installed on the heatsink.	0 (0, 1)

0 : Disabled

Disables braking resistor protection. Use this setting for dynamic braking options that are not Yaskawa ERF series braking resistors.

1 : Enabled

Enables protection for Yaskawa ERF series braking resistors.

Note:

Set *L8-01 = 1* and *H2-01 to H2-03 = 4C [MFDO Function Select = BrkRes Fault]*. Use a sequence to turn OFF power with MFDO.

■ L8-02: Overheat Alm Level

No. (Hex.)	Name	Description	Default (Range)
L8-02 (04AE)	Overheat Alm Level	V/f OLV OLV/PM AOLV/PM EZOLV Sets the *oH* detection level in temperature.	Determined by o2-04, C6-01 (50 - 150 °C)

If the heatsink temperature is more than the temperature set in this parameter, the drive detects an overheat pre-alarm. To enable this function, set one of *H2-01 to H2-03 [MFDO Function Select]* to *4E [Drive PreOH]*.

If the temperature increases to the overheat fault level, the drive will trigger an *oH1 [Heatsink Overheat]* fault and stop operation.

■ L8-03: Overheat Pre-Alarm Selection

No. (Hex.)	Name	Description	Default (Range)
L8-03 (04AF)	Overheat Pre-Alarm Selection	V/f OLV OLV/PM AOLV/PM EZOLV Sets the operation of drives when an *oH* alarm is detected.	3 (0 - 4)

0 : Ramp->Stop

The drive ramps the motor to stop in the deceleration time. The output terminal set for *Fault [H2-01 to H2-03 = 3]* activates.

1 : Coast->Stop

The output turns off and the motor coasts to stop. The output terminal set for *Fault [H2-01 to H2-03 = 3]* activates.

2 : Fast Stop (C1-09)

The drive stops the motor in the deceleration time set in *C1-09 [Fast Stop Time]*. The output terminal set for *Fault [H2-01 to H2-03 = 3]* activates.

3 : Alarm Only

The keypad shows *oH* and the drive continues operation. The output terminal set for *Alarm [H2-01 to H2-03 = 4]* activates.

4 : Run@L8-19 Rate

The drive decelerates to the level set in *L8-19 [Frq Reduct@oHPre-Alarm]* and continues operation. *oH* flashes on the keypad.

oH flashes on the keypad. When the alarm is output, the drive decelerates each 10 seconds. If the drive decelerates 10 times and the alarm continues to be output, the output terminal set for *oH Pre-Alarm Reduction Limit [H2-01 to H2-03 = 4F]* activates. When the alarm is not output during deceleration, the drive accelerates until it is at the frequency reference that was applicable before the alarm was turned off. This figure shows the output of the alarm and the drive operation at a decreased output frequency.

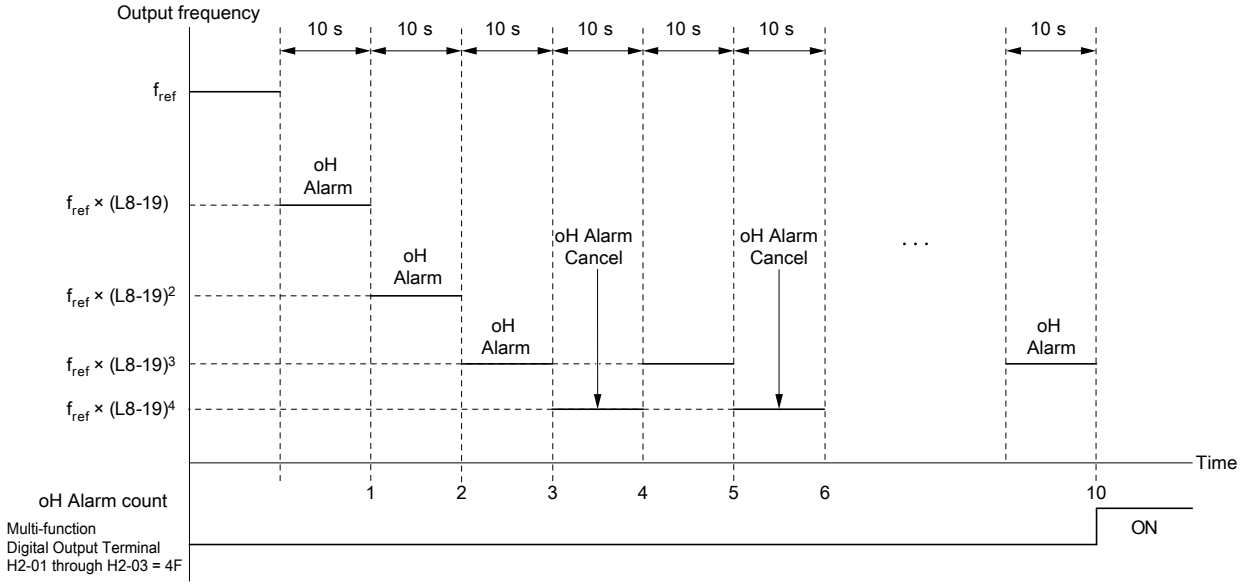

Figure 12.128 Drive Operation at a Decreased Output Frequency when the Overheat Alarm is Output

■ L8-05: In PhaseLoss Selection

No. (Hex.)	Name	Description	Default (Range)
L8-05 (04B1)	In PhaseLoss Selection	V/f OLV OLV/PM AOLV/PM EZOLV Sets the function to enable and disable input phase loss detection.	1 (0, 1)

0 : Disabled

1 : Enabled

The drive measures ripples in DC bus voltage to detect input phase loss.

The drive detects phase loss when power supply phase loss occurs or the main circuit capacitor becomes unusable, which causes *PF [Input Phase Loss]* to show on the keypad.

Disable the detection of the input power supply phase loss function in these conditions:

- During deceleration
- The run command is not input
- The output current is less than 30% of the drive rated current.

■ L8-07: Out PhaseLoss Selection

No. (Hex.)	Name	Description	Default (Range)
L8-07 (04B3)	Out PhaseLoss Selection	V/f OLV OLV/PM AOLV/PM EZOLV Sets the function to enable and disable output phase loss detection. The drive starts output phase loss detection when the output current decreases to less than 5% of the drive rated current.	0 (0 - 2)

Note:

The drive can incorrectly start output phase loss detection in these conditions:
- The motor rated current is very small compared to the drive rating.
- The drive is operating a PM motor with a small load.

0 : Disabled

1 : 1PH Loss Det

If the drive loses one output phase, it will trigger *LF [Output Phase Loss]*.

The output turns off and the motor coasts to stop.

2 : 2/3PH Loss Det

If the drive loses more than one output phase, it will trigger *LF [Output Phase Loss]*.

The output turns off and the motor coasts to stop.

■ L8-09: Ground Fault Selection

No. (Hex.)	Name	Description	Default (Range)
L8-09 (04B5)	Ground Fault Selection	V/f OLV **OLV/PM** AOLV/PM EZOLV Sets the function to enable and disable ground fault protection.	Determined by o2-04 (0, 1)

0 : Disabled

The drive will not detect ground faults.

1 : Enabled

If there is high leakage current or a ground short circuit in one or two output phases, the drive will detect *GF [Ground Fault]*.

Note:

If the ground path impedance is low, *oC [Overcurrent]*, *SC [Out Short Circuit or IGBT Fault]*, or *ov [DC Bus Overvoltage]* can stop the motor.

■ L8-10: Fan Operate Selection

No. (Hex.)	Name	Description	Default (Range)
L8-10 (04B6)	Fan Operate Selection	V/f OLV **OLV/PM** AOLV/PM EZOLV Sets operation of the heatsink cooling fan.	1 (1 - 3)

1 : Dur Run (OffDly)

The drive turns on the fan when a Run command is active.

2 : Always On

The fan turns on when you supply power to the drive. When you release the Run command and the delay time set in *L8-11 [Fan Off-Delay Time]* is expired, the fan stops. his setting extends the fan lifetime.

3 : Fan ON @Heating of Drive

The fan turns on when the drive detects that the main circuit is overheating.

■ L8-11: Fan Off-Delay Time

No. (Hex.)	Name	Description	Default (Range)
L8-11 (04B7)	Fan Off-Delay Time	V/f OLV **OLV/PM** AOLV/PM EZOLV Sets the length of time that the drive will wait before it stops the cooling fan after it cancels the Run command when *L8-10 = 1 [Fan Operate Selection = Dur Run (OffDly)]*.	60 s (0 - 300 s)

■ L8-12: Ambient Temperature Setting

No. (Hex.)	Name	Description	Default (Range)
L8-12 (04B8)	Ambient Temperature Setting	V/f OLV **OLV/PM** AOLV/PM EZOLV Sets the ambient temperature of the drive installation area.	40 °C (-10 °C - +60 °C)

Note:

The setting range changes when the *L8-35 [Installation Selection]* value changes:

- *0 [IP00/IP20/Open-Chassis]*: -10 °C to +60 °C
- *1 [Side-by-Side Mounting]*: -10 °C to +50 °C
- *2 [UL Type 1]*: -10 °C to +50 °C
- *3 [Ext. Heatsink]*: -10 °C to +50 °C

The drive automatically adjusts the drive rated current to the best value as specified by the set temperature. Set the ambient temperature of the area where you install the drive to a value that is more than the drive rating.

Refer to *Derating Depending on Ambient Temperature on page 303* for information about derating as specified by ambient temperature.

■ L8-15: oL2@LoSpeed Selection

No. (Hex.)	Name	Description	Default (Range)
L8-15 (04BB)	oL2@LoSpeed Selection	V/f OLV **OLV/PM** AOLV/PM EZOLV Sets the function to decrease drive overload at low speeds to prevent damage to the main circuit transistor during low speed operation (at 6 Hz or slower) to prevent *oL2 [Drive Overloaded]*.	1 (0, 1)

Note:

Contact the manufacturer or your nearest sales representative before disabling this function at low speeds. If you frequently operate drives with high output current in low speed ranges, it can cause heat stress and decrease the life span of drive IGBTs.

0 : Disabled

The drive does not decrease the overload protection level.

1 : Enabled

When the drive detects *oL2* during low speed operation, it automatically decreases the overload detection level.

At zero speed, the drive derates the overload by 50%.

■ L8-18: Soft CurrLim Selection

No. (Hex.)	Name	Description	Default (Range)
L8-18 (04BE)	Soft CurrLim Selection	**V/f** **OLV** OLV/PM AOLV/PM EZOLV Set the software current limit selection function to prevent damage to the main circuit transistor caused by too much current.	1 (0, 1)

0 : Disabled

When the output current is at the software current limit value, the drive does not restrict the output voltage.

Note:

The drive may detect an *oC [Overcurrent]* when loads are particularly heavy or the acceleration time is particularly short.

1 : Enabled

When the output current is at the software current limit value, the drive decreases output voltage to decrease output current.

When the output current decreases to the software current limit level, the drive starts usual operation.

■ L8-19: Frq Reduct@oHPre-Alarm

No. (Hex.)	Name	Description	Default (Range)
L8-19 (04BF)	Frq Reduct@oHPre-Alarm	**V/f** **OLV** **OLV/PM** **AOLV/PM** **EZOLV** Sets the ratio at which the drive derates the frequency reference during an *oH* alarm.	0.8 (0.1 - 0.9)

When these two conditions are correct, this function is enabled:

- *L8-03 = 4 [Overheat Pre-Alarm Selection = Run@L8-19 Rate]*
- *oH* alarm is output

■ L8-27: OverCurr Det Gain

No. (Hex.)	Name	Description	Default (Range)
L8-27 (04DD)	OverCurr Det Gain	V/f OLV **OLV/PM** **AOLV/PM** **EZOLV** Sets the PM motor overcurrent detection level as a percentage of the motor rated current value.	300.0% (0.0 - 1000.0%)

Note:

- If the setting value for *L8-27* is the same or almost the same as the setting value for *L7-xx [Torque Limit]*, the drive can detect *oC2 [Overcurrent2]*.
- This function is disabled when you set *L8-27 = 0.0*. Under usual circumstances, do not set *L8-27 = 0.0*.
- If the drive rated current is much higher than the motor rated current, PM motor magnets can demagnetize when current flows at the drive overcurrent detection level. When you set a low overcurrent detection level to prevent PM motor demagnetization, make sure that you adjust *L8-27*.

■ L8-29: LF2 Unbalance Selection

No. (Hex.)	Name	Description	Default (Range)
L8-29 (04DF)	LF2 Unbalance Selection	V/f OLV **OLV/PM** AOLV/PM **EZOLV** Sets the function to detect *LF2*.	1 (0, 1)

This function prevents damage to PM motors. Current unbalance can heat a PM motor and demagnetize the magnets. When the current is unbalanced, the drive will detect *LF2* to stop the motor and prevent damage to the motor.

0 : Disabled

1 : Enabled

■ L8-31: LF2 Detect Time

No. (Hex.)	Name	Description	Default (Range)
L8-31 (04E1)	LF2 Detect Time	V/f OLV **OLV/PM** AOLV/PM **EZOLV** Sets the LF2 [Output Current Imbalance] detection time.	3 (1 – 100)

When the output current is unbalanced for longer than the time set in *L8-31*, the drive detects *LF2*.

Note:
- Set *L8-29 = 1 [LF2 Unbalance Selection = Enabled]* to enable *L8-31*.
- If the drive incorrectly detects *LF2*, increase *L8-31* in 5-unit increments.
- The keypad shows *L8-31* when *E9-01 = 1 [Motor Type Selection = PM]* in EZ Vector Control.

■ L8-35: Installation Selection

No. (Hex.)	Name	Description	Default (Range)
L8-35 (04EC)	Installation Selection	**V/f** **OLV** **OLV/PM** AOLV/PM **EZOLV** Sets the type of drive installation.	0 (0 - 3)

Note:
- Parameter *A1-03 [Init Parameters]* does not initialize this parameter.
- This parameter is set to the correct value when the drive is shipped. Side-by-Side installation
  – Change the value only in these conditions:
  – When you install a UL Type 1 kit on an IP20/UL Open Type drive to convert the drive to an IP20/UL Type 1 drive.
  – Mounting a standard drive with the heatsink outside the enclosure panel.

The overload protection detection level for the drive is automatically adjusted to the optimal value in accordance with the setting value. Refer to *Derating Depending on Ambient Temperature on page 303* for information about derating as specified by ambient temperature.

0 : IP00/IP20/Open-Chassis

Use this setting to install IP20/UL Open Type drives.

Make sure that there is 30 mm (1.18 in) minimum of space between drives or between the drive and side of the enclosure panel.

1 : Side-by-Side Mounting

Use this setting to install more than one drive side-by-side.

2 : UL Type 1

Use this setting to install IP20/UL Type 1 or IP55 drives.

3 : Ext. Heatsink

Use this setting when the heatsink (cooling fin) is outside the control panel.

■ L8-40: Carrier Red Off-Delay Time

No. (Hex.)	Name	Description	Default (Range)
L8-40 (04F1)	Carrier Red Off-Delay Time	**V/f** **OLV** **OLV/PM** AOLV/PM **EZOLV** Sets the length of time until the automatically reduced carrier frequency returns to the condition before the reduction.	Determined by A1-02 (0.00 - 2.00 s)

Set *L8-40 ≠ 0.00* to enable the carrier frequency reduction function during start-up. When operation starts, the drive automatically decreases the carrier frequency. When the time set in *L8-40* is expired, the carrier frequency returns to the value set in *C6-02 [Carrier Frequency Selection]*.

■ L8-41: HCA alarm Selection

No. (Hex.)	Name	Description	Default (Range)
L8-41 (04F2)	HCA alarm Selection	V/f OLV OLV/PM AOLV/PM EZOLV Sets the function to cause an *HCA [Current Alarm]* when the output current is more than 150% of the drive rated current.	0 (0, 1)

0 : Disabled

The drive will not detect *HCA*.

1 : Enabled

If the output current is more than 150% of the drive rated current, the drive will detect *HCA*.

The MFDO terminal set for an *Alarm [H2-01 to H2-03 = 4]* activates.

■ L8-51: STPo Current Level

No. (Hex.)	Name	Description	Default (Range)
L8-51 (0471) Expert	STPo Current Level	V/f OLV OLV/PM AOLV/PM EZOLV Sets the *STPo [Motor Step-Out Detected]* detection level as a percentage of the motor rated current.	0.0% (0.0 - 300.0%)

Note:

The detection level is automatically calculated when *L8-51 = 0*.

■ L8-52: STPo Integral Level

No. (Hex.)	Name	Description	Default (Range)
L8-52 (0472) Expert	STPo Integral Level	V/f OLV OLV/PM AOLV/PM EZOLV Sets the detection level for *STPo [Motor Step-Out Detected]* related to the ACR integral value.	1.0 (0.1 - 2.0)

■ L8-53: STPo Integral Time

No. (Hex.)	Name	Description	Default (Range)
L8-53 (0473) Expert	STPo Integral Time	V/f OLV OLV/PM AOLV/PM EZOLV Sets the length of time until the drive detects *STPo* after it is more than the value of *L8-51 [STPo Current Level]*.	1.0 s (1.0 - 10.0 s)

■ L8-54: STPo Id Diff Detection

No. (Hex.)	Name	Description	Default (Range)
L8-54 (0474) Expert	STPo Id Diff Detection	V/f OLV OLV/PM AOLV/PM EZOLV Sets the Id deviation detection function for *STPo [Motor Step-Out Detected]*.	1 (0, 1)

0 : Disable

1 : Enabled

■ L8-55: DB IGBT Protection

No. (Hex.)	Name	Description	Default (Range)
L8-55 (045F)	DB IGBT Protection	V/f OLV OLV/PM AOLV/PM EZOLV Sets the protection function for the internal braking transistor.	1 (0, 1)

0 : Disable

Disables braking transistor protection.

Use this setting, if enabling the braking transistor can cause an *rF [Braking Resistor Fault]* in these conditions:

- With a regenerative converter, for example D1000.
- With a regenerative unit, for example R1000.
- When connecting braking resistor options to the drive, for example CDBR units.
- Without an internal braking transistor.

1 : Enabled

Protects internal braking transistor when using a braking transistor or optional braking resistors.

■ L8-56: StallP@Acc Activation Time

No. (Hex.)	Name	Description	Default (Range)
L8-56 (047D) Expert	StallP@Acc Activation Time	V/f OLV **OLV/PM** AOLV/PM EZOLV Sets the length time that the acceleration stall prevention function can continue to operate before the drive detects an *STPo [Motor Step-Out Detected]*.	5000 ms (100 - 5000 ms)

Note:

If this value is too small, it can cause incorrect detection of *STPo*. If this value is too large, the drive will not detect *STPo*.

■ L8-57: StallP Retry Counts

No. (Hex.)	Name	Description	Default (Range)
L8-57 (047E) Expert	StallP Retry Counts	V/f OLV **OLV/PM** AOLV/PM EZOLV Sets the number of times the acceleration stall prevention function can operate until speeds agree before the drive detects an *STPo [Motor Step-Out Detected]*.	10 (1 - 10 times)

Note:

If this value is too small, it can cause incorrect detection of *STPo*. If this value is too large, the drive will not detect *STPo*.

■ L8-90: STPo Detect Level

No. (Hex.)	Name	Description	Default (Range)
L8-90 (0175) Expert	STPo Detect Level	V/f OLV **OLV/PM** **AOLV/PM** **EZOLV** Sets the detection level that the control fault must be equal to or more than to cause an *STPo [Motor Step-Out Detected]*.	Determined by A1-02 (0 - 5000 times)

This function detects when PM motors are not synchronized.

The drive cannot detect when motors are not synchronized because the frequency reference is low during start up and the motor is locked. If fault detection is necessary in these conditions, set the control fault detection level to enable detection of desynchronization because of motor locking. Increase the setting in 5-unit increments.

■ L8-93: Lso Detect Time

No. (Hex.)	Name	Description	Default (Range)
L8-93 (073C) Expert	Lso Detect Time	V/f OLV OLV/PM **AOLV/PM** EZOLV Sets the length of time the drive will wait to start baseblock after detecting *LSo [Low Speed Motor Step-Out]*.	1.0 s (0.0 - 10.0 s)

Set this parameter to 0.0 to disable the function.

■ L8-94: Lso Detect Level

No. (Hex.)	Name	Description	Default (Range)
L8-94 (073D) Expert	Lso Detect Level	V/f OLV OLV/PM **AOLV/PM** EZOLV Sets the detection level for *LSo [Low Speed Motor Step-Out]* as a percentage of *E1-04 [Max Output Frequency]*.	3% (0 - 10%)

■ L8-95: Lso Amount

No. (Hex.)	Name	Description	Default (Range)
L8-95 (077F) Expert	Lso Amount	V/f OLV OLV/PM **AOLV/PM** EZOLV Sets the average count of *LSo [Low Speed Motor Step-Out]* detections.	10 (1 - 50 times)

12.9 n: SPECIAL

n parameters set these functions:

- Function to prevent hunting
- High-slip braking
- Motor line-to-line resistance online tuning
- Fine-tune the parameters that adjust motor control

◆ n1: HUNTING PREVENTION

The Hunting Prevention function will not let low inertia or operation with a light load cause hunting. Hunting frequently occurs when you have a high carrier frequency and an output frequency less than 30 Hz.

■ n1-01: HuntPrev Selection

No. (Hex.)	Name	Description	Default (Range)
n1-01 (0580)	HuntPrev Selection	V/f OLV OLV/PM AOLV/PM EZOLV Sets the function to prevent hunting.	0 (0, 1)

When drive response is more important than the decrease of motor vibration, disable this function.

0 : Disabled

1 : Enabled

■ n1-02: HuntPrev Gain Setting

No. (Hex.)	Name	Description	Default (Range)
n1-02 (0581) Expert	HuntPrev Gain Setting	V/f OLV OLV/PM AOLV/PM EZOLV Sets the performance of the hunting prevention function. Usually it is not necessary to change this parameter.	1.00 (0.00 - 2.50)

Adjust this parameter in these conditions:

- When *n1-01 = 1, 2 [HuntPrev Selection = Enabled, Enabled (High Carrier)]*, if oscillation occurs when you operate a motor with a light load, increase the setting value in 0.1-unit increments.
- When *n1-01 = 1, 2*, if the motor stalls, decrease the setting value in 0.1-unit increments.

■ n1-03: HuntPrev Time Constant

No. (Hex.)	Name	Description	Default (Range)
n1-03 (0582) Expert	HuntPrev Time Constant	V/f OLV OLV/PM AOLV/PM EZOLV Sets the primary delay time constant of the hunting prevention function. Usually it is not necessary to change this parameter.	Determined by o2-04 (0 - 500 ms)

Adjust this parameter in these conditions:

- Load inertia is large: Increase the setting value. If the setting value is too high, response will be slower. Also, there will be oscillation when the frequency is low.
- Oscillation occurs at low frequencies: Decrease the setting value.

■ n1-05: HuntPrev Gain Reverse Mode

No. (Hex.)	Name	Description	Default (Range)
n1-05 (0530) Expert	HuntPrev Gain Reverse Mode	V/f OLV OLV/PM AOLV/PM EZOLV Sets the performance of the hunting prevention function. This parameter adjusts Reverse run. Usually it is not necessary to change this parameter.	0.00 (0.00 - 2.50)

Note:

When you set *n1-05 = 0*, the value set in *n1-02 [HuntPrev Gain Setting]* is effective when the motor rotates in reverse.

Adjust this parameter in these conditions:

- When *n1-01 = 1, 2 [HuntPrev Selection = Enabled, Enabled (High Carrier)]*, if oscillation occurs when you operate a motor with a light load, increase the setting value in 0.1-unit increments.

• When *n1-01 = 1, 2*, if the motor stalls, decrease the setting value in 0.1-unit increments.

■ n1-13: DCBus Stab.Control

No. (Hex.)	Name	Description	Default (Range)
n1-13 (1B59) Expert	DCBus Stab.Control	V/f OLV OLV/PM AOLV/PM EZOLV Sets the oscillation suppression function for the DC bus voltage.	0 (0, 1)

0 : Disabled

1 : Enabled

Note:

If the DC bus voltage does not become stable with light loads and the drive detects *ov [Overvoltage]*, set this parameter to 1.

■ n1-14: DCBus Stab Time

No. (Hex.)	Name	Description	Default (Range)
n1-14 (1B5A) Expert	DCBus Stab Time	V/f OLV OLV/PM AOLV/PM EZOLV Adjusts the responsiveness of the oscillation suppression function for the DC bus voltage. Set *n1-13 = 1 [DCBus Stab.Control = Enabled]* to enable this parameter.	100.0 ms (50.0 - 500.0 ms)

Note:

Adjust this parameter in 100 ms increments.

◆ n2: AFR - AUTO FREQ REGULATION

The speed feedback detection reduction function (or AFR: Automatic Frequency Regulator) helps the speed become stable when you suddenly apply or remove a load.

Note:

Before you change *n2-xx parameters*, do one of these procedures:
• Set the motor parameters and V/f pattern correctly.
• Do Rotational Auto-Tuning.

■ n2-01: AFR Gain

No. (Hex.)	Name	Description	Default (Range)
n2-01 (0584)	AFR Gain	V/f OLV OLV/PM AOLV/PM EZOLV Sets the gain of the AFR function as a magnification value. Usually it is not necessary to change this setting.	1.00 (0.00 - 10.00)

Adjust this parameter in these conditions:

- If hunting or oscillation occurs with light loads, increase the setting value in 0.05-unit increments and examine the response.
- When torque is not sufficient with heavy loads or to make the torque or speed response better, decrease the setting value in 0.05-unit increments and examine the response.

■ n2-02: AFR Time 1

No. (Hex.)	Name	Description	Default (Range)
n2-02 (0585)	AFR Time 1	V/f OLV OLV/PM AOLV/PM EZOLV Sets the time constant that sets the rate of change for the AFR function. Usually it is not necessary to change this setting.	50 ms (0 - 2000 ms)

Adjust this parameter in these conditions:

- If there is hunting or oscillation with a light load, increase the setting value in 50 ms increments and examine the response. If the load inertia is large, increase the setting value in 50 ms increments and examine the response.
- If torque is not sufficient with a heavy load or if you must increase torque or speed responsiveness, decrease the setting value in 10 ms increments and examine the response.

Note:
- Set *n2-02 ≤ n2-03 [AFR Time 1 ≤ AFR Time 2]*. If *n2-02 > n2-03*, the drive will detect *oPE08 [Parameter Selection Error]*.
- When you change the value in *n2-02*, also change the value in *C4-02 [Trq Comp Delay Time]* by the same ratio.

■ n2-03: AFR Time 2

No. (Hex.)	Name	Description	Default (Range)
n2-03 (0586)	AFR Time 2	V/f OLV OLV/PM AOLV/PM EZOLV Sets the time constant that sets the speed difference of the AFR function. Use this parameter for speed searches or regeneration. Usually it is not necessary to change this setting.	750 ms (0 - 2000 ms)

Adjust this parameter in these conditions:

- If the drive detects *ov [Overvoltage]* when acceleration stops under high-inertia loads, increase the setting value in 50 ms increments.
  If the drive detects *ov* when the load changes suddenly, increase the setting value in 50 ms increments.
- To increase the responsiveness of torque and speed, decrease the setting value in 10 ms increments and examine the response.

Note:
- Set *n2-02 ≤ n2-03 [AFR Time 1 ≤ AFR Time 2]*. If *n2-02 > n2-03*, the drive will detect *oPE08 [Parameter Selection Error]*.
- When you change the value in *n2-03*, also change the value in *C4-06 [M2 Trq Comp Delay Time]* by the same ratio.

◆ n3: HIGHSLIP/OVEREXCITATION BRAKE

n3 parameters configure High Slip Braking and Overexcitation Deceleration.

■ High Slip Braking (HSB)

High slip braking quickly decelerates motors without braking resistors.

This lets you stop a motor more quickly than with the ramp to stop processes. This function is best for applications that do not frequently stop the motor, for example the fast stop function for high-inertia loads. Braking starts when the MFDI for *HiSlipBraking [H1-xx = 32]* activates.

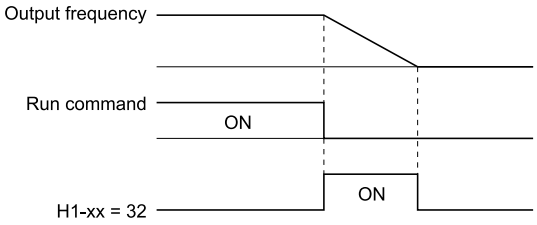

Figure 12.129 High Slip Braking Time Chart

An induction motor is necessary to use high slip braking. Set *A1-02 = 0 [Control Method = V/f Control]* to enable high slip braking:

Principles of Operation

HSB increases motor slip by significantly decreasing the frequency supplied to the motor at the same time that deceleration starts. A large quantity of current flows through the motor to increase the motor loss, and the motor decelerates while the motor windings consume the regenerative energy.

The drive keeps the motor current at a constant level during deceleration to prevent overvoltage and do automatic braking and it also keeps a slip level that causes the maximum quantity of deceleration torque.

High Slip Braking Precautions

- Do not use the high slip braking function in these applications:
  - Frequent deceleration
  - Deceleration time differences
  - Continuous regenerative loads
  - It is necessary to accelerate again during deceleration
- Motor loss increases during high slip braking. Use this function when the duty time factor is 5% ED or less and the braking time is 90 seconds or less. The load inertia and motor characteristics have an effect on the braking time.

- The drive ignores the configured deceleration time during high slip braking. To stop motors in the configured deceleration time, set *L3-04 = 1 [StallP@Decel Enable = Enabled]* and *L3-50 = 3 [StallP@Decel Mode = HiFlux Overexcitation]*.
- You cannot use high slip braking to decelerate deceleration at user-defined speeds. To decelerate at user-defined speeds, use the overexcitation deceleration function.
- You cannot accelerate the motor again during high slip braking until you fully stop the motor and input the Run command again.
- You cannot use high slip braking and the KEB Ride-Thru function at the same time. If you enable those two functions, the drive will detect *oPE03 [Multi-Function Input Setting Err]*.

■ Overexcitation Deceleration

Overexcitation deceleration quickly decelerates motors without braking resistors. This lets you stop a motor more quickly than with the ramp to stop processes.

Overexcitation deceleration increases excitation current during deceleration to cause a large quantity of braking torque through motor overexcitation. You can set the deceleration speed to adjust the deceleration time for overexcitation deceleration. Overexcitation deceleration lets you accelerate the motor again during deceleration. Enter the Run command during overexcitation deceleration to cancel overexcitation deceleration and accelerate the drive to the specified speed.

To enable this function, set *L3-04 = 1 [StallP@Decel Enable = Enabled]* and L3-50 = 3, 4 [StallP@Decel Mode = HiFlux Overexcitation, HiFlux2 Overexcitation].

When *L3-04 = 4*, the motor will decelerate for the *Deceleration Times [C1-02, C1-04, C1-06, or C1-08]*. If the drive detects *ov [Overvoltage]*, increase the deceleration time.

When *L3-04 = 5*, the drive uses the value in *C1-02, C1-04, C1-06, or C1-08* to decelerate and it adjusts the deceleration rate to keep the DC bus voltage at the level set in *L3-17 [DCBus Regul.Level]*. The load inertia and motor characteristics have an effect on the braking time.

Notes on Overexcitation Deceleration

- Do not use Overexcitation Deceleration with a braking resistor.
- Do not use Overexcitation Deceleration for these applications. Connect a braking resistor to the drive as an alternative to Overexcitation Deceleration.
  - Frequent sudden decelerations
  - Continuous regenerative loads
  - Low inertia machines
  - Machines that have no tolerance for torque ripples
- Motor loss increases during overexcitation deceleration. Use this function when the duty time factor is 5% ED or less and the braking time is 90 seconds or less. The load inertia and motor characteristics have an effect on the braking time.
- You can use overexcitation deceleration in OLV control, but this control method decreases the precision of torque control and braking efficiency. Use V/f control for the best results.
- The drive disables these functions during braking with Overexcitation Deceleration 2:
  - Hunting Prevention Function (V/f Control)
  - Torque Limit Speed Control (OLV Control)

■ n3-01: HSB Dec Freq Width

No. (Hex.)	Name	Description	Default (Range)
n3-01 (0588) Expert	HSB Dec Freq Width	V/f OLV OLV/PM AOLV/PM EZOLV Sets the amount by which the output frequency is to be lowered during high-slip braking, as a percentage of *E1-04 [Max Output Frequency]*, which represents the 100% value.	5% (1 - 20%)

When you must detect *ov [DC Bus Overvoltage]* during high-slip braking, set this parameter to a large value.

■ n3-02: HSB CurrLim Level

No. (Hex.)	Name	Description	Default (Range)
n3-02 (0589) Expert	HSB CurrLim Level	V/f OLV OLV/PM AOLV/PM EZOLV Sets the maximum current output during high-slip braking as a percentage, where *E2-01 [Mot Rated Current (FLA)]* is 100%. Also set the current suppression to prevent exceeding drive overload tolerance.	Determined by C6-01 and L8-38 (0 - 150%)

Note:

The upper limit to the setting range changes when the setting for *C6-01 [Normal / Heavy Duty Selection]* changes.
- 150% when *C6-01 = 0 [HD Rating]*
- 120% when *C6-01 = 1 [ND Rating]*

When you decrease the setting value for current suppression, it will make the deceleration time longer.

- When you must detect *ov [DC Bus Overvoltage]* during high-slip braking, set this parameter to a low value.
- If the motor current increases during high-slip braking, decrease the setting value to prevent burn damage in the motor.
- The overload tolerance for the drive is 150% for Heavy Duty Rating (HD) and 110% for Normal Duty Rating (ND).

■ n3-03: HSB DwellTime@Stop

No. (Hex.)	Name	Description	Default (Range)
n3-03 (058A) Expert	HSB DwellTime@Stop	V/f OLV OLV/PM AOLV/PM EZOLV Sets the dwell time, a length of time when high-slip braking is ending and during which the motor speed decreases and runs at a stable speed. For a set length of time, the drive will hold the actual output frequency at the minimum output frequency set in *E1-09*.	1.0 s (0.0 - 10.0 s)

If there is too much inertia or when the motor is coasting to a stop after high-slip braking is complete, increase the setting value. If the setting value is too low, machine inertia can cause the motor to rotate after high-slip braking is complete.

■ n3-04: HSB Overload Time

No. (Hex.)	Name	Description	Default (Range)
n3-04 (058B) Expert	HSB Overload Time	V/f OLV OLV/PM AOLV/PM EZOLV Sets the time used to detect *oL7 [High Slip Braking Overload]*, which occurs when the output frequency does not change during high-slip braking. Usually it is not necessary to change this parameter.	40 s (30 - 1200 s)

If a force on the load side is rotating the motor or if there is too much load inertia connected to the motor, the drive will detect *oL7*.

The current flowing to the motor from the load can overheat the motor and cause burn damage to the motor. Set this parameter to prevent burn damage to the motor.

■ n3-13: OverExcBr Gain

No. (Hex.)	Name	Description	Default (Range)
n3-13 (0531)	OverExcBr Gain	V/f OLV OLV/PM AOLV/PM EZOLV Sets the gain value that the drive multiplies by the V/f pattern output value during overexcitation deceleration to calculate the overexcitation level.	1.10 (1.00 - 1.40)

The V/f pattern output value goes back to its usual level after the motor stops or accelerates again to the frequency reference speed.

The best value of this parameter changes when the flux saturation characteristics of the motor change.

- Gradually increase the value of *n3-13* to 1.25 or 1.30 to increase the braking power of Overexcitation Deceleration. If the gain is too much, the motor can have flux saturation and cause a large quantity of current to flow. This can increase the deceleration time.
- Decrease the setting value if flux saturation causes overcurrent. If you increase the setting value, the drive can detect *oC [Overcurrent]*, *oL1 [Motor Overload]*, and *oL2 [Drive Overload]*. Decrease the value of *n3-21 [OverExcBr Current Level]* to prevent *oC* and *oL*.
- Regular use of overexcitation deceleration or extended periods of overexcitation deceleration can increase internal motor temperatures. Decrease the setting value in these conditions.

• If *ov [Overvoltage]* occurs, increase the deceleration time.

■ n3-14: OverExcBr Harmonics Selection

No. (Hex.)	Name	Description	Default (Range)
n3-14 (0532) Expert	OverExcBr Harmonics Selection	V/f OLV OLV/PM AOLV/PM EZOLV Sets the function that injects harmonic signals during overexcitation deceleration.	0 (0, 1)

Enable this parameter to set a shorter deceleration time.

Note:
- If you frequently use overexcitation deceleration on a motor, the motor loss will increase the risk of burn damage.
- When you set this parameter to *1*, the motor can make a loud excitation sound during overexcitation deceleration. If the excitation sound is unwanted, set this parameter to *0* to disable the function.

0 : Disabled

1 : Enabled

The drive injects harmonic signals at the time of overexcitation deceleration. You can decrease the deceleration time because motor loss increases.

■ n3-21: OverExcBr Current Level

No. (Hex.)	Name	Description	Default (Range)
n3-21 (0579)	OverExcBr Current Level	V/f OLV OLV/PM AOLV/PM EZOLV Sets the upper limit of the current that is suppressed at the time of overexcitation deceleration as a percentage of the drive rated current.	100% (0 - 150%)

If flux saturation during Overexcitation Deceleration makes the motor current become more than the value set in this parameter, the drive will automatically decrease the overexcitation gain. If *oC [Overcurrent]*, *oL1 [Motor Overload]*, or *oL2 [Drive Overloaded]* occur during overexcitation deceleration, decrease the setting value.

If repetitive or long overexcitation deceleration cause the motor to overheat, decrease the setting value.

■ n3-23: OverExcBr Operation

No. (Hex.)	Name	Description	Default (Range)
n3-23 (057B)	OverExcBr Operation	V/f OLV OLV/PM AOLV/PM EZOLV Sets the direction of motor rotation where the drive will enable overexcitation.	1 (1 - 3)

1 : Enabled@Both directions

2 : Enabled@FW direction

3 : Enabled@REV direction

Note:

When *n3-23 = 2, 3*, the drive enables overexcitation only in the direction of motor rotation in which a regenerative load is applied. Increased motor loss can decrease *ov [Overvoltage]* faults.

◆ n5: FEED FORWARD CONTROL

Feed forward control increases the responsiveness of acceleration and deceleration as specified by the speed reference.

Increase the values set in *C5-01 and C5-03 [ASR PGain 1 and ASR PGain 2]* to apply feed forward control to machines that have low rigidity and are possible to have hunting and vibration or to machines that have a large quantity of inertia. Refer to Figure 12.130 for more information about parameters related to feed forward control.

Set *A1-02 = 6 [Control Method = PM AOLVector]* to enable feed forward control.

Note:
- You cannot use feed forward control to increase responsiveness in applications where you apply loads externally during run at constant speed.
- You cannot use feed forward control with motor 2.

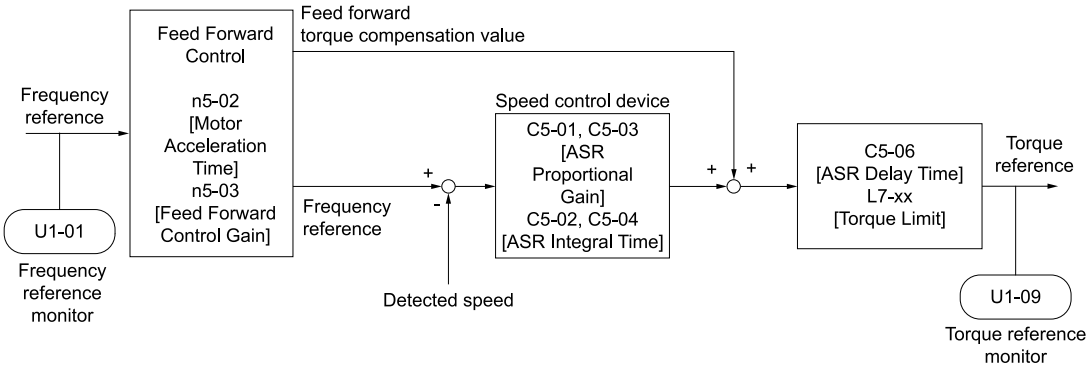

Figure 12.130 Configure Feed Forward Control

■ Before You Use Feed Forward Control

Do one of these procedures before you use feed forward control.

- Run Auto-Tuning to set motor parameters.
  When you cannot do Auto-Tuning, manually set motor parameters with the information on the motor nameplate or test reports. Set *E2: MOTOR 1 PARAMETERS* for induction motors. Set *E5: PM MOTOR SETTINGS* for PM motors.
- Set *C5: ASR - SPEED REGULATION* individually to adjust the speed control loop (ASR).
- If you can connect a motor to a machine and rotate it during Auto-Tuning, do Inertia Tuning.
  The drive automatically adjusts feed forward parameters during Inertia Tuning.
- If you cannot do Inertia Tuning, refer to Figure 12.130 and set the parameters related to feed forward control individually.

■ n5-01: FF Control Selection

No. (Hex.)	Name	Description	Default (Range)
n5-01 (05B0)	n5: FF Control Selection	V/f OLV OLV/PM AOLV/PM EZOLV Sets the feed forward function.	0 (0, 1)

0 : Disabled

1 : Enabled

■ n5-02: Mot Inertia Acceleration Time

No. (Hex.)	Name	Description	Default (Range)
n5-02 (05B1)	Mot Inertia Acceleration Time	V/f OLV OLV/PM AOLV/PM EZOLV Sets the length of time for the motor to accelerate from the stopped to the maximum frequency with a single motor at the rated torque. Inertia Tuning automatically sets the motor acceleration time.	Determined by C6-01, E5-01, and o2-04 (0.001 - 10.000 s)

If you cannot do Inertia Tuning, calculate the motor acceleration time as shown here or measure the motor acceleration time and set *n5-02* to this value.

Calculate the Motor Acceleration Time

Use this formula to find the motor acceleration time:

$$\text{n5-02} = \frac{2\pi \cdot J_{Motor} \cdot n_{rated}}{60 \cdot T_{rated}}$$

- J_{Motor} = Moment of inertia of motor (kg m^2)
- n_{rated} = Motor rated speed (min^{-1}, r/min)
- T_{rated} = Motor rated torque (N m)

You can also use this formula to find the motor acceleration time:

$$\text{n5-02} = \frac{4\pi \cdot J_{Motor} \cdot f_{rated}}{p \cdot T_{rated}}$$

- f_{rated} = Motor rated frequency (Hz)
- P = Number of motor poles

Calculate the Motor Acceleration Time

Use this procedure to calculate the motor acceleration time:

1. Use *A1-02 [Control Method]* to set the control method.
2. Disconnect the motor and load.
3. Run Auto-Tuning to set motor parameters.
   When you cannot do Auto-Tuning, manually set motor parameters with the information on the motor nameplate or test reports. Set the *E2 parameters* for induction motors. Set the *E5 parameters* for PM motors.
4. Set *C5: ASR - SPEED REGULATION*.
5. Set *C1-01 [Accel Time 1] = 0*.
6. Set *L7-01 [FW Torque Limit]* to 100%.
7. Set the frequency reference to the same value as the motor rated speed.
8. Measure the length of time for the motor to reach the rated speed.
   Show *U1-05 [Motor Speed]* on the keypad and enter the Run command (forward run).
9. Stop the motor.
10. Set *n5-02* to the measured motor acceleration time value.

Reset all of the parameters that you changed to the previous setting values.

■ n5-03: FF Control Gain

No. (Hex.)	Name	Description	Default (Range)
n5-03 (05B2)	FF Control Gain	V/f OLV OLV/PM AOLV/PM EZOLV Sets the ratio between load inertia and motor inertia. Inertia Tuning automatically sets the Feedforward Control Gain value.	1.00 (0.00 - 100.00)

When you cannot do Inertia Tuning, use this procedure to set n5-03:

Set *n5-02 [Mot Inertia Acceleration Time]*.

1. Connect the motor and load.
2. Set *C1-01 [Accel Time 1] = 0*.
3. Use *L7-01 to L7-04 [Torque Limit]* to set the expected test run torque limit levels.
4. Set the frequency reference as specified by the high speed range of the machine.
5. Measure the length of time for the motor to reach the command reference speed.
   Show *U1-05 [Motor Speed]* on the keypad and enter the Run command.
6. Stop the motor.
7. Replace the values in the this formula and set *n5-03* to the value of the formula.

$$\text{n5-03} = \frac{t_{accel} \cdot T_{Lim_Test} \cdot f_{rated}}{\text{n5-02} \cdot f_{ref_Test} \cdot 100} - 1$$

- t_{accel} = Acceleration time (s)
- f_{rated} = Motor rated frequency (Hz)
- T_{Lim_Test} = Test run torque limit (%)
- f_{ref_Test} = Test run frequency reference (Hz)

WARNING! *Sudden Movement Hazard. Machinery can accelerate suddenly. Do not use this function with machinery that must not accelerate suddenly. Sudden starts can cause serious injury or death.*

Reset all of the parameters that you changed to the previous setting values.

Note:

- If response to the speed reference is slow, increase the value set in *n5-03*.
- Increase the value set in *n5-03* when response to the speed reference is slow.
  - The speed is overshooting.
  - A negative torque reference is output when acceleration ends.

■ n5-04: Speed Response Frequency

No. (Hex.)	Name	Description	Default (Range)
n5-04 (05B3) RUN Expert	Speed Response Frequency	V/f OLV OLV/PM AOLV/PM EZOLV Sets the response frequency for the speed reference. Usually it is not necessary to change this parameter.	Determined by A1-02 (0.00 - 500.00 Hz)

If you set *n5-03 [FF Control Gain]* too high, the motor speed will momentarily increase to more than the set frequency.

◆ n6: ONLINE TUNING

n6 parameters are used to set the online tuning function for motor line-to-line resistance.

The Online Tuning for motor line-to-line resistance is used to prevent degradation of speed control accuracy due to motor temperature fluctuation and motor stalls due to insufficient torque.

■ n6-01: Online Tune Selection

No. (Hex.)	Name	Description	Default (Range)
n6-01 (0570)	Online Tune Selection	V/f **OLV** OLV/PM AOLV/PM EZOLV Sets the type of motor data that Online Tuning uses for OLV control.	0 (0 - 2)

0 : Disabled

1 : Line-to-Line Resistance Tuning

The drive adjusts the motor line-to-line resistance during run. This procedure is applicable for speed values 6 Hz and less. It also adjusts the motor resistance value to increase the overload capacity in the low speed range.

2 : VoltageAdjustment

The drive adjusts the output voltage during run to increase overload tolerance and minimize the effects of high temperatures on speed precision.

Note:

Setting 2 is enabled only when *b8-01 = 0 [eSave Ctrl Selection = Disabled]*.

■ n6-05: Online Tune Gain

No. (Hex.)	Name	Description	Default (Range)
n6-05 (05C7) Expert	Online Tune Gain	V/f **OLV** OLV/PM AOLV/PM EZOLV Sets the compensation gain when *n6-01 = 2 [Online Tune Selection = VoltageAdjustment]*. Usually it is not necessary to change this parameter.	1.0 (0.1 - 50.0)

When you use a motor that has a large secondary circuit time constant, decrease the setting value.

If the drive detects *oL1 [Motor Overload]*, increase the setting value in 0.1-unit increments.

◆ n7: SIMPLE VECTOR TUNING

The *n7 parameters* provide special adjustments for EZ Vector Control.

■ n7-01: LoFreq Damping Gain

No. (Hex.)	Name	Description	Default (Range)
n7-01 (3111) Expert	LoFreq Damping Gain	V/f OLV OLV/PM AOLV/PM **EZOLV** Sets the oscillation suppression gain for the low speed range.	1.0 (0.1 - 10.0)

Note:

- If oscillation occurs in the low speed range, increase the acceleration time or increase the setting value in 0.5-unit increments.
- To get starting torque with the setting for *C4-01 [Trq Comp Gain]*, decrease the setting value in 0.3-unit increments.

■ n7-05: TrqCtrl Response Gain

No. (Hex.)	Name	Description	Default (Range)
n7-05 (3115) Expert	TrqCtrl Response Gain	V/f OLV OLV/PM AOLV/PM **EZOLV** Sets the response gain related to changes in the load.	50 (10 - 1000)

Note:

To make tracking related to load changes better, increase the setting value in 5-unit increments. If oscillation occurs during load changes, decrease the setting value in 5-unit increments.

■ n7-07: Speed Calc.Gain1

No. (Hex.)	Name	Description	Default (Range)
n7-07 (3117) Expert	Speed Calc.Gain1	V/f OLV OLV/PM AOLV/PM EZOLV Sets the speed calculation gain during usual operation. Usually it is not necessary to change this setting.	15.0 Hz (1.0 - 50.0 Hz)

■ n7-08: Speed Calc.Gain2

No. (Hex.)	Name	Description	Default (Range)
n7-08 (3118) Expert	Speed Calc.Gain2	V/f OLV OLV/PM AOLV/PM EZOLV Sets the speed calculation gain during a speed search.	25.0 Hz (1.0 - 50.0 Hz)

Note:

When you increase the setting value, you can do a speed search of a motor rotating at a high frequency. If the setting value is too high, the calculated speed will oscillate and a restart will fail. Decrease the setting value in these conditions.

■ n7-10: Pull-in SwitchSpeed

No. (Hex.)	Name	Description	Default (Range)
n7-10 (311A) Expert	Pull-in SwitchSpeed	V/f OLV OLV/PM AOLV/PM EZOLV Sets the speed range to operate with the pull-in current command. Drive rated frequency = 100% value. If there is a large quantity of oscillation when you operate in the low speed range, increase the setting value.	10.0% (0.0 - 100.0%)

Note:

- When the drive accelerates, it enables these settings:
  - –Motor speed ≤ *n7-10 + n7-11 [Drv Mode Switch Hysteresis Band]*: *n8-51 [Ac/Dec Pull-In Current]*
  - –Motor speed > *n7-10 + n7-11*: *b8-01 [eSave Ctrl Selection]*
- When the drive decelerates, it enables these settings:
  - –Motor speed ≤ *n7-10*: *n8-51 [Ac/Dec Pull-In Current]*
  - –Motor speed > *n7-10*: *b8-01 [eSave Ctrl Selection]*
- If there is a large quantity of oscillation when you operate in the low speed range, increase the setting value.
- When it is most important to save energy in the low speed range, decrease the setting value.

■ n7-17: Resist.Temp.Compensation

No. (Hex.)	Name	Description	Default (Range)
n7-17 (3122)	Resist.Temp.Compensation	V/f OLV OLV/PM AOLV/PM EZOLV Sets the function to adjust for changes in the motor resistance value caused by changes in the temperature.	2 (1 to 3)

1 : Invalid

2 : Valid (1 Time)

3 : Valid (Every Time)

Note:

- For settings 1 and 2, the adjustment time can cause a delay before startup.
- For settings 1 and 2, the drive can set the line-to-line resistance value of *E9-10 [Motor L-L Resistance]*.
- When the temperature will change at startup, use setting 2.
- To decrease the startup time, set this parameter to 0, then do line-to-line resistance tuning.
- If you will start from coasting, set this parameter to 0, then do line-to-line resistance tuning.

■ n7-19: FluxErr CompGain

No. (Hex.)	Name	Description	Default (Range)
n7-19 (3128) Expert	FluxErr CompGain	V/f OLV OLV/PM AOLV/PM EZOLV Sets the gain for magnetic flux compensation. Usually it is not necessary to change this setting.	5000% (0 - 50000%)

◆ n8: PM MOTOR CONTROL TUNING

n8 parameters are used to make adjustments when controlling PM motors.

■ n8-01: PolPos Detection Current

No. (Hex.)	Name	Description	Default (Range)
n8-01 (0540) Expert	PolPos Detection Current	V/f OLV **OLV/PM** **AOLV/PM** EZOLV Sets, as a percentage, the Initial Rotor Position Estimated Current, taking the *E5-03 [PM Mot Rated Current (FLA)]* as the 100% value. Usually it is not necessary to change this setting.	50% (0 - 100%)

The drive uses the Initial Rotor Position Estimated Current to detect the initial position of rotors.
Use the "Si" value on the motor nameplate, if available.

■ n8-02: Pole Align Current Level

No. (Hex.)	Name	Description	Default (Range)
n8-02 (0541) Expert	Pole Align Current Level	V/f OLV OLV/PM **AOLV/PM** EZOLV Sets the current at the time of polar attraction as a percentage where *E5-03 [PM Mot Rated Current (FLA)]* is 100%. Usually it is not necessary to change this setting.	80% (0 - 150%)

The drive uses the polar pull-in current to attract the rotor after it detects the initial rotor position. When you increase the value of *n8-02*, the starting torque also increases.

- If the motor does not track correctly at the time of the polar attraction, increase the value in 10% increments.
- If the motor oscillates at the time of the polar attraction, decrease the value in 10% increments.

■ n8-11: Observ.Calc Gain2

No. (Hex.)	Name	Description	Default (Range)
n8-11 (054A)	Observ.Calc Gain2	V/f OLV OLV/PM **AOLV/PM** EZOLV Sets the gain for speed estimation. Usually it is not necessary to change this setting.	Determined by n8-72 (0.0 - 1000.0)

Note:
When *n8-72 = 1 [Spd Obs. Method Selection = Method 1]*, the default value is 50.0. When *n8-72 = 2 [Method 2]*, the default value is 150.0.

■ n8-14: Polar Comp Gain3

No. (Hex.)	Name	Description	Default (Range)
n8-14 (054D) Expert	Polar Comp Gain3	V/f OLV OLV/PM **AOLV/PM** EZOLV Sets the gain for speed estimation. Usually it is not necessary to change this setting.	1.000 (0.000 - 10.000)

■ n8-15: Polar Comp Gain4

No. (Hex.)	Name	Description	Default (Range)
n8-15 (054E) Expert	Polar Comp Gain4	V/f OLV OLV/PM **AOLV/PM** EZOLV Sets the gain for speed estimation. Usually it is not necessary to change this setting.	0.500 (0.000 - 10.000)

■ n8-21: Mot Back-EMF (Ke) Gain

No. (Hex.)	Name	Description	Default (Range)
n8-21 (0554) Expert	Mot Back-EMF (Ke) Gain	V/f OLV OLV/PM **AOLV/PM** EZOLV Sets the gain for speed estimation. Usually it is not necessary to change this setting.	0.90 (0.80 - 1.00)

■ n8-35: InitRotorPos Selection

No. (Hex.)	Name	Description	Default (Range)
n8-35 (0562)	InitRotorPos Selection	V/f OLV **OLV/PM** AOLV/PM EZOLV Sets how the drive detects the position of the rotor when the motor starts.	Determined by A1-02 (1 - 3)

Note:
- When you use an SPM motor, set *n8-35 = 1*.
- When you set *n8-35 = 2*, do High Frequency Injection Auto-Tuning.
- When you set *n8-35 = 1 or 3*, always evaluate the drive with the equipment being used for the application. If the drive incorrectly detects the polarity, the motor can rotate in the direction opposite of the Run command.

1 : Pull-In

Starts the rotor with pull-in current.

2 : HiFreq Injection

Injects high frequency to detect the rotor position. This setting can cause a loud excitation sound when the motor starts.

Note:

When you set *2*, do High Frequency Injection Auto-Tuning.

3 : Pulse Injection

Inputs the pulse signal to the motor to detect the rotor position.

■ n8-36: HFI Signal Frequency

No. (Hex.)	Name	Description	Default (Range)
n8-36 (0563)	HFI Signal Frequency	V/f OLV **OLV/PM** AOLV/PM EZOLV Sets the injection frequency for high frequency injection.	500 Hz (200 - 1000 Hz)

Note:
- Set *n8-35 = 2 [InitRotorPos Selection = HiFreq Injection]* or *n8-57 = 1 [High-Freq Injection = Enabled]* to enable this parameter.
- The drive automatically calculates this value when High Frequency Injection Auto-Tuning completes successfully.

■ n8-37: HFI Voltage Amplitude Level

No. (Hex.)	Name	Description	Default (Range)
n8-37 (0564) Expert	HFI Voltage Amplitude Level	V/f OLV **OLV/PM** AOLV/PM EZOLV Sets the high frequency injection amplitude as a percentage where 200 V = 100% for 200 V class drives and 400 V = 100% for a 400 V class drives. Usually it is not necessary to change this setting.	20.0% (0.0 - 50.0%)

Note:

Set *n8-35 = 2 [InitRotorPos Selection = HiFreq Injection]* or *n8-57 = 1 [High-Freq Injection = Enabled]* to enable this parameter.

The drive automatically calculates this value when High Frequency Injection Auto-Tuning completes successfully.

■ n8-39: HFI LPF Cutoff Frq

No. (Hex.)	Name	Description	Default (Range)
n8-39 (0566)	HFI LPF Cutoff Frq	V/f OLV **OLV/PM** AOLV/PM EZOLV Sets the low-pass filter shut-off frequency for high frequency injection.	250 Hz (0 - 1000 Hz)

Note:
- Set *n8-35 = 2 [InitRotorPos Selection = HiFreq Injection]* or *n8-57 = 1 [High-Freq Injection = Enabled]* to enable this parameter.
- The drive automatically calculates this value when High Frequency Injection Auto-Tuning completes successfully.

■ n8-41: HFI PoleDet Pgain

No. (Hex.)	Name	Description	Default (Range)
n8-41 (0568) Expert	HFI PoleDet Pgain	V/f OLV **OLV/PM** AOLV/PM EZOLV Sets the response gain for the high frequency injection speed estimation.	2.5 (-10.0 - +10.0)

Note:
- Set *n8-35 = 2 [InitRotorPos Selection = HiFreq Injection]* or *n8-57 = 1 [High-Freq Injection = Enabled]* to enable this parameter.
- Set *n8-41 > 0.0* for IPM motors.

Configure the setting as follows.

- Decrease the setting in units of 0.5 if an oscillation or hunting occurs.
- Increase the setting in units of 0.5 if tracking related to load changes is required.

■ n8-42: HFI PoleDet iTime

No. (Hex.)	Name	Description	Default (Range)
n8-42 (0569) Expert	HFI PoleDet iTime	V/f OLV **OLV/PM** **AOLV/PM** EZOLV Sets the integral time constant for the high frequency injection speed estimation. Usually it is not necessary to change this setting.	0.10 s (0.00 - 9.99 s)

Note:
Set *n8-35 = 2 [InitRotorPos Selection = HiFreq Injection]* or *n8-57 = 1 [High-Freq Injection = Enabled]* to enable this parameter.

■ n8-45: SpdFbck Det.Gain

No. (Hex.)	Name	Description	Default (Range)
n8-45 (0538)	SpdFbck Det.Gain	V/f OLV **OLV/PM** AOLV/PM EZOLV Sets the internal speed feedback detection reduction unit gain as a magnification value. Usually it is not necessary to change this setting.	0.80 (0.00 - 10.00)

Adjust this parameter in these conditions:

- If vibration or hunting occur, increase the setting value in 0.05 unit increments.
- If the responsiveness of torque and speed is unsatisfactory, decrease the setting value 0.05 unit increments and examine the response.

■ n8-47: Pull-In Comp.Time Constant

No. (Hex.)	Name	Description	Default (Range)
n8-47 (053A)	Pull-In Comp.Time Constant	V/f OLV **OLV/PM** AOLV/PM EZOLV Sets the time constant the drive uses to align the pull-in current reference value with the actual current value. Usually it is not necessary to change this setting.	5.0 s (0.0 - 100.0 s)

Adjust this parameter in these conditions:

- If the time for the reference value of the pull-in current to align with the target value is too long, increase the setting value.
- If vibration or hunting occur, decrease the setting value in 0.2 unit increments.
- If the motor stalls during run at constant speed, decrease the setting value in 0.2 unit increments.

■ n8-48: Pull-In Current (for PM Motors)

No. (Hex.)	Name	Description	Default (Range)
n8-48 (053B) RUN	Pull-In Current (for PM Motors)	V/f OLV **OLV/PM** AOLV/PM EZOLV On the basis that parameter *E5-03 [PM Mot Rated Current (FLA)]* is the 100% value, this parameter sets the d-axis current that flows to the motor during run at constant speed as a percentage.	30% (0 - 200%)

Adjust in the following situations.

- Slightly reduce this value if there is too much current when driving a light load at a constant speed.
- Increase the setting value in steps of 5% when hunting or vibration occurs during run at constant speed.
- Increase the setting value in steps of 5% if the motor stalls during run at constant speed.

■ n8-49: Heavy Load Id Current

No. (Hex.)	Name	Description	Default (Range)
n8-49 (053C) RUN Expert	Heavy Load Id Current	V/f OLV **OLV/PM** AOLV/PM EZOLV Sets the d-axis current to that the drive will supply to the motor to run it at a constant speed with a heavy load. Considers *E5-03 [PM Mot Rated Current (FLA)]* to be 100%. Usually it is not necessary to change this setting.	Determined by E5-01 (-200.0 - +200.0%)

When you use an IPM motor, you can use the reluctance torque of the motor to make the motor more efficient and help conserve energy.

When you operate an SPN motor, set this parameter to 0.

Adjust in the following situations.

- If the load is large and motor rotation is not stable, decrease the setting value.
- When you change *E5: PM MOTOR SETTINGS*, set *n8-49 = 0*, then adjust this parameter.

■ n8-50: Medium Load Iq Level (High)

No. (Hex.)	Name	Description	Default (Range)
n8-50 (053D) Expert	Medium Load Iq Level (High)	V/f OLV **OLV/PM** AOLV/PM EZOLV Sets the load current level at which heavy load control starts where *E5-03 [PM Mot Rated Current (FLA)]* is 100%. Usually it is not necessary to change this setting.	80% (50 - 255)

■ n8-51: Ac/Dec Pull-In Current

No. (Hex.)	Name	Description	Default (Range)
n8-51 (053E)	Ac/Dec Pull-In Current	V/f OLV **OLV/PM** AOLV/PM **EZOLV** Sets the pull-in current allowed to flow during acceleration/deceleration as a percentage of the motor rated current.	Determined by A1-02 (0 - 200%)

Adjust in the following situations.

- When the motor does not smoothly because of large loads, increase the setting value in 5% increments.
- If too much current flows during acceleration, decrease the setting value.

Note:

When *A1-02 = 8 [Control Method = EZ Vector]*, this parameter will always be in effect for speed ranges less than *n7-10 [Pull-in SwitchSpeed]*.

■ n8-54: Volt-Err Compensation Time

No. (Hex.)	Name	Description	Default (Range)
n8-54 (056D) Expert	Volt-Err Compensation Time	V/f OLV **OLV/PM** AOLV/PM EZOLV Sets the time constant that the drive uses when adjusting for voltage errors.	1.00 s (0.00 - 10.00 s)

Adjust this parameter in these conditions:

- If oscillation occurs at the time of start up, increase the setting value.
- If hunting occurs when operating at low speed, increase the setting value.
- If fast changes in the load cause hunting, increase the setting value in 0.1-unit increments. If you cannot stop hunting, set *n8-51 [Ac/Dec Pull-In Current]* to 0% and set *n8-54* to 0.00 s, and disable compensation for voltage errors.

■ n8-55: Load Inertia

No. (Hex.)	Name	Description	Default (Range)
n8-55 (056E)	Load Inertia	V/f OLV **OLV/PM** AOLV/PM EZOLV Sets the ratio between motor inertia and machine inertia.	1 (1 - 4)

Adjust in the following situations.

- If torque and speed response is unsatisfactory, gradually increase the setting.
- If the motor does not run smoothly, gradually increase the setting.

- If the motor stalls during run at constant speed, gradually increase the setting.
- If there is vibration or hunting, decrease the setting.

Note:
- If the value is set too low, the drive will detect *STPo [Motor Step-Out Detected]*.
- If you use one motor or more than motor at low inertia and the value is too high, there can be vibration in the motor.

1 : <1:10

Use this setting in these conditions:

- The ratio between the motor inertia and machine inertia is less than 1:10
- There are large current ripples

2 : 1:10-1:30

Use this setting in these conditions:

- The ratio between the motor inertia and machine inertia is approximately 1:10 to 1:30
- Parameter *n8-55 = 1* and the drive detects *STPo* because of an impact load or sudden acceleration/deceleration.

3 : 1:30-1:50

Use this setting in these conditions:

- The ratio between the motor inertia and machine inertia is approximately 1:30 to 1:50
- Parameter *n8-55 = 2* and the drive detects *STPo* because of an impact load or sudden acceleration/deceleration.

4 : >1:50

Adjust in the following situations.

- The ratio between the motor inertia and machine inertia is more than 1:50
- Parameter *n8-55 = 3* and the drive detects *STPo* because of an impact load or sudden acceleration/deceleration.

■ n8-57: High-Freq Injection

No. (Hex.)	Name	Description	Default (Range)
n8-57 (0574)	High-Freq Injection	V/f OLV OLV/PM **AOLV/PM** EZOLV Sets the function that detects motor speed with high frequency injection.	0 (0, 1)

Note:
- When you set *n8-57 = 1*, doHigh Frequency Injection Auto-Tuning.
- When there is high frequency injection, the motor will make an excitation sound.
- When you use Zero Speed Control, set *E1-09 [Min Output Frequency] = 0.0*.

0 : Disabled

Use this setting with SPM motors. The speed control range is approximately 1:20.

When *n8-57 = 0*, you cannot set *E1-09 [Min Output Frequency]* ≤ 1/20 of the value of *E1-06 [Base Frequency]*.

1 : Enabled

The speed control range changes to 1:100 to give sufficient speed detection at low speeds.

Note:

It is not available with an SPM motor.

■ n8-62: Output Volt Limit Level

No. (Hex.)	Name	Description	Default (Range)
n8-62 (057D) Expert	Output Volt Limit Level	V/f OLV **OLV/PM** AOLV/PM EZOLV Sets the output voltage limit to prevent saturation of the output voltage. Usually it is not necessary to change this parameter.	200 V Class: 200.0 V, 400 V: 400.0 V (200 V Class: 0.0 to 230.0 V, 400 V Class: 0.0 to 460.0 V)

Set this parameter lower than the input power supply voltage.

■ n8-63: Output Voltage Limit P Gain

No. (Hex.)	Name	Description	Default (Range)
n8-63 (057E) Expert	Output Voltage Limit P Gain	V/f OLV **OLV/PM** AOLV/PM EZOLV Sets the proportional gain for output voltage control. Usually it is not necessary to change this setting.	1.00 (0.00 - 100.00)

■ n8-65: SpdFbk Gain@OV Suppression

No. (Hex.)	Name	Description	Default (Range)
n8-65 (065C) Expert	SpdFbk Gain@OV Suppression	V/f OLV **OLV/PM** AOLV/PM EZOLV Sets the gain of internal speed feedback detection suppression while the overvoltage suppression function is operating as a magnification value. Usually it is not necessary to change this parameter.	1.50 (0.00 - 10.00)

Adjust this parameter in these conditions:

- If there is resonance or hunting when you use the overvoltage suppression function, increase the setting value.
- If motor response is low when you use the overvoltage suppression function, decrease the setting value in 0.05-unit increments.

■ n8-69: Spd Obs. P Gain Control

No. (Hex.)	Name	Description	Default (Range)
n8-69 (065D) Expert	Spd Obs. P Gain Control	V/f OLV OLV/PM **AOLV/PM** EZOLV Usually it is not necessary to change this setting. Sets the Proportional gain that the drive uses for speed estimation.	1.00 (0.00 - 20.00)

■ n8-72: Spd Obs. Method Selection

No. (Hex.)	Name	Description	Default (Range)
n8-72 (0655) Expert	Spd Obs. Method Selection	V/f OLV OLV/PM **AOLV/PM** EZOLV Selects the speed estimation method. Usually it is not necessary to change this setting.	2 (1, 2)

1 : Method 1

2 : Method 2

■ n8-74: Light Load Iq Level

No. (Hex.)	Name	Description	Default (Range)
n8-74 (05C3) Expert	Light Load Iq Level	V/f OLV **OLV/PM** AOLV/PM EZOLV Set *n8-48 [Pull-In Current (for PM Motors)]* to the percentage of load current (q-axis current) that you will apply, where *E5-03 [PM Mot Rated Current (FLA)] = a setting value of 100%.*	30% (0 - 255%)

Note:

- If *n8-74 > n8-75 [Mid Load Iq Level (Low)]*, the drive will detect *oPE08 [Parameter Selection Error]*.
- The change is linear between *n8-74* and *n8-75* and the level of the pull-in current from *n8-48* to *n8-78 [Mid Load Id Current]*.

■ n8-75: Mid Load Iq Level (Low)

No. (Hex.)	Name	Description	Default (Range)
n8-75 (05C4) Expert	Mid Load Iq Level (Low)	V/f OLV **OLV/PM** AOLV/PM EZOLV Set *n8-78 [Mid Load Id Current]* to the percentage of load current (q-axis current) that you will apply, where *E5-03 [PM Mot Rated Current (FLA)] = a setting value of 100%.*	50% (0 - 255%)

Note:

- If *n8-74 [Light Load Iq Level] > n8-75*, the drive will detect *oPE08 [Parameter Selection Error]*.
- The change is linear between *n8-74* and *n8-75* and the level of the pull-in current from *n8-48* to *n8-78 [Mid Load Id Current]*.

■ n8-76: Id Switching Filter Time

No. (Hex.)	Name	Description	Default (Range)
n8-76 (05CD) Expert	Id Switching Filter Time	V/f OLV **OLV/PM** AOLV/PM EZOLV Sets the filter time constant for the d-axis current reference. Usually it is not necessary to change this setting.	200 ms (0 - 5000)

■ n8-77: Hvy Load Iq Level

No. (Hex.)	Name	Description	Default (Range)
n8-77 (05CE) Expert	Hvy Load Iq Level	V/f OLV **OLV/PM** AOLV/PM EZOLV Set *n8-49 [Heavy Load Id Current]* to the percentage of load current (q-axis current) that you will apply, where *E5-03 [PM Mot Rated Current (FLA)] = a setting value of 100%.*	90% (0 - 255%)

Note:

The change is linear between *n8-75 [Mid Load Iq Level (Low)]* and *n8-77* and the level of the pull-in current from *n8-78 [Mid Load Id Current]* to *n8-49 [Heavy Load Id Current]*.

■ n8-78: Mid Load Id Current

No. (Hex.)	Name	Description	Default (Range)
n8-78 (05F4) RUN Expert	Mid Load Id Current	V/f OLV **OLV/PM** AOLV/PM EZOLV Sets the level of the pull-in current as a percentage, where *E5-03 [PM Mot Rated Current (FLA)] = 100%.*	0% (0 - 255%)

■ n8-79: Pull-In Curr@Deceleration

No. (Hex.)	Name	Description	Default (Range)
n8-79 (05FE)	Pull-In Curr@Deceleration	V/f OLV **OLV/PM** AOLV/PM EZOLV Sets the pull-in current that can flow during deceleration as a percentage of the *E5-03 [PM Mot Rated Current (FLA)]*.	50% (0 - 200%)

If overcurrent occurs during deceleration, slowly decrease the setting in 5% increments.

Note:

When *n8-79 = 0*, the drive will use the value set in *n8-51 [Ac/Dec Pull-In Current]*.

■ n8-84: Polarity Det Current

No. (Hex.)	Name	Description	Default (Range)
n8-84 (02D3) Expert	Polarity Det Current	V/f OLV **OLV/PM** **AOLV/PM** EZOLV Sets the current that the drive uses to estimate the initial motor magnetic pole as a percentage where *E5-03 [PM Mot Rated Current (FLA)] = 100%.*	100% (0 - 150%)

WARNING! *Sudden Movement Hazard. Make sure that the polarity is correct before you send a Run command. If the drive incorrectly detects the polarity, the drive can rotate in the direction opposite of the Run command and cause serious injury or death.*

When you use a Yaskawa motor, check the motor nameplate for an “Si” value and set this parameter ≥ "Si × 2". Consult the motor manufacturer for information about maximum setting values.

Find the Polarity of Magnetic Poles

When you start operation, the drive estimates the magnetic poles and finds the polarity of the magnetic poles.

Use *U6-57 [n8-84: PoleDis IdDifVal]* to make sure that the magnetic pole estimate was correct.

When you do High Frequency Injection Auto-Tuning, the drive automatically sets *n8-84*.

■ n8-87: O/P VoltLim Method

No. (Hex.)	Name	Description	Default (Range)
n8-87 (02BC)	O/P VoltLim Method	V/f OLV **OLV/PM** **AOLV/PM** **EZOLV** Sets the method of output voltage limit. If there is vibration in the constant output range, set Feedforward Method. Usually it is not necessary to change this setting.	0 (0, 1)

0 : Feedback Method

1 : Feedforward Method

■ n8-88: VoutLimSw Level

No. (Hex.)	Name	Description	Default (Range)
n8-88 (02BD)	VoutLimSw Level	V/f OLV **OLV/PM** AOLV/PM **EZOLV** Sets the current level at which output voltage limit sequence selection occurs as a percentage where the motor rated current is 100%. Normally there is no need to change this setting.	400% (0 - 400%)

■ n8-89: VoutLimSwHysteresis

No. (Hex.)	Name	Description	Default (Range)
n8-89 (02BE)	VoutLimSwHysteresis	V/f OLV **OLV/PM** AOLV/PM **EZOLV** Sets the hysteresis width of the current level at which output voltage limit sequence selection occurs as a percentage where the motor rated current is 100%. Normally there is no need to change this setting.	3% (0 - 400%)

■ n8-90: VoutLimSwSpeed

No. (Hex.)	Name	Description	Default (Range)
n8-90 (02BF)	VoutLimSwSpeed	V/f OLV **OLV/PM** AOLV/PM **EZOLV** Sets the speed level at which output voltage limit sequence selection occurs as a percentage where the maximum output frequency is 100%. Usually it is not necessary to change this setting.	200% (0 - 200%)

■ n8-91: VoutLim Id Limit

No. (Hex.)	Name	Description	Default (Range)
n8-91 (02F7)	VoutLim Id Limit	V/f OLV **OLV/PM** AOLV/PM **EZOLV** Sets the limit value of feedback output voltage limit Id operation. Enabled when *n8-87 = 0 [O/P VoltLim Method = Speed Feedback Form]*. Usually it is not necessary to change this setting.	-50% (-200 - 0%)

■ n8-94: FluxPos Est.Method

No. (Hex.)	Name	Description	Default (Range)
n8-94 (012D) Expert	FluxPos Est.Method	V/f OLV OLV/PM **AOLV/PM** EZOLV Sets the criteria that the drive uses to find changes in speed or load. Usually it is not necessary to change this setting.	2 (1, 2)

1 : Softstarter

2 : Speed Feedback

Set *n8-57 = 1 [High-Freq Injection = Enabled]* to enable this parameter. Increases the stability when the speed or load suddenly change, for example with rapid acceleration/deceleration or impact loads.

■ n8-95: FluxPos Est.Filter Time

No. (Hex.)	Name	Description	Default (Range)
n8-95 (012E) Expert	FluxPos Est.Filter Time	V/f OLV OLV/PM **AOLV/PM** EZOLV Sets the time constant of the filter used for the recognition criteria value for speed and load changes. Usually it is not necessary to change this setting.	30 ms (0 - 100 ms)

Note:
Enabled when *n8-94 = 2 [FluxPos Est.Method = Speed Feedback]*.

◆ nA: PM MOTOR CONTROL TUNING

nA parameters make adjustments for controlling PM motors.

■ nA-01: Obs Calc Gain 3

No. (Hex.)	Name	Description	Default (Range)
nA-01 (3129) Expert	Obs Calc Gain 3	V/f OLV OLV/PM AOLV/PM EZOLV Sets the gain for speed estimation. Usually it is not necessary to change this setting.	30.0 (0.0 - 1000.0)

12.10 o: KEYPAD

o parameters set keypad functions.

Note:
You cannot use the optional LED keypad to set these parameters.

Table 12.55 Parameters You Cannot Set with the LED Keypad

No.	Name
o1-05	LCD Contrast Adjustment
o1-24 to o1-35	Custom Monitor 1 to 12
o1-36	LCD Backlight Brightness
o1-37	LCD Backlight ON/OFF Selection
o1-38	LCD Backlight Off-Delay
o1-39	Show Initial Setup Screen
o1-40	Home Screen Display Selection
o1-41 to o1-46	1st to 3rd Monitor Area Selections/Settings
o1-47 to o1-51	Trend Plot 1 or 2 Scale Settings
o1-55 to o1-56	Analog Gauge Area Selection/Setting
o2-27	bCE Detection Selection

No.	Name
o3-04	Select Backup/Restore Location
o3-05	Select Items to Backup/Restore
o3-06	Auto Parameter Backup Selection
o3-07	Auto Parameter Backup Interval
o4-22	Time Format
o4-23	Date Format
o4-24	bAT Detection Selection
o5-01	Log Start/Stop Selection
o5-02	Log Sampling Interval
o5-03 to o5-12	Log Monitor Data 1 to 10

◆ o1: KEYPAD DISPLAY

o1 parameters select the parameters shown on the initial keypad screen and to configure the parameter setting units and display units. These parameters also adjust the backlight and contrast of the LCD display.

■ Home Screen Display Format

o1-40 [Home Screen Selection Mode] changes the display of the monitor shown on the Home screen. You can show numerical values or one of these three displays on the Home screen monitor:

Bar Graph Display

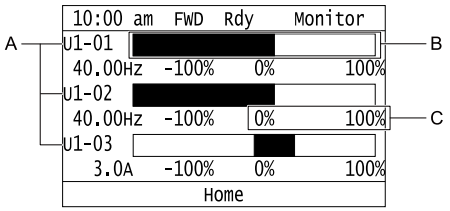

A - Select *Ux-xx [Monitors]* with *o1-24*, *o1-25*, and *o1-26*.

B - Configure display regions with *o1-41*, *o1-43*, and *o1-45*.

C - Select display ranges with *o1-42*, *o1-44*, and *o1-46*.

Analog Gauge Display

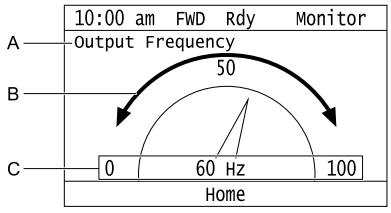

A - Select *Ux-xx [Monitors]* with *o1-24*.

B - Configure display regions with *o1-56*.

C - Select display ranges with *o1-55*.

Trend Plot Display

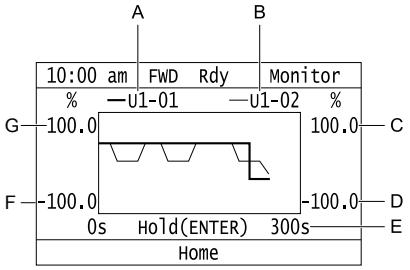

A - Select *Ux-xx [Monitors]* (Monitor 1) with *o1-24*.
B - Select *Ux-xx [Monitors]* (Monitor 2) with *o1-25*.
C - Set the maximum value of Monitor 2 with *o1-50*
D - Set the minimum value of Monitor 2 with *o1-49*
E - Set the time scale with *o1-51*
F - Set the minimum value of Monitor 1 with *o1-47*
G - Set the maximum value of Monitor 1 with *o1-48*

■ o1-01: User Monitor Selection

No. (Hex.)	Name	Description	Default (Range)
o1-01 (0500) RUN	User Monitor Selection	V/f OLV OLV/PM AOLV/PM EZOLV Sets the *U: MONITORS* for the Drive Mode. This parameter is only available when you use an LED keypad.	106 (104 - 855)

When the drive is in Drive Mode, push ⌃ on the keypad to cycle through this data: frequency reference → rotational direction → output frequency → output current → *o1-01* selection.

Set the *x-xx* part of *Ux-xx* that is shown in the fifth position in Drive Mode. For example, to show *U1-05 [Motor Speed]*, set *o1-01 = 105*.

Note:
The monitors that you can select are different for different control methods.

■ o1-02: Mon.Sel@Power-Up

No. (Hex.)	Name	Description	Default (Range)
o1-02 (0501) RUN	Mon.Sel@Power-Up	V/f OLV OLV/PM AOLV/PM EZOLV Sets the monitor item that the keypad screen shows after energizing the drive. Refer to "U: MONITORS" for information about the monitor items that the keypad screen can show. This parameter is only available when you use an LED keypad.	1 (1 - 5)

1 : FreqReference (U1-01)

2 : Direction

3 : OutFrequency (U1-02)

4 : OutCurrent (U1-03)

5 : User Monitor (o1-01)

Shows the monitor item selected in *o1-01 [User Monitor Selection]*.

■ o1-03: FrqDisplay Unit Selection

No. (Hex.)	Name	Description	Default (Setting Range)
o1-03 (0502)	FrqDisplay Unit Selection	V/f OLV OLV/PM AOLV/PM EZOLV Sets the display units for the frequency reference and output frequency.	Determined by A1-02 (0 - 3)

Note:
- Select the setting unit of these parameters:
  - d1-01 to d1-17 [Reference 1 to Jog Reference]
  - U1-01 [Frequency Reference]
  - U1-02 [Output Frequency]
  - U1-05 [Motor Speed]
  - U1-16 [SFS Output Frequency]
  - U4-14 [PeakHold OutFreq]
- For monitor 2, the setting value is always *0 [0.01 Hz]*.

0 : 0.01 Hz

1 : 0.01% (100%=E1-04)

The maximum output frequency is 100%.

2 : rpm

The drive uses the maximum output frequency and number of motor poles calculate this value automatically.

Note:

When you set o1-03 = 2 [r/min], make sure that you set the number of motor poles in these parameters:
- E2-04 [Motor Pole Count]
- E4-04 [M2 Pole Count]
- E5-04 [PM Mot Pole Count]
- E9-08 [Motor Pole Count]

3 : User-selected units

Uses *o1-10* and *o1-11* to set the unit of measure. The value of parameter *o1-10* is the value when you remove the decimal point from the maximum output frequency. Parameter *o1-11* is to the number of digits after the decimal point in the maximum output frequency.

To display a maximum output frequency of 100.00, set parameters to these values:

- o1-10 = 10000
- o1-11 = 2 [FrqDisplay Decimal Places = (XXX.XX) 2 Decimal Places]

■ o1-04: V/f Pattern Unit for Display

No. (Hex.)	Name	Description	Default (Range)
o1-04 (0503)	V/f Pattern Unit for Display	V/f OLV OLV/PM AOLV/PM EZOLV Sets the setting unit for parameters that set the V/f pattern frequency.	Determined by A1-02 (0, 1)

Note:
- Select the units for these parameters:
  - *E1-04 [Max Output Frequency]*
  - *E1-06 [Base Frequency]*
  - *E1-07 [Mid A Frequency]*
  - *E1-09 [Min Output Frequency]*
  - *E1-11 [Mid B Frequency]*
  - *E9-02 [Maximum Speed]*
  - *E9-04 [Base Frequency]*
- For motor 2, the settings are always *0 [Hz]*.

0 : Hz

1 : rpm

When you set *o1-04 = 1 [rpm]*, you must also use these parameters to set the motor pole count:

- *E2-04 [Motor Pole Count]*
- *E5-04 [PM Mot Pole Count]*
- *E9-08 [Motor Pole Count]*

■ o1-05: LCD Contrast Adjustment

No. (Hex.)	Name	Description	Default (Range)
o1-05 (0504) RUN	LCD Contrast Adjustment	V/f OLV OLV/PM AOLV/PM EZOLV Sets the contrast of the LCD display on the keypad.	5 (0 - 10)

When you decrease the setting value, the contrast of the LCD display decreases. When you increase the setting value, the contrast increases.

■ o1-10: FrqDisplay Max Value

No. (Hex.)	Name	Description	Default (Range)
o1-10 (0520)	FrqDisplay Max Value	V/f OLV OLV/PM AOLV/PM EZOLV Sets the value that the drive shows as the maximum output frequency.	Determined by o1-03 (1 - 60000)

To display a maximum output frequency of 100.00, set parameters to these values:

- *o1-10 = 10000*
- *o1-11 = 2 [FrqDisplay Decimal Places = (XXX.XX) 2 Decimal Places]*

Note:
Set *o1-03 = 3 [FrqDisplay Unit Selection = User-selected units]* before you set *o1-10* and *o1-11*.

■ o1-11: FrqDisplay Decimal Places

No. (Hex.)	Name	Description	Default (Range)
o1-11 (0521)	FrqDisplay Decimal Places	V/f OLV OLV/PM AOLV/PM EZOLV Sets the number of decimal places for frequency reference and monitor values.	Determined by o1-03 (0 - 3)

0 : (XXXXX) No Decimal Places
1 : (XXXX.X) 1 Decimal Place
2 : (XXX.XX) 2 Decimal Places
3 : (XX.XXX) 3 Decimal Places

Note:
Set *o1-03 = 3 [FrqDisplay Unit Selection = User-selected units]* before you set *o1-10 [FrqDisplay Max Value]* and *o1-11*.

■ o1-24 to o1-35: Cust.Monitor 1 to 12

No. (Hex.)	Name	Description	Default (Range)
o1-24 to o1-35: (11AD - 11B8) RUN	Cust.Monitor 1 to 12	V/f OLV OLV/PM AOLV/PM EZOLV Sets a maximum of 12 monitors as user monitors. This parameter is only available when using an LCD keypad.	o1-24: 101 o1-25: 102 o1-26: 103 o1-27 to o1-35: 0 (0, 101 - 999)

These parameters save the monitor items selected by the LCD keypad [Custom Monitor].

Note:
- You can show a maximum of three selected monitors on one LCD keypad screen.
  - –When you select only one monitor, the text size of this monitor increases. For example, when *o1-25 to o1-35 = 0*, the text size of the monitor saved in o1-24 increases.
  - –When you select two monitors, the text size of these monitors increase.
  - –When you select four or more monitors, the fourth monitor and all additional monitors are shown on the next screens.
- Monitors selected with *o1-24* to *o1-26* can be displayed as a bar graph, analog gauge, or trend plot.
  - –Bar graph display: 3 monitors maximum
    Select with *o1-24*, *o1-25*, and *o1-26*.
  - –Analog gauge display: 1 monitor
    Select with *o1-24*.
  - –Trend plot display: 2 monitors
    Select with *o1-24* and *o1-25*.
- You can only set parameters *o1-24* to *o1-26* with analog output monitors.
- You can set all monitors to parameters *o1-27* to *o1-35*.

■ o1-36: LCD Backlight Brightness

No. (Hex.)	Name	Description	Default (Range)
o1-36 (11B9) RUN	LCD Backlight Brightness	V/f OLV OLV/PM AOLV/PM EZOLV Sets the intensity of the LCD keypad backlight.	3 (1 - 5)

When you decrease the setting value, the intensity of the backlight decreases.

■ o1-37: LCD Blight ON/OFF Selection

No. (Hex.)	Name	Description	Default (Range)
o1-37 (11BA) RUN	LCD Blight ON/OFF Selection	V/f OLV OLV/PM AOLV/PM EZOLV Sets the automatic shut off function for the LCD backlight.	1 (0, 1)

Note:

Use *o1-36 [LCD Backlight Brightness]* to adjust the intensity of the LCD backlight.

0 : OFF

1 : ON

Enables the automatic shut off function. The backlight will automatically turn off after the time set in *o1-38 [LCD Blight Off-Delay]* is expired.

Note:

When *o1-37 = 1* and the backlight is OFF, the keys other than STOP are disabled.

When the backlight is off, push a key on the keypad to temporarily turn the backlight on. Push any key to start keypad operation, Push RUN to turn the backlight on, then push RUN again to enter a Run command to the drive.

■ o1-38: LCD Blight Off-Delay

No. (Hex.)	Name	Description	Default (Range)
o1-38 (11BB) RUN	LCD Blight Off-Delay	V/f OLV OLV/PM AOLV/PM EZOLV Sets the time until the LCD backlight automatically turns off.	60 s (10 - 300 s)

When *o1-37 = 1 [LCD Blight ON/OFF Selection = ON]*, the backlight will automatically turn off after the time set in *o1-38* expires.

When the backlight is off, push a key on the keypad to temporarily turn the backlight on. After the backlight turns on, it will turn off automatically after the time set in *o1-38* is expired.

■ o1-39: Show Init Screen

No. (Hex.)	Name	Description	Default (Range)
o1-39 (11BC) RUN	Show Init Screen	V/f OLV OLV/PM AOLV/PM EZOLV Sets the function to show the LCD keypad initial setup screen each time the drive is energized. This parameter is only available when using an LCD keypad.	1 (0, 1)

The initial setup screen shows a menu where you can select the display language, set the date, time, and other basic settings. When you set this parameter to 0, the drive will not show this screen each time you energize the drive.

0 : No

The drive will not show the initial setup display screen each time you energize the drive. The drive will show the Home screen.

1 : Yes

When you input the Run command before you energize the drive or when the you turn on the Run command while the drive shows the initial setup screen, the drive will replace the initial setup screen with the Home screen.

■ o1-40: Home Screen Selection Mode

No. (Hex.)	Name	Description	Default (Range)
o1-40 (11BD) RUN	Home Screen Selection Mode	V/f OLV OLV/PM AOLV/PM EZOLV Sets the monitor display mode for the Home screen. This parameter is only available when using an LCD keypad.	0 (0, 10 - 12)

0 : Monitors
10 : Bar Graph
11 : Analog Gauge
12 : Trend Plot

■ o1-41: 1stMon Area Selection

No. (Hex.)	Name	Description	Default (Range)
o1-41 (11C1) RUN	1stMon Area Selection	V/f OLV OLV/PM AOLV/PM EZOLV Sets the horizontal range used to display the monitor set in *o1-24 [Cust.Monitor 1]* as a bar graph. This parameter is only available when using an LCD keypad.	0 (0, 1)

0 : +/- Area (- o1-42 - o1-42)
1 : + Area (0 - o1-42)

■ o1-42: 1stMon Area Setting

No. (Hex.)	Name	Description	Default (Range)
o1-42 (11C2) RUN	1stMon Area Setting	V/f OLV OLV/PM AOLV/PM EZOLV Sets the horizontal axis value used to display the monitor set in *o1-24 [Cust.Monitor 1]* as a bar graph. This parameter is only available when using an LCD keypad.	100.0% (0.0 - 100.0%)

■ o1-43: 2ndMon Area Selection

No. (Hex.)	Name	Description	Default (Range)
o1-43 (11C3) RUN	2ndMon Area Selection	V/f OLV OLV/PM AOLV/PM EZOLV Selects the horizontal range used to display the monitor set in *o1-25 [Cust.Monitor 2]* as a bar graph. This parameter is only available when using an LCD keypad.	0 (0, 1)

0 : + - Area (- o1-44 - o1-44)
1 : + Area (0 - o1-44)

■ o1-44: 2ndMon Area Setting

No. (Hex.)	Name	Description	Default (Range)
o1-44 (11C4) RUN	2ndMon Area Setting	V/f OLV OLV/PM AOLV/PM EZOLV Sets the horizontal axis value used to display the monitor set in *o1-25 [Cust.Monitor 2]* as a bar graph. This parameter is only available when using an LCD keypad.	100.0% (0.0 - 100.0%)

■ o1-45: 3rdMon Area Selection

No. (Hex.)	Name	Description	Default (Range)
o1-45 (11C5) RUN	3rdMon Area Selection	V/f OLV OLV/PM AOLV/PM EZOLV Sets the horizontal range used to display the monitor set in *o1-26 [Cust.Monitor 3]* as a bar graph. This parameter is only available when using an LCD keypad.	0 (0, 1)

0 : + - Area (- o1-46 - o1-46)
1 : + Area (0 - o1-46)

■ o1-46: 3rdMon Area Setting

No. (Hex.)	Name	Description	Default (Range)
o1-46 (11C6) RUN	3rdMon Area Setting	V/f OLV OLV/PM AOLV/PM EZOLV Sets the horizontal axis value used to display the monitor set in *o1-26 [Cust.Monitor 3]* as a bar graph. This parameter is only available when using an LCD keypad.	100.0% (0.0 - 100.0%)

■ o1-47: Trend Plot 1 Min Scale Value

No. (Hex.)	Name	Description	Default (Range)
o1-47 (11C7) RUN	Trend Plot 1 Min Scale Value	V/f OLV OLV/PM AOLV/PM EZOLV Sets the horizontal axis minimum value used to display the monitor set in *o1-24 [Cust.Monitor 1]* as a trend plot. This parameter is only available when using an LCD keypad.	-100.0% (-300.0 - +300.0%)

■ o1-48: Trend Plot 1 Max Scale Value

No. (Hex.)	Name	Description	Default (Range)
o1-48 (11C8) RUN	Trend Plot 1 Max Scale Value	V/f OLV OLV/PM AOLV/PM EZOLV Sets the horizontal axis maximum value used to display the monitor set in *o1-24 [Cust.Monitor 1]* as a trend plot. This parameter is only available when using an LCD keypad.	100.0% (-300.0 - +300.0%)

■ o1-49: Trend Plot 2 Min Scale Value

No. (Hex.)	Name	Description	Default (Range)
o1-49 (11C9) RUN	Trend Plot 2 Min Scale Value	V/f OLV OLV/PM AOLV/PM EZOLV Sets the horizontal axis minimum value used to display the monitor set in *o1-25 [Cust.Monitor 2]* as a trend plot. This parameter is only available when using an LCD keypad.	-100.0% (-300.0 - +300.0%)

■ o1-50: Trend Plot 2 Max Scale Value

No. (Hex.)	Name	Description	Default (Range)
o1-50 (11CA) RUN	Trend Plot 2 Max Scale Value	V/f OLV OLV/PM AOLV/PM EZOLV Sets the horizontal axis maximum value used to display the monitor set in *o1-25 [Cust.Monitor 2]* as a trend plot. This parameter is only available when using an LCD keypad.	100.0% (-300.0 - +300.0%)

■ o1-51: Trend Plot Time Scale Setting

No. (Hex.)	Name	Description	Default (Range)
o1-51 (11CB) RUN	Trend Plot Time Scale Setting	V/f OLV OLV/PM AOLV/PM EZOLV Sets the time scale (horizontal axis) to display the trend plot. When you change this setting, the drive automatically adjusts the data sampling time. This parameter is only available when using an LCD keypad.	300 s (1 - 3600 s)

■ o1-55: AnGauge Area Selection

No. (Hex.)	Name	Description	Default (Range)
o1-55 (11EE) RUN	AnGauge Area Selection	V/f OLV OLV/PM AOLV/PM EZOLV Sets the range used to display the monitor set in *o1-24 [Custom Monitor 1]* as an analog gauge. This parameter is only available when using an LCD keypad.	1 (0, 1)

0 : + - Area (- o1-56 - o1-56)

1 : + Area (0 - o1-56)

■ o1-56: AnGauge Area Setting

No. (Hex.)	Name	Description	Default (Range)
o1-56 (11EF) RUN	AnGauge Area Setting	V/f OLV OLV/PM AOLV/PM EZOLV Sets the value used to display the monitor set in *o1-24 [Cust.Monitor 1]* as an analog meter. This parameter is only available when using an LCD keypad.	100.0% (0.0 - 100.0%)

■ o1-58: Mot Capacity Unit

No. (Hex.)	Name	Description	Default (Range)
o1-58 (3125)	Mot Capacity Unit	V/f OLV OLV/PM AOLV/PM EZOLV Sets the setting unit for parameters that set the motor rated power.	0 (0, 1)

The drive shows these parameter values in the set units:

- E2-11 [Motor Rated Power (kW)]
- E4-11 [M2 Rated Power (kW)]
- E5-02 [PM Mot Rated Power (kW)]
- E9-07 [Motor Rated Power (kW)]
- T1-02 [Motor Rated Power]
- T2-04 [PMMot Rated Power]
- T4-08 [Motor Rated Capacity]

0 : kW

Shows the motor output in kW units.

1 : HP

Shows the motor output in HP units.

◆ o2: KEYPAD OPERATION

■ o2-01: LO/RE Key Selection of Function

No. (Hex.)	Name	Description	Default (Range)
o2-01 (0505)	LO/RE Key Selection of Function	V/f OLV OLV/PM AOLV/PM EZOLV Sets the function that lets you use LO/RE to switch between LOCAL and REMOTE Modes.	1 (0, 1)

0 : Disabled

You cannot use LO/RE to switch between LOCAL and REMOTE Modes.

1 : Enabled

You can use LO/RE to switch between LOCAL and REMOTE Modes when the drive is stopped. When LOCAL Mode is selected, LO/RE on the keypad will come on.

WARNING! *Sudden Movement Hazard. If you change the control source when b1-07 = 2 [LO/RE Run Selection = Accept RUN], the drive can start suddenly. Before you change the control source, remove all personnel from the area around the drive, motor, and load. Sudden starts can cause serious injury or death.*

WARNING! *Sudden Movement Hazard. Fully examine all mechanical and electrical connections before you change o2-01 [LO/RE Key Selection of Function] or b1-07 [LO/RE Run Selection]. Sudden starts can cause serious injury or death. If b1-07 = 2 [LO/RE Run Selection = Accept RUN] and there is an active Run command when you switch from LOCAL to REMOTE Mode, the drive can start suddenly.*

Table 12.56 Function Settings with o2-01 and b1-07

LO/RE Function Selection	LOCAL/REMOTE Run Selection	Switching from LOCAL Mode to REMOTE Mode	Switching from REMOTE Mode to LOCAL Mode
o2-01 = 0 [Disabled]	b1-07 = 1 [Cycle RUN]	The drive will not switch modes.	The drive will not switch modes.
	b1-07 = 2 [Accept RUN]		
o2-01 = 1 [Enabled]	b1-07 = 1 [Cycle RUN]	The drive will not start operating although the Run command is active. When you set Run command to active again, the drive will start to run.	The drive cannot operate because the Run command is not enabled.
	b1-07 = 2 [Accept RUN]	When the Run command is active, the drive will start to run immediately when the mode switches from LOCAL to REMOTE.	The drive cannot operate because the Run command is not enabled.

■ o2-02: STOP Key Selection of Function

No. (Hex.)	Name	Description	Default (Setting Range)
o2-02 (0506)	STOP Key Selection of Function	V/f OLV OLV/PM AOLV/PM EZOLV Sets the function to use STOP on the keypad to stop the drive when the Run command source for the drive is REMOTE (external) and not assigned to the keypad.	1 (0, 1)

0 : Disabled

1 : Enabled

STOP stays enabled when the Run command source has not been assigned to the keypad.

To start the drive again after you push STOP to stop operation, turn the external Run command OFF and ON again.

■ o2-03: UserPar Set Default Values

No. (Hex.)	Name	Description	Default (Range)
o2-03 (0507)	UserPar Set Default Values	V/f OLV OLV/PM AOLV/PM EZOLV Sets the function to keep the settings of changed parameters as user parameter defaults to use during initialization.	0 (0 - 2)

When you set *o2-03 = 1 [Set defaults]*, the drive saves changed parameter settings as user parameter setting values in a part of the memory that is isolated from drive parameters.

When you set *A1-03 = 1110 [Init Parameters = User / Solution Initialization]* to initialize the drive, the drive resets the internal parameter setting values to those user parameter setting values.

0 : No change

1 : Set defaults

Saves changed parameter setting values as user default settings.

Set *o2-03 = 1* then push ↵ to save the user parameter setting values. After the drive saves the setting value, *o2-03* automatically resets to *0*.

2 : Clear all

Deletes all of the saved user parameter setting values.

Set *o2-03 = 2* then push ↵ to clear the user parameter setting values. The drive will automatically reset *o2-03* to *0*. If you delete the user parameter setting values, you cannot set *A1-03 = 1110* to initialize parameters.

■ o2-04: Drive KVA Selection

No. (Hex.)	Name	Description	Default (Setting Range)
o2-04 (0508)	Drive KVA Selection	V/f OLV OLV/PM AOLV/PM EZOLV Sets the Drive Model code. Set this parameter after replacing the control board.	Determined by the drive (-)

NOTICE: *Set o2-04 [Drive KVA Selection] correctly. If you set this parameter incorrectly, it will decrease drive performance, cause the protection function to operate incorrectly, and cause damage to the drive.*

Note:

When the setting value of *o2-04* changes, related parameter setting values also change. Refer to *Defaults by Drive Model and Duty Rating ND/HD on page 409* for more information.

These tables list the relation between *o2-04* setting values and drive models.

o2-04 Setting	Drive Model
30	B001
31	B002
32	B004
33	B006
34	B010
35	B012

o2-04 Setting	Drive Model
37	B018
60	2001
61	2002
62	2004
63	2006
64	2008

o2-04 Setting	Drive Model
65	2010
66	2012
67	2018
68	2021
91	2030
92	2042
93	2056
94	2070
95	2082
96	4001
97	4002

o2-04 Setting	Drive Model
99	4004
6A	4005
6B	4007
6D	4009
6E	4012
6F	4018
9A	4023
9C	4031
9D	4038
9E	4044
9F	4060

■ o2-05: LCD FreqRef Mode@Home Screen

No. (Hex.)	Name	Description	Default (Setting Range)
o2-05 (0509)	LCD FreqRef Mode@Home Screen	V/f OLV OLV/PM AOLV/PM EZOLV Sets the function that makes it necessary to push ↵ to use the keypad to change the frequency reference value while in Drive Mode.	0 (0, 1)

0 : Disabled

You must push ↵ to use the keypad to change the frequency reference value.

1 : Enabled

The frequency reference changes when you enter it with the keypad. This then changes the output frequency. It is not necessary to push ↵. The drive keeps the frequency reference for 5 seconds after you use ∧ and ∨ on the keypad to change the frequency reference value.

■ o2-06: Keypad Disconnect Detection

No. (Hex.)	Name	Description	Default (Range)
o2-06 (050A)	Keypad Disconnect Detection	V/f OLV OLV/PM AOLV/PM EZOLV Sets the function that stops the drive if you disconnect the keypad connection cable from the drive or if you damage the cable while the keypad is the Run command source.	0 (0, 1)

This parameter continues to operate if the keypad installed to the drive becomes disconnected.

This parameter is enabled in these conditions:

- When *b1-02 = 0 [Run Comm. Sel 1 = Keypad]* or *b1-16 = 0 [Run Comm. Sel 2 = Keypad]*
- In LOCAL Mode

0 : Disabled

The drive continues operation when it detects a keypad disconnection.

1 : Enabled

The drive stops operation, detects *oPr [Keypad Connection Fault]*, and the motor coasts to stop when the drive detects a keypad disconnection.

■ o2-07: Keypad Dir@Power-Up

No. (Hex.)	Name	Description	Default (Range)
o2-07 (0527)	Keypad Dir@Power-Up	V/f OLV OLV/PM AOLV/PM EZOLV Sets the direction of motor rotation when the drive is energized and the keypad is the Run command source.	0 (0, 1)

This parameter is enabled in these conditions:

- When *b1-02 = 0 [Run Comm. Sel 1 = Keypad]* or *b1-16 = 0 [Run Comm. Sel 2 = Keypad]*
- In LOCAL Mode

0 : Forward

1 : Reverse

■ o2-09: Region Code for Initialization

No. (Hex.)	Name	Description	Default (Range)
o2-09 (050D)	Region Code for Initialization	-	-

■ o2-19: Parameter Write during Uv

No. (Hex.)	Name	Description	Default (Range)
o2-19 (061F) Expert	Parameter Write during Uv	V/f OLV OLV/PM AOLV/PM EZOLV Lets you change parameters during *Uv [Undervoltage]*.	0 (0, 1)

0 : Disable

1 : Enable

■ o2-23: Ext24V Off Warning Display

No. (Hex.)	Name	Description	Default (Setting Range)
o2-23 (11F8) RUN	Ext24V Off Warning Display	V/f OLV OLV/PM AOLV/PM EZOLV Sets the function to give a warning if the backup external 24 V power supply turns off when the main circuit power supply is in operation.	0 (0, 1)

Note:

The drive will not run when it is operating from one 24-V external power supply.

0 : Disabled

The drive does not detect the loss of the 24-V external power supply.

1 : Enabled

The keypad shows the *L24v [Loss of External Power 24 Supply]* indicator if the drive detects the loss of the 24-V external power supply.

Note:

A minor fault signal is not output from *H2-xx = 4 [H2-xx: MFDO Function Select = Alarm]*.

■ o2-26: Ext24V Mode Warning Display

No. (Hex.)	Name	Description	Default (Range)
o2-26 (1563)	Ext24V Mode Warning Display	V/f OLV OLV/PM AOLV/PM EZOLV When you connect a backup external 24 V power supply, this parameter sets the function to trigger an alarm when the main circuit power supply voltage decreases.	0 (0, 1)

0 : Disabled

The drive will not detect *EP24v [External Power 24V Supply]* if the main circuit power supply voltage decreases. The [Ready] light flashes quickly to identify that drive operation is not possible.

1 : Enabled

The drive detects *EP24v* when the main circuit power supply voltage decreases.

Note:

The minor fault signal is not output from *H2-xx = 4 [H2-xx: MFDO Function Select = Alarm]*.

■ o2-27: BLE Disconn.Selection@BLE Ctrl

No. (Hex.)	Name	Description	Default (Range)
o2-27 (1565)	BLE Disconn. Selection@BLE Ctrl	V/f OLV OLV/PM AOLV/PM EZOLV Sets drive operation if the Bluetooth device is disconnected when you operate the drive in Bluetooth Mode.	3 (0 - 4)

0 : Ramp->Stop

1 : Coast->Stop
2 : Fast Stop (C1-09)
3 : Alarm Only
4 : No Alarm Display

◆ o3: COPY FUNCTION

o3 parameters set the operation of the parameter backup function.

■ o3-01: COPY Keypad Selection of Mode

No. (Hex.)	Name	Description	Default (Range)
o3-01 (0515)	COPY Keypad Selection of Mode	V/f OLV OLV/PM AOLV/PM EZOLV Sets the function that saves and copies drive parameters to a different drive with the keypad.	0 (0 - 4)

0 : Copy Select
1 : Bck (Drive->OPE)
The parameter setting values are read from the drive and saved in the keypad.
2 : Res (OPE->Drive)
Copies the parameter setting values saved in the keypad to a different drive.
3 : Verify (Check)
Makes sure that the parameter setting values in the drive agree with the parameters saved in the keypad.
4 : Del (Clear OPE Memory)
Deletes the parameter setting values saved in the keypad.

■ o3-02: COPY Allow Selection

No. (Hex.)	Name	Description	Default (Range)
o3-02 (0516)	COPY Allow Selection	V/f OLV OLV/PM AOLV/PM EZOLV Sets the copy function when *o3-01 = 1 [COPY Keypad Selection of Mode = Bck (Drive->OPE)]*.	0 (0, 1)

Note:
When you select [Parameter Backup] on the keypad menu screen to do the backup function, the drive automatically sets *o3-02 = 1*.

0 : Disabled
1 : Enabled

■ o3-04: COPY Memory Selection

No. (Hex.)	Name	Description	Default (Range)
o3-04 (0B3E)	COPY Memory Selection	V/f OLV OLV/PM AOLV/PM EZOLV Sets the storage location for drive parameters when you back up and restore parameters. This parameter is only available when using an LCD keypad.	0 (0 - 3)

You can use the LCD keypad to make a maximum of 4 parameter backup sets.
0 : Memory 1
1 : Memory 2
2 : Memory 3
3 : Memory 4

■ o3-05: COPY Items Selection

No. (Hex.)	Name	Description	Default (Range)
o3-05 (0BDA)	COPY Items Selection	V/f OLV OLV/PM AOLV/PM EZOLV Sets which parameters are backed up, restored, and referenced. This parameter is only available when using an LCD keypad.	0 (0, 1)

0 : Std
1 : Std+Solution

Note:
- Parameters *[q: Q2PACK PARAMETERS]* and *rx-xx [r: Q2PACK JOINTS]* show when *A1-07 = 1 or 2 [Q2pack Enable = Enable Q2pack or With DI]*.
- The password for Q2pack PC software is necessary to back up *qx-xx* and *rx-xx*. If you enter an incorrect password, the drive detects *PWEr [Q2pack Password Mismatch]*.

■ o3-06: AutoBackup Selection

No. (Hex.)	Name	Description	Default (Range)
o3-06 (0BDE)	AutoBackup Selection	V/f OLV OLV/PM AOLV/PM EZOLV Sets the function that automatically backs up parameters. This parameter is only available when using an LCD keypad.	1 (0, 1)

When you connect the drive and keypad, parameters set to the drive are automatically backed up to the keypad as specified by the setting of parameters *o3-06* and *o3-07*.

0 : Disabled

1 : Enabled

Note:

When you replace the LCD keypad then energize the drive, the keypad shows the restore operation screen automatically to restore the drive configuration with the parameters backed up to the LCD keypad. If you connect an LCD keypad that does not have parameter backup data, the keypad will not show the restore operation screen.

■ o3-07: AutoBackup Lapse

No. (Hex.)	Name	Description	Default (Range)
o3-07 (0BDF)	AutoBackup Lapse	V/f OLV OLV/PM AOLV/PM EZOLV Sets the interval at which the automatic parameter backup function saves parameters from the drive to the keypad.	2 (1 - 4)

The drive saves parameter settings to the keypad at these times:

1. After you energize the drive and the auto backup period passes.
2. When you use ROM enter or the keypad to change parameters, the drive saves those changes in the drive, waits for the auto backup period to pass, then saves those parameters in the keypad.

Note:

The drive can write data to the keypad a maximum of 100,000 times. If you write data to the keypad more than 100,000 times, you must replace the keypad.

1 : 10 minutes

2 : 30 minutes

3 : 60 minutes

4 : 12 hours

◆ o4: MAINTENANCE MONITORS

o4 parameters set the expected service life to help you know when to replace parts. The drive will show an alarm to tell you when the replacement part interval is near.

■ o4-01: Cum.Oper TimeSetting

No. (Hex.)	Name	Description	Default (Range)
o4-01 (050B)	Cum.Oper TimeSetting	V/f OLV OLV/PM AOLV/PM EZOLV Sets the initial value of the cumulative drive operation time in 10-hour units.	0 h (0 - 9999 h)

When you select *o4-01* on the keypad, it will show the current value of *U4-01* in units of 10 hours (h). When you change the setting of *o4-01* through the monitor, the *U4-01* count starts again as specified by the setting of *o4-01*.

Note:

Set this parameter in 10-hour (h) units. When *o4-01 = 30*, *U4-01 [Cumulative OpeTime] = 300 h*.

■ o4-02: Cum.Oper TimeSelect

No. (Hex.)	Name	Description	Default (Range)
o4-02 (050C)	Cum.Oper TimeSelect	V/f OLV OLV/PM AOLV/PM EZOLV Sets the condition that counts the cumulative operation time.	1 (1, 2)

1 : Log Power-On Time

Counts the time from when the drive is energized to when it is de-energized.

2 : Log Run Time

Counts the time that the drive outputs voltage.

■ o4-03: Fan.Oper Setting

No. (Hex.)	Name	Description	Default (Range)
o4-03 (050E)	Fan.Oper Setting	V/f OLV OLV/PM AOLV/PM EZOLV Sets the value from which to start the cumulative drive cooling fan operation time in 10-hour units.	0 h (0 - 9999 h)

Use monitor *U4-03 [Fan Oper.Time]* to view the total operation time of the cooling fan. When you replace a cooling fan, set *o4-03 = 0* to reset *U4-03*. Select *o4-03* on the keypad to show the current value of *U4-03* in 10-hour (h) units. If you use the monitor to change *o4-03*, the recount of *U4-03* starts with the *o4-03* setting.

The drive sets *o4-03* in 10-hour (h) units. When *o4-03 = 30*, *U4-03 [Fan Oper.Time]* will show “300 h”.

■ o4-05: Cap.Maint.Setting

No. (Hex.)	Name	Description	Default (Range)
o4-05 (051D)	Cap.Maint.Setting	V/f OLV OLV/PM AOLV/PM EZOLV Sets the *U4-05 [Capacitor Maintenance]* monitor value.	0% (0 - 150%)

When you replace a drive, set *o4-05 = 0* to reset *U4-05*. When the *o4-05* setting changes, the count of *U4-05* starts again as specified by the setting of *o4-05*. After you complete the configuration, *o4-05* automatically resets to *0*.

Note:

The maintenance period changes for different operating environments.

■ o4-07: PreChgRly Preset Maintenance Cnt

No. (Hex.)	Name	Description	Default (Range)
o4-07 (0523)	PreChgRly Preset Maintenance Cnt	V/f OLV OLV/PM AOLV/PM EZOLV Sets the *U4-06 [SoftChgRelay Maint]* monitor value.	0% (0 - 150%)

When you replace a drive, set *o4-07 = 0* to reset *U4-06*. When the *o4-07* setting changes, the count of *U4-06* starts again as specified by the setting of *o4-07*. After you complete the configuration, *o4-07* automatically resets to *0*.

Note:

The maintenance period changes for different operating environments.

■ o4-09: IGBT Preset Maintenance Cnt

No. (Hex.)	Name	Description	Default (Range)
o4-09 (0525)	IGBT Preset Maintenance Cnt	V/f OLV OLV/PM AOLV/PM EZOLV Sets the *U4-07 [IGBT Maintenance]* monitor value.	0% (0 - 150%)

When you replace a drive, set *o4-09 = 0* to reset *U4-07*. When the *o4-09* setting changes, the count of *U4-07* starts again as specified by the setting of *o4-09*. After you complete the configuration, *o4-09* automatically resets to *0*.

Note:

The maintenance period changes for different operating environments.

■ o4-11: Flt.History Initialization

No. (Hex.)	Name	Description	Default (Range)
o4-11 (0510)	Flt.History Initialization	V/f OLV OLV/PM AOLV/PM EZOLV Resets the records of Monitors *U2: FAULT* and *U3: FAULT HISTORY*.	0 (0, 1)

Note:
When you initialize the drive with *A1-03 [Init Parameters]*, the drive will not reset the records for *U2-xx* and *U3-xx*.

0 : No Reset

Keeps the records of Monitors *U2-xx* and *U3-xx*.

1 : Reset

Resets the records for Monitors *U2-xx* and *U3-xx*. After the reset, the drive automatically resets *o4-11* to *0*.

■ o4-12: kWh Monitor Initialization

No. (Hex.)	Name	Description	Default (Range)
o4-12 (0512)	kWh Monitor Initialization	V/f OLV OLV/PM AOLV/PM EZOLV Resets the monitor values for *U4-10 [kWh Lower 4Digits]* and *U4-11 [kWh Upper 5Digits]*.	0 (0, 1)

Note:
When you initialize the drive with *A1-03 [Init Parameters]*, the drive will not reset *U4-10* and *U4-11*.

0 : No Reset

Keeps the monitor values for *U4-10* and *U4-11*.

1 : Reset

Resets the values of *U4-10* and *U4-11*. After the reset, the drive automatically resets *o4-12* to *0*.

■ o4-13: NumOfRunCom Init Counter

No. (Hex.)	Name	Description	Default (Range)
o4-13 (0528)	NumOfRunCom Init Counter	V/f OLV OLV/PM AOLV/PM EZOLV Resets the monitor values for *U4-02 [Num of Run Commands]*, *U4-24 [No of Travels(L)]*, and *U4-25 [No of Travels(H)]*.	0 (0, 1)

0 : No Reset

Keeps the monitor values for *U4-02*, *U4-24, and U4-25*.

1 : Reset

Resets the values of *U4-02*, *U4-24*, and *U4-25*. After the reset, the drive automatically resets *o4-13* to *0*.

■ o4-22: Time Format

No. (Hex.)	Name	Description	Default (Range)
o4-22 (154F) RUN	Time Format	V/f OLV OLV/PM AOLV/PM EZOLV Sets the time display format. This parameter is only available when using an LCD keypad.	0 (0 - 2)

Sets the display of the time shown in the upper-left of the LCD keypad screen.

0 : 24 Hour Clock

1 : 12 Hour Clock

2 : 12 Hour JP Clock

■ o4-23: Date Format

No. (Hex.)	Name	Description	Default (Range)
o4-23 (1550) RUN	Date Format	V/f OLV OLV/PM AOLV/PM EZOLV Sets the date display format. This parameter is only available when using an LCD keypad.	0 (0 - 2)

Sets the date format that the drive uses for the fault history and other records.

0 : YYYY/MM/DD
1 : DD/MM/YYYY
2 : MM/DD/YYYY

■ o4-24: bAT Detection Selection

No. (Hex.)	Name	Description	Default (Range)
o4-24 (310F) RUN	bAT Detection Selection	V/f OLV OLV/PM AOLV/PM EZOLV Sets the operation when the drive detects *bAT [Keypad Battery Low Voltage]* and *TiM [Keypad Time Not Set]*. This parameter is only available when you use an LCD keypad.	0 (0 - 2)

0 : Disabled
The drive will not detect *bAT* or *TiM*.

1 : Enable (Alarm Detected)
The keypad shows *bAT* or *TiM* and the drive continues operation. The output terminal set to *Alarm [H2-01 to H2-03 = 4]* activates.

2 : Enable (Fault Detected)
The output turns off and the motor coasts to stop. The output terminal set for *Fault [H2-01 to H2-03 = 3]* activates.

◆ o5: DATA LOGGER

The data log function saves drive status information as a CSV file in the micro SD memory card in the keypad. *Monitors Ux-xx* are the source of data log information. You can record a maximum of 10 monitors.

Change the LCD keypad screen from the main menu to the Diagnostic Tools screen and select the data log function. Set the number of the monitor to record and the sampling time, then start to record the data log.

Table 12.57 Setting Parameters for Data Log Items

No.	Name	Default	Data Log Monitors
o5-03	Log Mon Data 1	101	*U1-01 [Frequency Reference]*
o5-04	Log Mon Data 2	102	*U1-02 [Output Frequency]*
o5-05	Log Mon Data 3	103	*U1-03 [Output Current]*
o5-06	Log Mon Data 4	107	*U1-07 [DC Bus Voltage]*
o5-07	Log Mon Data 5	108	*U1-08 [Output Power]*
o5-08	Log Mon Data 6	000	Not selected
o5-09	Log Mon Data 7	000	Not selected
o5-10	Log Mon Data 8	000	Not selected
o5-11	Log Mon Data 9	000	Not selected
o5-12	Log Mon Data 10	000	Not selected

Note:
- Failure to obey can cause the log function to fail after you restore power or connect the keypad. Do not de-energize the drive or disconnect the keypad from the drive during log transfer communication.
- You can use a Micro SDHC card a maximum of 32 GB capacity.

■ Log File Specifications

Item	Specification
File storage location	A folder called [Log_File] is created in the root directory of the micro SD card.
Filename	GLOG0xxx.csv **Note:** [xxx] identifies a 3-digit decimal number
Maximum number of files	999 (GLOG0001.csv to GLOG0999.csv)
Character code	ASCII code
Line break code	<CR><LF>

Item	Specification
Separating character	[,] (Commas)
Header Rows	First Row: Drive information including Drive Model, software version, control method, and sampling time Second Row: Log data information including the monitor number, number decimal points, and unit code

■ Log File Configuration

The [Log_Files] folder is created in the root directory of the micro SD card. This is where the log data is stored as CSV files. Log data files are created in this configuration. The number of rows changes when the number of selected monitors change.

First Row	Drive information
Second Row	Log data information
Third Row	Log data 1
:	Log data 2
:	Log data 3
:	:
Last Row	Log data n

First Row: Drive Information

This example shows the data text strings and data generated for the first row of log data.

Example of generated data: 00,0012,160107111230,Q2V,VSVA22010,2,62,1000,000001

No.	Item	Number of Characters	Example	Description
1	Attribute	2	00	[00] shows that the record is a drive information record.
2	File number	4	0012	Generates the [xxx] part (a 3-digit decimal number) of the [GLOG0xxx.csv] filename of the log data in hexadecimal format. Example filename of [GLOG0018.csv]: 018 (Dec.) = 0012 (Hex.)
3	Time stamp *1	12	160107111230	Date file was generated ・ Date: 20YY/MM/DD ・ Time in 24-hour format: HH:MM:SS Example data of [160107111230]: 11:12:30 on January 7, 2016
4	Model	3	Q2V	Drive model information
5	Software number	9	VSVA22010	Drive software number
6	Control method selection	1	2	Setting value (Hex.) of *A1-02 [Control Method]*
7	Drive capacity	2	62	Setting value (Hex.) of *o2-04 [Drive KVA Selection]*
8	Sampling time	5 (maximum)	1000	Setting value (Dec.) of *o5-02 [Log Sample Lapse]* Unit: ms
9	Row number	6	000001	Row number (Hex.) in the data log file

*1 If you do not set the time in the keypad, the text string of [000000000000] is generated to show the time.

Second Row: Log Data Information

This example shows the data text strings and data generated for the second row of log data.

Example of generated data:
01,0012,160107111230,0101,0201,0102,0201,0103,0206,0107,0005,0108,0209,0000,0000,0000,0000,0000,0000,0000,0000,0000,0000,0000,0000,0000,0000,0000,0000,000002

No.	Item	Number of Characters	Description
1	Attribute	2	[01] shows that the record is a log data information record.
2	File number	4	Generates the [xxx] part (a 3-digit decimal number) of the [GLOG0xxx.csv] filename of the log data in hexadecimal format.
3	Time stamp	12	Date file was generated
4	Monitor Number 1 *1	4	Monitor number selected by *o5-03 [Log Mon Data 1]* Ex.: 0101 (Dec.) for *U1-01*

No.	Item	Number of Characters	Description
5	Monitor Unit 1 *2	4	Unit code and number of decimal places used for the monitor selected with *o5-03* Example when *U1-01 = 30.00 Hz*: Number of decimal places = 2, Hz unit code = 01, monitor unit 1 = 0201 (Hex.)
6	Monitor number 2	4	Monitor number (Dec.) selected by *o5-04 [Log Mon Data 2]*
7	Monitor Unit 2	4	Unit code and number of decimal places used for the monitor selected with *o5-04*
:	:	:	:
22	Monitor number 10	4	Monitor number (Dec.) selected by *o5-12 [Log Mon Data 10]*
23	Monitor Unit 10	4	Unit code and number of decimal places used for the monitor selected with *o5-12*
24 - 27	Reserved	4	-
28	Row number	6	Row number (Hex.) in the data log file

*1 If there is no data log monitor selected, the text string of [0000] is generated.
*2 Refer to Table 12.58 for information about unit codes.

Table 12.58 Unit Codes

Unit Code (Hex.)	Unit	Unit Code (Hex.)	Unit	Unit Code (Hex.)	Unit	Unit Code (Hex.)	Unit
00	–	08	PPR	10	H	18	0H
01	Hz	09	kW	11	V	19	–
02	RPM	0A	Ω	12	us	1A	–
03	%	0B	ms	13	min	1B	–
04	VAC	0C	kHz	14	°C	1C	–
05	VDC	0D	PSI	15	W	1D	–
06	A	0E	MPM	16	kWH	1E	–
07	sec	0F	FPM	17	MWH	1F	–

Third and Subsequent Rows: Log Data

This example shows the data text strings and data generated for the third row of log data.

Example of generated data:
02,0012,160107111239,1770,1770,00BE,0118,0028,0000,0000,0000,0000,0000,0000,0000,00000C

No.	Item	Number of Characters	Description
1	Attribute	2	[02] shows that the record is a monitor data record.
2	File number	4	Generates the [xxx] part (a 3-digit decimal number) of the [GLOG0xxx.csv] filename of the log data in hexadecimal format.
3	Time stamp	12	Data log data was retrieved (YYMMDDHHMMSS)
4	Log Monitor Data 1	4	Log monitor data (Hex.) of the monitor selected with *o5-03 [Log Mon Data 1]*
5	Log Monitor Data 2	4	Log monitor data (Hex.) of the monitor selected with *o5-04 [Log Mon Data 2]*
:	:	:	:
13	Log Monitor Data 10	4	Log monitor data (Hex.) of the monitor selected with *o5-12 [Log Mon Data 10]*
14	Reserved	4	-
15	Encoding data	4	Log Monitor Data 1 to 10 Code Data (Hex.) Bits 0 through 9 show the encoding of log monitor data 1 1 through 10. A bit value of 1 shows that the data represents a negative value. (Log monitor data 1 through 10 is absolute value data without encoding) Example when log monitor data 2, 5, and 8 show negative values: Bits 1, 4, and 7 have values of 1, and the encoding data = 0010010010 (Bin.) = 0092 (Hex.)
16	Row number	6	Row number (Hex.) in the data log file

■ o5-01: Log Start Selection

No. (Hex.)	Name	Description	Default (Range)
o5-01 (1551) RUN	Log Start Selection	V/f OLV OLV/PM AOLV/PM EZOLV Sets the data log function. This parameter is only available when using an LCD keypad.	0 (0 - 1)

0 : OFF

Stops the data log.

1 : ON (Data Logging)

Starts the data log as specified by the sampling cycle set in *o5-02 [Log Sample Lapse]*.

■ o5-02: Log Sample Lapse

No. (Hex.)	Name	Description	Default (Range)
o5-02 (1552) RUN	Log Sample Lapse	V/f OLV OLV/PM AOLV/PM EZOLV Sets the data log sampling cycle. This parameter is only available when using an LCD keypad.	1000 ms (100 - 60000 ms)

■ o5-03: Log Mon Data 1

No. (Hex.)	Name	Description	Default (Range)
o5-03 (1553) RUN	Log Mon Data 1	V/f OLV OLV/PM AOLV/PM EZOLV Sets the data log monitor. This parameter is only available when using an LCD keypad.	101 (000, 101 - 999)

Note:

Set the number of the *U monitor* to record the data log.

For example, to show *U1-01 [PID Feedback]*, set *o5-03 = 101*. When it is not necessary to set data log monitors, set this parameter to *000*. You cannot set *[U2: FAULT]* or *[U3: FAULT HISTORY]*.

■ o5-04: Log Mon Data 2

No. (Hex.)	Name	Description	Default (Range)
o5-04 (1554) RUN	Log Mon Data 2	V/f OLV OLV/PM AOLV/PM EZOLV Sets the data log monitor. This parameter is only available when using an LCD keypad.	102 (000, 101 - 999)

Note:

Set the *U monitor* number you will log.

For example, to show *U1-02 [Output Frequency]*, set *o5-04 = 102*. When it is not necessary to set data log monitor, set this parameter to *000*.

■ o5-05: Log Mon Data 3

No. (Hex.)	Name	Description	Default (Range)
o5-05 (1555) RUN	Log Mon Data 3	V/f OLV OLV/PM AOLV/PM EZOLV Sets the data log monitor. This parameter is only available when using an LCD keypad.	103 (000, 101 - 999)

Note:

Sets the number of the *U monitor* you will log.

For example, to show *U1-03 [Output Current]*, set *o5-05 = 103*. When it is not necessary to set data log monitors, set this parameter to *000*. You cannot select *[U2: FAULT]* or *[U3: FAULT HISTORY]*.

■ o5-06: Log Mon Data 4

No. (Hex.)	Name	Description	Default (Range)
o5-06 (1556) RUN	Log Mon Data 4	V/f OLV OLV/PM AOLV/PM EZOLV Sets the data log monitor. This parameter is only available when using an LCD keypad.	107 (000, 101 - 999)

Note:

Sets the number of the *U monitor* you will log.

For example, to show *U1-07 [DC Bus Voltage]*, set *o5-06 = 107*. When it is not necessary to set data log monitors, set this parameter to *000*. You cannot select *[U2: FAULT]* or *[U3: FAULT HISTORY]*.

■ o5-07: Log Mon Data 5

No. (Hex.)	Name	Description	Default (Range)
o5-07 (1557) RUN	Log Mon Data 5	V/f OLV OLV/PM AOLV/PM EZOLV Sets the data log monitor. This parameter is only available when using an LCD keypad.	108 (000, 101 - 999)

Note:

Sets the number of the *U monitor* you will log.

For example, to show *U1-08 [Output Power]*, set *o5-07 = 108*. When it is not necessary to set data log monitors, set this parameter to *000*. You cannot select *[U2: FAULT]* or *[U3: FAULT HISTORY]*.

■ o5-08: Log Mon Data 6

No. (Hex.)	Name	Description	Default (Setting Range)
o5-08 (1558) RUN	Log Mon Data 6	V/f OLV OLV/PM AOLV/PM EZOLV Sets the data log monitor. This parameter is only available when using an LCD keypad.	000 (000, 101 - 999)

Note:

Set the *U monitor* number you want to log.

For example, to display *U1-01 [Frequency Reference]*, set *o5-08 = 101*. When it is not necessary to set a data log monitor, set this parameter to *000*. You cannot select *[U2: FAULT]* or *[U3: FAULT HISTORY]*.

■ o5-09: Log Mon Data 7

No. (Hex.)	Name	Description	Default (Range)
o5-09 (1559) RUN	Log Mon Data 7	V/f OLV OLV/PM AOLV/PM EZOLV Sets the data log monitor. This parameter is only available when using an LCD keypad.	000 (000, 101 - 999)

Note:

Set the *U monitor* number you will log.

For example, to show *U1-01 [Frequency Reference]*, set *o5-09 = 101*. When it is not necessary to set data log monitor, set this parameter to *000*.

■ o5-10: Log Mon Data 8

No. (Hex.)	Name	Description	Default (Range)
o5-10 (155A) RUN	Log Mon Data 8	V/f OLV OLV/PM AOLV/PM EZOLV Sets the data log monitor. This parameter is only available when using an LCD keypad.	000 (000, 101 - 999)

Note:

Sets the number of the *U monitor* you will log.

For example, to show *U1-01 [Log Mon Data 8]*, set *o5-10 = 101*. When it is not necessary to set data log monitors, set this parameter to *000*. You cannot select *[U2: FAULT]* or *[U3: FAULT HISTORY]*.

■ o5-11: Log Mon Data 9

No. (Hex.)	Name	Description	Default (Range)
o5-11 (155B) RUN	Log Mon Data 9	V/f OLV OLV/PM AOLV/PM EZOLV Sets the data log monitor. This parameter is only available when using an LCD keypad.	000 (000, 101 - 999)

Note:

Sets the number of the *U monitor* you will log.

For example, to show *U1-01 [Frequency Reference]*, set *o5-11 = 101*. When it is not necessary to set data log monitors, set this parameter to *000*. You cannot select *[U2: FAULT]* or *[U3: FAULT HISTORY]*.

■ o5-12: Log Mon Data 10

No. (Hex.)	Name	Description	Default (Range)
o5-12 (155C) RUN	Log Mon Data 10	V/f OLV **OLV/PM** AOLV/PM EZOLV Sets the data log monitor. This parameter is only available when using an LCD keypad.	000 (000, 101 - 999)

Note:

Sets the number of the *U monitor* you will log.

For example, to show *U1-01 [Frequency Reference]*, set *o5-12 = 101*. When it is not necessary to set data log monitors, set this parameter to *000*. You cannot select *[U2: FAULT]* or *[U3: FAULT HISTORY]*.

12.11 T: AUTOTUNING

Numbers identifying the *T parameters* are displayed when an LED keypad is used. The names of the parameters are displayed on the LCD screen of the LCD keypad. Set the following.

- Induction Motor Auto-Tuning
- PM Motor Auto-Tuning
- ASR and Inertia Tuning

◆ T0: TUNE MODE

■ T0-00: Tune Mode Selection

When your control method supports Control Tuning, set *T0-00* first. Then, set *T1-00 [Mot1/Mot2 Selection]* to select the motor you will tune. Then, set the tuning mode in *T2-01 [PM AutoTune Mode Select]* or *T3-00 [Control Loop Tune Selection]*.

No. (Hex.)	Name	Description	Default (Range)
T0-00 (1197)	Tune Mode Selection	V/f OLV OLV/PM AOLV/PM EZOLV Sets the type of Auto-Tuning.	0 (0, 1)

0 : Motor Parameter Tuning

1 : Control Tuning

Note:

The available tuning modes are different for different control methods.

◆ T1: INDUCTION MOTOR

T1 parameters set the Auto-Tuning input data for induction motor tuning.

Note:

- The base frequency of drive dedicated motors and special motors for use with vector control may be lower than the base frequency of general-purpose motors, which is 50 Hz or 60 Hz. In such cases, this lower frequency is used as the value for *E1-06 [Base Frequency]* and *E1-04 [Max Output Frequency]* after Auto-Tuning completes. If the maximum output frequency is too low and causes problems, change the setting of *E1-04* after Auto-Tuning completes.
- The following induction motor parameters are set automatically.
  - *[E1: V/F PARAMETER MOTOR 1]*
  - *[E2: MOTOR 1 PARAMETERS]*
  - *[E3: V/F PARAMETER MOTOR 2]*
  - *[E4: MOTOR 2 PARAMETERS]*

■ T1-00: Mot1/Mot2 Selection

No. (Hex.)	Name	Description	Default (Range)
T1-00 (0700)	Mot1/Mot2 Selection	V/f OLV OLV/PM AOLV/PM EZOLV Sets which motor to tune when motor 1/2 switching is enabled.	1 (1, 2)

Note:

Set *H1-xx = 61 [Motor 2 Select]* to enable this parameter. When *H1-xx ≠ 61* the keypad will not show this parameter.

1 : Motor 1 (sets E1-xx, E2-xx)

Auto-Tuning automatically sets parameters *E1-xx* and *E2-xx* for motor 1.

2 : Motor 2 (sets E3-xx, E4-xx)

Auto-Tuning automatically sets parameters *E3-xx* and *E4-xx* for motor 2. Make sure that you connect motor 2 to the drive for Auto-Tuning.

■ T1-01: Auto-tuning Mode Selection

No. (Hex.)	Name	Description	Default (Range)
T1-01 (0701)	Auto-tuning Mode Selection	V/f OLV OLV/PM AOLV/PM EZOLV Sets the type of Auto-Tuning.	Determined by A1-02 (Determined by A1-02)

0 : Rotary Auto Tune
1 : Static1 AutoTune
2 : Static (R)

■ T1-02: Motor Rated Power

No. (Hex.)	Name	Description	Default (Range)
T1-02 (0702)	Motor Rated Power	V/f OLV OLV/PM AOLV/PM EZOLV Uses the units set in *o1-58 [Mot Capacity Unit]* to set the motor rated output power.	Determined by o2-04, C6-01 (0.00 - 650.00 kW)

■ T1-03: Motor Rated Voltage

No. (Hex.)	Name	Description	Default (Range)
T1-03 (0703)	Motor Rated Voltage	V/f OLV OLV/PM AOLV/PM EZOLV Sets the rated voltage (V) of the motor. Enter the base speed voltage for constant output motors.	Determined by o2-04, C6-01 (200 V Class: 0.0 - 255.5 V, 400 V Class: 0.0 - 511.0 V)

If you do Auto-Tuning on a drive-dedicated motor or a specialized motor for vector control, the voltage or frequency can be lower than that of a general-purpose motor. Always compare the data from the nameplate or test report with the Auto-Tuning results and check for differences. Enter the voltage necessary to operate the motor in no-load conditions at rated speed for better control precision around rated speed. If the motor test report or the motor nameplate is not available, enter approximately 90% of the motor rated voltage.

If the drive input power supply voltage is low, enter approximately 90% of the input voltage. When the input power supply voltage is low, the current will increase. Make sure that the main power supply capacity is correct and use a molded-case circuit breaker for the drive.

■ T1-04: Motor Rated Current

No. (Hex.)	Name	Description	Default (Range)
T1-04 (0704)	Motor Rated Current	V/f OLV OLV/PM AOLV/PM EZOLV Sets the rated current (A) of the motor.	Determined by o2-04 (10% to 200% of the drive rated current)

Set the motor rated current between 50% and 100% of the drive rated current for the best performance. Enter the current at the motor base speed.

■ T1-05: Motor Base Frequency

No. (Hex.)	Name	Description	Default (Range)
T1-05 (0705)	Motor Base Frequency	V/f OLV OLV/PM AOLV/PM EZOLV Sets the base frequency (Hz) of the motor.	50.0 Hz (0.0 - 590.0 Hz)

When Auto-Tuning is carried out, the value of *T1-05* is set to *E1-04 [Max Output Frequency]*. If *T1-05 < 40 Hz*, *E1-04* = 40 Hz. If you operate the drive at a speed that is higher than the base frequency, or if you operate in the field weakening range, set *E1-04* (*E3-04* for motor 2) to the maximum output frequency after you complete Auto-Tuning.

■ T1-06: Motor Poles Number

No. (Hex.)	Name	Description	Default (Range)
T1-06 (0706)	Motor Poles Number	V/f OLV OLV/PM AOLV/PM EZOLV Sets the number of motor poles.	4 (2 to 120)

■ T1-07: Motor Base Speed

No. (Hex.)	Name	Description	Default (Range)
T1-07 (0707)	Motor Base Speed	V/f OLV OLV/PM AOLV/PM EZOLV Sets the motor base speed for Auto-Tuning (min^{-1} (r/min)).	1450 min^{-1} (r/min) (0 - 35400 min^{-1} (r/min))

■ T1-09: Motor NoLoad Current

No. (Hex.)	Name	Description	Default (Range)
T1-09 (0709)	Motor NoLoad Current	V/f OLV OLV/PM AOLV/PM EZOLV Sets the no-load current of the motor.	- (0A - T1-04; max. of 2999.9)

Note:

The display units are different for different models:
- 0.01 A: 2001 to 2042, B001 to B018, 4001 to 4023
- 0.1 A: 2056 to 2082, 4031 to 4060

The value shown is the no-load current that the drive automatically calculates from the values set in *T1-02 [Motor Rated Power]* and *T1-04 [Motor Rated Current]*. Set the no-load current shown on the motor test report. If the motor test report is not available, do not change this parameter.

■ T1-10: Motor Rated Slip Frequency

No. (Hex.)	Name	Description	Default (Range)
T1-10 (070A)	Motor Rated Slip Frequency	V/f OLV OLV/PM AOLV/PM EZOLV Sets motor rated slip.	- (0.000 - 20.000 Hz)

Shows 0.000 Hz as the default value. Set the rated slip shown on the motor test report. If the motor test report is not available, do not change this parameter.

■ T1-11: Motor Iron Loss

No. (Hex.)	Name	Description	Default (Range)
T1-11 (070B)	Motor Iron Loss	V/f OLV OLV/PM AOLV/PM EZOLV Sets the iron loss for calculating the energy-saving coefficient.	Determined by E2-11 or E4-11 (0 - 65535 W)

Note:

The default setting is different for different motor codes and motor parameter settings.

The value shown is the *E2-10 [Motor Iron Loss]* or *E4-10 [M2 Iron Loss]* for the motor output set in *T1-02 [Motor Rated Power]*. If the motor test report is available, enter the motor iron loss value to *T1-11*.

■ T1-12: Test Mode Selection

No. (Hex.)	Name	Description	Default (Range)
T1-12 (0BDB)	Test Mode Selection	V/f OLV OLV/PM AOLV/PM EZOLV Sets the function to enable Test Mode after Stationary Auto-Tuning. When you can operate the motor with a light load attached after Stationary Auto-Tuning is complete, enable this parameter.	0 (0, 1)

0 : No

1 : Yes

After Auto-Tuning, the drive automatically sets *E2-02 [Mot Rated Slip]* and *E2-03 [Mot No-Load Current]* when you operate the motor for the first time in Drive Mode.

Note:

After Auto-Tuning is complete and you set the drive to Drive Mode, operate the motor in these conditions:
- Make sure that you connect all wiring between the drive and motor
- Make sure that a mechanical brake on the motor shaft is not locked
- Keep the motor-load ratio at 30%
- Hold constant speed for longer than 1 second at a minimum of 30% of the speed set in *E1-06 [Base Frequency]* (the default setting is the same as the maximum frequency).

■ T1-13: No-load Voltage

No. (Hex.)	Name	Description	Default (Range)
T1-13 (0BDC)	No-load Voltage	V/f OLV OLV/PM AOLV/PM EZOLV Sets the no-load voltage of the motor. When the no-load voltage at rated speed is available, for example on the motor test report, set the voltage in this parameter. If the no-load voltage is not available, do not change this parameter.	T1-03 × 0.9 (200 V Class: 0.0 - 255.0 V, 400 V Class: 0.0 - 510.0 V)

Note:

To get the same qualities as a Yaskawa 1000-series drive or previous series drive, set this parameter = *T1-03 [Motor Rated Voltage]*.

◆ T2: PM MOTOR

T2 parameters set the Auto-Tuning input data for PM motor tuning.

Note:

The drive automatically sets these PM motor parameters:
- E1: V/F PARAMETER MOTOR 1
- E5: PM MOTOR SETTINGS

■ T2-01: PM AutoTune Mode Select

No. (Hex.)	Name	Description	Default (Range)
T2-01 (0750)	PM AutoTune Mode Select	V/f OLV **OLV/PM** AOLV/PM EZOLV Sets the type of Auto-Tuning for PM motors.	0 (Determined by A1-02)

Note:

The manufacturer recommends Rotational (Ld, Lq, R, back-EMF) for specialized motors. Rotational Auto-Tuning rotates the motor to measure the actual induction voltage constants for more accurate control than Stationary Auto-Tuning.

0 : PM Motor Parameter Settings

1 : PM Static Full AutoTune

2 : PM Static R Autotune

4 : PM Rotary Autotune

5 : High Frequency Injection

■ T2-02: PMMot Code Selection

No. (Hex.)	Name	Description	Default (Range)
T2-02 (0751)	PMMot Code Selection	V/f OLV **OLV/PM** AOLV/PM EZOLV If the drive is operating an SMRD, SMRA, or SSR1 series Yaskawa PM motor, enter the PM motor code in to align with the rotation speed and motor output.	Determined by A1-02 and o2-04 (0000 - FFFF)

Enter the motor code to automatically set parameters *T2-03 to T2-14*. When you are operating a specialized motor or a non-Yaskawa motor, set *T2-02 = FFFF* and enter the data from the motor nameplate or the motor test report.

You can only enter the permitted PM motor codes. Different drive control methods will accept different PM motor codes.

■ T2-03: PMMot Motor Type

No. (Hex.)	Name	Description	Default (Range)
T2-03 (0752)	PMMot Motor Type	V/f OLV **OLV/PM** AOLV/PM EZOLV Sets the type of PM motor the drive will operate.	1 (0, 1)

0 : IPM Motor

1 : SPM Motor

■ T2-04: PMMot Rated Power

No. (Hex.)	Name	Description	Default (Range)
T2-04 (0730)	PMMot Rated Power	V/f OLV **OLV/PM** AOLV/PM EZOLV Uses the units set in *o1-58 [Mot Capacity Unit]* to set the PM motor rated output power.	Determined by o2-04, C6-01 (0.00 - 650.00 kW)

■ T2-05: PMMot Rated Voltage

No. (Hex.)	Name	Description	Default (Range)
T2-05 (0732)	PMMot Rated Voltage	V/f OLV **OLV/PM** AOLV/PM EZOLV Sets the rated voltage (V) of the motor.	200 V Class: 200.0 V, 400 V: 400.0 V (200 V Class: 0.0 - 255.0 V, 400 V Class: 0.0 - 510.0 V)

■ T2-06: PMMot Rated Current

No. (Hex.)	Name	Description	Default (Range)
T2-06 (0733)	PMMot Rated Current	V/f OLV **OLV/PM** AOLV/PM EZOLV Sets the rated current (A) of the motor.	Determined by o2-04 (10% to 200% of the drive rated current)

■ T2-07: PMMot Base Frequency

No. (Hex.)	Name	Description	Default (Range)
T2-07 (0753)	PMMot Base Frequency	V/f OLV **OLV/PM** AOLV/PM EZOLV Sets the base frequency (Hz) of the motor.	87.5 Hz (0.0 - 590.0 Hz)

■ T2-08: PMMot Poles Number

No. (Hex.)	Name	Description	Default (Range)
T2-08 (0734)	PMMot Poles Number	V/f OLV **OLV/PM** AOLV/PM EZOLV Sets the number of motor poles.	6 (2 - 48)

■ T2-09: PMMot Base Speed

No. (Hex.)	Name	Description	Default (Range)
T2-09 (0731)	PMMot Base Speed	V/f OLV OLV/PM **AOLV/PM** EZOLV Sets the motor base speed (min^{-1} (r/min)).	1750 min^{-1} (r/min) (0 - 34500 min^{-1} (r/min))

■ T2-10: PMMot Stator Resistance

No. (Hex.)	Name	Description	Default (Range)
T2-10 (0754)	PMMot Stator Resistance	V/f OLV **OLV/PM** AOLV/PM EZOLV Sets the stator resistance for each motor phase.	Determined by T2-02 (0.000 - 65.000 Ω)

Note:
This parameter does not set line-to-line resistance.

■ T2-11: PMMot dAxis Inductance

No. (Hex.)	Name	Description	Default (Range)
T2-11 (0735)	PMMot dAxis Inductance	V/f OLV **OLV/PM** AOLV/PM EZOLV Sets the d-axis inductance of the motor on a per phase basis.	Determined by T2-02 (0.00 - 600.00 mH)

■ T2-12: PMMot qAxis Inductance

No. (Hex.)	Name	Description	Default (Range)
T2-12 (0736)	PMMot qAxis Inductance	V/f OLV **OLV/PM** AOLV/PM EZOLV Sets the q-Axis inductance of the motor on a per phase basis.	Determined by T2-02 (0.00 - 600.00 mH)

■ T2-13: KE Unit Selection

No. (Hex.)	Name	Description	Default (Range)
T2-13 (0755)	KE Unit Selection	V/f OLV **OLV/PM** AOLV/PM EZOLV Sets the units that the drive uses to set the induced voltage constant.	1 (0, 1)

0 : mV/rpm
1 : mV/(rad/sec)

Note:
- When *T2-13 = 0*, the drive will use *E5-24 [PM BackEMF L-L Vrms (mV/rpm)]* and will automatically set *E5-09 [PM BackEMF Vpeak (mV/(rad/ s))] = 0.0*.
- When *T2-13 = 1*, the drive will use *E5-09* and will automatically set *E5-24 = 0.0*.

■ T2-14: PMMot KE Voltage Constant

No. (Hex.)	Name	Description	Default (Range)
T2-14 (0737)	PMMot KE Voltage Constant	V/f OLV **OLV/PM** AOLV/PM EZOLV Sets the motor induced voltage constant (Ke).	Determined by T2-13 (0.0 - 2000.0)

■ T2-15: PullInCurrLv@PM Motor Tuning

No. (Hex.)	Name	Description	Default (Range)
T2-15 (0756)	PullInCurrLv@PM Motor Tuning	V/f OLV **OLV/PM** AOLV/PM EZOLV Sets the level of the pull-in current as a percentage of *E5-03 [PM Mot Rated Current (FLA)]*. Usually it is not necessary to change this setting.	30% (0 - 120%)

If the load inertia is high, increase the setting value.

◆ T3: ASR

■ T3-00: Control Loop Tune Selection

No. (Hex.)	Name	Description	Default (Range)
T3-00 (1198)	Control Loop Tune Selection	**V/f** **OLV** **OLV/PM** AOLV/PM **EZOLV** Sets the type of Control Auto-Tuning.	2 (2, 3)

2 : Dec Rate Tuning
3 : KEB Tuning

◆ T4: SIMPLE VECTOR

Use *T4 parameters* to input the data necessary for motor parameter Auto-Tuning when *A1-02 = 8 [Control Method = EZ Vector]*. Two modes are available.

T4-01 Setting	Operational overview	Items input for tuning	Items tuned
0	Follow the instructions in the setup wizard on the keypad to manually enter the necessary motor parameters.	• T4-02 [Motor Type Selection] • T4-03 [Motor Max Revolutions] • T4-04 [Motor Rated Revolutions] • T4-05 [Motor Rated Frequency] *1 • T4-06 [Motor Rated Voltage] • T4-07 [Motor Rated Current] • T4-08 [Motor Rated Capacity] • T4-09 [Motor Poles Number]	• E9-01 [Motor Type Selection] • E9-02 [Maximum Speed] • E9-03 [Rated Speed] • E9-04 [Base Frequency] • E9-05 [Base Voltage] • E9-06 [Motor Rated Current] • E9-07 [Motor Rated Power (kW)] • E9-08 [Motor Pole Count] • E9-09 [Motor Rated Slip] • E9-10 [Motor L-L Resistance]
1	Do only line-to-line resistance tuning.	Motor Rated Current	E9-10 [Motor L-L Resistance]

*1 When you use a PM motor or a synchronous reluctance motor, it is not necessary to enter the rated frequency. The drive will use the rated rotation speed and number of motor poles to automatically calculate the rated frequency.

■ T4-01: EZ Tune Mode Selection

No. (Hex.)	Name	Description	Default (Range)
T4-01 (3130)	EZ Tune Mode Selection	V/f OLV OLV/PM AOLV/PM **EZOLV** Sets the type of Auto-Tuning for EZOLV control.	0 (0, 1)

0 : Motor Constant

1 : Static R Autotune

■ T4-02: Motor Type Selection

No. (Hex.)	Name	Description	Default (Range)
T4-02 (3131)	Motor Type Selection	V/f OLV OLV/PM AOLV/PM EZOLV Sets the type of motor.	0 (0, 1, 2)

0 : IM
Induction Motor

1 : PM
Permanent Magnet Motor

2 : SynRM
Synchronous Reluctance Motor

■ T4-04: Motor Rated Revolutions

No. (Hex.)	Name	Description	Default (Range)
T4-04 (3133)	Motor Rated Revolutions	V/f OLV OLV/PM AOLV/PM EZOLV Sets rated rotation speed (min^{-1}) of the motor.	- ((40 Hz to 120 Hz) × 60 × 2/E9-08)

■ T4-05: Motor Rated Frequency

No. (Hex.)	Name	Description	Default (Range)
T4-05 (3134)	Motor Rated Frequency	V/f OLV OLV/PM AOLV/PM EZOLV Sets the rated frequency (Hz) of the motor.	Determined by E9-01 and o2-04 (40.0 - 120.0 Hz)

Note:
When *T4-02 = 1, 2 [Motor Type Selection = PM, SynRM]*, input is not necessary because it assumes: Motor Rated Revolutions/60 × Number of Motor Poles/2.

■ T4-06: Motor Rated Voltage

No. (Hex.)	Name	Description	Default (Range)
T4-06 (3135)	Motor Rated Voltage	V/f OLV OLV/PM AOLV/PM EZOLV Sets the rated voltage (V) of the motor.	200 V Class: 200.0 V, 400 V: 400.0 V (200 V Class: 0.0 - 255.0 V,400 V Class: 0.0 - 510.0 V)

■ T4-07: Motor Rated Current

No. (Hex.)	Name	Description	Default (Range)
T4-07 (3136)	Motor Rated Current	V/f OLV OLV/PM AOLV/PM EZOLV Sets the rated current (A) of the motor.	Determined by o2-04, C6-01 (10% to 200% of the drive rated current)

Note:
The value set here becomes the base value for motor protection, the torque limit, and torque control.

■ T4-08: Motor Rated Capacity

No. (Hex.)	Name	Description	Default (Range)
T4-08 (3137)	Motor Rated Capacity	V/f OLV OLV/PM AOLV/PM EZOLV Sets the motor rated power in the units set in *o1-58 [Mot Capacity Unit]*.	Determined by E9-10 (0.10 - 650.00 kW)

■ T4-09: Motor Poles Number

No. (Hex.)	Name	Description	Default (Range)
T4-09 (3138)	Motor Poles Number	V/f OLV OLV/PM AOLV/PM EZOLV Sets the number of motor poles.	Determined by E9-01 (2 - 48)

13

Glossary

Phrase	Definition
AOLV/PM	Advanced Open Loop Vector Control for Permanent Magnet Motors
Drive	Q2V
EDM	External Device Monitor
EZOLV	EZ Open Loop Vector Control
HD	Heavy Duty
IPM motor	Interior Permanent Magnet Motor
MFAI	Multi-Function Analog Input
MFAO	Multi-Function Analog Output
MFDI	Multi-Function Digital Input
MFDO	Multi-Function Digital Output
ND	Normal Duty
OLV	Open Loop Vector Control
OLV/PM	Open Loop Vector Control for Permanent Magnet Motors
PM Motor	Permanent Magnet Synchronous motor (generic name for IPM motors and SPM motors)
SIL	Safety Integrity Level
SPM motor	Surface Permanent Magnet Motor
V/f	V/f Control

Index

Numerics

24 V power supply
Power supply input terminals ... 75

A

AC reactor
Wiring ... 90
Acceleration and deceleration times
Switching by Motor 2 Selection commands ... 489
Switching by output frequency ... 489
Switching by external input ... 488
Acceleration time
Parameter ... 488
Unit of measurement setting ... 491
Adjustment of control functionality ... 130
AEr ... 238
AFR
Parameter ... 677
Alarm ... 216
Alarms ... 238
Altitude
Derating ... 303
Environment ... 29
Ambient humidity ... 29
Ambient Temperature Setting ... 29
Derating ... 303
Parameter ... 671
Analog input
Function selection for terminals AI1 and AI2 ... 609
Analog Output
Gain/Bias Adjustment ... 619
Monitor Parameter Selection ... 619
Signal Level Selection ... 619
Terminal AM Monitor Selection ... 620
Application Preset
Operation ... 121
ASR
Fine tuning ... 501
Parameter ... 499
Vector Control Adjustment Procedure ... 500
Auto-Tuning ... 122, 125
ASR and Inertia Tuning Parameters ... 721
Induction Motor ... 122
Induction Motor Parameters ... 716
PM motor ... 123
PM Motor Parameters ... 719
Precautions ... 126
Rotational Auto-Tuning Precautions ... 126
Stationary Auto-Tuning for Line-to-Line Resistance precautions ... 127
Stationary Auto-Tuning Precautions ... 127
Stator resistance Auto-Tuning precautions ... 127
Auto-Tuning Error ... 216
Auto-Tuning Errors ... 251

B

Backup
Parameters (drive to keypad) ... 118
Backup function ... 706
Base frequency
Parameter ... 530
Base Frequency
Motor 2 Parameters ... 535
Base voltage
Motor 2 parameters ... 536
Parameter ... 531
Basic operation
Get started ... 111
bAT
Fault ... 222
Minor Fault ... 238
bb ... 238
bCE
Fault ... 222
Minor Fault ... 238
Bi-Directional function ... 520
boL
Fault ... 222
Minor Fault ... 238
Braking Resistor
Protection Functions ... 669
Wiring ... 85
bUS
Detection condition settings ... 555
Detection conditions ... 552
Fault ... 222
Minor Fault ... 238
Operation Selection after Detection ... 551

C

CALL ... 239
Capacitor Maintenance Setting ... 708
Carrier frequency ... 505
Derating ... 301
Parameter ... 504
CE
Detection Selection ... 622
Detection time ... 623
Fault ... 222
Minor Fault ... 239
Operation Selection after Detection ... 622
CF ... 223
Checklist
Test run ... 134
Circulation Fan
Replacement ... 274
CoF ... 223
Communication option
Parameter ... 546
Control circuit terminal block
Replacement ... 279
Control circuit terminals
Configuration of terminal block ... 75
I/O terminals function selection switches ... 78
Terminal functions ... 73
Wire gauge ... 76
Wiring ... 72
Wiring procedure for terminal block ... 77
Control method
Selection ... 433
Cooling Fan
Activation Conditions Setting ... 671
Estimated Lifespan ... 272
Off Delay Timer ... 671
Replacement ... 274
Copy Function Error ... 216, 255
CP1
Fault ... 223
Minor Fault ... 239
CP2
Fault ... 223
Minor Fault ... 239
CPEr ... 255

CPF00 224
CPF01 224
CPF02 224
CPF03 224
CPF06 224
CPF08 224
CPF11 to CPF14 224
CPF16 to CPF24 224
CPF25 224
CPF38 224
CPyE 255
Crimp ferrule 76
CrST 239
CSEr 255
Cumulative Operation TimeSetting 707
Current Detection Speed Search 457
CyC 240
CyPo 240

D

DC Injection Braking
  Parameter 454
DC reactor
  Wiring 90
dCE1 224
dCE2 224
Deceleration time
  Parameter 488
  Unit of measurement setting 491
Delete
  Delete Backed-up Parameters 120
Derating
  Altitude 303
  Ambient Temperature Setting 303, 671
  Carrier frequency 301
  Enclosure Type 673
  External Cooling Fin 673
  Side-by-side 673
dEv
  Detection level 546
  Detection time 546
  Fault 224
  Minor Fault 240
  Operation Selection after Detection 545
dFPS 255
Diagnosing and Resetting Faults 257
Digital character 116
DIP switch 78
Disposal
  Drive 287–288
  Packing material 287–288
dnE 240
Down 2 command
  Parameter 516, 520
Down command 580, 582
  Parameter 516, 520
Drive
  Control Circuit Terminal Block Replacement 279
  Disposal 287–288
  Exterior Dimensions Diagram (IP20) 307–308, 310
  Initialization 434
  Initialize Parameters 434
  Inspection 270
  Long-Term Storage 283
  Rating (400 V) 296
  Rating (Single-phase 200 V) 295
  Rating (Three-phase 200 V) 292
Drive mode 107
Drive Mode Unit Monitor Select 696
Drive Model Selection 703
Drive watt loss 304
dv7 224
Dwell function
  Parameter 482

E

E5
  Fault 225
  Minor Fault 240
  Operation Selection after Detection 555
Earth leakage circuit breaker 87
EF 240
EF0
  Detection conditions 551
  Detection conditions setting (DeviceNet) 557
  Fault 225
  Minor Fault 241
  Operation Selection after Detection 552
EF1
  Fault 225
  Minor Fault 241
EF2
  Fault 225
  Minor Fault 241
EF3
  Fault 226
  Minor Fault 241
EF4
  Fault 226
  Minor Fault 241
EF5
  Fault 226
  Minor Fault 241
EF6
  Fault 226
  Minor Fault 241
EF7
  Fault 226
  Minor Fault 242
Elapsed Operating Time Selection 708
Electrolytic Capacitor
  Estimated Lifespan 272
Enclosure Type
  Derating 673
Encoder option
  Parameter 544
End1 251
End2 251
End3 251
End4 251
End5 251
End6 251
End7 251
End8 251
End9 252
Energy-saving control
  Parameter 483
Enter command 199
EP24v 242
Er-01 252
Er-02 252
Er-03 252
Er-04 252
Er-05 252
Er-08 253
Er-09 253

Er-10 253
Er-11 253
Er-12 253
Er-13 253
Er-14 253
Er-15 253
Er-16 254
Er-17 254
Er-18 254
Er-19 254
Er-20 254
Er-25 254
ERF type braking resistor
Protection Functions 669
Wiring 85
Err 226
Error Code List 217
Exterior and mounting dimensions
Installation dimensions 37
Panel cut out dimensions 37
Exterior Dimensions Diagram (IP20)
Drive 307–308, 310
External 24 V power supply
Power supply input terminals 75
External Cooling Fin
Derating 673

F

Fan Operation Time Setting 708
Fast Stop Time
Parameter 491
Fault 216
Fault code
Modbus 209
Fault Code List 217
Fault Reset 257
Fault Restart
Parameter 659
Faults 222
FbH
Fault 226
Minor Fault 242
FbL
Fault 227
Minor Fault 242
Feed Forward Control
Parameter 681
Field Forcing
Parameter 522
Field weakening
Parameter 522
Fine tuning 130
Firmware update lock 436
Freq Ref Setting Method Select 704
Frequency Agreement
Parameter 657
Frequency reference
Command source correlation diagram 508
LOCAL/REMOTE Run selection 444, 508
Offset frequency addition 522
Switching between LOCAL/REMOTE 444, 451, 508
Upper and lower frequency limits 514
Frequency reference bias
Parameter 516, 520
Frequency reference hold function
Parameter 516, 520
Fuse rating 94

G

Gateway Mode 547
Getting set up 111
GF 227
Protective function 671
Ground
Drive 65
Ground Fault Detection
Protective function 671

H

HCA 242
Alarm Settings 674
HD 291
Heavy Duty Rating 291
High-Slip Braking
Parameter 678
Horsepower 702
How to read catalog codes 20
Humidity
Environment 29

I

iFEr 255
IGBT Maintenance Setting 708
Induction Motor
Auto-Tuning 122
Motor parameters 531
Input Phase Detection
Protective function 670
Input voltage
Parameter 525
Inspection
Drive 270
Installation
Front cover 33
Keypad 35
Installation dimensions 37
Installation environment 29
Interlock
Circuit example 84
Internal Drive Braking Transistor
Protection Functions 674

J

Jog command 513
Jump frequency
Parameter 514
Jumper switch 78

K

KEB ride-thru function
Compensation Time 643
Operation during momentary power loss 643
Parameter 638
KEB Ride-Thru Function
KEB Method Selection 646
Single Drive KEB Method 646
System KEB Method 646
Keypad
Application Preset 121
Installation 35
Language selection 432
LED status 103
Method of operation 103
Remove 35
Keypad Display 695
Keypad Display Selection 696
Keypad Operation 702

Keypad-related settings....695
kWh Monitor Initialization....709

L

L24v....242
Language selection....432
LCD contrast adjustment....698
Leakage current....637
LED display....116
LF....227
  Protective function....670
LF2....227
  Protection Functions....673
LKEB type braking resistor unit
  Wiring....85
Load Inertia Ratio
  Parameter....653
LOCAL/REMOTE indicator....103
LoG....243
LO/RE Key Function Selection....702
LSo....228
  Protective function....675
LT-1....243
LT-2....243
LT-3....243
LT-4....243

M

Main circuit terminals
  Configuration of terminal block....46
  Line voltage drop....49
  Wire gauge....49
  Wiring....45
  Wiring procedure for terminal block....69
Maintenance Period....707
Maximum Output Frequency
  Motor 2 Parameters....535
  Parameter....530
Maximum Output Voltage
  Motor 2 Parameters....535
  Parameter....530
MCCB....87
  Wiring....87
Mechanical Weakening Detection
  Parameter....663
Mid point B frequency
  Motor 2 parameters....536
  Parameter....531
Mid point B voltage
  Motor 2 parameters....536
  Parameter....531
Middle Output Frequency
  Motor 2 Parameters....535
  Parameter....530
Middle Output Frequency Voltage
  Motor 2 Parameters....535
  Parameter....531
Minimum output frequency
  Parameter....531
Minimum Output Frequency
  Motor 2 Parameters....535
Minimum Output Voltage
  Motor 2 Parameters....535
  Parameter....531
Minor Fault....216
Minor fault code
  Modbus....210
Minor Fault Code List....217
Minor Faults....238
Modbus
  Broadcast Messages....208
  Command data....200
  Communication error code....211
  Communication specifications....190
  Enter command....199
  Fault code....209
  Loopback test....196
  Minor fault code....210
  Monitor data....202
  Register reading....195
  Register writing....196
  Self-diagnosis....199
  Wiring....190
Modbus Communications
  Parameter....621
  Serial communication terminals....75
  Setting for termination resistor....82
Molded-case circuit breaker....87
Momentary Power Loss
  KEB Compensation Time....643
Monitors
  Display procedure....116
Motor
  Positive Temperature Coefficient (PTC) Thermistor....632
  Wiring....45
  Wiring distance....65
Motor 2
  Base Frequency....535
  Base voltage....536
  Control mode settings....535
  Leakage Inductance....538
  Line-to-Line Resistance....537
  Maximum Output Frequency....535
  Maximum Output Voltage....535
  Mid point B frequency....536
  Mid point B voltage....536
  Middle Output Frequency....535
  Middle Output Frequency Voltage....535
  Minimum Output Frequency....535
  Minimum Output Voltage....535
  Motor Iron Loss....538
  Motor Iron-Core Saturation Coefficient 1....538
  Motor Iron-Core Saturation Coefficient 2....538
  Motor rated power (kW)....538
  No-load Current....537
  Number of motor poles....537
  Rated current....536
  Rated Slip....537
  V/f Pattern....534
Motor Code Selection....539
Motor Overheating
  Operation During Detection of Alarms....636
  Operation During Detection of Faults (PTC Input)....636
Motor Overload
  Electric Thermal Protection Operation Time....635
  Protection Functions....632
Motor parameters....531
  Motor 2....536
  Motor 2 Iron-Core Saturation Coefficient 1....538
  Motor 2 Iron-Core Saturation Coefficient 2....538
  Motor 2 No-load Current....537
  Motor 2 number of motor poles....537
  Motor 2 rated Current....536
  Motor 2 rated power (kW)....538
Motor Parameters....524

Motor 2 Iron Loss 538
Motor 2 Leakage Inductance 538
Motor 2 Line-to-Line Resistance 537
Motor 2 Rated Slip 537
Motor parameters (induction motors) 531
Leakage Inductance 533
Line-to-Line Resistance 533
Motor Iron Loss 534
Motor Iron-Core Saturation Coefficient 1 533
Motor Iron-Core Saturation Coefficient 2 533
Motor rated power (kW) 534
No-load Current 532
Number of motor poles 533
Rated current 532
Rated Slip 532
Motor Power Unit Selection 702
MotorDirect@PowUpWhenUsingKeypad 704
Multi-step speed operation 508
Setting procedure 508
Multiple-unit connection 547

N

Nameplate 20
ND 291
ndAT 255
Noise filter
Wiring 92
Normal Duty Rating 291
nSE 228
NumOfRunCommands Counter Initial 709

O

oC 228
Overcurrent Detection Gain 672
oC2 229
oFA00 229
oFA01 229
oFA03 to oFA06 229
oFA10 229
oFA11 229
oFA12 to oFA17 230
oFA30 to oFA43 230
Off-Delay Timer 464
Offset frequency
Parameter 522
oH
Alarm Settings 669
Fault 230
Minor Fault 243
oH1 230
oH2 243
Alarm Settings 669
oH3
Fault 230
Minor Fault 243
Operation During Detection of Alarms 636
oH4 231
Operation During Detection of Faults (PTC Input) 636
oL1 231
oL2 232
Protective function 672
oL3
Fault 232
Minor Fault 244
oL4
Fault 232
Minor Fault 244
oL5
Fault 232
Minor Fault 244
oL7 233
On-Delay Timer 464
Ope Select @Keypad is Disconnect 704
oPE01 247
oPE02 247
oPE03 247
oPE05 248
oPE07 248
oPE08 249
oPE09 249
oPE10 250
oPE11 250
oPE13 250
oPE16 250
oPE33 250
Operation During Momentary Power Loss
KEB ride-thru function 638
Operation method selection 643
Parameter 643
Speed Search function 456
oPr 233
Option card
Parameter 544
Options 312
oS
Detection level 545
Detection time 545
Fault 233
Minor Fault 244
Operation Select at Overspeed 544
Output Control 693
Output Phase Loss Detection
Protective function 670
ov
Fault 233
Minor Fault 244
Overexcitation deceleration
Parameter 679
Overtorque detection
Parameter 661

P

Panel cut out dimensions 37
Parameter
Access Level Selection 432
Automatic selection 437
Backup (drive to keypad) 118
Changing setting values 117
Checking modified parameters 116
Delete Backed-up Parameters 120
Restore (keypad to drive) 119
Setup Mode 117
User-set 437
Verify (keypad and drive) 119
Parameter Change 705
Parameter Setting Errors 216, 247
PASS 245
Password
Setting 435
Verification 435
PC
Connection procedure 83
PE1 234
PE2 234
Peripheral Devices 312
PF 234, 245

Protective function 670
PGo
Detection time 546
Fault 234
Minor Fault 245
Operation Selection after Detection 544
Phase Order Selection 451
PID control 466
control block diagram 468
Feedback value input 467
fine tuning 469
Parameter 471–472
PID feedback loss detection 468
PID Sleep 469
Setpoint input 467
PM motor
Auto-Tuning 123
PM motor parameters 538
d-Axis inductance 540
Induced voltage constant 1 540
Induced voltage constant 2 541
Motor rated current 539
Motor rated power (kW) 539
Number of motor poles 540
q-Axis inductance 540
Stator resistance 540
PM Motors
Fine Adjustment 686, 693
Motor Code Selection 539
Motor parameters 538
Positive Temperature Coefficient (PTC) Thermistor 632
Power loss 304
Programming mode 107
Protection Functions
DC bus undervoltage 644
Drive Overheating 669
HCA 674
Internal Drive Braking Transistor 674
LF2 673
Motor Overheating 636
Motor Overheating (PTC Input) 636
Motor Overload 632
oC 672
oH 669
oH2 669
oH3 636
oH4 636
Output Current Overload 674
Overcurrent 672
rr 674
Software Current Limit Selection 672
Uv1 644
Protective function
Desynchronization 675
GF 671
Ground Fault Detection 671
Input Phase Detection 670
LF 670
Low Speed Desynchronization 675
LSo 675
oL2 672
Output Phase Loss Detection 670
Overload 672
PF 670
Pulse Train Input
Terminal PI Function Selection 626
Pulse Train Input/Output
Parameter 625
Pulse train output
Terminal MP function selection 627
Wiring specifications 80
PWEr 255

Q

qAL1 240
qAL2 240
qAL3 240
qFL 225
qFL1 225
qFL2 225
qFL3 225

R

Rating (400 V)
Drive 296
Rating (Single-phase 200 V)
Drive 295
Rating (Three-phase 200 V)
Drive 292
rdEr 255
Remove
Front cover 33
Keypad 35
RESET key 103
Residual Current Monitor/Residual Current Device
RCM/RCD 87
Wiring 87
Restore
Parameters (keypad to drive) 119
Reverse Operation Selection 449
rF 234
rH 235
RJ-45 connector 103
Rotational Auto-Tuning
Induction Motor 122
PM motor 123
Precautions 126
rr 235
Protection Functions 674
rUn 245
Run command
LOCAL/REMOTE Run selection 446
Switching between LOCAL/REMOTE 446
Run Command at Power Up 453
Run Command Selection 2
Switching between LOCAL/REMOTE 452
RUN indicator 103
RUN key 103

S

S-curve characteristics
Parameter 493
SC 235
SCF 235
Screen 116
SE 245
SEr 235
Serial communication terminals
Modbus Communications 75
Short Circuit Braking
Parameter 454
Side-by-side
Derating 673
Slip compensation
Parameter 494
Softcharge Relay Maintenance Set 708

Software Current Limit Selection
Protection Functions 672
Speed Agreement
Parameter 657
Speed Detection 658
Parameter 657
Speed Estimation Speed Search 458
Speed Search function
Operation during momentary power loss 643
Parameter 456
Stall Prevention function
Parameter 648
Stationary Auto-Tuning
Induction Motor 122
PM motor 123
Precautions 127
Stationary Auto-Tuning for Line-to-Line Resistance 122
Precautions 127
Stator resistance Auto-Tuning 123
Precautions 127
SToF 245
Stop command
LOCAL/REMOTE Run selection 446
STOP key 103
STOP Key Function Selection 703
Stop with Constant Distance 520–521
Stopping Method Selection 446
STPo 236
Surge protective device
Connection 91

T

Temperature
Environment 29
Terminal block 75
Configuration of main circuit terminal block 46
Control circuit terminal block functions 73
I/O terminals function selection switches 78
Terminal function selection
Terminal AI2 ..... 78, 81
Terminal AM 78, 82
Termination resistor
Setting switch 82
Test run
Checklist 134
Fine tuning 130
Procedure 111
Procedure for no-load test run 128
Procedure for test run with actual load 128
Thermal overload relay
Connection 88
Tightening torque
Control circuit terminals 76
Main circuit terminals 49
TiM
Fault 236
Minor Fault 246
Timer function
Parameter 464
Torque Compensation
Parameter 498
Torque limit function
Parameter 666
Troubleshooting
Code Displayed 217
No Code Displayed 258
Troubleshooting without Fault Display 258
TrPC 246
Tuning 488

U

U2, U3 Initialization 709
UL3
Fault 236
Minor Fault 246
UL4
Fault 236
Minor Fault 246
UL5
Fault 236
Minor Fault 246
Undertorque detection
Parameter 661
Unit of measurement setting
Acceleration and deceleration times 491
Unit selector 702
Up 2 command
Parameter 516, 520
Up command 580, 582
Parameter 516, 520
USB port 103
Connecting a PC 83
User Monitor Select afterPowerUp 696
User Parameter Default Value 703
User-Set Display Units Max Value 698
User-SetDisplayUnits Dec Display 698
Uv 246, 705
Speed Search Selection at Start 464
Uv1 236
Detection level settings 644
Uv2 237
Uv3 237

V

vAEr 255
V/f Pattern 524
Second Motor 534
V/f Pattern Display Unit 697
Verify
Parameters (keypad and drive) 119
vFyE 256
Vibration-resistant 29
Voltage Limit 692
Voltage Saturation 693

W

WEEE 288
Wire gauge
Control circuit terminals 76
Main circuit terminals 49
Voltage drop 49
Wiring 87
AC reactor 90
Braking Resistor 85
Checklist 96
Control circuit terminal block 77
Control circuit terminals 72
DC reactor 90
Main circuit terminal block 69
Main circuit terminals 45
Modbus 190
Motor 45
Noise filter 92
Thermal overload relay 88
Wiring distance
Drive and motor 65

Z

Z pulse Auto-Tuning…… 123

Revision History

Date of Publication	Revision Number	Section	Revised Content
June 2021	C	5	Updated Declaration of Conformity
March 2021	B	3	Updated Crimp Ferrules
		11, 12	Fixed name of parameter settings in b1-02 and b1-16
September 2019	A <0>-1	5	Updated Declaration of Conformity
July 2019	-	-	First Edition

Q2V

Driving Quality

Installation & Operation Instructions

Omron Office Addresses

OMRON EUROPE B.V.
Tel: +31 (0) 23 568 13 00
industrial.omron.eu

Austria
Tel: +43 (0) 2236 377 800
industrial.omron.at

Belgium
Tel: +32 (0) 2 466 24 80
industrial.omron.be

Czech Republic
Tel: +420 234 602 602
industrial.omron.cz

Denmark
Tel: +45 43 44 00 11
industrial.omron.dk

Finland
Tel: +358 (0) 207 464 200
industrial.omron.fi

France
Tel: +33 (0) 1 56 63 70 00
industrial.omron.fr

Germany
Tel: +49 (0) 2173 680 00
industrial.omron.de

Hungary
Tel: +36 1 399 30 50
industrial.omron.hu

Italy
Tel: +39 02 326 81
industrial.omron.it

Netherlands
Tel: +31 (0) 23 568 11 00
industrial.omron.nl

Norway
Tel: +47 (0) 22 65 75 00
industrial.omron.no

Poland
Tel: +48 22 458 66 66
industrial.omron.pl

Portugal
Tel: +351 21 942 94 00
industrial.omron.pt

Russia
Tel: +7 495 648 94 50
industrial.omron.ru

South Africa
Tel: +27 (0)11 579 2600
industrial.omron.co.za

Spain
Tel: +34 902 100 221
industrial.omron.es

Sweden
Tel: +46 (0) 8 632 35 00
industrial.omron.se

Switzerland
Tel: +41 (0) 41 748 13 13
industrial.omron.ch

Turkey
Tel: +90 212 467 30 00
industrial.omron.com.tr

United Kingdom
Tel: +44 (0) 1908 258 258
industrial.omron.co.uk

More Omron representatives
industrial.omron.eu

In the event that the end user of this product is to be the military and said product is to be employed in any weapons systems or the manufacture thereof, the export will fall under the relevant regulations as stipulated in the Foreign Exchange and Foreign Trade Regulations. Therefore, be sure to follow all procedures and submit all relevant documentation according to any and all rules, regulations and laws that may apply. Specifications are subject to change without notice for ongoing product modifications and improvements.

Original Instructions

© 2021 YASKAWA Europe GmbH

MANUAL NO. SIEP YEUOQ2V 01C
Revision C <2>-1
July 2021
Published in Germany