OMRON

Remote I/O SRT2 Series

Replacement Guide
From CompoBus/S to CompoNet

P142-E1-01

NOTE:
All rights reserved. No part of this publication may be reproduced, stored in a retrieval system, or transmitted, in any form, or by any means, mechanical, electronic, photocopying, recording, or otherwise, without the prior written permission of
OMRON.
No patent liability is assumed with respect to the use of the information contained herein. Moreover, because OMRON is constantly striving to improve its high-quality products, the information contained in this manual is subject to change without notice. Every precaution has been taken in the preparation of this manual. Nevertheless, OMRON assumes no responsibility for errors or omissions. Neither is any liability assumed for damages resulting from the use of the information contained in this publication.

■ Introduction

This guide provides the reference information for device replacement. This guide does not include precautions and reminders. Please read and understand the important precautions and reminders described in the (both of the old and new devices) and test operation before replacement.

Additional Information

The information about the remote I/O communication settings for CompoBus/S and CompoNet are on the facing pages.
Refer to odd pages for the setting of CompoBus/S, and to even pages for the setting of CompoNet.

■ Related Manuals

Cat. No.	Model	Title
W472	CJ2H-CPU6-EIP CJ2H-CPU6□ CJ2M-CPU□□	CJ Series CJ2 CPU Unit Hardware USER'S MANUAL
W473	CJ2H-CPU6-EIP CJ2H-CPU6□ CJ2M-CPU□□	CJ Series CJ2 CPU Unit Software USER'S MANUAL
W486	CJ2M-CPU□□ CJ2M-MD21	CJ Series CJ2M CPU Unit Pulse I/O Module USER'S MANUAL
W394	CS1□-CPU□□□-□□ CJ2H-CPU6□-EIP CJ2H-CPU6□ CJ2M-CPU□□ CJ1□-CPU□□□-□ NSJ□□-□□□□□-□□□	CS/CJ/NSJ Series Programmable Controllers PROGRAMMING MANUAL
W474	CS1□-CPU□□□-□□ CJ2H-CPU6□-EIP CJ2H-CPU6□ CJ2M-CPU□□ CJ1□-CPU□□□-□ NSJ□□-□□□□□-□□□	CS/CJ/NSJ Series Programmable Controllers INSTRUCTIONS REFERENCE MANUAL
W342	CS1G/CS1H/CS1D/CS1W CJ2H/CJ2M CJ1G/CJ1H/CJ1M/CJ1W CP1H/CP1L/CP1E/ NSJ	CS/CJ/CP/NSJ Series Communications Commands REFERENCE MANUAL
W339	CS1G/H-CPU□□H CS1G/H-CPU□□-V1	CS Series Programmable Controllers OPERATION MANUAL

Cat. No.	Model	Title
W266	C200HW-SRM21-V1 CS1W-SRM21□ CJ1W-SRM21□ CQM1-SRM21-V1 SRT1 series SRT2 series	CompoBus/S OPERATION MANUAL
W456	CS/CJ1W-CRM21	CS1W-CRM21/ CJ1W-CRM21 CompoNet Master Units OPERATIONAL MANUAL
W457	CRT1 series	CompoNet Slave Units and Repeater Unit OPERATION MANUAL
W484	CRT1-VAD02S/ML、 CRT1-VDA02S/ML	CompoNet Analog I/O Slave (Numerical Indicator Type) USER'S MANUAL
W446	WS02-CXPC□-V8	CX-Programmer Ver.9 OPERATION MANUAL
W464	CXONE-AL□□C-V3/AL□□D-V3	CS/CJ/CP/NSJ Series CX-Integrator Ver.2 OPERATION MANUAL
W493	CJ1W-CRM21	CJ1W-CRM21 CJ Series CompoNet Master Units Operation Manual for NJ-series CPU unit

Terms and Conditions Agreements

Thank you for your usage of products of Omron Corporation (Omron). Without any special agreements, these terms and conditions shall apply to all transactions regardless of who sells.

● Definitions of Terms

Omron product(s): Omron's factory automation system devices, general control devices, sensing devices, and electronic/mechanical components.

- Catalogues: Any and all catalogues (including "Best Components" and other catalogues), specifications, instructions and manuals relating to Omron products, including electronically provided data.
- Conditions: Use conditions, rating, performance, operating environment, handling procedure, precautions and/or prohibited use of Omron products described in the catalogues.
- User application(s): Application of Omron products by a customer, including but not limited to embedding/using Omron products into customer's components, electronic circuit boards, devices, equipment or systems.
- Conformity: (a)conformity, (b)performance, (c) no infringement of intellectual property of third party , (d)compliance with laws and regulations, and (e) conformity to various standards of Omron products in user applications.

● Note about Descriptions

Understand the followings as to contents of the catalogues.

- Rating and performance is tested separately. Combined conditions are not warranted.
- Reference data is intended to be used just for reference. Omron does NOT guarantee that the Omron Product can work properly in the range of reference data.
- Examples are intended for reference. Omron does not warrant the conformity in usage of the examples.
- Omron may discontinue Omron products or change specifications of them because of improvements or other reasons.

● Note about Use

Adopt and use Omron products considering the following cautions.

- Use the product in conformance to the conditions, including rating and performance.
- Check the conformity and decide whether or not Omron products are able to be adopted. Omron makes no guarantees about the conformity.
- Make sure in advance that electricity is properly supplied to Omron products and they are set up rightly in your system for intended use.
- When you use Omron products, ensure the followings: (i) allowance in aspect of rating and performance, (ii) safety design which can minimize danger of the application when the product does not work properly, (iii) systematic safety measures to notify danger to users, and (ⅳ) periodical maintenance of Omron products and the user application.
- Omron assumes no responsibility for any direct or indirect loss, damage and expense resulting from infection of our products, installed software, any computer devices, computer programs, network, and databases with the followings:
  - DDoS attack (distributed DoS attack),
  - Computer virus and other technically harmful program, and
  - Unauthorized access.

Please conduct the followings by yourself: (i) antivirus software, (ii) data input/output, (iii) lost

data recovery, (iv) protections against computer virus that contaminate Omron products or the installed software, and (v) measures to protect Omron products from unauthorized access.

- Omron products are designed and manufactured as commodity for general industrial products. For this reason, the usages (a) to (d) are to be unintended. Omron makes no guarantees on Omron products, if you use Omron products for those purposes.

However, special applications that Omron expects or usages with especial agreement are excluded.

(a) Applications requiring high-level safety (e.g. nuclear control facilities, combustion facilities, aerospace and aviation facilities, railroad facilities, elevating facilities, amusement facilities, medical facilities, safety devices or other applications which has possibility to influence lives or bodies)

(b) Applications requiring high reliability (e.g. gas/water/electricity supply system, 24-hour operating system, applications handling with rights/property, such as payment system)

(c) Applications in a harsh condition or environment (e.g. outdoor facilities, facilities with potential of chemical contamination or electromagnetic interference, facilities with vibration or impact, facilities on continual operation for a long period)

(d) Applications under conditions or environment which are not described in the catalogues

- Omron products in the catalogues are not intended to be used in automotive applications (including two-wheel vehicles). Please DO NOT use Omron products in automotive applications. Contact our sales personnel for automotive products.

● Warranty

Warranty of Omron products is subject to followings.

- Warranty Period: One year after your purchase. However, except when there is a separate statement in the catalogues.
- Coverage: Omron will provide one of the services listed below, on the basis of Omron's decision.

(a) Free repairing of the malfunctioning Omron products (except electronic/mechanical components) at Omron maintenance service sites.

(b) Free replacement of the malfunctioning Omron products with the same number of substitutes.

- Exceptions: This warranty does not cover malfunctions caused by any of the followings.

(a) Usage in the manner other than its original purpose

(b) Usage out of the conditions

(c) Usage out of Note about Use in these conditions

(d) Remodeling/repairing by anyone except Omron

(e) Software program by anyone except Omron

(f) Causes which could not be foreseen by the level of science and technology at the time of shipment of the products.

(g) Causes outside Omron or Omron products, including force majeure such as disasters

● Limitation of Liability

The warranty described in this Terms and Conditions Agreements is a whole and sole liability for Omron products. There are no other warranties, expressed or implied. Omron and its distributors are not liable for any damages arisen from or relating to Omron products.

● Export Control

Customers of Omron products shall comply with all applicable laws and regulations of other relevant countries with regard to security export control, in exporting Omron products and/or technical documents or in providing such products and/or documents to a non-resident.

Omron products and/or technical documents may not be provided to customers if they violate the laws and regulations.

Contents

Terms and Conditions Agreements 6
1. Overview 1
1.1. Overview 1
1.2. Intended Audience 1
2. Alternative Replacement Products 1
3. Characteristics of CompoBus/S and CompoNet 3
3.1. Communication Specifications 3
3.2. Functions and Specifications 4
3.3. Remote I/O Design 6
3.4. Program Creation 7
4. Settings for Remote I/O 8
4.1. Procedure of Remote I/O Communications Settings 8
4.2. Detailed Procedures 9
4.2.1. System Configuration 9
4.2.2. Hardware Settings for Master Unit 10
4.2.3. Hardware Settings for Slave Unit 16
4.2.4. Wiring 18
4.2.5. Starting the System and the Remote I/O Communications 24
4.2.6. Operation Test 25
4.2.7. Error Monitoring 26
5. Terms and Definitions 30
6. Appendix 32
6.1. Example of Remote I/O Memory Area Replacement 32
6.1.1. Preconditions 32
6.1.2. Automatically Allocated Remote I/O Memory Area under the Preconditions Above 32
6.2. I/O Response Time 34
6.2.1. Minimum I/O Response Time in CompoBus/S 34
6.2.2. Minimum I/O Response Time in CompoNet 35
6.2.3. Maximum I/O Response Time in CompoBus/S 36
6.2.4. Maximum I/O Response Time in CompoNet 37

1. Overview

1.1. Overview

Reading this guide, you can get the information to replace CompoBus/S system with CompoNet system easily.
This document contains only the important points. Please refer to manuals and technical documents listed in “Related Manuals” for detailed operation procedures.

1.2. Intended Audience

Customers who have built the remote I/O communications system with CompoBus/S and is in charge of system migration to a CompoNet system

2. Alternative Replacement Products

Product to be Replaced	Recommended Alternative Product	Reminder for using VCTF cables
CJ1W-SRM21	CJ1W-CRM21	—
CS1W-SRM21	CS1W-CRM21	—
SRT2-ID04	CRT1-ID08	Terminal block adapter DCN4-TB4 is necessary.
SRT2-ID04-1	CRT1-ID08-1	Terminal block adapter DCN4-TB4 is necessary.
SRT2-ID08	CRT1-ID08	Terminal block adapter DCN4-TB4 is necessary.
SRT2-ID08-1	CRT1-ID08-1	Terminal block adapter DCN4-TB4 is necessary.
SRT2-ID16	CRT1-ID16	Terminal block adapter DCN4-TB4 is necessary.
SRT2-ID16-1	CRT1-ID16-1	Terminal block adapter DCN4-TB4 is necessary.
SRT2-OD04	CRT1-OD08	Terminal block adapter DCN4-TB4 is necessary.
SRT2-OD04-1	CRT1-OD08-1	Terminal block adapter DCN4-TB4 is necessary.
SRT2-OD08	CRT1-OD08	Terminal block adapter DCN4-TB4 is necessary.
SRT2-OD08-1	CRT1-OD08-1	Terminal block adapter DCN4-TB4 is necessary.
SRT2-OD16	CRT1-OD16	Terminal block adapter DCN4-TB4 is necessary.
SRT2-OD16-1	CRT1-OD16-1	Terminal block adapter DCN4-TB4 is necessary.
SRT2-ID16T	CRT1-ID16TA	Terminal block adapter DCN4-TB4 is necessary.
SRT2-ID16T-1	CRT1-ID16TA-1	Terminal block adapter DCN4-TB4 is necessary.
SRT2-OD16T	CRT1-OD16TA	Terminal block adapter DCN4-TB4 is necessary.
SRT2-OD16T-1	CRT1-OD16TA-1	Terminal block adapter DCN4-TB4 is necessary.
SRT2-MD16T	CRT1-MD16TA	Terminal block adapter DCN4-TB4 is necessary.
SRT2-MD16T-1	CRT1-MD16TA-1	Terminal block adapter DCN4-TB4 is necessary.

Product to be Replaced	Recommended Alternative Product	Reminder for using VCTF cables
SRT2-ID32ML	CRT1-VID32ML	Terminal block adapter DCN4-TB4 is necessary.
SRT2-ID32ML-1	CRT1-VID32ML-1	Terminal block adapter DCN4-TB4 is necessary.
SRT2-OD32ML	CRT1-VOD32ML	Terminal block adapter DCN4-TB4 is necessary.
SRT2-OD32ML-1	CRT1-VOD32ML-1	Terminal block adapter DCN4-TB4 is necessary.
SRT2-MD32ML	CRT1-VMD32ML	Terminal block adapter DCN4-TB4 is necessary.
SRT2-MD32ML-1	CRT1-VMD32ML-1	Terminal block adapter DCN4-TB4 is necessary.
SRT2-VID16ML	CRT1-VID16ML	Terminal block adapter DCN4-TB4 is necessary.
SRT2-VID16ML-1	CRT1-VID16ML-1	Terminal block adapter DCN4-TB4 is necessary.
SRT2-VOD16ML	CRT1-VOD16ML	Terminal block adapter DCN4-TB4 is necessary.
SRT2-VOD16ML-1	CRT1-VOD16ML-1	Terminal block adapter DCN4-TB4 is necessary.
SRT2-AD04	CRT1-AD04	Terminal block adapter DCN4-TB4 is necessary.
SRT2-DA02	CRT1-DA02	Terminal block adapter DCN4-TB4 is necessary.
SRT2-ROF08	CRT1-ROF16	Terminal block adapter DCN4-TB4 is necessary.
SRT2-ROF16	CRT1-ROF16	Terminal block adapter DCN4-TB4 is necessary.
SRT2-ROC08	CRT1-ROS08	Terminal block adapter DCN4-TB4 is necessary.
SRT2-ROC16	CRT1-ROS16	Terminal block adapter DCN4-TB4 is necessary.
SRT2-ID08S	CRT1-VID08S	Terminal block adapter DCN4-TB4 is necessary.
SRT2-OD08S	CRT1-VOD08S	Terminal block adapter DCN4-TB4 is necessary.
SRT2-VID08S	CRT1-VID08S	Terminal block adapter DCN4-TB4 is necessary.
SRT2-VID08S-1	CRT1-VID08S-1	Terminal block adapter DCN4-TB4 is necessary.
SRT2-VOD08S	CRT1-VOD08S	Terminal block adapter DCN4-TB4 is necessary.
SRT2-VOD08S-1	CRT1-VOD08S-1	Terminal block adapter DCN4-TB4 is necessary.
SRS1-T	DRS1-T	—

3. Characteristics of CompoBus/S and CompoNet

In this chapter, you can learn differences between CompoBus/S and CompoNet in terms of features and specifications.

3.1. Communication Specifications

Item	CompoBus/S	CompoNet
Baud Rate (bps)	Long distance mode: 93.75k	93.75k
	High-speed mode: 750k	1.5M 3M 4M When the high-speed mode has been selected, the recommended baud rate is 1.5M bps. Cable length is restricted at the baud rates of 3M and 4M bps.
Max. I/O Points	IN: 128 OUT: 128	Word slave. 1024 for IN, and 1024 for OUT.
Max. Connectable Nodes	IN: 16 OUT: 16	Word slave. 64 for IN, and 64for OUT.
Occupied Points Per Node	8	Word slave: 16
Communications Function	Remote I/O	Remote I/O Messaging
Transmission Type	Trunk-branch type, free wiring	Trunk-branch type, free wiring + repeater unit
Max. Length of Trunk Line	High-speed Mode (750k): 100 m Long Distance Mode (93.75k): 500 m max. (one trunk)	[Without repeater] 1.5M (w/o branch line): 100 m 1.5M (w/ branch line): 30 m 3M, 4M : 30 m 93.75k: 500 m [With repeater] 1.5M - 4M: Approx. 1.9 km 93.75k: Approx. 32 km (Total of trunk and sub-trunk lines)

3.2. Functions and Specifications

Item	CompoBus/S	CompoNet
Smart Slave Function	Not available.	Available. A slave unit itself can memorize various value-added functions other than ON/OFF.
Network Monitoring	Available. Constant monitoring on illegal participation of an unregistered slave and remote I/O communications error	Available. Constant monitoring on illegal participation of an unregistered slave and remote I/O communications error. In addition, it is possible to gather the data from a host PC or a CPU unit with the messaging.
Unit Error History	Not available.	Available. Up to 64 records are saved to the unit.
Flexible Allocation Area Setting	Not available. Fixed allocation only.	Available. Flexible allocation in the I/O Allocation Area and the Status Area is possible by settings through the software.
Automatic Baud Rate Setting	Not available. When the baud rates are changed, settings of a master and all slaves must be changed.	Available. A slave follows a master automatically.
Slave Registration Function (Non-existent Slave Alert)	Available. If you register slaves in advance, you can find: non-participation of the registered slave unit, delayed startup, and illegal participation of unregistered slave unit.	
Unit Status Indication	LED only: master status, communications status	LED and 7-segment display: master status, communications status, ongoing error code
Mounting/ Demounting of the Slave I/O Terminal Block	Disabled	Enabled
Communications Stop Mode Setting	Available	Available
Transmission Media	VCTF JIS C 3306 (0.75 x 2-core/ 0.75 x 4-core) , compatible	
	Dedicated flat cable	- Dedicated flat cable (0.75 x

Item	CompoBus/S	CompoNet
	SCA1-4F10 (0.75 x 4-core) Not usable for CompoNet.	4-core) - Flat cable Ⅰ (without sheath) DCA4-4F10 - Flat cable Ⅱ (with sheath) DCA5-4F10
Terminating Resistor	SRS1-T Not usable for CompoNet.	DRS1-T
Dedicated Tool (For the dedicated flat cable connector)	-	DWT-A01 DWT-A02
Supported Master Unit (OMRON)	- CS/ CJ1 series - CQM1 series - CPM2C/ SRM1 (Micro PLC) - Sysmac board (Board PLC: ISA) - VME master board	CS/ CJ1 series
Supported Slave (OMRON)	I/O, Analog unit, Photoelectric sensor, Invertor, Position control driver	I/O, Analog unit, Temperature sensor, Slice I/O (multi-point), Sensor communications (Smart sensor)
Slave Unit Mounting Method	Screws (M4), or DIN rail	No screw hole. DIN rail or mounting bracket
User Vendor	OMRON + family vendor (Leaded by OMRON)	Open network (multi vendors)

3.3. Remote I/O Design

item	CompoBus/S	CompoNet
Remote I/O Memory Area Allocation	Fixed allocation according to Unit No. of master unit.	- Fixed allocation - Allocation to the selected area with the tool *Select an allocation mode.
Setting Tool	None	CX-Integrator

3.4. Program Creation

Item	CompoBus/S	CompoNet
Access to Remote I/O Data	Note that channel ranges to be allocated to access to the remote I/O data that is in the Remote I/O Memory Area of the PLC are not the same. See examples shown in Section 6.1.	
Network Status Monitoring	In the Special I/O Unit Area, First address = (2000 ＋ Unit No. x 10). Add the first address to offsets below to monitor the network status. ・ Connectable node address: IN0 - 7, OUT0 – 7 First address + 8 - 9 CH ・ Connectable node address: IN0 - 15, OUT0 - 15 First address + 16 - 19 CH [Monitoring Items] - Participation/ non-participation of a slave - Slave communications error	In the Special I/O Unit Area, First address = (2000 ＋ Unit No. x 10). Add the first address to offsets below to monitor the network status. ・ Communications mode No.0 IN/OUT: 8 point 16 - 19 CH ・ Communications mode No.1 IN/OUT: 16 points each First address + 32 - 37 CH ・ Communications mode No.2 IN/OUT: 32 points each First address + 64 - 73CH [Monitoring Items] - Network status - Setting parameter - Participation/ non-participation of a slave - Slave communications error
Slave Node Address Setting Connectable with Master Unit	Dip switch [SW] - OFF Connectable node address: IN0 -7, OUT0 - 7 - ON Connectable node address: IN0 -15, OUT0 - 15	Rotary switch [MODE] - Communications mode No.0 Connectable node address: IN0 – 7, OUT0 - 7 - Communications mode No.1 Connectable node address: IN0 – 15, OUT0 - 15 - Communications mode No.2 Connectable node address: IN0 – 31, OUT0 - 31

4. Settings for Remote I/O

Startup procedures of CompoBus/S and CompoNet systems are compared in this chapter to identify the important points.

4.1. Procedure of Remote I/O Communications Settings

A flowchart to startup the remote I/O communications is shown below. There is no major difference in the CompoBus/S and CompoNet systems.

	(CompoBus/S)	(CompoNet)
4.2.1	System Configuration	Same
	▼	▼
4.2.2	Hardware Settings for Master Unit: Unit No., No. of Connected Nodes, Baud Rate	Same (Unit No., baud rate, mode setting)
	▼	▼
4.2.3	Hardware Settings for Slave Unit: Node Address, Baud Rate	Same (Node address)
	▼	▼
4.2.4	Wiring	Same
	▼	▼
4.2.5	Starting the System and Remote I/O Communications	Same
	▼	▼
4.2.6	Operation Test	Same
	▼	▼
4.2.7	Error Monitoring	Same

Precautions for Correct Use

In the CompoNet system, the remote I/O communications are available by setting the switches on the master unit front panel only. However, a peripheral tool CX-Integrator can configure more useful functions: flexible remote I/O memory area allocation, communications monitoring.

4.2. Detailed Procedures

This chapter provides the detailed information about the procedures to start the remote I/O communications.

4.2.1. System Configuration

Design the system considering the points listed below.

CompoBus/S	CompoNet
- Location of the master and slave units - Dimensions - Communication distance and baud rate - Type of connection (T-branch, multi-drop, etc.) - Number of I/O - Power supply method for communications and I/O - Types of connector, terminal block, etc.	

4.2.2. Hardware Settings for Master Unit

Configure the settings with the rotary switches and dip switches on the front of the master unit.

Precautions for Safe Use

Be sure to configure the settings after turning off the PLC.

CompoBus/S

Set the Unit No., the number of nodes to connect, and baud rate.

CS1W/CJ1W-SRM21

(Sample illustration: CJ1W-SRM21)

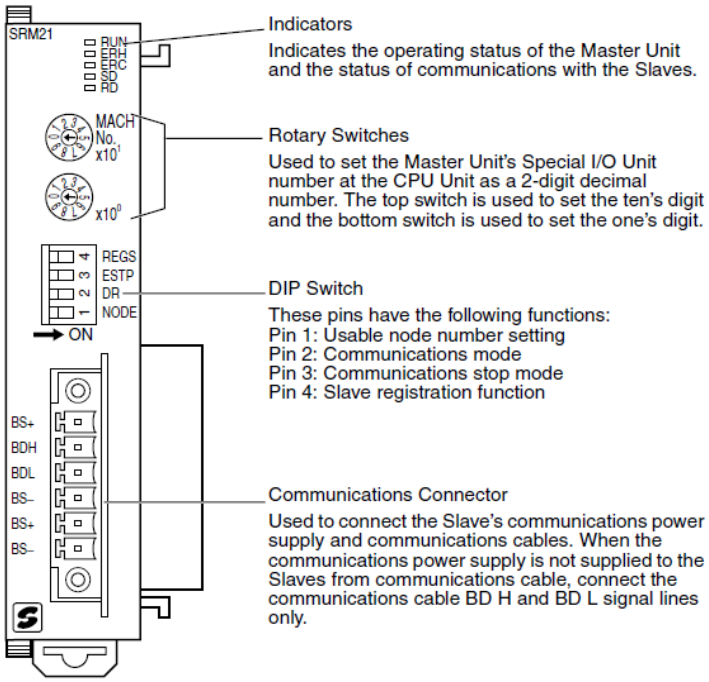

Rotary Switches

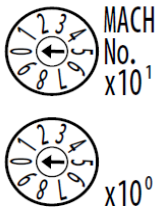

The rotary switches are used to set the Master Unit's Special I/O Unit number as a decimal number.

The range of usable node number settings (set using pin 1 of the DIP switch) are listed in the following table.

DIP switch pin 1 (NODE)	Usable node number setting	Unit number setting range
OFF	IN0 to IN7 and OUT0 to OUT7 (When using the words for one Special I/O Unit (10 words))	0 to 95
ON	IN0 to IN15 and OUT0 to OUT15 (When using the words for two Special I/O Units (20 words))	0 to 94

Any unit number in the ranges above can be set, as long as the same unit number has not been set on another Special I/O Unit mounted in the PLC. Set the unit number with a small standard screwdriver; be careful not to damage the switch.

CompoNet

Set the Unit No., baud rate, and communications mode.

CS1W/CJ1W-CRM21

(Sample illustration: CJ1W-CRM21)

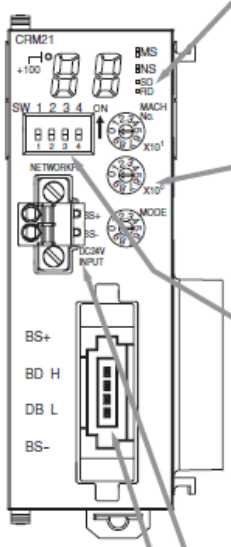

Display Section
Shows the Master Unit status and Slave Unit communications status.
· Indicators
Four LED indicators:
MS (green/red), NS (green/red), SD (yellow), and RD (yellow)
· Seven-segment Display
Displays the communications status, error code, etc.
(two digits plus a dot that indicates "+100")

Rotary Switches
· MACH No.
Special I/O Unit unit number setting
Two decimal rotary switches (0 to 99)
· MODE
Communications mode number of the Master Unit
One decimal rotary switch (0 to 9)

DIP Switch
Used to set the baud rate, communications stop mode, and Registration Table (4-pin switch).

SW1 DR0	SW2 DR1	Baud rate setting
OFF	OFF	4 Mbits/s (default) Note: A baud rate of 4 Mbits/s is not supported for branch lines and thus cannot be used for Slave Units with Cables (i.e., Bit Slave Units).
ON	OFF	3 Mbits/s
OFF	ON	1.5 Mbits/s
ON	ON	93.75 kbits/s

SW	Name	ON	OFF
3	ESTP (Communications Error Communications Stop Mode)	Communications stop when a communications error occurs.	Communications do not stop when a communications error occurs.
4	REGS (Registration Table Enable Setting)	Registration Table enabled.	Registration Table disabled.

Communications Power Supply Connector
Connect this connector to a 24-VDC power supply when using Round Cable II, Flat Cable I, or Flat Cable II cable.
Doing so will supply communications power to the Slave Units and Repeater Units on the trunk line from the communications connector through the Flat Cable.
Note: Do not connect anything to this connector when using Round Cable I cable.

Communications Connector
Connect the communications cable to this connector.
BS+, BS- (communications power) and BDH, BDL (communications data)
BS+ and BS- are used only when using Round Cable II, Flat Cable I, or Flat Cable II cable to output the communications power supply connected to the communications power supply connector.
Note: Open Type Connector (to connect Units to the Cable) can be used to connect to a terminal block.

Unit Number Switches (MACH No.)

Special I/O Unit unit number setting: Two decimal rotary switches (0 to 99)

This setting is read when the power supply is turned ON to the PLC.

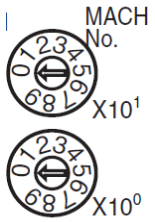

CompoBus/S	
DIP Switch	The DIP switch is used to set the range of usable node numbers of Slaves, the communications mode, communications stop mode, and Slave registration function.

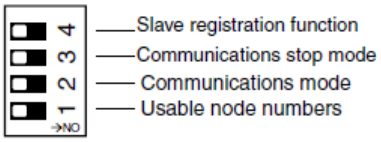

Set pin 1 (NODE) of the DIP switch as shown in the following table.

Pin 1 setting	Usable node number setting	Maximum I/O points	Words allocated in the Special I/O Unit Area
OFF	IN0 to IN7 and OUT0 to OUT7 (up to 16 nodes can be connected)	128 points (64 inputs, 64 outputs)	10 words (words for one unit) Input/output data: 4 input words and 4 output words Status information: 2 words
ON	IN0 to IN15 and OUT0 to OUT15 (up to 32 nodes can be connected)	256 points (128 inputs, 128 out-puts)	20 words (words for two units) Input/output data: 8 input words and 8 output words Status information: 4 words

CompoBus/S
Dip switch (SW1) [OFF] Connectable node address: IN0 – 7, OUT0 - 7 [ON] Connectable node address: IN0 – 15, OUT0 - 15

Set pin 2 (DR) of the DIP switch as shown in the following table.

Pin 2 setting	Communications mode setting	Communications distance	Communications baud rate	Communications cycle time
OFF	High-speed Com-munications Mode	100 m max.	750 kbps	0.5 ms (pin 1 OFF) or 0.8 ms (pin 1 ON)
ON	Long-distance Communications Mode	500 m max.	93.75 kbps	4.0 ms (pin 1 OFF) or 6.0 ms (pin 1 ON)

CompoBus/S		
SW2	Communications mode setting	Baud rate
OFF	High-speed mode	750k bits/s
ON	Long distance mode	93.75k bits/s

CompoNet

MODE Switch

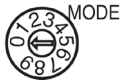

Master Unit communications mode number setting: One decimal rotary switch (0 to 9)

This setting is read when the power supply is turned ON to the PLC.

Communications mode No.	Name	Connectable node addresses	Control points	Memory areas	Number of unit numbers used per Master Unit	Settable range
0	Communications mode No. 0	Word Slave Units: IN0 to IN7 and OUT0 to OUT7	Word Slave Units: 128 inputs and 128 outputs	Special I/O Unit Area (First word depends on unit number of Master Unit.)	2	00 to 94
1	Communications mode No. 1	Word Slave Units: IN0 to IN15 and OUT0 to OUT15	Word Slave Units: 256 inputs and 256 outputs		4	00 to 92
2	Communications mode No. 2	Word Slave Units: IN0 to IN31 and OUT0 to OUT31	Word Slave Units: 512 inputs and 512 outputs		8	00 to 88
3	Communications mode No. 3	Word Slave Units: IN0 to IN15 and OUT0 to OUT15 Bit Slave Units: IN0 to IN63 and OUT0 to OUT63	Word Slave Units: 256 inputs and 256 outputs Bit Slave Units: 128 inputs and 128 outputs		8	00 to 88
4	Reserved	---	---	---	---	---
5	Reserved	---	---	---	---	---
6	Reserved	---	---	---	---	---
7	Reserved	---	---	---	---	---
8	Software Setting Mode	Can be set within the following ranges: Word Slave Units: IN0 to IN63 and OUT0 to OUT63 Bit Slave Units: IN0 to IN127 and OUT0 to OUT127	Can be set within the following ranges: Word Slave Units: 1,024 inputs and 1,024 outputs Bit Slave Units: 256 inputs and 256 outputs	Can be allocated anywhere in the CIO, DM, WR, or HR Areas. **Note** Status and parameters are allocated in the Special I/O Unit Area.	1	00 to 95
9	Reserved	---	---	---	---	---

CompoNet
Rotary switch (NODE) [Communications Mode No.0] Connectable node address: IN0 – 7, OUT0 - 7（CompoBus/S SW1　OFF） [Communications Mode No.1] Connectable node address: IN0 – 15, OUT0 - 15（CompoBus/S SW1　ON）

Note: It is possible to add connectable node addresses per master using the communications mode No.2 and No.8.

DIP Switch

This setting is read when the power supply is turned ON to the PLC.

Baud Rate Setting

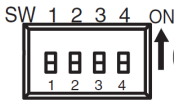

SW1	SW2	Baud rate setting
DR0	DR1	
OFF	OFF	4 Mbps (default)
ON	OFF	3 Mbps
OFF	ON	1.5 Mbps
ON	ON	93.75 kbps

Slave Units automatically detect the baud rate set on SW1 (DR0) and SW2 (DR2). It is not necessary to set the baud rate separately for any of the Slave Units.

CompoNet		
SW1	SW2	Baud rate
OFF	ON	1.5M bits/s: Equivalent to the high-speed communications mode of CompoBus/S)
ON	ON	93.75k bits/s: Equivalent to the long distance communications mode of CompoBus/S.

Replacing the CompoBus/S high-speed communications mode, the cable length is tightly constrained if the baud rate is set to 3M bits/s or 4M bits/s. The recommended baud rate is 1.5M bits/s.

CompoBus/S

Set pin 3 of the DIP switch as shown in the following table.

Pin 3 setting	Communications stop mode setting
OFF	Communications mode Continues remote I/O communications when a communications error occurs.
ON	Communications stop mode Stops remote I/O communications when a communications error occurs.

CompoBus/S	
SW3	Communication stop mode setting (ESTP)
OFF	Normal mode
ON	Communication stop mode

Set pin 4 (REGS) of the DIP switch as shown in the following table.

Pin 4 setting	Slave registration function setting
OFF	Slave registration function setting disabled
ON	Slave registration function setting enabled

CompoBus/S	
SW4	Slave registration function setting
OFF	Disables the slave registration function
ON	Enables the slave registration function

CompoNet

Communications Error Communications Stop Mode Setting

SW	Name	ON	OFF
3	ESTP (Communications Error Communications Stop Mode)	Communications stop when a communications error occurs.	Communications do not stop when a communications error occurs.

When SW3 (ESTP) is turned ON, all remote I/O communications are stopped when a communications error occurs at any Slave Unit. (The Communications Error Communications Stop Flag at status bit 02 also turns ON.) When SW3 is turned OFF, remote I/O communications continue even if a communications error occurs at a Slave Unit.

CompoNet	
SW3	Communication stop mode setting (ESTP)
OFF	Normal mode
ON	Communication stop mode

Registration Table Enable Setting

SW	Name	ON	OFF
4	REGS (Registration Table Enable Setting)	Registration Table enabled.	Registration Table disabled.

If the power is turned ON while SW 4 (REGS) is ON, the registration tables that have been edited or downloaded by the CX-Integrator will be enabled. Only registered Slave Units can participate. The registered Slave Units are also compared to actual Slave Units. If they do not agree, the Registered Table Verification Error Flag in status bit 01 will turn ON.

CompoNet	
SW4	Registration table enable setting
OFF	Disables the registration table
ON	Enables the registration table

4.2.3. Hardware Settings for Slave Unit

Configure settings using dip switches and rotary switches on the front panel of slave unit.

Precautions for Safe Use

Be sure to configure the settings after turning off slave units.

CompoBus/S

Configure the baud rate and node address.

(Sample illustration: SRT2-ID08)

DIP Switch

The DIP switch is located on the left side of the Transistor Remote Terminal, under the cover. Always turn OFF the Slave before changing the node number setting.

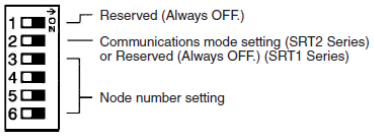

Node Number Settings

Set the node number with pins 3 through 6, as shown in the following table.

Node number	Pin 3 (8)	Pin 4 (4)	Pin 5 (2)	Pin 6 (1)
0	OFF	OFF	OFF	OFF
1	OFF	OFF	OFF	ON
2	OFF	OFF	ON	OFF
3	OFF	OFF	ON	ON
4	OFF	ON	OFF	OFF
5	OFF	ON	OFF	ON
6	OFF	ON	ON	OFF
7	OFF	ON	ON	ON
8	ON	OFF	OFF	OFF
9	ON	OFF	OFF	ON
10	ON	OFF	ON	OFF
11	ON	OFF	ON	ON
12	ON	ON	OFF	OFF
13	ON	ON	OFF	ON
14	ON	ON	ON	OFF
15	ON	ON	ON	ON

Communications Mode Settings (SRT2 Series Only)

The following communications modes are set with pin 2.

Pin 2	Communications mode	Communications distance	Communications baud rate	Communications cycle time
OFF	High-speed Communications Mode	100 m max.	750 kbps	0.5 or 0.8 ms
ON	Long-distance Communications Mode	500 m max.	93.75 kbps	4.0 or 6.0 ms

The communications mode settings using pin 2 only apply to SRT2-series Slaves and cannot be used with the SRT1-series Slaves, which operate in High-speed Communications Mode at all times.

Precautions for Correct Use

The baud rate of CompoBus/S slave unit shall be the same as the master unit baud rate. If not, communications will fail.

CompoNet

Set the node address.

(Sample illustration: CRT1-ID08)

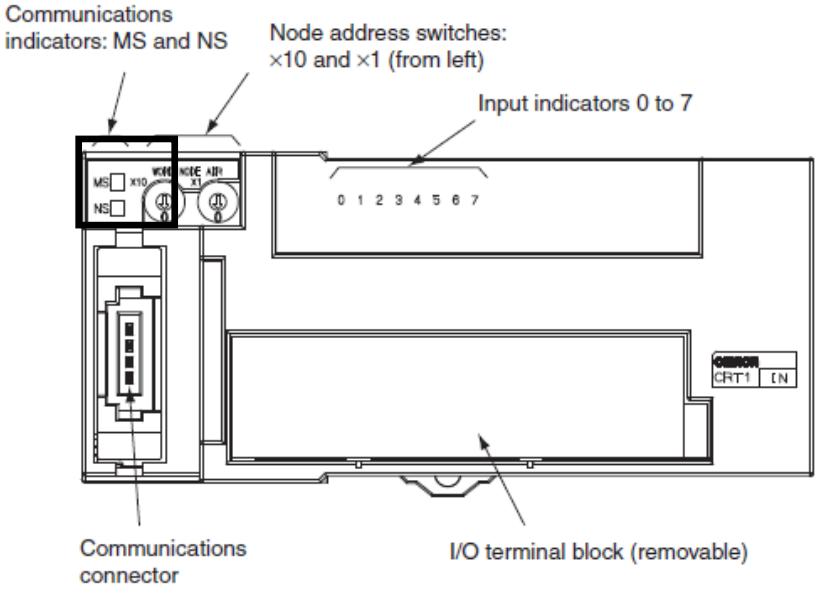

Setting the Node Address

The node address is set as a decimal number with the 10s digit set on the left rotary switch and the 1s digit set on the right rotary switch. (The maximum node address is 63.)

The setting on the rotary switches is read when power is turned ON.

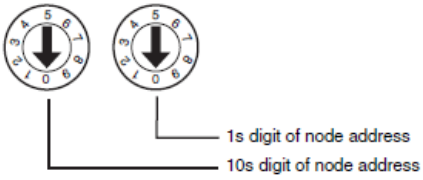

The baud rate of CompoNet slave unit follows that of master unit automatically. You do not have to set it.

4.2.4. Wiring

This section describes cable connections for the PLC and the master unit; for the master unit and slave units.

Series	Wiring
CompoBus/S	Refer to “3. CompoBus/S System Wiring” in “CompoBus/S OPERATION MANUAL (W266)” for details.
CompoNet	Refer to “4. Installation and Wiring” in “CS1W-CRM21/ CJ1W-CRM21 CompoNet Master Units OPERATION MANUAL (W456)” for details.

Series	Maximum Cable Length
CompoBus/S	**Maximum Cable Length** The main line length is the total length of the cable connecting the Master and the terminator at the farthest end of the system. The branch line length is the length of a cable connecting a Slave to the main line and the total branch line length is the sum of lengths of all of the branch lines in the system. When the system has no main line distinguished from the branch lines, the communications cable can be connected with no particular restrictions, provided that the total length of communications cable is a maximum of 200 m.

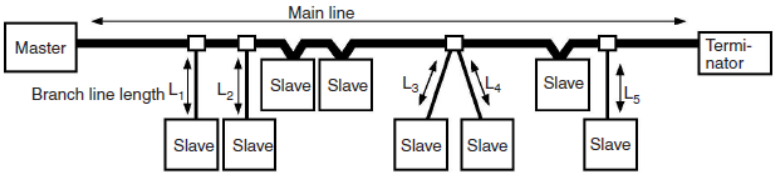

Total branch line length = $L_1 + L_2 + L_3 + L_4 + L_5$

The maximum main line, branch line, total branch line, and total cable lengths depend on the type of cable and number of Slaves being used, as shown in the following table.

Communication mode	Cable type	Cable length		
		Main line	Branch line	Total of branch lines
High-speed Communications Mode	2-conductor VCTF cable	100 m max.	3 m max.	50 m max.
	4-conductor VCTF cable	30 m max. (See note.)	3 m max.	30 m max. (See note.)
	Flat	30 m max. (See note.)	3 m max.	30 m max. (See note.)

Series	Maximum Cable Length
CompoNet	

Cable Types, Maximum Distances, and Number of Slave Units

This section provides specifications on the maximum cable length and the maximum number of connectable Slave Units for each type of cable. The cables and Units must be used within the specifications.

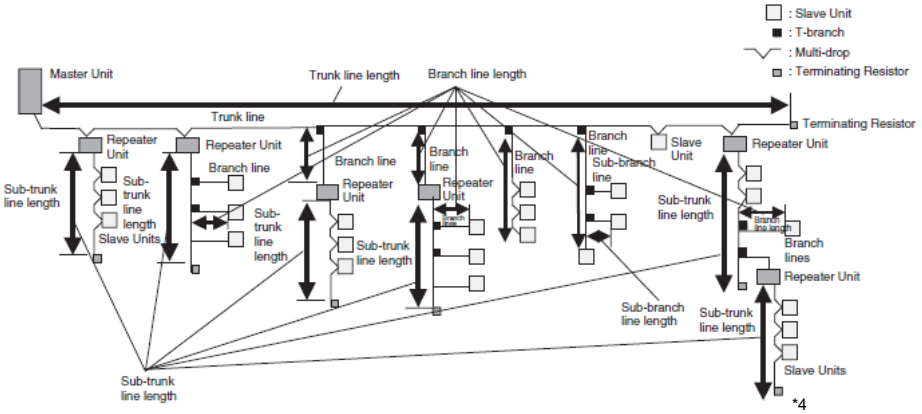

■ **Baud Rate of 1.5 Mbps**

Item	Round Cable I		Round Cable II, Flat Cable I, or Flat Cable II
	Without branch lines	With branch lines	
Length per trunk line or sub-trunk line (maximum length with two Repeater Units)	100 m (300 m)	30 m (90 m)	30 m (90 m)
Branch line length	Not supported (See note 2.)	2.5 m	2.5 m
Total branch line length	Not supported (See note 2.)	25 m	25 m
Restrictions on branch line locations	---	3 branches / m	3 branches / m
Number of Units per branch (See note 1.)		3	3
Maximum sub-branch line length		Not supported	0.1 m (See note 3.)
Total sub-branch line length		Not supported	2 m (See note 3.)
Number of Slave Units (including Repeater Units) per trunk line or sub-trunk line	32	32	32

Note
(1) This is the maximum number of Slave Units and Repeater Units combined that can be connected to a branch line by using multidrop connections and/or T-branching. T-branching creates a sub-branch.
(2) The trunk line does not support branching. The trunk line and sub-trunk lines support only multidrop connections.
(3) Branch lines support branching to sub-branch lines.

(4) When installing 30 m or longer wiring of a trunk line and sub-trunk line using cables except round cable I (w/o branch), you need repeater units. Up to 90 m wiring is possible.

■ **Baud Rate of 93.75 kbps**

Item	Round Cable I or II	Flat Cable I or II
Length per trunk line or sub-trunk line(maximum length with two Repeater Units)	500 m (1500 m)	Unrestricted wiring is enabled for a total length of 200 m.
Branch line length	6 m	
Total branch line length	120 m	
Restrictions on branch line locations	3 branches / m	
Number of Units per branch (See note.)	1	
Maximum sub-branch line length	---	
Total sub-branch line length	---	
Number of Slave Units (including Repeater Units) per trunk line or sub-trunk line	32	32

Note This is the maximum number of Slave Units and Repeater Units combined that can be connected to a branch line by using multidrop connections and/or T-branching. T-branching creates a sub-branch.

Round Cable I

Use a commercially available VCTF cable with two 0.75-mm^2 conductors (JIS C3306) that meets CompoNet specifications. Ask the cable manufacturer for products applicable to CompoNet.

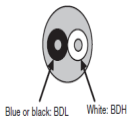

Round Cable II

Use a commercially available VCTF cable with four 0.75-mm^2 conductors (JIS C3306) that meets CompoNet specifications. Ask the cable manufacturer for products applicable to CompoNet.

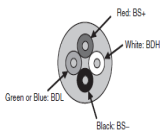

Series	System with Distinction between Trunk and Branch Lines
CompoBus/S	**System with Distinction between Main and Branch Lines** The following diagram shows a CompoBus/S System configuration in which the main line must be distinguished from the branch lines under either of the following conditions. • The system operates in High-speed Communications Mode. • The system operates in Long-distance Communications Mode with 2-conductor VCTF cable. 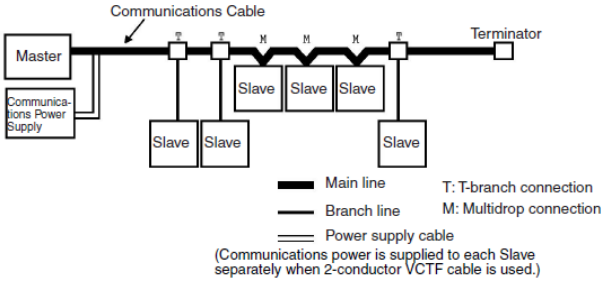
CompoNet	**Trunk Line-Branch Line Formation** With this wiring formation, the trunk line is differentiated from branch lines. There are restrictions on the number of branches and the number of Units that can be connected. 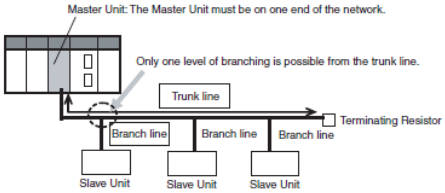

Series	System with No Distinction between Trunk and Branch Lines
CompoBus/S	**System with No Distinction between Main and Branch Lines** The following diagram shows a CompoBus/S System configuration in which no distinction is required between the main line and the branch lines under either of the following conditions. • The system operates in Long-distance Communications Mode with 4-conductor VCTF cable • The system operates in Long-distance Communications Mode with Special Flat Cable 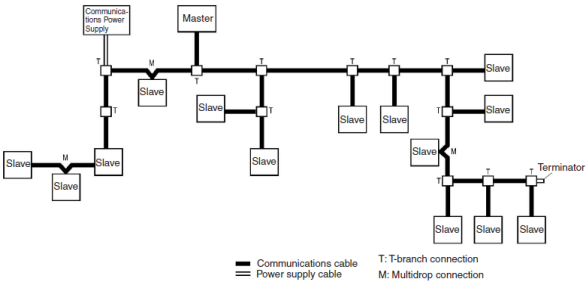
CompoNet	**Unrestricted Wiring Formation** With this wiring formation, there is no differentiation between the trunk line and branch lines. There are no wiring restrictions as long as the total cable length does not exceed 200 m. There is also no limit on the number of branches. 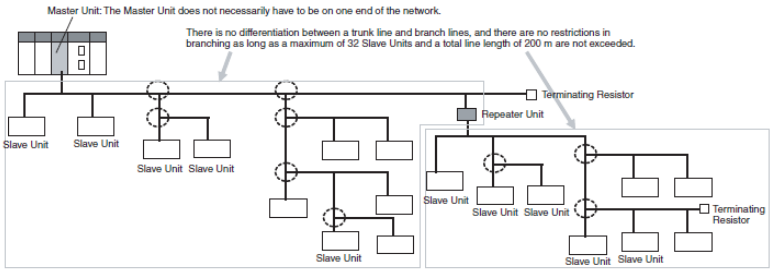

Restrictions in using CompoBus/S cables for a CompoNet system.

Trunk LINE-Branch LINE Formation

High-speed communication mode	CompoBus/S			CompoNet		Replacement restrictions	How to respond
		High-speed communication mode		No branchlines	With branchlines	–	
		750kbps		1.5Mbps		–	
		Max 32 units	Max 16 units	Max 32 units		–	
2-conductor VCTF cable	Trunk line Length	100m		100m	30m	In the case of wiring in MD, the trunk length is 100 m If a with branch line, the maximum trunk length is 30m	Possible to wire up to 90m by putting the repeater unit in the trunk line (Two Units)
	Branch line Length	3m		T branch impossible Multidrop only	2.5m	Maximum branch line length 2.5m.	Wire the maximum branch length 2.5m or less
	Total branch line Length	50m		–	25m	Total maximum branch line length 25m.	Wire the total maximum branch length 25m or less
	Number of Units per branch	1		–	3	–	
4-conductor VCTF cable	Trunk line Length	30m	100m	30m	30m	Even if the number is 16 or less, the maximum trunk length is 30m	Possible to wire up to 90m by putting the repeater unit in the trunk line (Two Units)
	Branch line Length	3m	3m	T branch impossible Multidrop only	2.5m	Maximum branch line length 2.5m.	Wire the maximum branch length 2.5m or less
	Total branch line Length	30m	50m	–	25m	Total maximum branch line length 25m.	Wire the total maximum branch length 25m or less
	Number of Units per branch	1	1		3	–	–
Special Flat Cable	Trunk line Length	30m	100m	100m	30m	The diversion use of the cable is not possible	Wire at 2-conductor VCTF 4-conductor VCTF cable or ComponNet Special Flat Cable
	Branch line Length	3m	3m	T branch impossible Multidrop only	2.5m		
	Total branch line Length	30m	50m	–	25m		
	Number of Units per branch	1	1		3		

※ The master unit is located at the trunk end

Trunk LINE-Branch LINE Formation

Long-distance communication mode	CompoBus/S		CompoNet	Replacement restrictions	How to respond
		Long-distance communication mode	Transmission rate	–	
		93.75kbps	93.75kbps	–	
		Max 32 units	Max 32 units	–	
2-conductor VCTF cable	Trunk line Length	500m	500m	–	
	Branch line Length	6m	6m	Restrictions on branch line locations: 3 branches / m	
	Total branch line Length	120m	120m	–	
	Number of Units per branch	1	1	–	

Unrestricted wiring Formation

Long-distance communication mode	CompoBus/S		CompoNet	Replacement restrictions	How to respond
4-conductor VCTF cable	Trunk line Length	Total length of communications cable :200m max.(with no distinction between main and branch lines)	Total length of communications cable :200m max.(with no distinction between main and branch lines)	–	
	Branch line Length			–	
	Total branch line Length			–	
	Number of Units per branch			–	
Special Flat Cable	Trunk line Length	Total length of communications cable :200m max.(with no distinction between main and branch lines)	Total length of communications cable :200m max.(with no distinction between main and branch lines)	The diversion use of the cable is not possible	Wire at 2-conductor VCTF 4-conductor VCTF cable or ComponNet Special Flat Cable
	Branch line Length				
	Total branch line Length				
	Number of Units per branch				

Sample Wiring with Power Supply

Series	2-core VCTF Cable
CompoBus/S	**Using 2-conductor VCTF Cable** Power cannot be supplied to the Slaves through 2-conductor VCTF cable. When a CompoBus/S System is being constructed with 2-conductor VCTF cable, each Slave must be supplied with power along a route separated from the VCTF cable. Furthermore, an I/O power supply must be provided for Slaves that require an I/O power supply. **Independent Power Supplies** 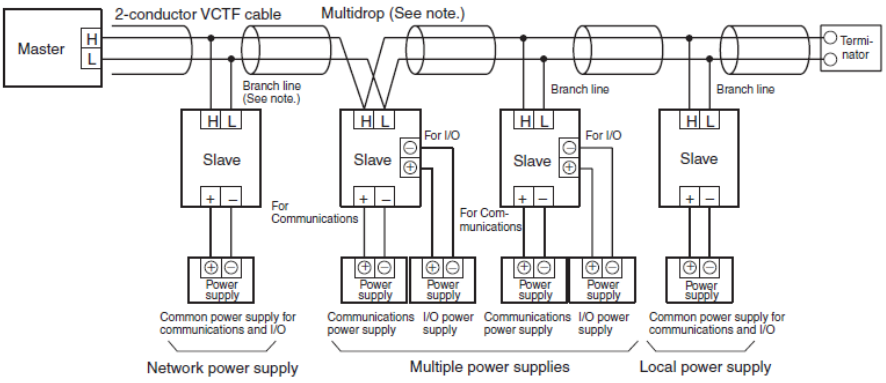 **Note** Both T-branch connections and multidrop connections are possible with each type of power supply.
CompoNet	**Round Cable I** When Round Cable I cables are used, the communications power cannot be supplied through the communications cables. The power must be supplied to each Slave and Repeater Unit through other cables. Furthermore, the I/O power must be supplied separately to the Slave Units which need I/O power, i.e., Slave Untis with a multi-power supply. There is no need, however, to provide an external communications power supply to the Master Unit. **Without Repeater Units** 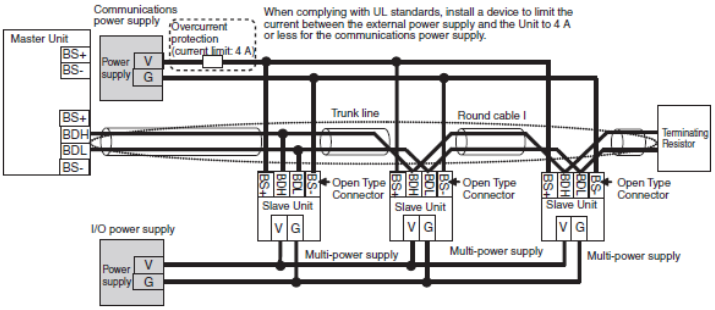

Sample Wiring with Power Supply

Series	4-core VCTF Cable/ Special Flat Cable
CompoBus/S	**Using 4-conductor VCTF or Special Flat Cable** Power can be supplied to the Slaves through 4-conductor VCTF or Special Flat Cable. When a CompoBus/S System is being constructed with 4-conductor VCTF or Special Flat Cable, the method used to supply power to the Slaves depends on the type of Slave being used. The following diagram shows an example of a CompoBus/S System connected with Special Flat Cable that uses each type of Slave. There is no difference in configuration when 4-conductor VCTF cable is used. 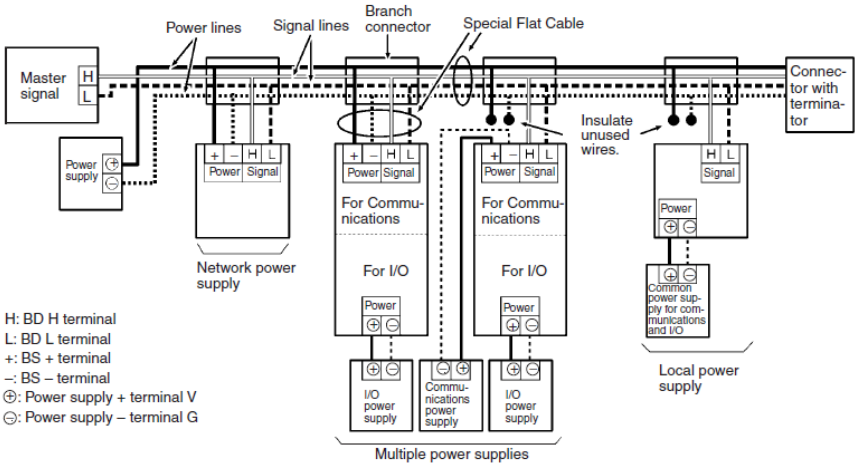
CompoNet	**Round Cable II, Flat Cable I, or Flat Cable II** The communications power to Slave Units is supplied through a Round Cable II, Flat Cable I or Flat Cable II cable. Therefore there is no need to provide a communications power supply for Slave Units separately. The communications power supply can be shared by all Slave Units within the same trunk line or sub-trunk line. The I/O power must be supplied separately to the Slave Units which need I/O power, i.e., Slave Units with a multi-power supply. **Without Repeater Units** 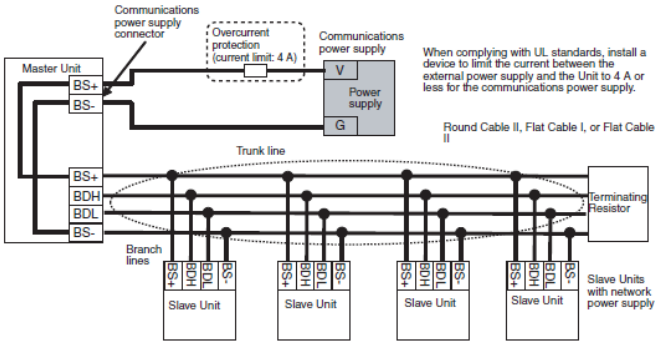

4.2.5. Starting the System and the Remote I/O Communications

Start the system and the remote I/O communications.
Both in CompoBus/S and CompoNet systems, when all the devices in networks are turned on, the remote I/O communications automatically start.

CompoBus/S	CompoNet
Confirm that device settings and wiring have been completed. Then turn on all the devices making up the CompoBus/S system. After the necessary power has been supplied, remote I/O communications start automatically.	Confirm that device settings and wiring have been completed. Then turn on all the devices making up the CompoNet system. After the necessary power has been supplied, remote I/O communications start automatically.

Precautions for Correct Use

Both in CompoBus/S and CompoNet systems, turn on slave units first in order to start communications immediately after turning on the master unit.

Precautions for Correct Use

When the I/O Communications Manual Start Mode has been selected in the CompoNet master unit device parameters, the remote I/O communications do not start automatically even after the PLC is turned on.
Turn on the Remote I/O Communications Startup Switch to start remote I/O communications.

Precautions for Correct Use

When the Slave Registration Function has been set in the CompoBus/S master unit, participation of all the registered slaves are checked if the registered slave participation monitoring time has passed after the master unit was turned on.
If a non-participating slave is found, the Slave Verification Error (Slave Missing) is issued and remote I/O communications do not start.

Precautions for Correct Use

When the Registration Table has been set in the master unit device parameters and the Registered Slave Unit Participation Standby Mode has been enabled, remote I/O communications do not start until all the registered slaves participate in the network, even though the power is turned on.

4.2.6. Operation Test

Check if the remote I/O communications work properly.

CompoBus/S	CompoNet
Confirm items listed below. If all of them are OK, the remote I/O communications are operating normally: - LEDs [RUN], [SD], and [RD] on the front panel of the master unit are on. - LEDs [ERH] and [ERC] on the front panel of the master unit are off. - LEDs [POWER] and [COMM] on the front panel of the slave unit are on. - LED [ERR] on the front panel of the slave unit is off. 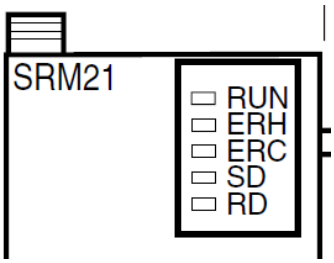 [CJ1W-SRM21 front panel LEDs] 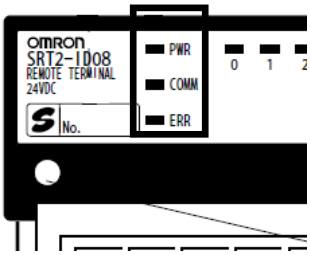 [SRT2-ID08 front panel LEDs]	Confirm items listed below. If all of them are OK, the remote I/O communications are operating normally: - LEDs on the front panel of the master unit lit: [MS] and [NS] are solid green; [SD] and [RD] are solid yellow. - The master unit 7-segment display shows any one of the following: [_0], [_1], [_2], or [_3]. - LEDs [MS] and [NS] on the front panel of the slave unit lit solid green. 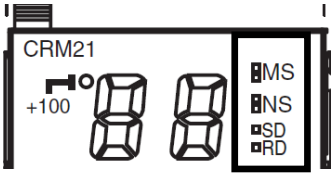 [CJ1W-CRM21 front panel LEDs] 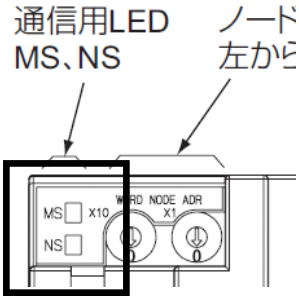 [CRT1-ID08 front panel LEDs]

4.2.7. Error Monitoring

This section describes how to monitor errors during remote I/O communications.

- Checking LEDs on the master unit front panel

CompoBus/S

Master unit LED status enables primary check.

Situation	Indicator status					Probable cause	Possible remedy
	RUN	ERH	ERC	SD	RD		
Normal communications	ON	OFF	OFF	ON	ON	---	---
PLC's power OFF	OFF	OFF	OFF	OFF	OFF	The PLC's power is OFF.	Turn the PLC's power supply ON.
						The correct voltage is not being supplied to the PLC.	Supply the correct voltage to the PLC.
						The Master Unit is faulty.	Replace the Master Unit.
						The PLC is faulty.	Replace the PLC (CPU Unit, Power Supply Unit).
Unit number setting error	OFF	ON	OFF	OFF	OFF	The same unit number is set on another Special I/O Unit, or the unit number is not within the specified range for Special I/O Units.	Set unit numbers that are unique and within the specified range.
						The Master Unit was restarted after changing the usable node number setting switch (DIP switch pin 1).	Restart the PLC and set to automatically create I/O tables.
						The CPU Unit is faulty.	Restart the PLC. If the same error occurs, replace the CPU Unit.
Master Unit error	OFF	OFF	ON	OFF	OFF	The Master Unit is faulty.	Replace the Master Unit.
CPU Unit error	---	ON	---	---	---	An error has occurred in the CPU Unit.	Remove the cause of the error, and restart the PLC. If the same error occurs, replace the CPU Unit.
Communications error	ON	---	ON	---	---	A Slave disconnection has been detected.	Remove the cause of the error. In communications stop mode, turn ON the power or restart the Unit after removing the cause of the error. In normal communications mode, the Unit will restart automatically.
						The Master Unit is faulty.	Restart the Master Unit. If the same error occurs, replace the Master Unit.
Verification error	ON	---	ON	ON	---	When the Slave registration function is used indicates detection of a Slave that is missing in the network or an unregistered Slave that is in the network.	When a Slave is missing, the Unit will restart automatically when the missing Slave is connected to the network. When an unregistered Slave is detected, restart the Master Unit after removing the unregistered Slave.

CompoNet

Master unit LED status enables primary check.

MS indicator	NS indicator	7-segment display	Item	Error history (hex)	Probable cause of error	Unit operation after error detection	Countermeasures
---	◎ Red	d9 ↓ yy ↓ zzz	Communications error	0374	A system disconnection was detected.	System operations continue. Each detected disconnection is registered in the error history. Participation of the disconnected Slave Unit is awaited. When there is no longer any cause of an error, normal operation is restored. (The NS indicator lights green.)	Either of the following may be the cause of the error. 1) Communications had to be continually retried for the applicable Slave Unit due to noise, until the specified number of retries was exceeded. 2) Responses to communications from the Master Unit are not possible because of a malfunction, line disconnection, or communications power supply interruption at the Slave Unit itself. Inspect the Slave Unit where the disconnection was detected, and remove the cause of the error. There is no need to restart the Master Unit.
---	◎ Red	d 0 ↓ yy ↓ zzz	Address duplication error	0376	An address duplication error was detected for a Slave Unit attempting to participate.	The duplication error is registered in the error history. All system operations continue.	A Slave Unit or Repeater Unit in the same network is set for the same node. Use the following procedure: 1) Turn OFF the power to the Master Unit and the Slave Unit. 2) Change the duplicate node number to a new value. 3) Turn the power back ON to the Master Unit and the Slave Unit.
---	◎ Red	E5	Illegal configuration error	0378	It was detected that the Slave Units and Repeater Units requesting to participate in the network exceeded the permitted number of Repeater Unit segments (two).	Subsequent Slave Unit participation is prohibited from the point where it is detected that the permitted number of Repeater Unit segments has been exceeded in the participation processing. Other system operations continue. The error is registered in the error history. After normal status is restored, the Unit recovers by being restarted.	The maximum number of Repeater Unit segments is registered to two in the Master Unit and cannot be changed. This error thus indicates that there are three or more Repeater Unit segments. Correct the wiring and restart the Master Unit.
---	◎ Red	d 5 ↓ yy ↓ zzz	Verification error (non-existent Slave Unit)	0370	It was detected that a Slave Unit registered in the Registration Table is not participating within a fixed time after power is turned ON to the Master Unit. The monitoring time is set using the CX-Integrator.	The error is registered in the error history. System operations all continue, and remote I/O operations start. Participation of the Slave Unit where the error occurred continues to be monitored. When Slave Unit participation is completed, normal status is restored. (The NS indicator lights green.)	If the error is not cleared, check the Slave Unit that is not participating.
---	◎ Red	d 6 ↓ yy	Verification error (unregistered Slave Unit)	0372	Participation of an unregistered Slave Unit was detected.	The error is registered in the error history. All other system operations continue, without the participation of the unregistered Slave Unit. Recovery is attained by restoring normal status and restarting the Unit.	Check and correct the status of the unregistered Slave Unit, and then restart the Master Unit.
---	◎ Red	A0	Communications have stopped due to a communications error.	0375	A communications error was detected while communications were set to be stopped when a communications error occurred.	The error is registered in the error history. System operations continue. Remote I/O communications with the Slave Units stop, and communications with the CPU Unit continue. There is no automatic recovery even after the cause of the error is removed. The Unit must be restarted to recover.	Check and eliminate the cause of the error, and then restart the Master Unit.

yy: Indicates the Slave Unit type, as shown below.

yy	Actual display	Slave Unit type
i	8C	Input (including inputs and outputs together)
o	8o	Output
bi	bC	Bit input
bo	bo	Bit output
r	8r	Repeater Unit

◎: Flashing

●: Not lit

---: Not applicable

zzz: Node address where the error occurred (2 digits decimal) (Note: The 100s digit is displayed with a dot.)

・ Checking the PLC memory status area

CompoBus/S	CompoNet
The data of communications errors and master unit status is stored in the special I/O unit DM area as Status Flag (1 word). First address of a special I/O unit DM area = D20000 CH + (Unit No. x 100) [Monitoring Items] - Completion of registration - Slave verification error (Slave missing) - Slave verification error (Unregistered slave in network) - Communications stop - Error occurring	The data of communications errors and master unit status is stored in the special I/O unit area as Status Flag (1 word). Allocating position differs according to the communications mode (No.0 - 2). First address of a special I/O unit area = 2000 CH + (Unit No. x 10) [Monitoring Items] - Communications stop - Verification error of registration table - Communications stop due to communications error - Duplicated slave address - Communications error of repeater - Duplicated repeater node address - Participation of all the registered slaves - Start of remote I/O communications - Permission for a ladder operation under the Registration Table Enabled Mode - Registration Table Mode - Representative warning status - Representative alarm status
Node status data regarding slave participation and communications errors after slave participation is stored in the special I/O unit area as Status Area. First address of a special I/O unit area = 2000 CH + (Unit No. x 10) [Status determined by ON/OFF of a bit] - Participation Flag ON: A slave is not participating in the communications (It has never participated). OFF: A slave is participating the communications (The bit stays ON after leaving off the communications) - Communications Error Flag ON: Communications are normal or a slave is	Node status data regarding slave participation and communications errors after slave participation is stored in the special I/O unit area as Participation/ Communications Error Flag. The number of occupied channels differs according to the communications mode (No.0 – 2). [Status determined by ON/OFF of a bit] Same as CompoBus/S

not participating in the communications. OFF: Communications error is occurring	

5. Terms and Definitions

Term	Description/ Definition
Remote I/O Communications	A CPU unit and slaves are constantly sharing the data. Connect them with communication cables and turn the power of a communication power supply to slaves and a PLC on. Then, communications and data sharing between the memory area of the CPU unit and slaves start automatically. All you have to do is to program a ladder that enables reading and writing to the area (allocation area in slave) where the data is shared constantly. However, reading and writing to a slave are conducted if the slave operates normally.
Messaging	Messaging is a function to control data transmission (e.g. time, error log) and reading/ writing particular information (e.g. forced set/ reset) between nodes on a CompoNet network when conditions are met. There are two types of messaging: FINS and Explicit.
Master Unit	It controls a network and implements I/O data transmission between a PLC and slave units. The network has only one master unit. It must be located at the end of a trunk line.
Slave Unit	It outputs the data received from the master unit via the network. Also it transmits the input IN-data to the master unit via the network.
Repeater Unit (For CompoNet only)	It is a relay unit used to extend the network: extension or branching of a trunk line. A repeater unit enables to expand connectability: - Cable extension - Additional connectable nodes - Long distance T-junction from the trunk/ sub-trunk line - Cable conversion: 2-core VCTF cable, dedicated flat cable, and dedicated flat cable with sheath

6. Appendix

Additional information regarding to the content of this guide is described in this chapter.

6.1. Example of Remote I/O Memory Area Replacement

6.1.1. Preconditions

	CompoBus/S	CompoNet
Unit No. of High-function I/O Unit	0	0
Setting for Connectable Node Address	Set the dip switch [SW1] position to OFF. The switch is located on the front panel of the master unit. (Connectable node address: IN0 – 7, OUT0 – 7) OUT: 8 CHs, IN: 8 CHs	Set the rotary switch [MODE] to [0]. The switch is located on the front panel of the master unit. (Connectable node address: IN0 – 7, OUT0 – 7) OUT: 8 CHs, IN: 8 CHs

6.1.2. Automatically Allocated Remote I/O Memory Area under the Preconditions Above

Note that assigned channel ranges are different.

Details of Memory Allocation: CompoBus/S
Remote I/O Memory Area ［OUT］2000 – 2003 CH ［IN］2004 – 2007 CH

I/O Allocations when Pin 1 Is OFF

When pin 1 is OFF and node addresses IN0 to IN7 and OUT0 to OUT7 (64 inputs/64 outputs max) are used, words are allocated to the Slaves for each node number as shown in the following diagram.

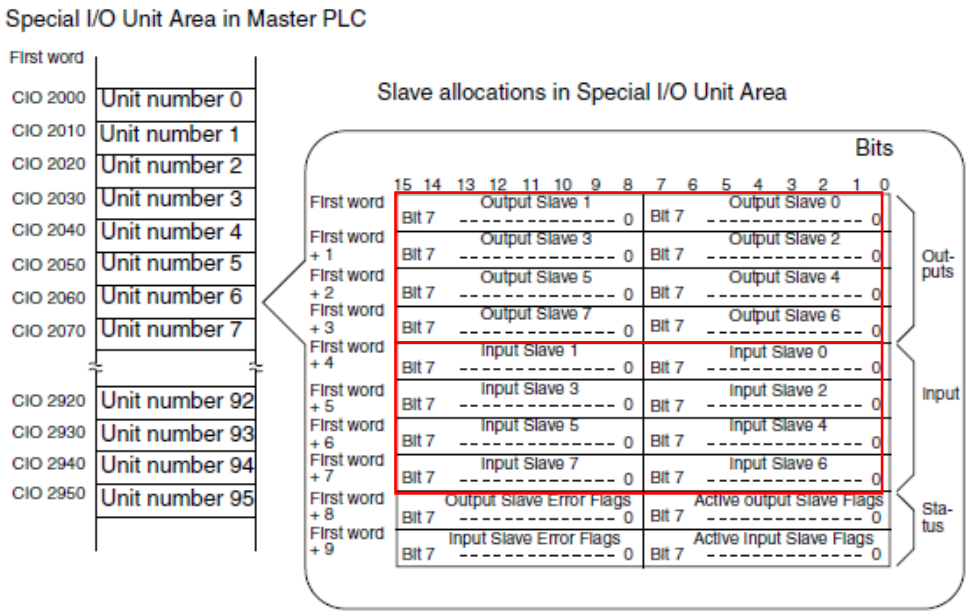

CompoNet

Word Slave Unit Data Allocation

Word Slave Units with no more than 16 points are allocated one word (i.e., the node address area for the node address set for the Unit). (See note.)

Note Slave Units with 8 points are also allocated one word. They use the lower byte of the word, and the upper byte remains not used.

Slave Units with more than 16 and no more than 32 points are allocated two words (i.e., the area for the node address set for the Unit plus next node address area). In the same way, below, multiple words are allocated (the set node address area and the following node address areas) to other Slave Units according to their sizes.

Note As long as the same words are not allocated to more than one Unit, the Input Area and Output Area with numerically the same node address can be allocated to Slave Units with different node addresses. (For example, OUT1 can be allocated to the 16 outputs for a Slave Unit set for node address 1, and IN1 can be allocated to the 16 inputs for an Expansion Slave Unit set for node address 0.)

Details of Memory Allocation: CompoNet

Remote I/O Memory Area

［OUT］2000 – 2007 CH

［IN］2008 – 2015 CH

Communications mode	Mode name	Allowable Slave Unit node addresses per Master Unit	Control points per Master Unit
0	Communications mode 0	Word Slave Units: 8 input and 8 output node addresses	Word Slave Units: 128 inputs and 128 outputs

Allocating Two Unit Numbers per Node (Communications Mode 0)

CIO 2000 + (10 × unit No.) to CIO 2019 + (10 × unit No.): Unit No. = 0 to 94

First allocated word	Unit number setting	
CIO 2000	Unit No. 0	
CIO 2010		Unit No. 1
CIO 2020	Unit No. 2	
CIO 2030		Unit No. 3
CIO 2040	Unit No. 4	
CIO 2050		Unit No. 5
CIO 2060	Unit No. 6	
CIO 2070		
:		
CIO 2920	Unit No. 92	
CIO 2930		Unit No. 93
CIO 2940	Unit No. 94	
CIO 2950		

Word address	Bit 15	
+0	[OUT0]	
+1	[OUT1]	
+2	[OUT2]	
+3	[OUT3]	
+4	[OUT4]	
+5	[OUT5]	
+6	[OUT6]	
+7	[OUT7]	
+8	[IN0]	
+9	[IN1]	
+10	[IN2]	
+11	[IN3]	
+12	[IN4]	
+13	[IN5]	
+14	[IN6]	
+15	[IN7]	
+16	Status	
+17	Parameters	
+18	Communications Error Flags: OUT0 to OUT7	Participation Flags: OUT0 to OUT7
+19	Communications Error Flags: IN0 to IN7	Participation Flags: IN0 to IN7

6.2. I/O Response Time

6.2.1. Minimum I/O Response Time in CompoBus/S

Sample calculation of the minimum I/O response time is shown here.

- Preconditions

Master Unit	CJ1W-SRM21
IN Slave	SRT1-ID08
OUT Slave	SRT1-OD08
Communication Mode	High-speed Mode
PLC Cycle Time	1 ms

- Minimum I/O response time calculation

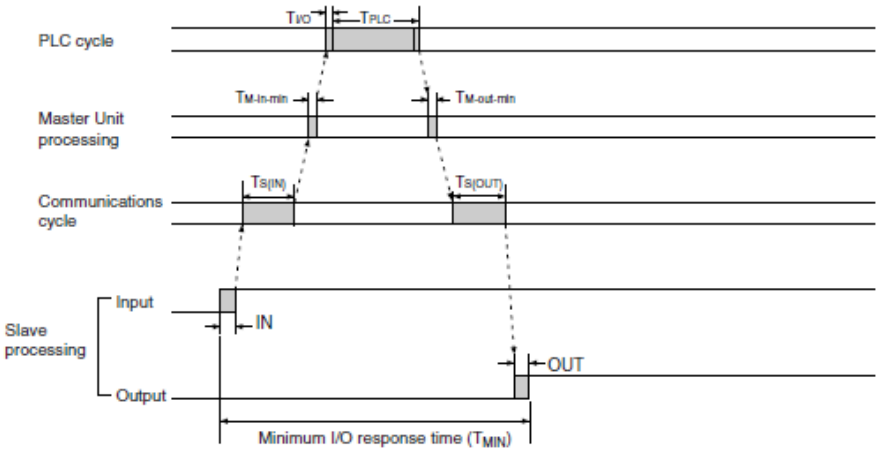

The minimum I/O response time is the total of the following terms:

$$T_{MIN} = IN + T_{S(IN)} + T_{M\text{-}in\text{-}min} + T_{I/O} + T_{PLC} + T_{M\text{-}out\text{-}min} + T_{S(OUT)} + OUT$$

- Minimum I/O response time

Item	Duration
IN	1.5 ms
$T_{S(IN)}$	20 μs
$T_{M\text{-}in\text{-}min}$	25 μs
$T_{I/O}$	120 μs
T_{PLC}	1 ms
$T_{M\text{-}out\text{-}min}$	45 μs
$T_{S(OUT)}$	15 μs
OUT	1.5 ms
Total	4.208 ms

Additional Information

Refer to “2-5 I/O Response Time Characteristics”, in “CompoBus/S OPERATIONAL MANUAL (W266)” for details.

6.2.2. Minimum I/O Response Time in CompoNet

Sample calculation of the minimum I/O response time is shown here.

- Preconditions

Master Unit	CJ1W-CRM21
IN Slave	CRT1-ID08
OUT Slave	CRT1-OD08
Communication Mode	No.0
Baud Rate	1.5M bps
PLC Cycle Time	1 ms

- Minimum I/O response time calculation

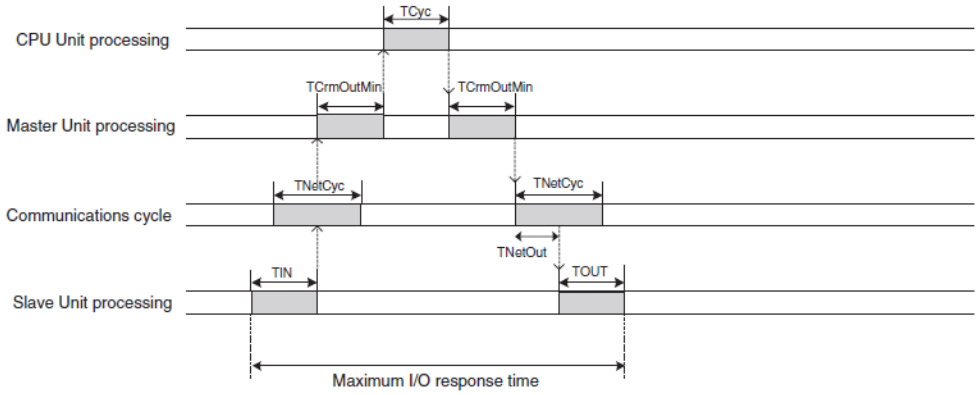

■ **Formula for Word Slave Minimum I/O Response Time**

TIN + TCrmInMin + Tcyc + TCrmOutMin + TNetOut + TOUT

- Minimum I/O response time

Item	Duration
TIN	1.5 ms
TCminInMin	0.023 ms
Tcyc	1 ms
TCrmOutMin	0.05 ms
TNetOut	0.046 ms
TOUT	1.5 ms
Total	4.119 ms

Additional Information

Refer to “5-3-1 I/O Response Time” in “CS1W-CRM21/ CJ1W-CRM21 CompoNet Master Units OPERATIONAL MANUAL (W456)” for details.

6.2.3. Maximum I/O Response Time in CompoBus/S

Sample calculation of the maximum I/O response time is shown here.

- Preconditions

Master Unit	CJ1W-SRM21
IN Slave	SRT1-ID08
OUT Slave	SRT1-OD08
Communication Mode	High-speed mode
PLC Cycle Time	1 ms

- Maximum I/O response time calculation

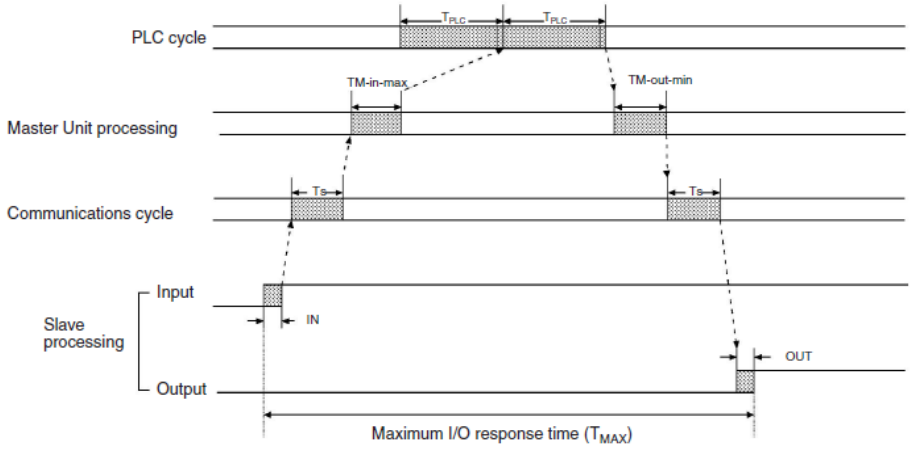

The maximum I/O response time is the total of the following terms:

$T_{MAX} = IN + T_S + T_{M\text{-}in\text{-}max} + T_{PLC} \times 2 + T_{M\text{-}out\text{-}max} + T_S + OUT$

- Maximum I/O response time

Item	Duration
IN	1.5 ms
T_S	500 µs
$T_{M\text{-}in\text{-}max}$	220 µs
T_{PLC}	1 ms x 2
$T_{M\text{-}out\text{-}max}$	100 µs
T_S	500 µs
OUT	1.5 ms
Total	6.32 ms

Additional Information

Refer to “2-5 I/O Response Time Characteristics”, in “CompoBus/S OPERATIONAL MANUAL (W266)” for details.

6.2.4. Maximum I/O Response Time in CompoNet

Sample calculation of the maximum I/O response time is shown here.

- Preconditions

Master Unit	CJ1W-CRM21
IN Slave	CRT1-ID08
OUT Slave	CRT1-OD08
Communication Mode	No.0
Baud Rate	1.5M bps
PLC Cycle Time	1 ms

- Maximum I/O response time calculation

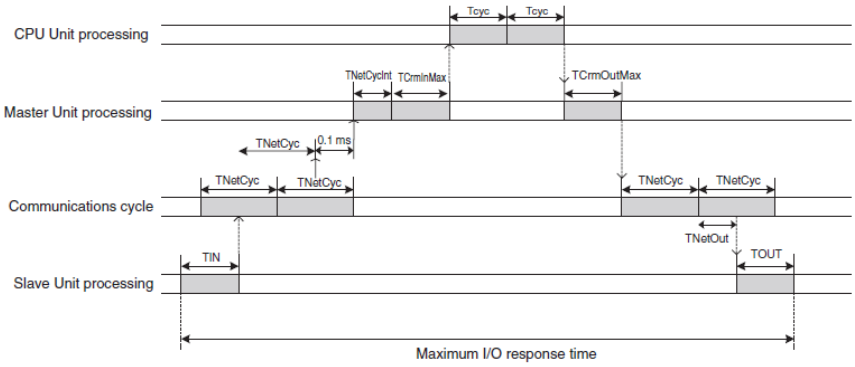

■ **Formula for the Maximum I/O Response Time for a Word Slave Unit**

TIN + TNetCyc×2 + 0.1ms + TNetCycInt + TCrmInMax + Tcyc×2 + TCrmOutMax + TNetOut + TOUT

- Maximum I/O response time

Item	Duration
TIN	1.5 ms
TNetCyc (w/o messaging)	1.1 ms x 2
—	0.1 ms
TNetCycInt	0.6 ms
TCrmInMax	0.26 ms
Tcyc	1 ms x 2
TCrmOutMax	0.086 ms
TNetOut	0.121 ms
TOUT	1.5 ms
Total	8.367 ms

Additional Information

Refer to “5-3-1 I/O Response Time” in “CS1W-CRM21/ CJ1W-CRM21 CompoNet Master Units OPERATIONAL MANUAL (W456)” for details.

Note: Do not use this document to operate the Unit.

OMRON Corporation **Industrial Automation Company**
Tokyo, JAPAN
Contact: www.ia.omron.com

Regional Headquarters
OMRON EUROPE B.V.
Wegalaan 67-69, 2132 JD Hoofddorp
The Netherlands
Tel: (31)2356-81-300/Fax: (31)2356-81-388

OMRON ELECTRONICS LLC
2895 Greenspoint Parkway, Suite 200
Hoffman Estates, IL 60169 U.S.A
Tel: (1) 847-843-7900/Fax: (1) 847-843-7787

OMRON ASIA PACIFIC PTE. LTD.
No. 438A Alexandra Road # 05-05/08 (Lobby 2),
Alexandra Technopark,
Singapore 119967
Tel: (65) 6835-3011/Fax: (65) 6835-2711

OMRON (CHINA) CO., LTD.
Room 2211, Bank of China Tower,
200 Yin Cheng Zhong Road,
PuDong New Area, Shanghai, 200120, China
Tel: (86) 21-5037-2222/Fax: (86) 21-5037-2200

Authorized Distributor:

© OMRON Corporation 2019 All Rights Reserved.
In the interest of product improvement,
specifications are subject to change without notice.

Cat. No. P142-E1-01 0419 (0419)