Code Reader Group Catalog

Total solution from recognition to print quality verification

1D / 2D Symbols and Direct Part Marks

Linear (1D) barcodes have been in commercial use since the 1970s and are the most common symbologies used for automatic identification. Increasing numbers of manufacturers are using two-dimensional (2D) symbols, such as Data Matrix, that offer greater placement flexibility and increased data capacity.

Machine-readable symbols generally fall into the categories of linear barcodes, stacked symbols, 2D symbols and Optical Character Recognition (OCR) fonts.

OMRON Microscan provides fast, reliable reading solutions for 1D and 2D Symbology Standards in the right and OCR. Our products read any linear barcodes or 2D symbols printed or marked by any means, and verify them to industry standards.

Note: OMRON's F430-F and F420-F Smart Cameras provide Optical Character Recognition (OCR). The code readers in this catalog do not provide OCR.

LINEAR BARCODES

Code 128

Code 39

Pharmacode

Code 93

Interleaved 2 of 5

UPC

JAN/EAN

STACKED SYMBOLOGIES

PDF417

GS1 DataBar (Stacked)

GS1 DataBar (Composite)

Micro PDF417

2D SYMBOLOGIES

Data Matrix

QR Code

Aztec Code

DotCode

Note: symbologies are not to scale.

1D and 2D Symbology Standards

- **ISO / IEC 15416**
  1D Print Quality Standard
- **ISO / IEC 15415**
  2D Print Quality Standard
- **Automotive Industry Action Group: AIAG B-4**
  Parts Identification and Tracking
- **U.S. Department of Defense: IUID MIL-STD-130**
  Permanent and Unique Item Identification
- **Electronics Industry Association: EIA 706**
  Component Marking
- **Clinical / Laboratory Standards Institute: AUTO2-A2**
  Bar Codes for Specimen Container Identification
- **ISO / IEC 16022**
  International Symbology Specification
- **ISO / IEC 15434**
  Symbol Data Format Syntax
- **Society of Aerospace Engineers: AS9132**
  Data Matrix Quality Requirements For Part Marking
- **AIM DPM / ISO 29158**
  Direct Part Mark Quality Guideline

NOTE: Symbologies on this page are not shown to scale and are not intended for testing purposes.

DIRECT PART MARKS

Direct part marks (DPM) are typically 2D Data Matrix symbols permanently marked by such methods as dot peen or laser / chemical etch onto substrates including metal, plastic, rubber or glass. OMRON Microscan offers a comprehensive family of readers and verifiers with illumination and decode algorithms specifically designed for difficult direct part marks.

Thermal print on foil

Dot peen on metal

Laser etch on metal

Inkjet on ABS plastic

Barcode Verification and Label Inspection

Legible, accurate barcodes and text have never been more important than they are today. Inconsistencies in print quality can lead to process inefficiencies and downtime; unreadable barcodes may require re-labeling, re-scanning, or even manual entry of critical information by a human operator.
Inconsistent quality may also result in expensive vendor non-compliance fines and other penalties, plus damage the labeled product's perceived quality.

Readability of barcodes is determined by how well a barcode reader can decode the data stored in the symbol.
Understanding the primary reasons for decoding failures can save operators valuable time and effort when diagnosing reading issues. Once the cause of barcode unreadability is defined, it can be addressed by taking simple, preventative measures.

OMRON Microscan's barcode verifiers are embedded solutions that include camera, software, and precision illumination specifically designed for the verification of 1D / 2D codes and direct part marks to ISO / IEC standards.

Benefits of Barcode Verification Systems

- Comply with symbol quality industry standards and directives
- Maximize efficiency of your manufacturing process
- Control quality in real time as you verify the output from your printer or code marking equipment
- Minimize returned goods due to bad labels
- Increase customer satisfaction
- Produce informative verification reports

THE IMPORTANCE OF VERIFICATION

Automated data capture is critical to a company's success, and the results of scanning failure can have a serious impact. Without verification, bad barcodes are not identified until they are unreadable. By the time a bad barcode is identified, thousands of poor-quality barcodes may have already escaped down the line. With verification, bad barcodes are prevented from being applied to the product, eliminating the chance for future failures.

WITHOUT VERIFICATION

Barcode Quality Over Time:
Using a Reader to Check Quality

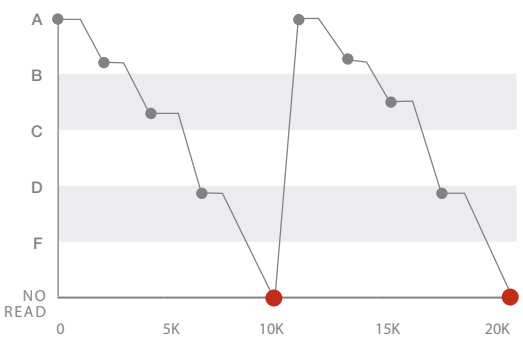

Number of Parts Marked / Labeled

WITH VERIFICATION

Barcode Quality Over Time:
Using a Verification Solution to Check Quality

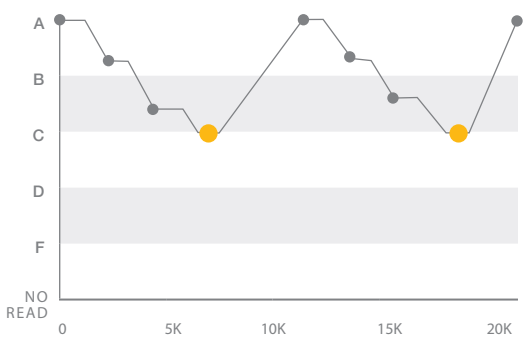

Number of Parts Marked / Labeled

A wide range of products to suit your application

1D / 2D Code Recognition

Multi Code Readers

OMRON Microscan's multi code readers combine compact, easy-to-embed design with the ability to read 2D codes and linear barcodes. They also provide reliable reading of direct part marks (DPM) that are being increasingly used to meet growing demands for traceability.

MicroHAWK V430-F series

Multi code reader with autofocus can reliably read codes at different distances.

MicroHAWK V420-F series

The same reading ability as the V430-F Series but different communication interfaces.

MicroHAWK V330-F series

Compact multi code reader offers flexibility in installation.

MicroHAWK V320-F series

The same reading ability as the V330-F Series but different communication interfaces.

Autofocus	Yes	Yes	No	No
IP Rating	IP65	IP54	IP40	IP40
Connectivity	Ethernet TCP / IP EtherNet / IP™ PROFINET	RS-232C USB Ethernet Via USB	Ethernet TCP / IP EtherNet / IP™ PROFINET	RS-232C Ethernet Via USB
Light	Built-in, expanded, external strobe signal	Built-in, expanded, external strobe signal	Built-in	Built-in
	P.6	P.20	P.30	P.36

Handheld Code Readers

From simple data tracking for individual management to reading difficult direct part markings, Omron Microscan offers a lineup to meet a wide range of traebility needs.

HS-360X series

Ultra-Rugged Direct Part Mark Handheld Reader

V410-H series

Highly advanced handheld code reader characterized by its broad reading range that can be used in many different applications.

IP Rating	IP65/67	IP52
Wired or Wireless	Wired or Wireless	Wired
Light	Warm White LEDs and Red LEDs	XD: Warm White LEDs SR: Red LEDs
X-Mode Decode *2 Algorithms	✓	XD: ✓ SR: -
Connectivity	USB1.1, RS-232	USB, RS-232
	P.42	P.48

*1. Use isopropyl alcohol 70%.
*2. X-mode is an algorithm suitable for reading DPM.

Laser Barcode Readers

From small products for embedded OEM applications to rugged readers for industrial manufacturing environments, OMRON Microscan offers a wide range of quality products to read linear barcodes and stacked symbols, with features such as high-speed decoding, wide field of view, symbol reconstruction and aggressive decode algorithms.

MS-3 series

Compact raster laser barcode reader offers high-performance decoding and wide scan angle at close range.

QX-830 series

Compact laser barcode reader features QX platform, symbol reconstruction and Ethernet protocols.

QX-870 series

Programmable sweeping raster laser barcode reader with QX platform, symbol reconstruction and Ethernet protocols.

Read Range	51 to 254mm	25 to 762mm	25 to 762mm
Scans / Second	Up to 1000	300 to 1400	300 to 1400
Power	5 VDC	10 to 28 VDC	10 to 28 VDC
Sensor	Laser diode	Laser diode	Laser diode
IP Rating	IP54	IP54	IP65
Connectivity	RS-232, RS-422 / 485 (up to 115.2k), Keyboard Wedge, USB	RS-232, RS-422 / 485 Ethernet TCP / IP or EtherNet / IP™	RS-232, RS-422 / 485 Ethernet TCP / IP or EtherNet / IP™

P.56 P.62 P.68

Print Quality Verification

Barcode Verification Systems

OMRON Microscan's LVS® Barcode Verifiers are fully-integrated off-line solutions designed for the verification of 1D and 2D symbols and direct part marks to application standards such as GS1, HIBC, USPS and ISO / IEC 15415 / 15416. Barcode Verification Kits offer flexible integration options for off-line to symbology standards or user-defined parameters.

LVS-9510 series

All-in-one desktop verifier for off-line ISO / IEC barcode verification.

LVS-958□ series

All-in-one handheld verifier for flexible verification of multiple printed 1D / 2D symbols and direct part marks (DPM). Can be used with a tablet for portability.

1D / 2D	✓	✓
DPM		✓
GS1 Data	✓	✓
GS1 Certified Manage	✓	✓
Permissions	✓	✓
Field of View	Varies by model	Standard: Horizontal 76 mm, Vertical 57 mm DPM: 44 × 44 mm DPM-HD: 33 × 33 mm

P.74 P.78, 82

Auto Focus Multi Code Reader

MicroHAWK V430-F series

Auto Focus Multi Code Reader

The new V430-F Series offers advanced decode algorithms and improved ruggedness.
The long-range model for long-distance reading and improved light model ideal for DPM expand the range of auto focus multi code readers.

Refer to the V430-F series datasheet (Cat. No. Q274) for details.

Easy to integrate

Application in automotive industry

Application in digital industry

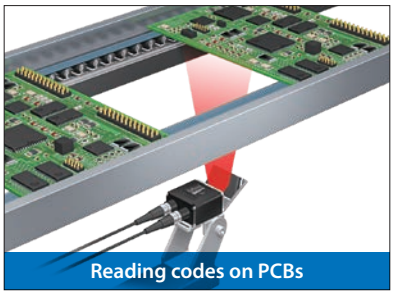

Application in F&B/pharma industry

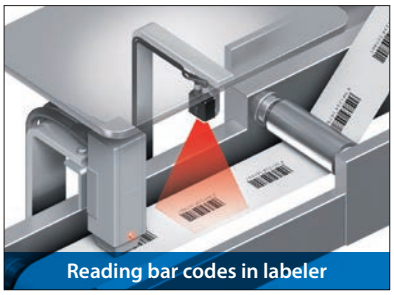

Long life autofocus

Liquid lens for unlimited autofocus

Code readers using a mechanical focus mechanism generally break due to deterioration of the drive mechanism or motor when they perform autofocus tens of thousands of times. The V430-F Series, on the other hand, uses a liquid lens that does not need a drive mechanism or motor, providing unlimited autofocus and long life.

The liquid lens can fiexibly change its focal length by applying voltage to change the internal oil and water shape. (a in right figure)
In addition, the V430-F Series precisely focuses on objects using the code search algorithm. (b in right figure)

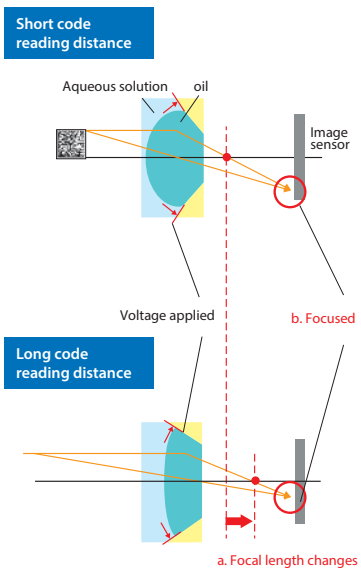

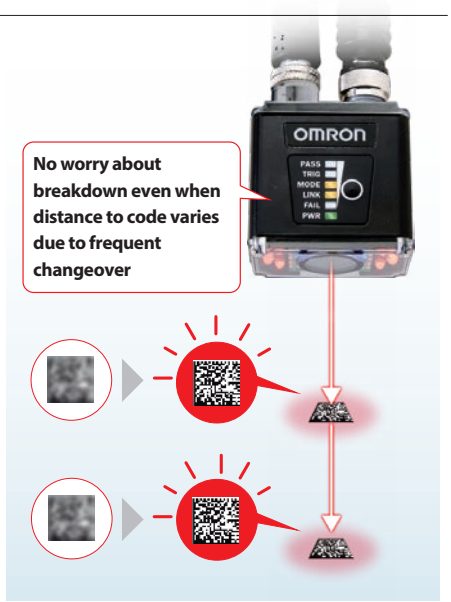

Auto Focus Multi Code Reader MicroHAWK V430-F series

Easy troubleshooting

Quick troubleshooting from web browser

The V430-F Series has pre-installed software for setup. There is no software to install or update.
You can easily troubleshoot using a PC or tablet with the browser-based interface.

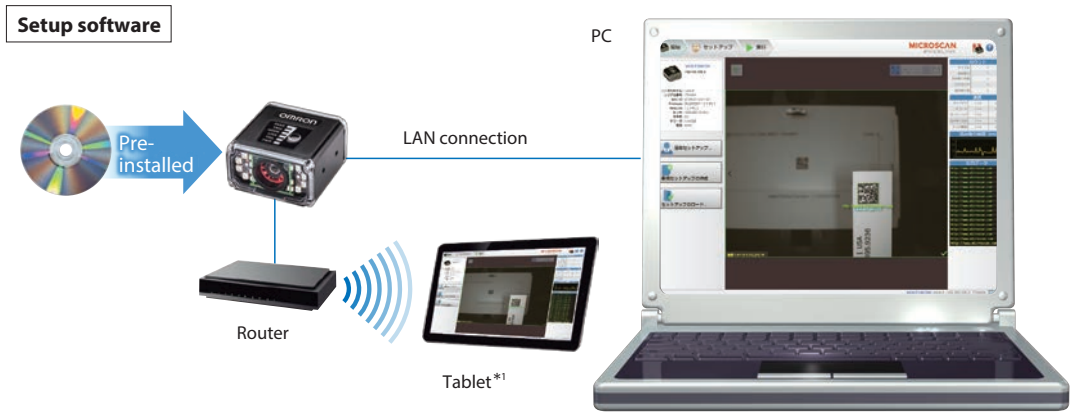

*1. The tablet must be connected to a wireless LAN.

Easy replacement of dirty window

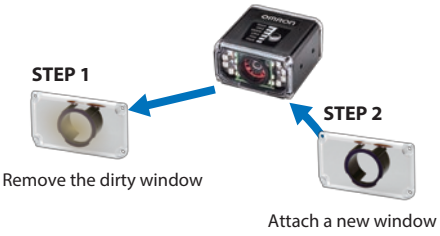

Print Quality Grading function to avoid problems

This function enables an in-line check of the relative quality change and the parameter where the change occurred.

Applicable standards	ISO/IEC 15415 ISO/IEC 15416 ISO/IEC TR29158 (AIM DPM -1-2006) *2 ISO/IEC 16022

*2. Data Matrix only.

New models with improved functionality joined the V430-F Series.
Check the table below and use the new model.

	Old model	New model
Code Reader	V430-F000W50C	V430-F000W50C-SWX
	V430-F000M50C	V430-F000M50C-SWX
	V430-F000W12M	V430-F000W12M-SRX
	V430-F000M12M	V430-F000M12M-SRX
	V430-F000N12M	V430-F000N12M-SRX
	V430-F050M03M	V430-F050M03M-SRX
	V430-F081M03M	V430-F081M03M-SRX
	V430-F102M03M	V430-F102M03M-SRX
Cable	V430-W2-3M	V430-WQR-3M *

* The new model has the same functions as the old model. The model number was changed due to the expansion of the lineup.

Auto Focus Multi Code Reader MicroHAWK V430-F series

Ordering Information

Code Readers

Categories:

1. Fixed Focus Camera

a.) V430-F Monochrome Fixed Focus Camera
b.) V430-F Color Fixed Focus Camera
c.) V430-F 1.2 MP Monochrome Fixed Focus Camera with Narrow Lens

2. Autofocus Camera

a.) V430-F 0.3 MP Monochrome Autofocus Camera (50 - 300 mm)
b.) V430-F 1.2 MP Monochrome Autofocus Camera (50 - 300 mm for Wide and Medium Lens, 40 - 150 mm for Narrow Lens)
c.) V430-F Color Autofocus Camera (50 - 300 mm)
d.) V430-F 1.2 MP Monochrome Autofocus Camera with Ring Light (50 – 300 mm for Medium Lens, 40 - 150 mm for Narrow Lens)
e.) V430-F 1.2 MP Monochrome Long Range Autofocus Camera (75 - 1160 mm)

1a) V430-F Monochrome Fixed Focus Camera: Valid Combinations

V430-F[XXX][Y][ZZZ]-[L][C][P]

Key	Classification	Code	Meaning
XXX	Focus Distance (mm)	050	Fixed Focus at 50 mm
		064	Fixed Focus at 64 mm
		081	Fixed Focus at 81 mm
		102	Fixed Focus at 102 mm
		133	Fixed Focus at 133 mm
		190	Fixed Focus at 190 mm
		300	Fixed Focus at 300 mm
Y	Lens	W	Wide Field of View - 5.2 mm Focal Length Lens
		M	Medium Field of View – 7.7 mm Focal Length Lens
ZZZ	Sensor	03M	752 x 480 (0.3 MP) Pixel, Mono Sensor, Global Shutter
		12M	1280 x 960 (1.2 MP) Pixel, Mono Sensor, Global Shutter
L	Light Type	N	No Outer Light
		S	Standard Outer Light
C	Light Color	N	No Outer Light
		R	Red
		W	White
P	Software License	P	High Speed, Plus Mode
		X	High Speed, X-Mode

1b) V430-F 5.0 MP Color Fixed Focus Camera: Valid Combinations

Note: 5 MP Color cameras are available with No Outer Light or White Light options only.

V430-F[XXX][Y]50C-[L][C][P]

Key	Classification	Code	Meaning
XXX	Focus Distance (mm)	050	Fixed Focus at 50 mm
		064	Fixed Focus at 64 mm
		081	Fixed Focus at 81 mm
		102	Fixed Focus at 102 mm
		133	Fixed Focus at 133 mm
		190	Fixed Focus at 190 mm
		300	Fixed Focus at 300 mm
Y	Lens	W	Wide Field of View - 5.2 mm Focal Length Lens
		M	Medium Field of View – 7.7 mm Focal Length Lens
L	Light Type	N	No Outer Light
		S	Standard Outer Light
C	Light Color	N	No Outer Light
		W	White
P	Software License	P	High Speed, Plus Mode
		X	High Speed, X-Mode

1c) V430-F 1.2 MP Monochrome Fixed Focus Camera with Narrow Lens: Valid Combinations

Note: Fixed Focus Narrow lens option available for 1.2 MP Mono camera only.

V430-F[XXX]N12M-[L][C][P]

Key	Classification	Code	Meaning
XXX	Focus Distance (mm)	064	Fixed Focus at 64 mm
		400	Fixed Focus at 400 mm
L	Light Type	N	No Outer Light
		S	Standard Outer Light
C	Light Color	N	No Outer Light
		R	Red
		W	White
P	Software License	P	High Speed, Plus Mode
		X	High Speed, X-Mode

2a) V430-F 0.3 MP Monochrome Autofocus Camera (50 - 300 mm): Valid Combinations

V430-F000[Y]03M-[L][C][P]

Key	Classification	Code	Meaning
Y	Lens	W	Wide Field of View - 5.2 mm Focal Length Lens
		M	Medium Field of View – 7.7 mm Focal Length Lens
L	Light Type	N	No Outer Light
		S	Standard Outer Light
C	Light Color	N	No Outer Light
		R	Red
		W	White
P	Software License	P	High Speed, Plus Mode
		X	High Speed, X-Mode

2b) V430-F 1.2 MP Monochrome Autofocus Camera (50 - 300 mm for Wide and Medium, 40 – 150 mm for Narrow): Valid Combinations

V430-F000[Y]12M-[L][C][P]

Key	Classification	Code	Meaning
Y	Lens	W	Wide Field of View - 5.2 mm Focal Length Lens
		M	Medium Field of View – 7.7 mm Focal Length Lens
		N	Narrow Field of View – 16 mm Focal Length Lens
L	Light Type	N	No Outer Light
		S	Standard Outer Light
C	Light Color	N	No Outer Light
		R	Red
		W	White
P	Software License	P	High Speed, Plus Mode
		X	High Speed, X-Mode

2c) V430-F 5.0 MP Color Autofocus Camera (50 - 300 mm): Valid Combinations

Note: Narrow Autofocus lens option not available for color camera.

V430-F000[Y]50C-[L][C][P]

Key	Classification	Code	Meaning
Y	Lens	W	Wide Field of View - 5.2 mm Focal Length Lens
		M	Medium Field of View – 7.7 mm Focal Length Lens
L	Light Type	N	No Outer Light
		S	Standard Outer Light
C	Light Color	N	No Outer Light
		W	White
P	Software License	P	High Speed, Plus Mode
		X	High Speed, X-Mode

Auto Focus Multi Code Reader MicroHAWK V430-F series

2d) V430-F 1.2 MP Monochrome Autofocus Camera with Ring Light (50 - 300 mm for Medium, 40 – 150 mm for Narrow): Valid Combinations

Note: Ring Light version is available for Autofocus, Medium, and Narrow lens, 1.2 MP Monochrome camera only.

V430-F000[Y]12M-R[C]X

Key	Classification	Code	Meaning
Y	Lens	M	Medium Field of View – 7.7 mm Focal Length Lens
		N	Narrow Field of View – 16 mm Focal Length Lens
C	Light Color	R	Red
		W	White

2e) V430-F 1.2 MP Monochrome Long Range Autofocus Camera (75 - 1160 mm): Valid Combinations

Note: Autofocus Long Range lens option available for 1.2 MP Monochrome camera only.

V430-F000L12M-[L][C][P]

Key	Classification	Code	Meaning
L	Light Type	N	No Outer Light
		S	Standard Outer Light
C	Light Color	N	No Outer Light
		R	Red
		W	White
P	Software License	P	High Speed, Plus Mode
		X	High Speed, X-Mode

Mounting Options

Type	Model
L Bracket Adjustable Angle Mounting Kit	**V430-AM0**
1/4-20 Camera Mounting Block Kit	**V430-AM1**
4" (102 mm) Ram Mount Stand	**V430-AM2**
APG Pan and Tilt Camera Mount	**V430-AM3**
Nylon Screw and Washer Electrical Isolation Mounting Kit	**V430-AM4**
MS-4 / MINI to V/F4XX-F Adapter Plate	**V430-AM5**
Smart Ring Light to V/F4XX-F Mounting Bracket	**V430-AM6**
QX / Vision HAWK to V/F4XX-F Adapter Plate	**V430-AM7**

Optics Options

Type	Model
Front Window Installation Kit	**V430-AF10**[*1]
Diffuser Installation Kit	**V430-AF11**[*1]
Polarizer Installation Kit	**V430-AF12**[*1]
Right Angle Mirror Installation Kit	**V430-AF3**
YAG Filter Installation Kit	**V430-AF4**
ESD-Safe Window Installation Kit	**V430-AF5**
Red Filter Installation Kit	**V430-AF6**
Blue Filter Installation Kit	**V430-AF7**

*1. The accessories V430-AF10, V430-AF11, and V430-AF12 are shown in relation to MicroHAWK V4□0-F□□□□□□□-□□□ code readers in this datasheet.
Previous-generation MicroHAWK V4X0-F□□□□□□□ code readers are compatible with accessory part numbers V430-AF0, V430-AF1, and V430-AF2. Please select the correct accessory from the table based on your code reader part number format.

Accessory	Prior Code Reader V430-F□□□□□□□-□□□	New Code Reader V430-F□□□□□□□
Front Window Installation Kit	**V430-AF10**	**V430-AF0**
Diffuser Installation Kit	**V430-AF11**	**V430-AF1**
Polarizer Installation Kit	**V430-AF12**	**V430-AF2**

Lighting Options

Type	Model
Red Light Installation Kit	**V430-ALR**
White Light Installation Kit	**V430-ALW**
Blue Light Installation Kit	**V430-ALB**
IR Light Installation Kit	**V430-ALI**

Optics Options (V430-F Window Kits)

Type	Model
Front Window Installation Kit	**V430-AF0R**
Diffuser Installation Kit	**V430-AF1R**
Polarizer Installation Kit	**V430-AF2R**

Lighting Options (V430-F Ring Light Kits)

Type	Model
Red Ring Light Installation Kit	**V430-ALRR**
White Ring Light Installation Kit	**V430-ALWR**
Blue Ring Light Installation Kit	**V430-ALBR**
IR Ring Light Installation Kit	**V430-ALIR**

Auto Focus Multi Code Reader MicroHAWK V430-F series

Wiring Options

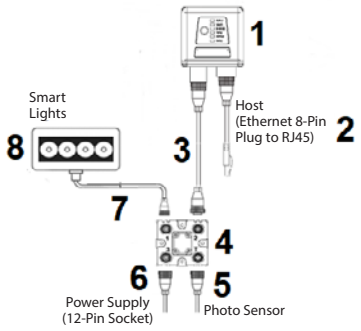

Drawing Reference	Category	Length / Spec	Model
2	Ethernet Communication Cables – Straight Connectors M12 Plug on Camera to RJ45 Connector	1 Meter	**V430-WE-1M**
		3 Meters	**V430-WE-3M**
		5 Meters	**V430-WE-5M**
	Ethernet Communication Cables – Right Angle M12 Connectors* M12 Plug on Camera to RJ45 Connector	3 Meters – Right Angle Up*	**V430-WELU-3M**
		3 Meters – Right Angle Down*	**V430-WELD-3M**
3	Camera to QX-1 Interconnect Cables M12 Socket to M12 Plug QX-1 is used as breakout module for common IO signals and power.	1 Meter	**V430-WQ-1M**
	M12 Socket to M12 Plug, with Power Filter	300 mm	**V430-WQF-1M**
	Camera to QX-1 Interconnect Cables M12 Socket to M12 Plug QX-1 is used as breakout module for common IO signals and power.	3 Meters	**V430-WQ-3M**
		5 Meters	**V430-WQ-5M**
4	QX-1 Interconnect Module – Power, Trigger, Smart Light Control Breakout	-	**98-000103-02**
5	QX-1 Photo Sensor, M12 4-Pin Plug, NPN	2 Meters – Light ON/ Dark ON	**99-9000016-01**
	QX-1 Field-Wireable M12 4-Pin Plug for Any Trigger Source or Photo Sensor	Screw Terminals	**98-9000239-01**
6	Power Supply, 100-240VAC, +24VDC, M12 12-Pin Socket	1 Meter US/Euro Plug	**97-000012-01**
7	QX-1 M12 to Smart Light Power and Strobe Control Cables M12 Plug on QX-1 to 5 Pin Socket on light	3 Meters – Continuous Power	**61-000204-01**
		3 Meters – Strobe Control	**61-000218-01**
8	Omron Microscan Smart Light Series	Integrated Power and Strobe Control Module	See Omron Microscan Smart Light Offering - Ring, DOAL, Large Area Lighting

* Right angle cables.

Right angle up

Right angle down

Alternate Wiring Options

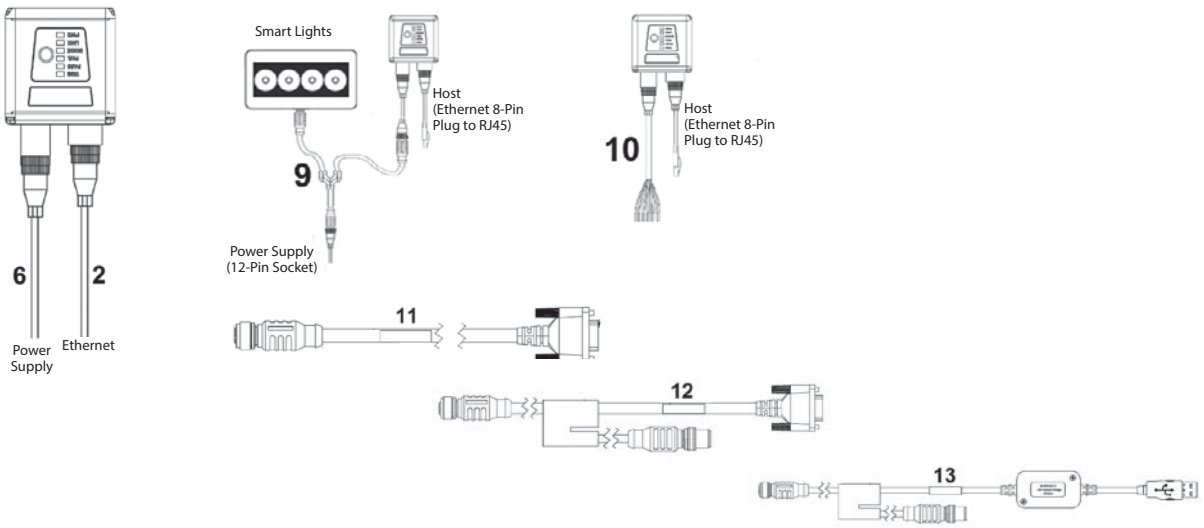

Drawing Reference	Category	Length / Spec	Model
9	Y Cable, Camera/Power and Smart Light Power (Continuous On)	1 Meter	**61-9000135-01**
	Y Cable, Camera/Power and Smart Light Strobe Control	1 Meter	**61-9000137-01**
10	M12 to Flying Leads Cable, Straight Power, IO, RS-232, USB	3 Meters	**V430-W8-3M**
	M12 to Flying Leads Cable, with Power Filter		**V430-W8F-3M**
	M12 to Flying Leads Cable, Straight Power, IO, RS-232, USB	5 Meters	**V430-W8-5M**
	M12 to Flying Leads Cable, with Power Filter		**V430-W8F-5M**
	M12 to Flying Leads Cable Right Angle Power, IO, RS232, USB	3 Meters – Right Angle Up	**V430-W8LU-3M**
	M12 to Flying Leads Cable Right Angle, with Power Filter		**V430-W8LUF-3M**
	M12 to Flying Leads Cable Right Angle Power, IO, RS232, USB	3 Meters – Right Angle Down	**V430-W8LD-3M**
	M12 to Flying Leads Cable Right Angle, with Power Filter		**V430-W8LDF-3M**
11	M12 to RS-232 Breakout	1 Meter	**V430-WR-1M**
		3 Meters	**V430-WR-3M**
12	Camera to QX-1 Interconnect Cables with RS-232 Breakout	2.7 Meters	**V430-WQR-3M**
13	Camera to QX-1 Interconnect Cables with USB Keyboard Wedge Breakout	2.7 Meters	**V430-WQK-3M**

Auto Focus Multi Code Reader MicroHAWK V430-F series

System Configurations

Ethernet (TCP / IP, EtherNet/IP, PROFINET)

Input commands and output results via Ethernet.
Triggers can be input using the V430-W8 Cable.

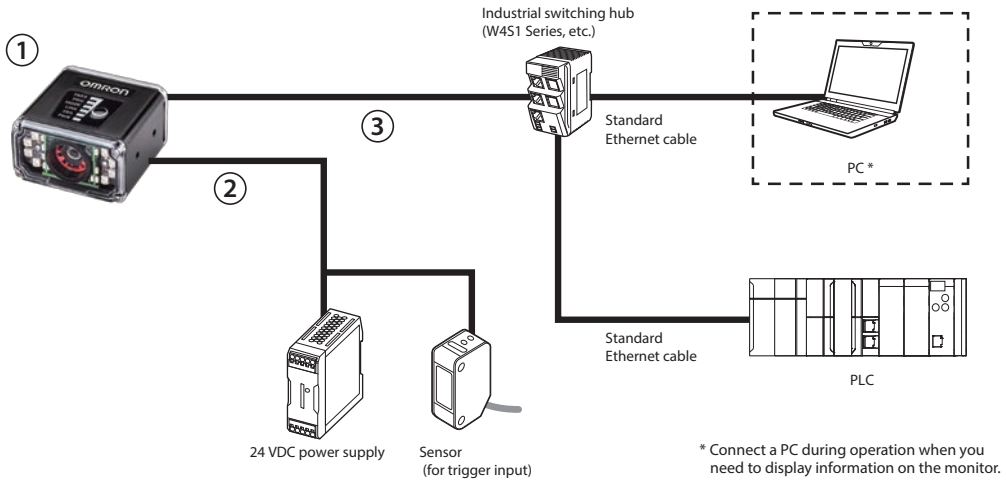

No.	Type	Model
1	Auto Focus Multi Code Reader	V430-F□□□□□□□□-□□□
2	I/O cable (Flying Leads Cable)	V430-W8□□□-□M
3	Ethernet cable	V430-WE□□-□M

I/O interface

Input triggers and output judgment results via I/O.

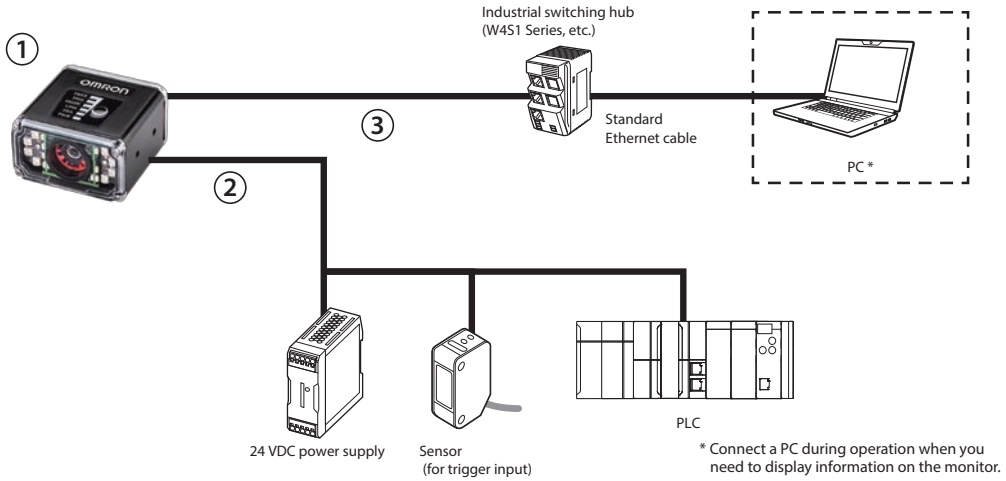

No.	Type	Model
1	Auto Focus Multi Code Reader	V430-F□□□□□□□□-□□□
2	I/O cable (Flying Leads Cable)	V430-W8□□□-□M
3	Ethernet cable	V430-WE□□-□M

Auto Focus Multi Code Reader MicroHAWK V430-F series

System Configurations

RS-232C configuration 1

Input commands and output results via RS-232C.
Triggers can be input using the V430-W8 Cable.

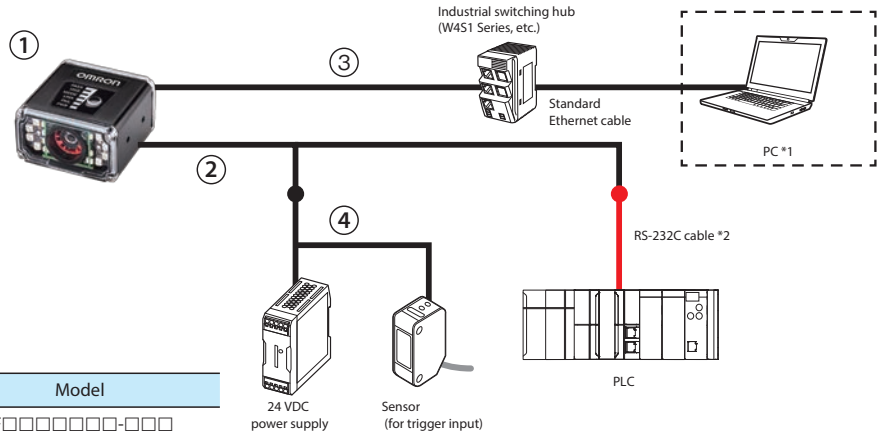

No.	Type	Model
1	Auto Focus Multi Code Reader	V430-F□□□□□□□-□□□
2	Camera to QX-1 Interconnect Cables with RS-232 Breakout	V430-WQR-□M
3	Ethernet cable	V430-WE□□-□M
4	I/O cable (Flying Leads Cable)	V430-W8□□□-□M

*1. Connect a PC during operation when you need to display information on the monitor.
*2. When connecting Omron's CS/CJ/NJ Controller, check the connector shape and signal lines (pin assignment) before preparing the cable.
Connect the V430-WQR Cable directly to Omron's NX Machine Automation Controller or a PC. No RS-232C cable is required.

Wiring of RS-232C cable (Connecting CS/CJ/NJ Controller)

CS1W-SCB/SCU
CJ1W-SCU

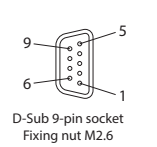

D-Sub 9-pin socket
Fixing nut M2.6

Pin No.	Signal name
1	FG
2	SD
3	RD
4	RS
5	CS
6	5V
7	DR
8	ER
9	SG
Shell	FG

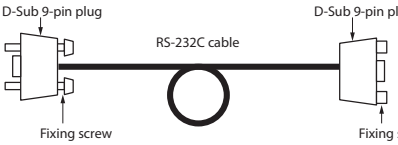

V430-WQR-□

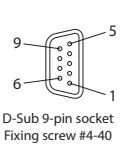

D-Sub 9-pin socket
Fixing screw #4-40

Pin No.	Signal name
1	-
2	SD
3	RD
4	-
5	SG
6	-
7	-
8	-
9	-
Shell	FG

RS-232C configuration 2

Input commands and output results via RS-232C.
Triggers can be input using the V430-W8 Cable.

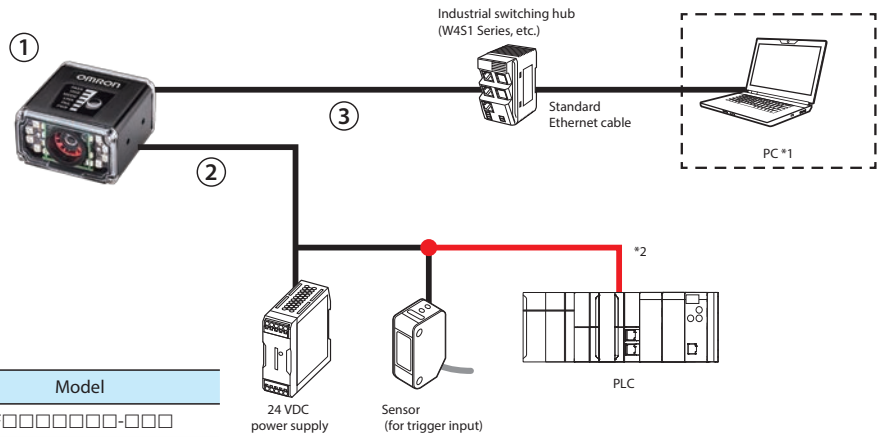

No.	Type	Model
1	Auto Focus Multi Code Reader	V430-F□□□□□□□-□□□
2	I/O cable (Flying Leads Cable)	V430-W8□□□-□M
3	Ethernet cable	V430-WE□□-□M

*1. Connect a PC during operation when you need to display information on the monitor.
*2. Check the connector shape and signal lines (pin assignment) before preparing the V430-W8 Cable.

Auto Focus Multi Code Reader MicroHAWK V430-F series

Ratings and Specifications

V430-F		V430-F□□□□03M-□□□	V430-F□□□□12M-□□□	V430-F□□□□50C-□□□
Symbologies *1	1D Symbologies	Code 39, Code 128, BC412, Interleaved 2 of 5, UPC/EAN, Codabar, Code 93, Pharmacode, PLANET, Postnet, Japanese Post, Australian Post, Royal Mail, Intelligent Mail, KIX		
	2D Symbologies	Data Matrix (ECC 0-200), QR Code, Micro QR Code, Aztec Code, DotCode		
	Stacked Symbologies	PDF417, MicroPDF417, GS1 Databar (Composite and Stacked)		
Reading Performance *2	Number of Reading Digits	No Upper Limit (depending on bar width and reading distance)		
	Aiming Light	Two Blue LEDs		
	Illumination	Inner LEDs: Four White and Four Red (Wavelength: 625 nm)		
		Outer LEDs: 8 Red or White	Outer LEDs: 8 Red or White; 24 Red or White for V430-F□□□□12M-R□□	Outer LEDs: 8 White
	Reading Distance / Field of View	Refer to *Read Ranges* section for detail.		
	Pitch Angle (α) *3	±30°		
	Skew Angle (β) *3	±30°		
	Tilt Angle (γ) *3	±180°		
Image Capture	Focus	Liquid Lens Autofocus or Fixed Focus (Wide = 5.2 mm, Medium = 7.7 mm, Narrow = 16 mm, L = 16 mm)		
	Resolution	752 (H) x 480 (V)	1280 (H) x 960 (V)	2592 (H) x 1944 (V)
	Color / Monochrome	Monochrome CMOS	Monochrome CMOS	Color CMOS
	Shutter	Global Shutter	Global Shutter	Rolling Shutter
	Frames per Second	60 fps	42 fps	5 fps
	Exposure	50 to 100,000 µs		
Image Logging		FTP		
Trigger		External Trigger (Edge or Level), Communication Trigger (Ethernet, RS-232C)		
I/O Specifications	Input Signals	Trigger Input; New Master: Bi-Directional, Optoisolated, 4.5-28 V rated (10 mA @ 28 VDC)		
	Output Signals	3 Signals : Bi-Directional, Optoisolated, 1-28V rated, (ICE < 100 mA at 24VDC, current limited by user)		
Communication	Connectivity	RS-232C, Ethernet TCP/IP, EtherNet/IP, PROFINET		
	Ethernet Specifications	100BASE-TX / 10BASE-T		
Indicator LEDs		PASS (Green), TRIG (Amber), MODE (Amber), LINK (Amber), FAIL (Red), PWR (Green)		
Power Supply Voltage		DC 24V (Ambient voltage range: DC 5 to 30 V) *5		
Current Consumption		0.18 A at 24 VDC (max.)		
Environmental Immunity*4	Ambient Temperature Range	Operating: 0 to 45° C Storage: -50 to 75°C (No Icing or Condensation)		
	Ambient Humidity Range	Operating and Storage: 5% to 95% (Non-Condensing)		
	Ambient Atmosphere	No Corrosive Gases		
	Vibration Resistance (Destructive)	Sine Vibration: 10 Hz to 55 Hz, 0.35 mm displacement, 20 cycles/axis. Random Vibration: 20 Hz to 2000 Hz, 6.295 Grms, 30 min/axis		
	Shock Resistance (Destructive)	50G, 11 ms, sawtooth profile. 3X in each X, Y, Z axis		
	Degree of Protection	IEC 60529 IP65 and IP67		
Weight	Main Body Only	Approx. 68 g		
	Packaging Weight	Approx. 174 g (including packing)		
Dimensions	Main Body Dimensions	44.5 (W) × 44.5 (D) × 25.4 (H) mm		
	Packaging Dimensions	170 (W) × 117 (D) × 86 (H) mm		
Accessories		ReadMeFirst, CE Compliance Sheet		
LED Safety Standard		IEC 62471-1: 2006 Risk-Exempt Group		
Safety Standards		EN 55024:2010, EN 55032:2015 + AC:2016 FCC Part 15, Subpart B (Class B) UL60950-1 BIS, RCM, KC EAC, BSMI		
Materials	Case	Aluminum Diecast, Alumite (Black)		
	Reading Window	Acrylic		
Software		WebLink		

*1. These symbologies are supported based on Omron's read capability validation standard. Omron recommends that validation be performed for each application.
*2. Unless otherwise specified, reading performance is defined with center of field of view, angle R=∞.
*3. Pitch angle Skew angle Tilt angle

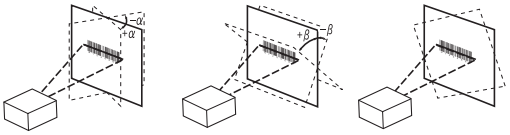

*4. In an electrically noisy environment, use only the V430-F in combination with a noise filter cable (V430-W□F-□M) to ensure proper operation.
*5. UL certification rating is DC 24V. Maximum ripple is 200 mV p-p.

Auto Focus Multi Code Reader MicroHAWK V430-F series

Dimensions

(Unit: mm)

Code Reader

V430-F

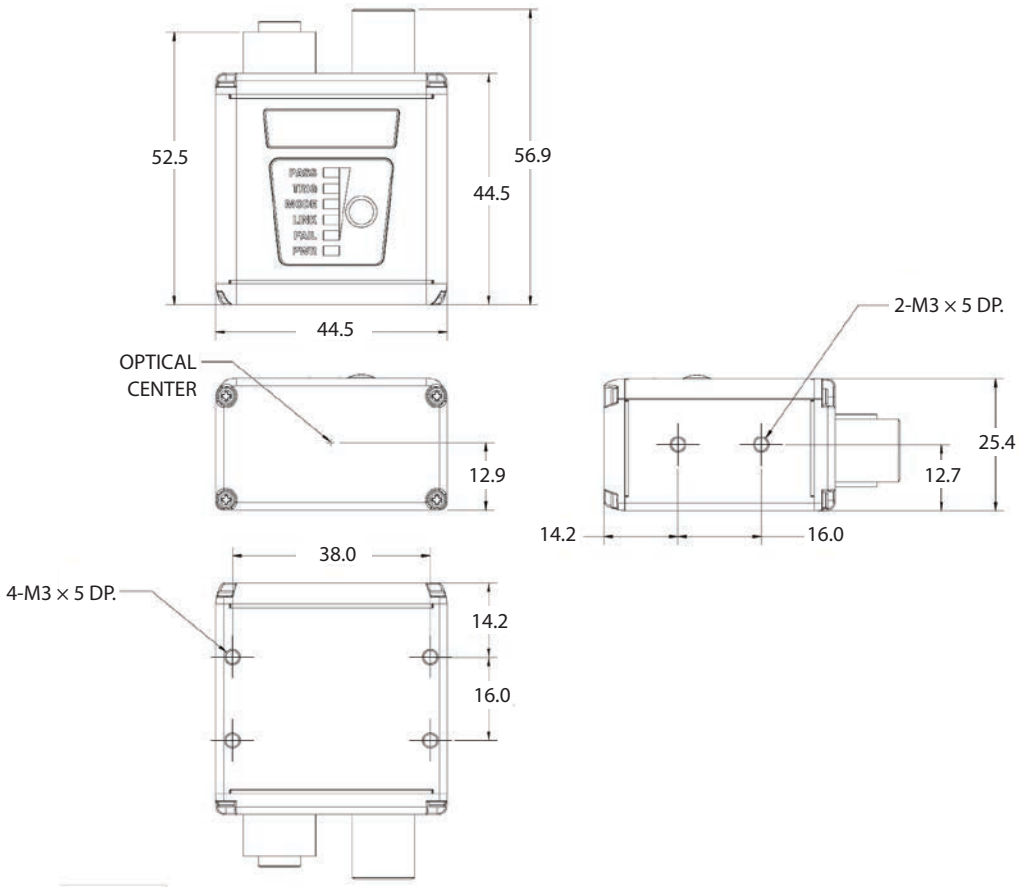

Code Reader

V430-F with Alternate Optics and Illumination

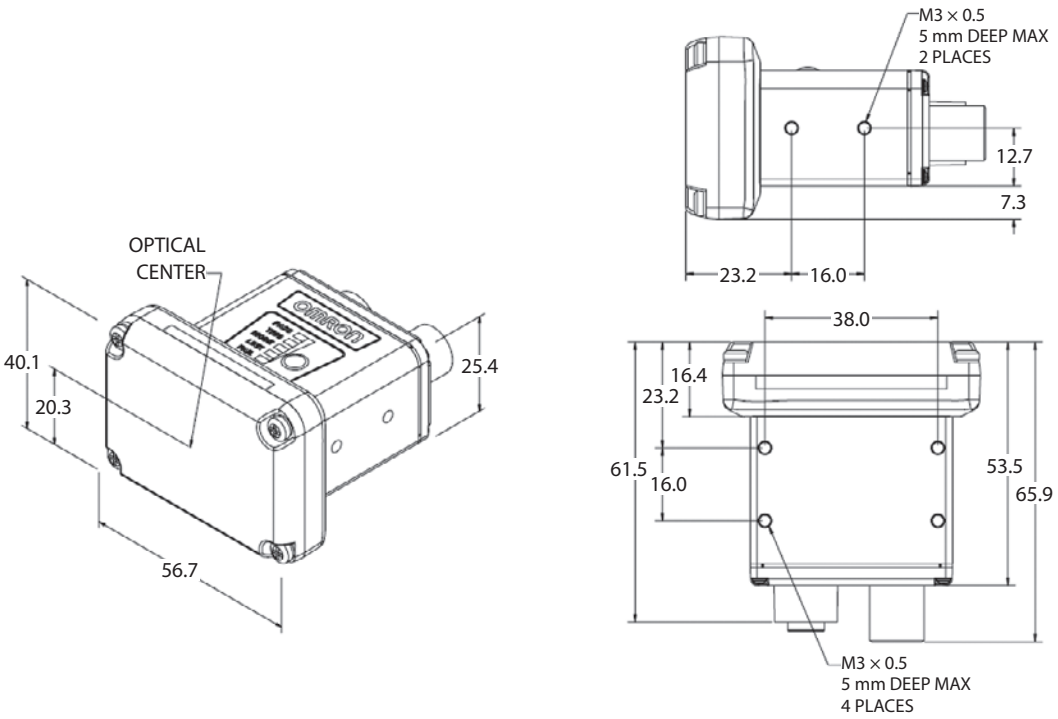

Auto Focus Multi Code Reader V430-F series

Read Ranges

Read range specifications are subject to change.

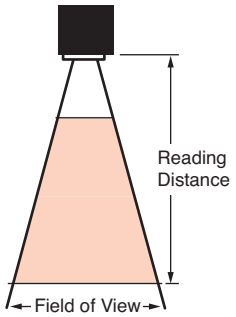

Fixed Focus Field of View (mm) - Wide Lens

	0.3 MP		1.2 MP		5 MP	
Distance (mm)	Width	Height	Width	Height	Width	Height
50	49	32	53	39	50	38
64	62	39	66	49	63	47
81	76	49	81	61	78	58
102	95	60	101	75	96	72
133	121	78	129	97	124	92
190	171	109	182	136	174	130
300	266	170	283	213	271	202
400	353	225	376	282	359	268

Fixed Focus Field of View (mm) - Medium Lens

	0.3 MP		1.2 MP		5 MP	
Distance (mm)	Width	Height	Width	Height	Width	Height
50	34	22	36	27	35	26
64	43	27	45	34	43	32
81	53	34	56	42	54	40
102	66	42	70	52	67	50
133	84	54	90	67	86	64
190	119	76	126	95	121	90
300	185	118	196	147	188	140
400	245	156	260	195	249	186

Fixed Focus Field of View (mm) - Narrow Lens

	0.3 MP		1.2 MP		5 MP	
Distance (mm)	Width	Height	Width	Height	Width	Height
50	15	10	16	12	16	12
64	19	12	21	15	20	15
81	24	15	25	19	24	18
102	30	19	32	24	30	22
133	38	24	40	30	39	29
190	54	34	57	43	54	41
300	83	53	89	67	85	63
400	111	71	118	88	113	84

Auto Focus Multi Code Reader V430-F series

Autofocus Field of View (mm) - Wide Lens

	0.3 MP		1.2 MP		5 MP	
Distance (mm)	Width	Height	Width	Height	Width	Height
50	51	33	55	41	52	39
100	97	62	103	77	98	73
150	142	90	151	113	144	107
200	187	119	199	149	190	142
250	232	148	247	185	236	176
300	277	177	295	221	282	210

Autofocus Field of View (mm) - Medium Lens

	0.3 MP		1.2 MP		5 MP	
Distance (mm)	Width	Height	Width	Height	Width	Height
50	33	21	36	27	34	25
100	63	40	67	50	64	48
150	92	59	98	73	94	70
200	121	77	129	97	123	92
250	151	96	160	120	153	114
300	180	115	191	144	183	136

Autofocus Field of View (mm) - Narrow Lens

	0.3 MP		1.2 MP		5 MP	
Distance (mm)	Width	Height	Width	Height	Width	Height
50	15	10	16	12	16	12
100	29	19	31	23	30	22
150	43	27	45	34	43	32

Long Range Autofocus Field of View (mm)

	0.3 MP		1.2 MP		5 MP	
Distance (mm)	Width	Height	Width	Height	Width	Height
75	22	14	24	18	23	17
100	29	19	31	23	30	22
200	56	36	60	45	57	43
300	83	53	89	67	85	63
400	111	71	118	88	113	84
500	138	88	147	110	140	105
600	165	105	176	132	168	125
700	192	123	204	153	196	146
800	219	140	233	175	223	166
900	247	157	262	197	251	187
1000	274	175	291	218	279	208
1200	328	209	349	262	334	249
1300	355	227	378	283	362	270
1400	382	244	407	305	389	290
1500	410	261	436	327	417	311

Related Manuals

Man.No.	Model	Manual
Z432	V320-F, V330-F, V420-F, V430-F	MicroHAWK V320-F / V330-F / V420-F / V430-F User Manual

Auto Focus Multi Code Reader

MicroHAWK V420-F series

Auto Focus Multi Code Reader

The MicroHAWK V420-F Auto Focus Multi Code Reader has the same reading ability as the MicroHAWK V430-F Series but different communication interfaces.
- RS-232, USB, Ethernet Over USB
- IP54 Enclosure

• See the V430-F Series on page 6 for the common features.
Refer to the V420-F series datasheet (Cat. No. Q275) for details.

Ordering Information

Code Readers

Categories:

1. Fixed Focus Camera
- a.) V420-F Monochrome Fixed Focus Camera
- b.) V420-F Color Fixed Focus Camera
- c.) V420-F 1.2 MP Monochrome Fixed Focus Camera with Narrow Lens

2. Autofocus Camera
- a.) V420-F 0.3 MP Monochrome Autofocus Camera (50 -300 mm)
- b.) V420-F 1.2 MP Monochrome Autofocus Camera (50 – 300 mm for Wide and Medium Lens, 40 – 150 mm for Narrow Lens)
- c.) V420-F Color Autofocus Camera (50 - 300 mm)
- d.) V420-F 1.2 MP Monochrome Long Range Autofocus Camera (75 - 1160 mm)

1a) V420-F Monochrome Fixed Focus Camera: Valid Combinations

V420-F[XXX][Y][ZZZ]-[L][C][P]

Key	Classification	Code	Meaning
XXX	Focus Distance (mm)	050	Fixed Focus at 50 mm
		064	Fixed Focus at 64 mm
		081	Fixed Focus at 81 mm
		102	Fixed Focus at 102 mm
		133	Fixed Focus at 133 mm
		190	Fixed Focus at 190 mm
		300	Fixed Focus at 300 mm
Y	Lens	W	Wide Field of View - 5.2 mm Focal Length Lens
		M	Medium Field of View – 7.7 mm Focal Length Lens
ZZZ	Sensor	03M	752 x 480 (0.3 MP) Pixel, Mono Sensor, Global Shutter
		12M	1280 x 960 (1.2 MP) Pixel, Mono Sensor, Global Shutter
L	Light Type	N	No Outer Light
		S	Standard Outer Light
C	Light Color	N	No Outer Light
		R	Red
		W	White
P	Software License	P	High Speed, Plus Mode
		X	High Speed, X-Mode

1b) V420-F 5.0 MP Color Fixed Focus Camera: Valid Combinations

Note: 5 MP Color cameras are available with No Outer Light or White Light options only.

V420-F[XXX][Y]50C-[L][C][P]

Key	Classification	Code	Meaning
XXX	Focus Distance (mm)	050	Fixed Focus at 50 mm
		064	Fixed Focus at 64 mm
		081	Fixed Focus at 81 mm
		102	Fixed Focus at 102 mm
		133	Fixed Focus at 133 mm
		190	Fixed Focus at 190 mm
		300	Fixed Focus at 300 mm
Y	Lens	W	Wide Field of View - 5.2 mm Focal Length Lens
		M	Medium Field of View – 7.7 mm Focal Length Lens
L	Light Type	N	No Outer Light
		S	Standard Outer Light
C	Light Color	N	No Outer Light
		W	White
P	Software License	P	High Speed, Plus Mode
		X	High Speed, X-Mode

1c) V420-F 1.2 MP Monochrome Fixed Focus Camera with Narrow Lens: Valid Combinations

Note: Fixed Focus Narrow lens option available for 1.2 MP Mono camera only.

V420-F[XXX]N12M-[L][C][P]

Key	Classification	Code	Meaning
XXX	Focus Distance (mm)	064	Fixed Focus at 64 mm
		400	Fixed Focus at 400 mm
L	Light Type	N	No Outer Light
		S	Standard Outer Light
C	Light Color	N	No Outer Light
		R	Red
		W	White
P	Software License	P	High Speed, Plus Mode
		X	High Speed, X-Mode

2a) V420-F 0.3 MP Monochrome Autofocus Camera (50 - 300 mm): Valid Combinations

V420-F000[Y]03M-[L][C][P]

Key	Classification	Code	Meaning
Y	Lens	W	Wide Field of View - 5.2 mm Focal Length Lens
		M	Medium Field of View – 7.7 mm Focal Length Lens
L	Light Type	N	No Outer Light
		S	Standard Outer Light
C	Light Color	N	No Outer Light
		R	Red
		W	White
P	Software License	P	High Speed, Plus Mode
		X	High Speed, X-Mode

Auto Focus Multi Code Reader MicroHAWK V420-F series

2b) V420-F 1.2 MP Monochrome Autofocus Camera (50 - 300 mm for Wide and Medium, 40 – 150 mm for Narrow): Valid Combinations

V420-F000[Y]12M-[L][C][P]

Key	Classification	Code	Meaning
Y	Lens	W	Wide Field of View - 5.2 mm Focal Length Lens
		M	Medium Field of View – 7.7 mm Focal Length Lens
		N	Narrow Field of View – 16 mm Focal Length Lens
L	Light Type	N	No Outer Light
		S	Standard Outer Light
C	Light Color	N	No Outer Light
		R	Red
		W	White
P	Software License	P	High Speed, Plus Mode
		X	High Speed, X-Mode

2c) V420-F 5.0 MP Color Autofocus Camera (50 - 300 mm): Valid Combinations

Note: Narrow Autofocus lens option not available for color camera.

V420-F000[Y]50C-[L][C][P]

Key	Classification	Code	Meaning
Y	Lens	W	Wide Field of View - 5.2 mm Focal Length Lens
		M	Medium Field of View – 7.7 mm Focal Length Lens
L	Light Type	N	No Outer Light
		S	Standard Outer Light
C	Light Color	N	No Outer Light
		W	White
P	Software License	P	High Speed, Plus Mode
		X	High Speed, X-Mode

2d) V420-F 1.2 MP Monochrome Long Range Autofocus Camera (75 - 1160 mm): Valid Combinations

Note: Autofocus Long Range lens option available for 1.2 MP Monochrome camera only.

V430-F000L12M-[L][C][P]

Key	Classification	Code	Meaning
L	Light Type	N	No Outer Light
		S	Standard Outer Light
C	Light Color	N	No Outer Light
		R	Red
		W	White
P	Software License	P	High Speed, Plus Mode
		X	High Speed, X-Mode

Auto Focus Multi Code Reader MicroHAWK V420-F series

Mounting Options

Type	Model
L Bracket Adjustable Angle Mounting Kit	**V430-AM0**
1/4-20 Camera Mounting Block Kit	**V430-AM1**
4" (102 mm) Ram Mount Stand	**V430-AM2**
APG Pan and Tilt Camera Mount	**V430-AM3**
Nylon Screw and Washer Electrical Isolation Mounting Kit	**V430-AM4**
MS-4 / MINI to V/F4XX-F Adapter Plate	**V430-AM5**
Smart Ring Light to V/F4XX-F Mounting Bracket	**V430-AM6**
QX / Vision HAWK to V/F4XX-F Adapter Plate	**V430-AM7**

Optics Options

Type	Model
Front Window Installation Kit	**V430-AF10**
Diffuser Installation Kit	**V430-AF11**
Polarizer Installation Kit	**V430-AF12**
Right Angle Mirror Installation Kit	**V430-AF3**
YAG Filter Installation Kit	**V430-AF4**
ESD-Safe Window Installation Kit	**V430-AF5**
Red Filter Installation Kit	**V430-AF6**
Blue Filter Installation Kit	**V430-AF7**

Lighting Options

Type	Model
Red Light Installation Kit	**V430-ALR**
White Light Installation Kit	**V430-ALW**
Blue Light Installation Kit	**V430-ALB**
IR Light Installation Kit	**V430-ALI**

Auto Focus Multi Code Reader MicroHAWK V420-F series

Wiring Options

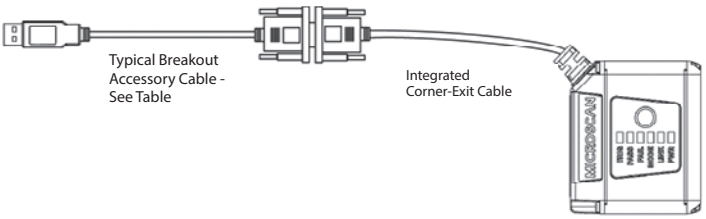

Appearance	Category	Length / Spec	Model
	USB Breakout Cable	1 Meter	**V420-WUB-1M**
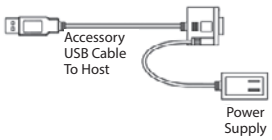	Cable – USB Breakout with External Power Input	1 Meter	**V420-WUX-1M**
	Power Supply	2 Meters	**97-9000006-01**
	Kit – Cable and Power Supply	-	**V420-AC1**
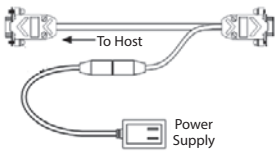	Cable – RS-232 Breakout (DB-15) and External Power Input	1 Meter	**V420-WRX-1M**
	Power Supply	2 Meters	**97-9000006-01**
	Kit – Cable and Power Supply	-	**V420-AC0**
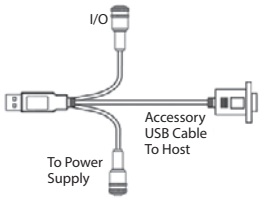	Cable – USB, IO, and Power Breakout	1 Meter	**V420-WU8X-1M**
	Power Supply	2 Meters	**97-000011-02**
	Kit – Cable and Power Supply	-	**V420-AC2**
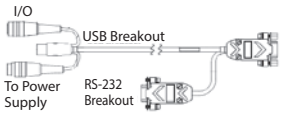	Cable – RS-232, USB, IO, and Power Breakout	1 Meter	**V420-WRU8X-1M**
	Power Supply	2 Meters	**97-000011-02**

Auto Focus Multi Code Reader MicroHAWK V420-F series

Ratings and Specifications

V420-F		V420-F□□□□03M-□□□	V420-F□□□□12M□□□	V420-F□□□□50C-□□□
Symbologies *1	1D Symbologies	Code 39, Code 128, BC412, Interleaved 2 of 5, UPC/EAN, Codabar, Code 93, Pharmacode, PLANET, Postnet, Japanese Post, Australian Post, Royal Mail, Intelligent Mail, KIX		
	2D Symbologies	Data Matrix (ECC 0-200), QR Code, Micro QR Code, Aztec Code, DotCode		
	Stacked Symbologies	PDF417, MicroPDF417, GS1 Databar (Composite and Stacked)		
Reading Performance *2	Number of Reading Digits	No Upper Limit (depending on bar width and reading distance)		
	Aiming Light	Two Blue LEDs		
	Illumination	Inner LEDs: Four White and Four Red (Wavelength: 625 nm)		
		Outer LEDs: 8 Red or White	Outer LEDs: 8 Red or White	Outer LEDs: 8 White
	Reading Distance / Field of View	Refer to *Read Ranges* section for detail.		
	Pitch Angle (α) *3	±30°		
	Skew Angle (β) *3	±30°		
	Tilt Angle (γ) *3	±180°		
Image Capture	Focus	Liquid Lens Autofocus or Fixed Focus (Wide = 5.2 mm, Medium = 7.7 mm, Narrow = 16 mm, L = 16 mm)		
	Resolution	752 (H) x 480 (V)	1280 (H) x 960 (V)	2592 (H) x 1944 (V)
	Color / Monochrome	Monochrome CMOS	Monochrome CMOS	Color CMOS
	Shutter	Global Shutter	Shutter Global Shutter	Rolling Shutter
	Frames per Second	60 fps	42 fps	5 fps
	Exposure	50 to 100,000 µs		
Image Logging		FTP		
Trigger		External Trigger (Edge or Level), Communication Trigger (Ethernet, RS-232C)		
I/O Specifications	Input Signals	Trigger Input: 5-28 V rated (0.16 mA @ 5V DC); New Master: 5 to 28 V rated (0.16 mA @ 5 VDC); Default: 3.3 V rated (0 mA @ 3.3 V)		
	Output Signals	3 Signals : 5 V TTL-compatible, can sink 10 mA and source 10 mA		
Communication	Connectivity	RS-232C, USB 2.0 High Speed, Ethernet over USB/HID		
	Ethernet Specifications	100BASE-TX / 10BASE-T		
Indicator LEDs		PASS (Green), TRIG (Amber), MODE (Amber), LINK (Amber), FAIL (Red), PWR (Green)		
Power Supply Voltage		5 VDC +/- 5%		
Current Consumption		650 mA at 5 VDC (max.)		
Environmental Immunity*4	Ambient Temperature Range	Operating: 0 to 45° C Storage: -50 to 75°C (No Icing or Condensation)		
	Ambient Humidity Range	Operating and storage: 5% to 95% (Non-Condensing)		
	Ambient Atmosphere	No Corrosive Gases		
	Vibration Resistance (Destructive)	Sine Vibration: 10 Hz to 55 Hz, 0.35 mm displacement, 20 cycles/axis. Random Vibration: 20 Hz to 2000 Hz, 6.295 Grms, 30 min/axis		
	Shock Resistance (Destructive)	50G, 11 ms, sawtooth profile. 3X in each X, Y, Z axis		
	Degree of Protection	IEC 60529 IP54		
Weight	Main Body Only	120 g		
	Packaging Weight	Approx. 230 g (including packing)		
Dimensions	Main Body Dimensions	44.5 (W) × 38.1 (D) × 25.4 (H) mm		
	Packaging Dimensions	170 (W) × 117 (D) × 86 (H) mm		
Accessories		ReadMeFirst, CE Compliance Sheet		
LED Safety Standard		IEC 62471-1: 2006 Risk-Exempt Group		
Safety Standards		EN 55024:2010, EN 55032:2015 + AC:2016 FCC Part 15, Subpart B (Class B) UL60950-1 BIS, RCM, KC EAC, BSMI		
Materials	Case	Aluminum Diecast, Alumite (Black)		
	Reading Window	Acrylic		
Software		WebLink		

*1. These symbologies are supported based on Omron's read capability validation standard. Omron recommends that validation be performed for each application.
*2. Unless otherwise specified, reading performance is defined with center of field of view, angle R=∞.
*3. Pitch angle Skew angle Tilt angle

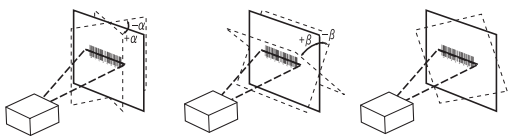

*4. In an electrically noisy environment, use only the V430-F in combination with a noise filter cable (V430-W□F-□M) to ensure proper operation.

Auto Focus Multi Code Reader MicroHAWK V420-F series

Dimensions

(Unit: mm)

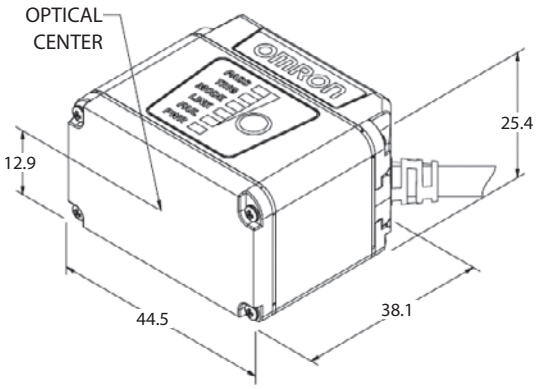

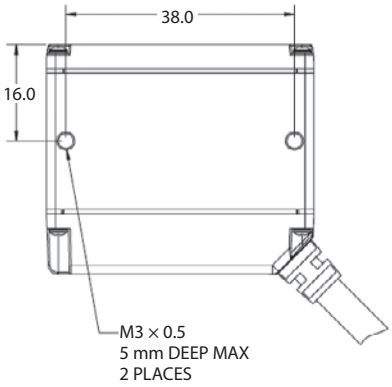

Read Ranges

Read range specifications are subject to change.

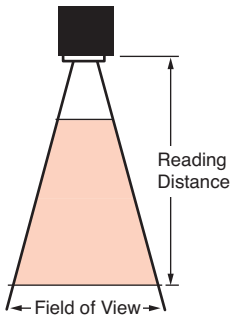

Fixed Focus Field of View (mm) - Wide Lens

	0.3 MP		1.2 MP		5 MP	
Distance (mm)	Width	Height	Width	Height	Width	Height
50	49	32	53	39	50	38
64	62	39	66	49	63	47
81	76	49	81	61	78	58
102	95	60	101	75	96	72
133	121	78	129	97	124	92
190	171	109	182	136	174	130
300	266	170	283	213	271	202
400	353	225	376	282	359	268

Fixed Focus Field of View (mm) - Medium Lens

	0.3 MP		1.2 MP		5 MP	
Distance (mm)	Width	Height	Width	Height	Width	Height
50	34	22	36	27	35	26
64	43	27	45	34	43	32
81	53	34	56	42	54	40
102	66	42	70	52	67	50
133	84	54	90	67	86	64
190	119	76	126	95	121	90
300	185	118	196	147	188	140
400	245	156	260	195	249	186

Auto Focus Multi Code Reader MicroHAWK V420-F series

Read Ranges

Fixed Focus Field of View (mm) - Narrow Lens

	0.3 MP		1.2 MP		5 MP	
Distance (mm)	Width	Height	Width	Height	Width	Height
50	15	10	16	12	16	12
64	19	12	21	15	20	15
81	24	15	25	19	24	18
102	30	19	32	24	30	22
133	38	24	40	30	39	29
190	54	34	57	43	54	41
300	83	53	89	67	85	63
400	111	71	118	88	113	84

Autofocus Field of View (mm) - Wide Lens

	0.3 MP		1.2 MP		5 MP	
Distance (mm)	Width	Height	Width	Height	Width	Height
50	51	33	55	41	52	39
100	97	62	103	77	98	73
150	142	90	151	113	144	107
200	187	119	199	149	190	142
250	232	148	247	185	236	176
300	277	177	295	221	282	210

Autofocus Field of View (mm) - Medium Lens

	0.3 MP		1.2 MP		5 MP	
Distance (mm)	Width	Height	Width	Height	Width	Height
50	33	21	36	27	34	25
100	63	40	67	50	64	48
150	92	59	98	73	94	70
200	121	77	129	97	123	92
250	151	96	160	120	153	114
300	180	115	191	144	183	136

Autofocus Field of View (mm) - Narrow Lens

	0.3 MP		1.2 MP		5 MP	
Distance (mm)	Width	Height	Width	Height	Width	Height
50	15	10	16	12	16	12
100	29	19	31	23	30	22
150	43	27	45	34	43	32

Auto Focus Multi Code Reader MicroHAWK V420-F series

Long Range Autofocus Field of View (mm)

	0.3 MP		1.2 MP		5 MP	
Distance (mm)	Width	Height	Width	Height	Width	Height
75	22	14	24	18	23	17
100	29	19	31	23	30	22
200	56	36	60	45	57	43
300	83	53	89	67	85	63
400	111	71	118	88	113	84
500	138	88	147	110	140	105
600	165	105	176	132	168	125
700	192	123	204	153	196	146
800	219	140	233	175	223	166
900	247	157	262	197	251	187
1000	274	175	291	218	279	208
1200	328	209	349	262	334	249
1300	355	227	378	283	362	270
1400	382	244	407	305	389	290
1500	410	261	436	327	417	311

Related Manuals

Man.No.	Model	Manual
Z432	V320-F, V330-F, V420-F, V430-F	MicroHAWK V320-F / V330-F / V420-F / V430-F User Manual

MEMO

Multicode Reader

MicroHAWK V330-F series

Compact Ethernet barcode reader.

- Simple configuration with WebLink.
- 5 megapixel sensor available.
- IP40.
- Single snap-in RJ45 connector and cable.
- Ethernet TCP/IP.
- Power over Ethernet.

Refer to the V330-F series datasheet (Cat. No. Q276) for details.

Ordering Information

Code Readers

Categories:

1. Fixed Focus Camera

a) V330-F Monochrome and Color Fixed Focus Camera with Standard Lens
b) V330-F Monochrome and Color Fixed Focus Camera with Narrow Lens

1a) V330-F Mono and Color Camera with Standard Lens: Valid Combinations

V330-F[XXX][Y][ZZZ]-NN[P]

Key	Classification	Code	Meaning
XXX	Focus Distance (mm)	050	Fixed Focus at 50 mm
		064	Fixed Focus at 64 mm
		081	Fixed Focus at 81 mm
		102	Fixed Focus at 102 mm
		133	Fixed Focus at 133 mm
		190	Fixed Focus at 190 mm
		300	Fixed Focus at 300 mm
Y	Lens	W	Wide Field of View - 5.2 mm Focal Length Lens
		M	Medium Field of View – 7.7 mm Focal Length Lens
ZZZ	Sensor	03M	752 x 480 (0.3 MP) Pixel, Mono Sensor, Global Shutter
		12M	1280 x 960 (1.2 MP) Pixel, Mono Sensor, Global Shutter
		50C	2592 x 1944 (5 MP) Pixel, Color Sensor, Rolling Shutter
P	Software License	P	High Speed, Plus Mode
		X	High Speed, X-Mode

1b) V330-F Mono and Color Camera with Narrow Lens: Valid Combinations

Note: 50 mm Fixed Focus option not available with Narrow Lens.

V330-F[XXX]N[ZZZ]-NN[P]

Key	Classification	Code	Meaning
XXX	Focus Distance (mm)	064	Fixed Focus at 64 mm
		081	Fixed Focus at 81 mm
		102	Fixed Focus at 102 mm
		133	Fixed Focus at 133 mm
		190	Fixed Focus at 190 mm
		300	Fixed Focus at 300 mm
ZZZ	Sensor	03M	752 x 480 (0.3 MP) Pixel, Mono Sensor, Global Shutter
		12M	1280 x 960 (1.2 MP) Pixel, Mono Sensor, Global Shutter
		50C	2592 x 1944 (5 MP) Pixel, Color Sensor, Rolling Shutter
P	Software License	P	High Speed, Plus Mode
		X	High Speed, X-Mode

Optics Options

Type	Model
Diffuser Kit – Peel and Stick Accessory. Exterior to unit.	**V330-AF1**
Polarizer Kit – Peel and Stick Accessory. Exterior to unit.	**V330-AF2**

Direct Wiring Options

Type	Length	Model
Power Over Ethernet (PoE) Single Port Injector	N/A	**V330-AP1**
Standard Ethernet Cables, In-Cabinet Use; Standard RJ45 Connectors on Both Ends; Green	1 Meter	**XS6W-5PUR8SS100CM-G**
	3 Meters	**XS6W-5PUR8SS300CM-G**
	5 Meters	**XS6W-5PUR8SS500CM-G**
	10 Meters	**XS6W-5PUR8SS1000CM-G**
	15 Meters	**XS6W-5PUR8SS1500CM-G**
Standard Ethernet Cables, Out-of-Cabinet Use; Rugged RJ45 Connectors on Both Ends; Light Blue	1 Meter	**XS5W-T421-CMD-K**
	3 Meters	**XS5W-T421-EMD-K**
	5 Meters	**XS5W-T421-GMD-K**
	10 Meters	**XS5W-T421-JMD-K**
	15 Meters	**XS5W-T421-KMD-K**
High Flex Ethernet Cables for Robot and Cable Tray Use; Rugged RJ45 Connectors on Both Ends; Light Blue	1 Meter	**XS5W-T421-CMD-KR**
	3 Meters	**XS5W-T421-EMD-KR**
	5 Meters	**XS5W-T421-GMD-KR**
	10 Meters	**XS5W-T421-JMD-KR**
	15 Meters	**XS5W-T421-KMD-KR**

Multicode Reader MicroHAWK V330-F series

Ratings and Specifications

V330-F		V330-F□□□□03M-□□□	V330-F□□□□12M□□□	V330-F□□□□50C-□□□
Symbologies *1	1D Symbologies	Code 39, Code 128, BC412, Interleaved 2 of 5, UPC/EAN, Codabar, Code 93, Pharmacode, PLANET, Postnet, Japanese Post, Australian Post, Royal Mail, Intelligent Mail, KIX		
	2D Symbologies	Data Matrix (ECC 0-200), QR Code, Micro QR Code, Aztec Code, DotCode		
	Stacked Symbologies	PDF417, MicroPDF417, GS1 Databar (Composite and Stacked)		
Reading Performance *2	Number of Reading Digits	No Upper Limit (depending on bar width and reading distance)		
	Aiming Light	Two Blue LEDs		
	Illumination	Inner LEDs: Four White and Four Red (Wavelength: 625 nm)		
		Outer LEDs: None	Outer LEDs: None	Outer LEDs: None
	Reading Distance / Field of View	Refer to *Read Ranges* section for detail.		
	Pitch Angle (α) *3	±30°		
	Skew Angle (β) *3	±30°		
	Tilt Angle (γ) *3	±180°		
Image Capture	Focus	Fixed Focus (Wide = 5.2 mm, Medium = 7.7 mm, Narrow = 16 mm)		
	Resolution	752 (H) x 480 (V)	1280 (H) x 960 (V)	2592 (H) x 1944 (V)
	Color / Monochrome	Monochrome CMOS	Monochrome CMOS	Color CMOS
	Shutter	Global Shutter	Global Shutter	Rolling Shutter
	Frames per Second	60 fps	42 fps	5 fps
	Exposure	50 to 100,000 µs		
Image Logging		FTP		
Trigger		Communication Trigger (Ethernet)		
I/O Specifications	Input Signals	Ethernet		
	Output Signals	Ethernet		
Communication	Connectivity	Ethernet TCP/IP		
	Ethernet Specifications	100BASE-TX / 10BASE-T		
Indicator LEDs		PASS (Green), PWR (Green)		
Power Supply Voltage		Source: 44-57 VDC IEEE802.3af POE		
Current Consumption		Max Current: 0.10A		
Environmental Immunity*4	Ambient Temperature Range	Operating: 0 to 40° C Storage: -50 to 75° C (No Icing or Condensation)		
	Ambient Humidity Range	Operating and Storage: 5% to 95% (Non-Condensing)		
	Ambient Atmosphere	No Corrosive Gases		
	Vibration Resistance (Destructive)	Oscillation Frequency: 10 to 150Hz, Half Amplitude: 0.35 mm, Vibration Direction: X/Y/Z, Sweep Time: 8 minute/count, Sweep Count: 10 times		
	Shock Resistance (Destructive)	Impact Force: 150 m/s2, Test Direction: 6 directions, three times each (up/down, front/back, left/right)		
	Degree of Protection	IEC 60529 IP40		
Weight	Main Body Only	72 g		
	Packaging Weight	Approx. 180 g (including packing)		
Dimensions	Main Body Dimensions	40 (W) × 63 (D) × 24 (H) mm		
	Packaging Dimensions	170 (W) × 117 (D) × 86 (H) mm		
Accessories		ReadMeFirst, CE Compliance Sheet		
LED Safety Standard		IEC 62471-1: 2006 Risk-Exempt Group		
Safety Standards		EN 55024:2010, EN 55032:2015 + AC:2016 FCC Part 15, Subpart B (Class B) UL60950-1 BIS RCM, KC, EAC and BSMI Pending		
Materials	Case	Aluminum Diecast, Alumite (Black)		
	Reading Window	Acrylic		
Software		WebLink		

*1. These symbologies are supported based on Omron's read capability validation standard. Omron recommends that validation be performed for each application.
*2. Unless otherwise specified, reading performance is defined with center of field of view, angle R=∞.
*3. Pitch angle Skew angle Tilt angle

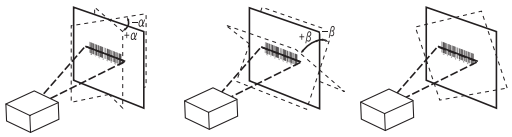

*4. In an electrically noisy environment, use only the V430-F in combination with a noise filter cable (V430-W□F-□M) to ensure proper operation.

Multicode Reader MicroHAWK V330-F series

Dimensions

(Unit: mm)

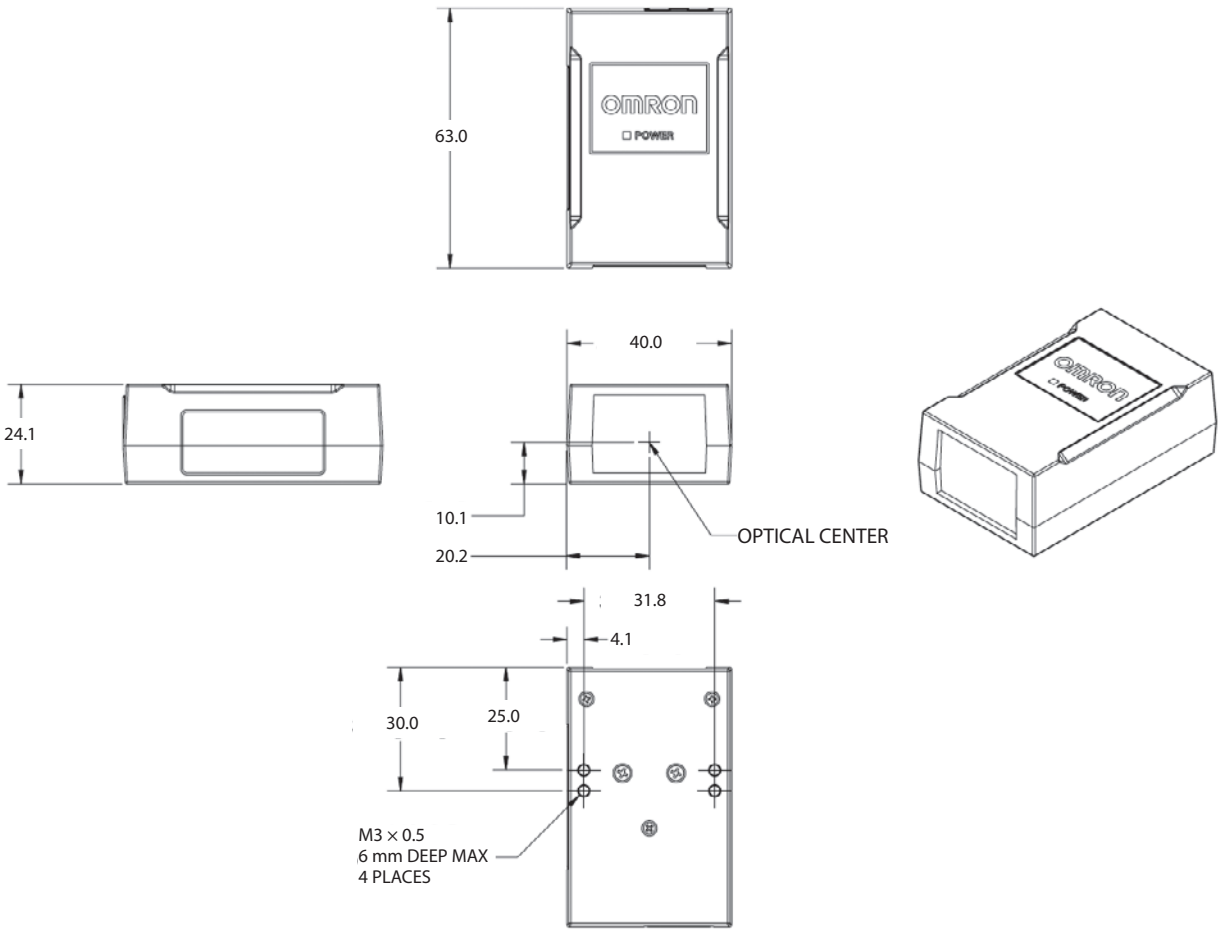

Multicode Reader MicroHAWK V330-F series

Read Ranges

Read range specifications are subject to change.

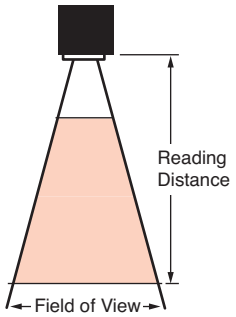

Fixed Focus Field of View (mm) - Wide Lens

	0.3 MP		1.2 MP		5 MP	
Distance (mm)	Width	Height	Width	Height	Width	Height
50	49	32	53	39	50	38
64	62	39	66	49	63	47
81	76	49	81	61	78	58
102	95	60	101	75	96	72
133	121	78	129	97	124	92
190	171	109	182	136	174	130
300	266	170	283	213	271	202
400	353	225	376	282	359	268

Fixed Focus Field of View (mm) - Medium Lens

	0.3 MP		1.2 MP		5 MP	
Distance (mm)	Width	Height	Width	Height	Width	Height
50	34	22	36	27	35	26
64	43	27	45	34	43	32
81	53	34	56	42	54	40
102	66	42	70	52	67	50
133	84	54	90	67	86	64
190	119	76	126	95	121	90
300	185	118	196	147	188	140
400	245	156	260	195	249	186

Fixed Focus Field of View (mm) - Narrow Lens

	0.3 MP		1.2 MP		5 MP	
Distance (mm)	Width	Height	Width	Height	Width	Height
50	15	10	16	12	16	12
64	19	12	21	15	20	15
81	24	15	25	19	24	18
102	30	19	32	24	30	22
133	38	24	40	30	39	29
190	54	34	57	43	54	41
300	83	53	89	67	85	63
400	111	71	118	88	113	84

Related Manuals

Man.No.	Model	Manual
Z432	V320-F, V330-F, V420-F, V430-F	MicroHAWK V320-F / V330-F / V420-F / V430-F User Manual

MEMO

Multicode Reader

MicroHAWK V320-F series

Compact Ethernet barcode reader.

- Simple configuration with WebLink.
- 5 megapixel sensor available.
- IP40.
- Single snap-in RJ50 connector and cable.
- RS-232, Ethernet via USB.

Refer to the V320-F series datasheet (Cat. No. Q277) for details.

Ordering Information

Code Readers

Categories:

1. Fixed Focus Camera

a) V320 Monochrome and Color Fixed Focus Camera with Standard Lens
b) V320 Monochrome and Color Fixed Focus Camera with Narrow Lens

1a) V320 Mono and Color Camera with Standard Lens: Valid Combinations

V320-F[XXX][Y][ZZZ]-NN[P]

Key	Classification	Code	Meaning
XXX	Focus Distance (mm)	050	Fixed Focus at 50 mm
		064	Fixed Focus at 64 mm
		081	Fixed Focus at 81 mm
		102	Fixed Focus at 102 mm
		133	Fixed Focus at 133 mm
		190	Fixed Focus at 190 mm
		300	Fixed Focus at 300 mm
Y	Lens	W	Wide Field of View - 5.2 mm Focal Length Lens
		M	Medium Field of View – 7.7 mm Focal Length Lens
ZZZ	Sensor	03M	752 x 480 (0.3 MP) Pixel, Mono Sensor, Global Shutter
		12M	1280 x 960 (1.2 MP) Pixel, Mono Sensor, Global Shutter
		50C	2592 x 1944 (5 MP) Pixel, Color Sensor, Rolling Shutter
P	Software License	P	High Speed, Plus Mode
		X	High Speed, X-Mode

1b) V320 Mono and Color Camera with Narrow Lens: Valid Combinations

Note: 50 mm Fixed Focus option is not available with Narrow Lens.

V320-F[XXX]N[ZZZ]-NN[P]

Key	Classification	Code	Meaning
XXX	Focus Distance (mm)	064	Fixed Focus at 64 mm
		081	Fixed Focus at 81 mm
		102	Fixed Focus at 102 mm
		133	Fixed Focus at 133 mm
		190	Fixed Focus at 190 mm
		300	Fixed Focus at 300 mm
ZZZ	Sensor	03M	752 x 480 (0.3 MP) Pixel, Mono Sensor, Global Shutter
		12M	1280 x 960 (1.2 MP) Pixel, Mono Sensor, Global Shutter
		50C	2592 x 1944 (5 MP) Pixel, Color Sensor, Rolling Shutter
P	Software License	P	High Speed, Plus Mode
		X	High Speed, X-Mode

Optics Options

Type	Model
Diffuser Kit – Peel and Stick Accessory. Exterior to unit.	**V330-AF1**
Polarizer Kit – Peel and Stick Accessory. Exterior to unit.	**V330-AF2**

Direct Wiring Options

Appearance	Type	Length	Model
	RJ50 to RS-232 and External Power Straight	2 Meters	**V320-WRX-2M**
	RJ50 to RS-232 and External Power Right Angle	2 Meters	**V320-WRXLR-2M**
	Power Supply for V320-WRX-2M and V320-WRXLR-2M	2 Meters	**97-9000006-01**
	RJ50 to Flying Leads Straight	3 Meters	**V320-W8-3M**
	RJ50 to Flying Leads Right Angle to the Right *	3 Meters	**V320-W8LR-3M**

* Right angle cables.

Right angle to the right

Multicode Reader MicroHAWK V320-F series

Wiring Options

Appearance	Category	Length / Spec	Model
	Adapter V/F320-F to all V420-F Cable Accessories RJ50 to DB-15	1 Meter	**V320-WR-1M**
	Adapter V/F320-F to all V420-F Cable Accessories Right Angle to the Right* RJ50 to DB-15	1 Meter	**V320-WRLR-1M**
	USB Breakout Cable	1 Meter	**V420-WUB-1M**
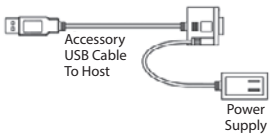	Cable - USB Breakout With External Power Input	1 Meter	**V420-WUX-1M**
	Power Supply	2 Meters	**97-9000006-01**
	Kit – Cable and Power Supply	-	**V420-AC1**
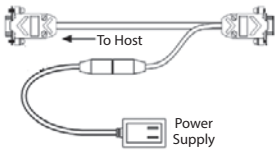	Cable – RS-232 Breakout (DB-15) and External Power Input	1 Meter	**V420-WRX-1M**
	Power Supply	2 Meters	**97-9000006-01**
	Kit – Cable and Power Supply	-	**V420-AC0**
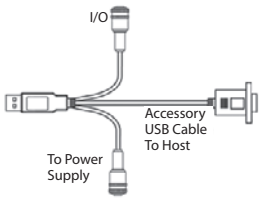	Cable – USB, IO, and Power Breakout	1 Meter	**V420-WU8X-1M**
	Power Supply	2 Meters	**97-000011-02**
	Kit – Cable and Power Supply	-	**V420-AC2**
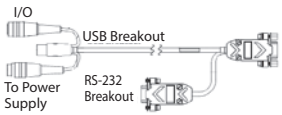	Cable – RS-232, USB, IO, and Power Breakout	1 Meter	**V420-WRU8X-1M**
	Power Supply	2 Meters	**97-000011-02**

* Right angle cables.

Right angle to the right

Multicode Reader MicroHAWK V320-F series

Ratings and Specifications

V320-F		V320-F□□□□03M-□□□	V320-F□□□□12M□□□	V320-F□□□□50C-□□□
Symbologies *1	1D Symbologies	Code 39, Code 128, BC412, Interleaved 2 of 5, UPC/EAN, Codabar, Code 93, Pharmacode, PLANET, Postnet, Japanese Post, Australian Post, Royal Mail, Intelligent Mail, KIX		
	2D Symbologies	Data Matrix (ECC 0-200), QR Code, Micro QR Code, Aztec Code, DotCode		
	Stacked Symbologies	PDF417, MicroPDF417, GS1 Databar (Composite and Stacked)		
Reading Performance *2	Number of Reading Digits	No Upper Limit (depending on bar width and reading distance)		
	Aiming Light	Two Blue LEDs		
	Illumination	Inner LEDs: Four White and Four Red (Wavelength: 625 nm)		
		Outer LEDs: None	Outer LEDs: None	Outer LEDs: None
	Reading Distance / Field of View	Refer to *Read Ranges* section for detail.		
	Pitch Angle (α) *3	±30°		
	Skew Angle (β) *3	±30°		
	Tilt Angle (γ) *3	±180°		
Image Capture	Focus	Fixed Focus (Wide = 5.2 mm, Medium = 7.7 mm, Narrow = 16 mm)		
	Resolution	752 (H) x 480 (V)	1280 (H) x 960 (V)	2592 (H) x 1944 (V)
	Color / Monochrome	Monochrome	CMOS Monochrome	CMOS Color CMOS
	Shutter	Global Shutter	Global Shutter	Rolling Shutter
	Frames per Second	60 fps	42 fps	5 fps
	Exposure	50 to 100,000 µs		
Image Logging		FTP		
Trigger		External Trigger (Edge or Level), Communication Trigger (Ethernet, RS-232C)		
I/O Specifications	Input Signals	Trigger Input: 5-28 V rated (0.16 mA @ 5 VDC); Default: 3.3 V rated (0 mA @ 3.3 V)		
	Output Signals	One Signal (Strobe): 5 V TTL-compatible, can sink 10 mA and source 10 mA		
Communication	Connectivity	USB 2.0 Full-Speed (Ethernet over USB and HID), RS-232		
	Ethernet Specifications	100BASE-TX / 10BASE-T		
Indicator LEDs		PASS (Green), PWR (Green)		
Power Supply Voltage		5 VDC +/- 5%		
Current Consumption		450 mA at 5 VDC (max.)		
Environmental Immunity*4	Ambient Temperature Range	Operating: 0 to 40° C Storage: -50 to 75° C (No Icing or Condensation)		
	Ambient Humidity Range	Operating and Storage: 5% to 95% (Non-Condensing)		
	Ambient Atmosphere	No Corrosive Gases		
	Vibration Resistance (Destructive)	Oscillation Frequency: 10 to 150 Hz, Half Amplitude: 0.35 mm, Vibration Direction: X/Y/Z, Sweep Time: 8 minute/count, Sweep Count: 10 times		
	Shock Resistance (Destructive)	Impact Force: 150 m/s2, Test Direction: 6 directions, three times each (up/down, front/back, left/right)		
	Degree of Protection	IEC 60529 IP40		
Weight	Main Body Only	59 g		
	Packaging Weight	Approx. 166 g (including packing)		
Dimensions	Main Body Dimensions	52 (W) × 39 (D) × 24 (H) mm		
	Packaging Dimensions	170 (W) × 117 (D) × 86 (H) mm		
Accessories		ReadMeFirst, CE Compliance Sheet		
LED Safety Standard		IEC 62471-1: 2006 Risk-Exempt Group		
Safety Standards		EN 55024:2010, EN 55032:2015 + AC:2016 FCC Part 15, Subpart B (Class B) UL60950-1 BIS RCM, KC, EAC and BSMI Pending		
Materials	Case	Aluminum Diecast, Alumite (Black)		
	Reading Window	Acrylic		
Software		WebLink		

*1. These symbologies are supported based on Omron's read capability validation standard. Omron recommends that validation be performed for each application.
*2. Unless otherwise specified, reading performance is defined with center of field of view, angle R=∞.
*3. Pitch angle Skew angle Tilt angle

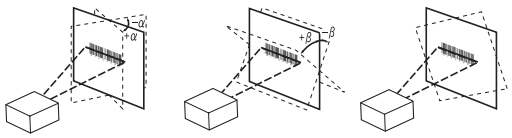

*4. In an electrically noisy environment, use only the V430-F in combination with a noise filter cable (V430-W□F-□M) to ensure proper operation.

Multicode Reader MicroHAWK V320-F series

Dimensions

(Unit: mm)

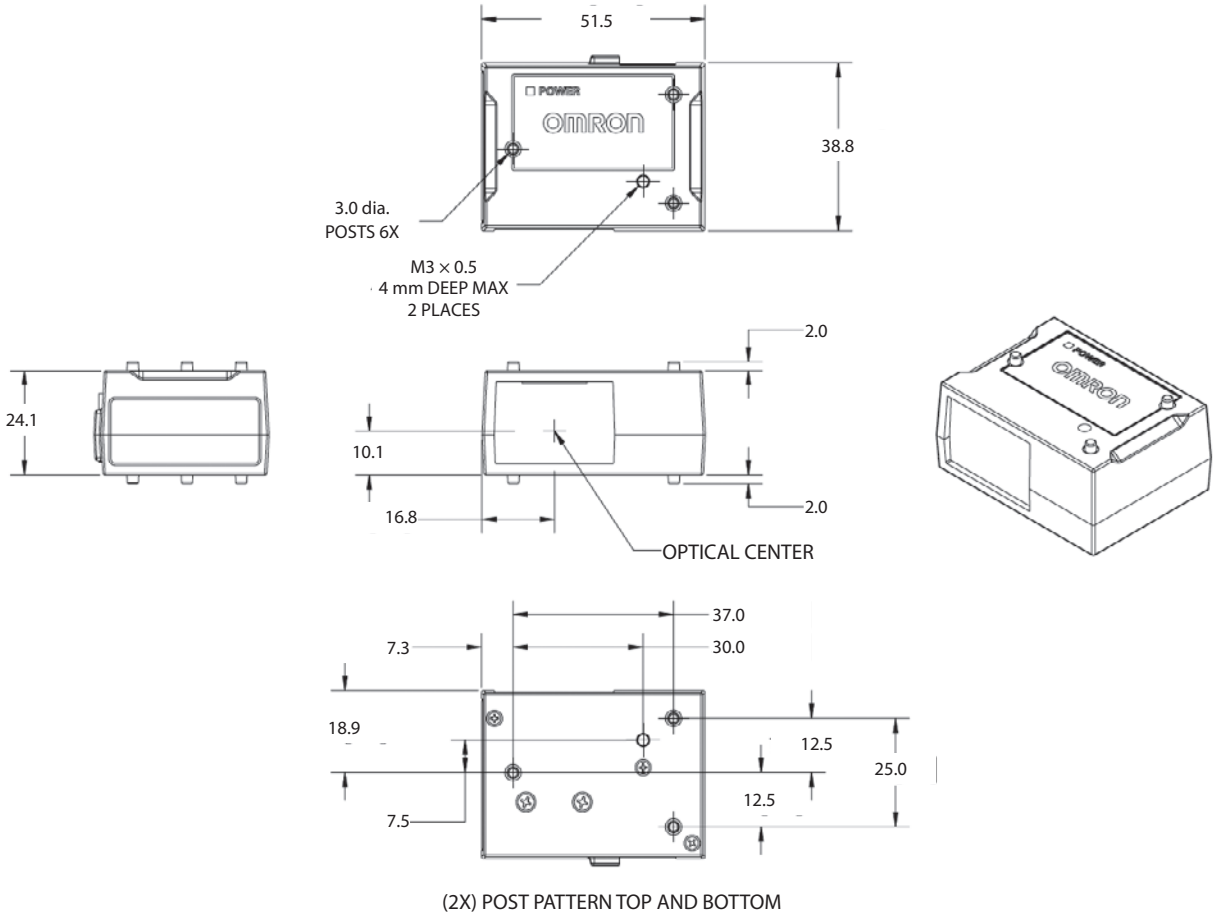

(2X) POST PATTERN TOP AND BOTTOM

Multicode Reader MicroHAWK V320-F series

Read Ranges

Read range specifications are subject to change.

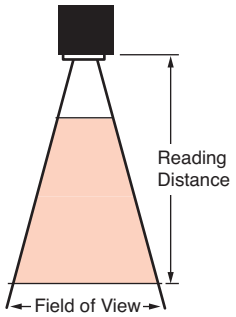

Fixed Focus Field of View (mm) - Wide Lens

	0.3 MP		1.2 MP		5 MP	
Distance (mm)	Width	Height	Width	Height	Width	Height
50	49	32	53	39	50	38
64	62	39	66	49	63	47
81	76	49	81	61	78	58
102	95	60	101	75	96	72
133	121	78	129	97	124	92
190	171	109	182	136	174	130
300	266	170	283	213	271	202
400	353	225	376	282	359	268

Fixed Focus Field of View (mm) - Medium Lens

	0.3 MP		1.2 MP		5 MP	
Distance (mm)	Width	Height	Width	Height	Width	Height
50	34	22	36	27	35	26
64	43	27	45	34	43	32
81	53	34	56	42	54	40
102	66	42	70	52	67	50
133	84	54	90	67	86	64
190	119	76	126	95	121	90
300	185	118	196	147	188	140
400	245	156	260	195	249	186

Fixed Focus Field of View (mm) - Narrow Lens

	0.3 MP		1.2 MP		5 MP	
Distance (mm)	Width	Height	Width	Height	Width	Height
50	15	10	16	12	16	12
64	19	12	21	15	20	15
81	24	15	25	19	24	18
102	30	19	32	24	30	22
133	38	24	40	30	39	29
190	54	34	57	43	54	41
300	83	53	89	67	85	63
400	111	71	118	88	113	84

Related Manuals

Man.No.	Model	Manual
Z432	V320-F, V330-F, V420-F, V430-F	MicroHAWK V320-F / V330-F / V420-F / V430-F User Manual

Handheld DPM Code Reader

HS-360X series

"Ultra-Rugged" Hand Held Code Reader

The HS-360X Ultra-Rugged Handheld Code Reader is Omron Microscan's newest generation of industrial Direct Part Mark (DPM) handheld code reader, purpose built from the ground up to set new standards for durability and performance. With best in class out of box performance most applications require NO setup. An all NEW user interface WebLink$_{PC}$ makes setup for more difficult applications intuitive and easy.

HS-360X:At a Glance

- Wired or Wireless
- Ultra-Rugged DPM Handheld Code Reader
- Industry-Leading DPM Decoding Performance with X-Mode
- Intuitive WebLink$_{PC}$ Interface

HS-360X:Available Codes

Liner

Stacked — PDF417, GS1 Databar

2D — Data Matrix, QR, Micro QR

Please see the Ratings and Specifications for a complete list of supported symbologies.

Ultra-Rugged
The HS-360X withstands multiple drops from 8' and 5,000 tumbles.

X-Mode Decode Algorithms
The HS-360X includes industry-leading X-Mode decoding algorithms to consistently read damaged, distorted or otherwise challenging directly marked codes at high decode rates.

Performance Indicators
In addition to a beeper, visual and vibrating indicators provide silent confirmation of successful reads for noisy or sensitive environments.

Industrial Fluid and Chemical Tolerable
Many industrial fluids and chemicals deemed tolerable.

Charging Station
The charging station is IP65 and transmits and receives data over a Bluetooth class 1 or 2 out to 300 feet. It includes a Wi-Fi friendly mode and a paging button to locate a misplaced code reader.

Ease of Use - WebLink$_{PC}$
Code reader configuration and deployment with browser based user interface and device discovery.

Handheld DPM Code Reader HS-360X series

Ordering Information

Type	Applicable countries	Model
Handheld DPM Code Reader, Wired, HDS-3608	Common (except for India / Korea)	**HDS-3608-0001**
Handheld DPM Code Reader, Wireless, HDS-3678		**HDS-3678-0001**
Battery Spare for HS-360X Wireless Type		**98-9000224-01**
Handheld DPM Code Reader, Wired, HDS-3608 INDIA / KOREA	India / Korea	**HDS-3608-0002**
Handheld DPM Code Reader, Wireless, HDS-3678 INDIA / KOREA		**HDS-3678-0002**
Battery Spare for HS-360X Wireless Type, INDIA / KOREA		**98-9000224-02**
Cradle / Charger, HS-360X Wireless Type	Common	**12-9000937-01**
Cable, USB, Shielded, 2m (Power Supply Required)		**12-9000942-01**
Cable, USB, Shielded, 4.6m (Power Supply Required)		**12-9000943-01**
Cable, USB, Shielded, 2m		**12-9000946-01**
Cable, USB, Shielded, 4.6m		**12-9000947-01**
Cable, RS-232, DB9 Socket, 2M, Straight, HS-360X (Power Supply Required)		**12-9000953-01**
AC power Cord, 1.8m, JAPAN, C13 connector	Japan	**12-9001046-01**
AC power Cord, 1.9m, INDIA, C13 connector	India	**12-9000963-01***
AC power Cord, 2.5m, US, C13 connector	United States	**12-9000959-01**
AC power Cord, 2.5m, EU / Korea, C13 connector	Europe / Korea	**12-9000960-01**
AC power Cord, 2.5m, UK, C13 connector	UK	**12-9000961-01**
AC power Cord, 2.5m, CHINA, C13 connector	China	**12-9000962-01**
KIT, Power Supply for Cradle / Charger, HS-360X Wireless Type (A / C Power Cord Required)	Common	**98-9000181-01**
KIT, Power Supply for Battery Charger, 4 Slot, HS-360X Wireless Type (A / C Power Cord Required)		**98-9000182-01**
4 Slot, Battery Charger, HS-360X Wireless Type (Power Supply Required)		**98-9000185-01**
Intelligent Stand		**98-9000186-01**

Note: Do not use the power supplies or power supply cords indicated in this catalog with any other electric or electronic equipment.
When using the HS-360X Series, please use the power supply and power supply cord indicated in this catalog.

Handheld DPM Code Reader HS-360X series

Ratings and Specifications

Applicable codes	1D	UPC / EAN, UPC / EAN with supplementals, Bookland, EAN, ISSN, UCC Coupon Extended Code, Code 128, GS1-128, ISBT 128, ISBT Concatenation, Code 39, Code 39 Full ASCII, Trioptic Code 39, Code 32, Code 93, Code 11, Interleaved 2 of 5, Discrete 2 of 5, Codabar, MSI, Chinese 2 of 5, Matrix 2 of 5, Korean 3 of 5, GS1 DataBar variants
	2D	PDF417, MicroPDF417, Composite Codes, TLC-39, Data Matrix, QR Code, MicroQR, Aztec, Han Xin, GS1-QR, GS1-DM
	Postal	US Postnet, US Planet, UK Postal, Japan Post, Australia Post, Royal Mail 4 State Customer, UPU 4 State Postal FICS (Post US4), USPS 4 State Postal (Post US3)
Reading performance	Field of view (Horizontal x Vertical) nominal	31° (H) × 23° (V)
	Roll	0 to 360°
	Pitch	±60°
	Skew	±60°
	Scans per charge	Up to 100,000
	Minimum resolution	Code 39: 0.0762 mm PDF417: 0.1016 mm DataMatrix: 0.1016 mm
Interface		USB, RS-232 The code reader supports the following protocols over USB: HID Keyboard (default mode), SNAPI, COM Port Emulation, USB CDC
Power		5 VDC + / - 10% @ 360 mA (RMS typical)
Light source		Aiming pattern: Class 2 Laser 655nm Illumination: Exempt Risk Group, Warm white LED, Red 634nm LED
Environmental specifications	Ambient temperature range	Wireless code reader Operating: -20 to +50°C, Storage: -40 to +70°C Wired code reader Operating: -30 to +50°C, Storage: -40 to +70°C
	Ambient humidity range	5%RH to 95%RH (with no icing or condensation),
	Drop specifications	Withstands multiple 8 ft. / 2.4 m drops to concrete at room temperature.
	Degree of protection	IP65 and IP67
	ESD	20 kV air discharge: 10 kV contact discharge
	Ambient light immunity	0 to 10,037 foot-candles / 0 to 108,000 Lux (direct sunlight)
Weight		Wireless code reader: Approx. 402 g (with Battery) Wired code reader: Approx. 304 g (without Cable)
Dimensions		Wireless code reader: 185 mm (H) × 143 mm (D) × 77 mm (W) Wired code reader: 185 mm (H) × 132 mm (D) × 77 mm (W)

Cradle

Power requirements for host-powered	5.0V ± 10%
Power requirements for external power supply	12.0V ± 5%
Typical current draw when not charging	80mA @ 5V; 30mA @ 12V
Typical current draw in safe charging mode	1200mA @ 5V (BC 1.2), 475mA (non-BC1.2); 700mA @ 12V
Typical current draw in safe charging mode	400mA @ 5V; 200mA @ 12V
Interfaces	USB, RS-232
Radio	Bluetooth, Up to 100 meters / 300 ft. in open air range / environment Serial Port & HID Profiles 2.402 to 2.480 GHz Adaptive Frequency Hopping (co-existence with 802.11 wireless networks) 3Mbit / s (2.1Mbit / s) for Classic Bluetooth 1Mbit / s (0.27Mbit / s) for Low Energy
Ambient temperature range	Operating : -20 to 50°C,Storage : -40 to 70°C
Charging temperature	0 to 40°C nominal, 5 to 35°C ideal
Ambient humidity range	5%RH to 95%RH (non-condensing)
ESD	25 kV air discharge 10 kV contact discharge
Weight	Approx. 390 g
Dimensions	82.6 mm (H) x 229.4 mm (D) x 99.8 mm (W)
Safety standards	UL / EN / IEC 60950-1 + AM2
EMC	IEC61000-4-(2,3,4,5,6,11)
EMI	FCC Part 15 Class B, ICES-003 Class B Japan VCCI Class B

Handheld DPM Code Reader HS-360X series

Read Ranges

(Unit: mm)

Barcode Type	Symbol Density	HS-360X Typical Working Ranges	
		Near	Far
Code 39	0.0762 mm	5 mm	71 mm
PDF417	0.127 mm	5 mm	71 mm
	0.16764 mm	5 mm*	81 mm
DataMatrix	0.127 mm	10 mm	63 mm
	0.254 mm	0 mm	86 mm
QR Code	0.127 mm	10 mm	63 mm
	0.254 mm	0 mm	86 mm
UPC	0.3302 mm	25 mm*	147 mm

* Field of view/barcode width limited. Decode ranges measured with Decoder Effort Level 1 (DPM Mode off), photographic paper barcodes, and under 30 fcd ambient light conditions.

Dimensions

(Unit: mm)

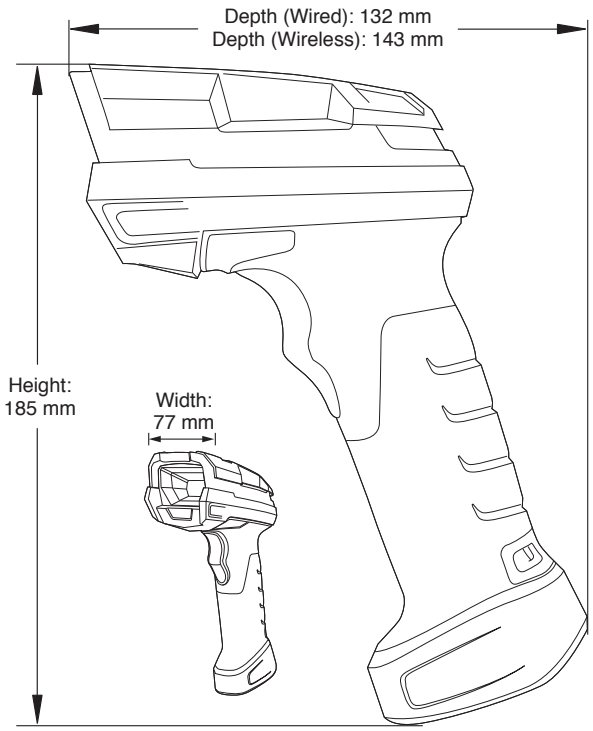

Laser Label Indications

This warning label is attached to the code reader.
Never remove this label or place objects in front of it.

Related Manuals

Man.No.	Model	Manual
84-9000360-02	HS-360X	Handheld DPM Scanner User's Manual
83-9310013-02	HS-360X	Wired Handheld DPM Scanner Quick Start Guide
83-9310014-02	HS-360X	Wireless Handheld DPM Scanner Quick Start Guide
83-9310018-02	HS-360X	Cradle Quick Start Guide
83-9310017-02	HS-360X	Four-Slot Spare Battery Charger Quick Start Guide

Handheld DPM Code Reader HS-360X series

System Configurations

When settig with WebLinkPC, please use PC with WebLinkPC installed and USB cable (12-9000946-01/12-900953-01).

Wired code reader (USB connection)

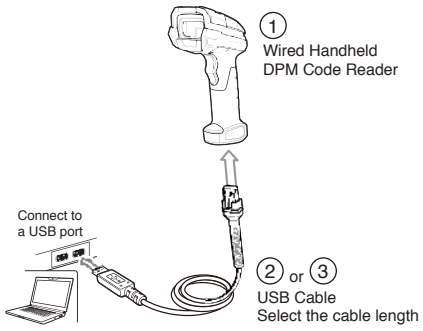

No.	Type	Model
1	Handheld DPM Code Reader, Wired, HDS-3608	HDS-3608-0001
2	Cable, USB, Shielded, 2 m	12-9000946-01
3	Cable, USB, Shielded, 4.6 m	12-9000947-01

Wireless code reader (USB connection)

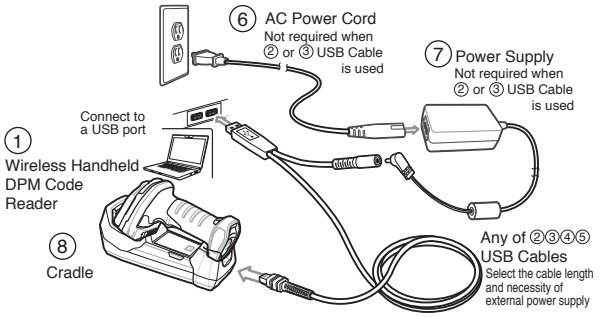

No.	Type	Model
1	Handheld DPM Code Reader, Wireless, HDS-3678	HDS-3678-0001
2	Cable, USB, Shielded, 2 m *1	12-9000946-01
3	Cable, USB, Shielded, 4.6 m *1	12-9000947-01
4	Cable, USB, Shielded, 2 m (power supply required) *1	12-9000942-01
5	Cable, USB, Shielded, 4.6 m (power supply required) *1	12-9000943-01
6	AC Power Cord, 1.8 m, JAPAN, C13 connector *2	12-9001046-01
7	KIT, Power Supply for Cradle/Charger, HS-360X Wireless Type (AC power cord required)	98-9000181-01
8	Cradle/Charger, HS-360X Wireless Type	12-9000937-01

*1. Cables that require external power supply provide faster charge.
From discharge to full charge: 10 hours max. using USB port only, 3 hours max. using external power supply
*2. AC power cords that can be used in other countries are also available.

Wired code reader (RS-232 connection)

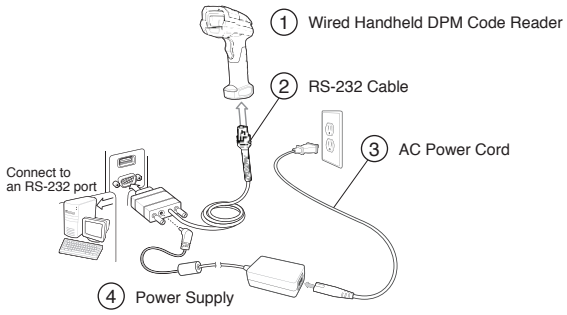

No.	Type	Model
1	Handheld DPM Code Reader, Wired, HDS-3608	HDS-3608-0001
2	Cable, RS-232, DB9 Socket, 2 m, Straight, HS-360X (power supply required)	12-9000953-01
3	AC Power Cord, 1.8 m, JAPAN, C13 connector *	12-9001046-01
4	KIT, Power Supply for Cradle/Charger, HS-360X Wireless Type (AC power cord required)	98-9000181-01

* AC power cords that can be used in other countries are also available.

Wireless code reader (RS-232 connection)

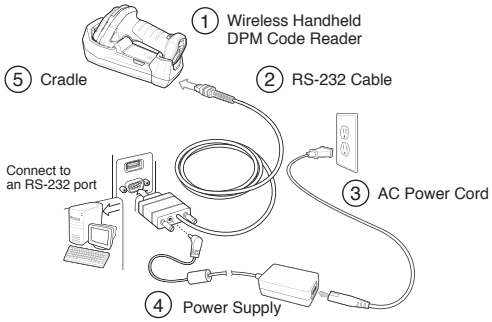

No.	Type	Model
1	Handheld DPM Code Reader, Wireless, HDS-3678	HDS-3678-0001
2	Cable, RS-232, DB9 Socket, 2 m, Straight, HS-360X (power supply required)	12-9000953-01
3	AC Power Cord, 1.8 m, JAPAN, C13 connector *	12-9001046-01
4	KIT, Power Supply for Cradle/Charger, HS-360X Wireless Type (AC power cord required)	98-9000181-01
5	Cradle/Charger, HS-360X Wireless Type	12-9000937-01

* AC power cords that can be used in other countries are also available.

Handheld DPM Code Reader HS-360X series

System Configurations

Wireless code reader (Bluetooth connection)

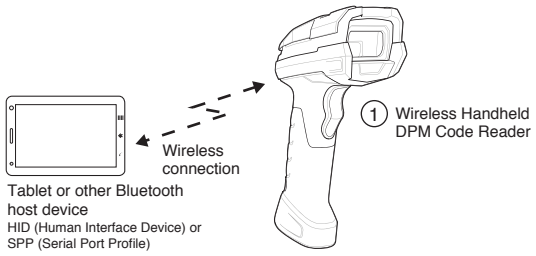

No.	Type	Model
1	Handheld DPM Code Reader, Wireless, HDS-3678	HDS-3678-0001

Charging spare batteries

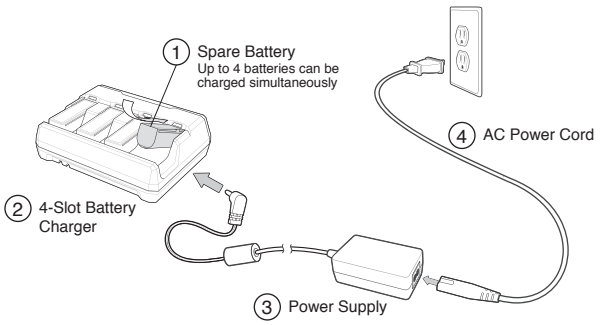

No.	Type	Model
1	Battery, Spare, HS-360X Wireless Type	98-9000224-01
2	4 Slots, Battery Charger, HS-360X Wireless Type (power supply required)	98-9000185-01
3	KIT, Power Supply for Battery Charger, 4 Slots, HS-360X Wireless Type (AC power cord required)	98-9000182-01
4	AC Power Cord, 1.8 m, JAPAN, C13 connector *	12-9001046-01

* AC power cords that can be used in other countries are also available.

Handheld Code Reader

V410-H series

Handheld High-performance Code Reader

Versatile, powerful decode performance for any application.
The alcohol-disinfectable body makes the code readers safe for use in production sites where infection measures are required.

Product lineup includes: SR type, which has a wide reading range for easy alignment of the code reader with a code, XD type capable of consistently reading small codes thanks to high resolution and X-Mode decoding algorithms, and HC type, which is resistant to strong disinfectants used in the medical field.

Alcohol-disinfectable*1

*1. Use isopropyl alcohol 70% for XD/SR type.
In addition isopropyl alcohol, sodium hypochlorite and hydrogen peroxide solution can be used with HC type.

Work efficiency improvement

A wide reading view allows alignment easy

SR type

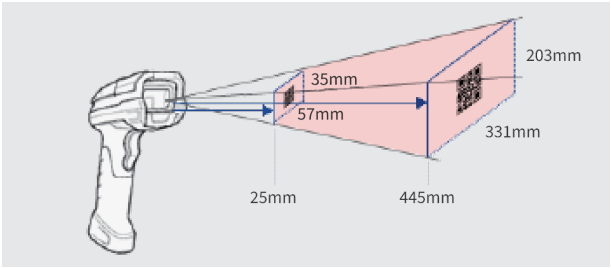

SR type provides easy alignment of a code reader with a code by its wide reading range and reading distance. Efficient manual code reading is possible.

The X-Mode equipped

Consistent reading at high resolution for small codes

XD type

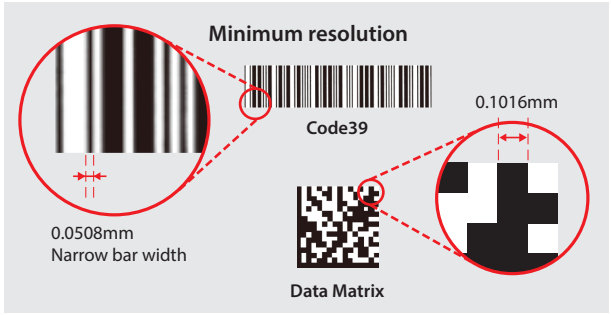

XD type equips with OMRON's unique X-Mode algorithms realizing high DPM (Direct Part Marks) readings. It consistently reads small codes and distorted codes at a high decode rate.

Effective against infectious diseases

HC type

HC type can be used with the major disinfecting chemicals used in medical institutions.
Unlike antibacterial types, which suppress the growth of bacteria, it can be disinfected by chemicals, thus minimizing the risk of infection. It is a safe design that fills the gaps and screw holes where bacteria and viruses are likely to evade disinfection.

Chemical resistance to:	Wipe disinfection
Sodium hypochlorite	OK (can be wiped down)
Isopropyl alcohol	OK (can be wiped down)
Hydrogen peroxide solution	OK (can be wiped down)

Handheld Code Reader V410-H series

Ease of Use - WebLinkPC

SR type / XD type

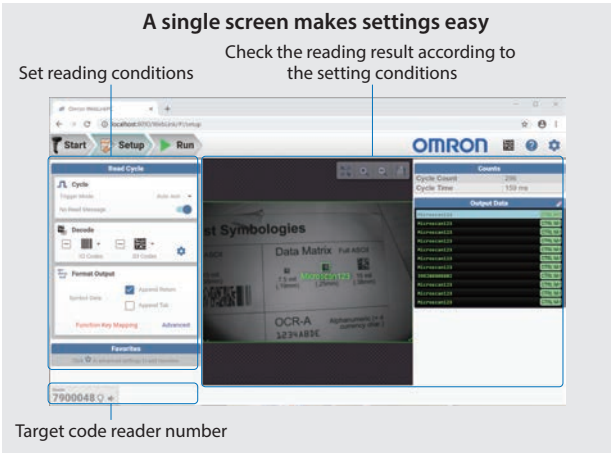

Easy setup with PC setup tool WebLinkPC. Setting most commonly used reading conditions and checking reading result are possible on a single screen, providing efficient setting.

Notification with a beep sound, a display indicator, and vibration

SR type / XD type

In addition to a beeper, visual and vibrating indicators provide silent confirmation of successful reads for noisy or sensitive environments.

HC type

Day and night `do-not-disturb' modes for scanner feedback, allowing users to mix and match between a visual (red and green LED), haptic (vibration) and audio (audible "beep" tone).

V410-H: Available Codes

Liner

Stacked — PDF417, GS1 Databar

2D — Data Matrix, QR, Micro QR

Please see the Ratings and Specifications for a complete list of supported symbologies.

Ordering Information

Code Reader

Type	Model
V410-H XD Handheld Reader, Black Grey, Wired, with X-Mode	**V410-HDS4608XD**
V410-H SR Handheld Reader, Black Grey, Wired	**V410-HDS4608SR**
V410-H HC Handheld Reader, White, Wired	**V410-HDS4608HC**

Accessories

Type	Model
Presentation Stand, V410-H	**V410-AS0**
Cable Assembly, Style 3 USB, 7 Ft, Mod Plug	**V410-WUB-2M**
Cable Assembly, RS232, DB9F, TXD-2, 7 Ft, V410-H	**V410-WR-2M**
Kit, V410-H AC Power Supply 5.2VDC, 1.1A	**V410-AC0-1** *1

*1. This model is coming soon.

WebLinkPC

To download WebLinkPC, go to www.automation.omron.com/weblinkpc.
Use WebLinkPC version.2.0.0 or higher for V410-H.

Handheld Code Reader V410-H series

Ratings and Specifications

V410-H	XD	SR	HC
Item	Description		
Physical Characteristics			
Dimensions	6.5 in. H x 2.6 in. W x 3.9 in. D 165 mm H x 67 mm W x 98 mm D		
Weight	5.7 oz. / 161.9 g		
Input Voltage Range	4.5 to 5.5 VDC Host Powered; 4.5 to 5.5 VDC External Power Supply		
Operating Current at Nominal Voltage (5.0V)	375 mA (typical)	340 mA (typical)	375 mA (typical)
Standby Current (Idle) at Nominal Voltage (5.0V)	150 mA (typical)		
Color	Black Grey	Black Grey	Healthcare White
Supported Host Interfaces	USB 1.1, RS-232		
USB Certification	USB 1.1 Certified		
Keyboard Support	Supports over 90 international keyboards		
Electronic Article Surveillance		Compatible with Checkpoint EAS deactivation system	
User Indicators	Direct Decode Indicator, Good Decode LEDs, rear view LEDs, beeper (adjustable tone and volume), haptic/ vibration	Direct Decode Indicator, Good Decode LEDs, rear view LEDs, beeper (adjustable tone and volume)	Direct Decode Indicator, Good Decode LEDs, rear view LEDs, beeper (adjustable tone and volume), haptic/ vibration
Performance Characteristics			
Light Source	Aiming Pattern: circular 528nm true green LED	Aiming Pattern: circular 617nm amber LED	Aiming Pattern: circular 528nm true green LED
Illumination	(2) Warm White LEDs	(2) 660nm Red LEDs	(2) Warm White LEDs
Imager Field of View	34° H x 21.6° V nominal	36.1° H x 22.6° V nominal	35° H x 22° V nominal
Image Sensor	1280 x 800 pixels		
Minimum Print Contrast	15% minimum reflective difference		
Skew Tolerance	+/- 60°		
Pitch Tolerance	+/- 60°		
Roll Tolerance	0° - 360°		
Imaging Characteristics			
Graphics Format Support	Images can be exported as Bitmap, JPEG, or TIFF		
Image Quality	96 PPI on an A4 document		
Environmental			
Operating Temperature	32.0° to 122.0° F / 0.0° to 50.0° C		
Storage Temperature	-40.0° to 158.0° F / -40.0° to 70.0° C		
Humidity	5% to 95% RH, non-condensing		
Drop Specification	Designed to withstand multiple drops at 6.0 ft./1.8 m to concrete		
Tumble Specification	Designed to withstand 2,000 tumbles in 1.5 ft./0.5 m tumbler		
Environmental Sealing	IP52		
Approved Cleaners	Standard disinfectants		
Electrostatic Discharge (ESD)	ESD per EN61000-4-2, +/-15 KV Air, +/-8 KV Direct, +/-8 KV Indirect		
Ambient Light Immunity	0 to 10,000 foot-candles / 0 to 107,600 lux		
Accessories	Gooseneck Intellistand		
Symbol Decode Capability			
1D	Code 39, Code 128, Code 93, Codabar/NW7, Code 11, MSI Plessey, UPC/EAN, I 2 of 5, Korean 3 of 5, GS1 DataBar, Base 32 (Italian Pharma)		
2D	PDF417, Micro PDF417, Composite Codes, TLC-39, Aztec, Data Matrix, QR Code, Micro QR, Han Xin, Postal Codes, SecurPharm, DotCode, Dotted Data Matrix		PDF417, Micro PDF417, Composite Codes, TLC-39, Aztec, Data Matrix, QR Code, Micro QR, Han Xin, Postal Codes, SecurPharm
OCR	OCR-A, OCR-B, MICR, US Currency		
Minimum Element Resolution	Code 39 - 2.0 mil	Code 39 - 3.0 mil	Code 39 - 2.0 mil
	Data Matrix - 4.0 mil	Data Matrix - 5.0 mil	Data Matrix - 4.0 mil
Decode Ranges (Typical; Printing resolution, contrast, and ambient light-dependent)			
Symbology/Resolution	Near/Far	Near/Far	Near/Far
Code 128: 2 mil	0.3 in. / 8 mm to 2.3 in. / 58 mm		
Code 128: 3 mil	0 in. / 0 mm to 3.5 in. / 88 mm		
Code 128: 5 mil		2.7 in. / 69 mm to 5.4 in. / 137 mm	1.7 in. / 43 mm to 5.0 in. / 127 mm
Code 128: 15 mil	4.2 in. / 107 mm to 8.6 in. / 218 mm		
Code 39: 2 mil	0.2 in. / 5 mm to 3.0 in. / 76 mm		
Code 39: 3 mil	0 in. / 0 mm to 3.8 in. / 96 mm	2.2 in. / 56 mm to 5.4 in. / 137 mm	1.3 in. / 33 mm to 6.0 in. / 152 mm
Code 39: 5 mil	0 in. / 0 mm to 5.2 in. / 132 mm	0.7 in. / 18 mm to 11.0 in. / 279 mm	0.1 in. / 3 mm to 11.5 in. / 292 mm
Code 39: 20 mil		0 in. / 0 mm to 44.0 in. / 1118 mm	0.6 in. / 15 mm to 29.0 in. / 737 mm

Handheld Code Reader V410-H series

V410-H	XD	SR	HC
Item	Description		
PDF417: 4 mil	0 in. / 0 mm to 3.3 in. / 84 mm		
PDF417: 5 mil	0 in. / 0 mm to 3.8 in. / 96 mm		
PDF417: 6.6 mil	0 in. / 0 mm to 4.5 in. / 114 mm		
PDF417: 6.7 mil		1.3 in. / 33 mm to 10.0 in. / 254 mm	0.6 in. / 15 mm to 9.3 in. / 236 mm
UPC: 13 mil (100%)	0 in. / 0 mm to 8.5 in. / 215 mm	0 in. / 0 mm to 28.0 in. / 711 mm	0 in. / 0 mm to 18.0 in. / 457 mm
Data Matrix: 4 mil	0.2 in. / 5 mm to 2.8 in. / 71 mm		
Data Matrix: 5 mil	0 in. / 0 mm to 3.4 in. / 86 mm		
Data Matrix: 10 mil	0 in. / 0 mm to 4.8 in. / 122 mm	1.0 in. / 25 mm to 11.5 in. / 292 mm	0.2 in. / 5 mm to 9.5 in. / 241 mm
QR Code: 10 mil	0 in. / 0 mm to 4.5 in. / 114 mm		
QR Code: 20 mil		0 in. / 0 mm to 17.5 in. / 445 mm	0 in. / 0 mm to 13.5 in. / 343 mm
Utilities and Device Management			
WebLinkPC	Programs reader parameters, upgrades firmware, provides encoded barcode data, allows image-based troubleshooting		
Regulatory Compliance			
LED Safety Standard	IEC 62471 Exempt Risk Group		
EMC Standards	EN 55032, EN 55035, FCC Part 15, Subpart B (Class B)		
Safety Standards	EN 62368-1		
Certifications	RCM, EAC, BSMI, CE, cULus, KC		

Dimensions

(Unit: mm)

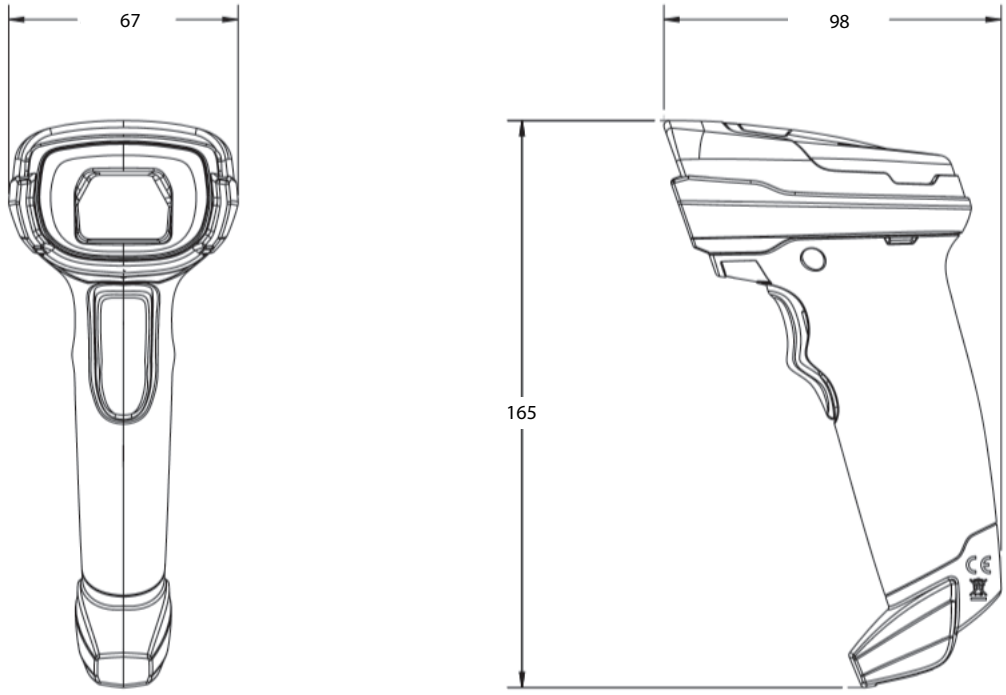

Note: Reader dimensions are the same for the V410-H XD, V410-H SR, and V410-H HC.

Handheld Code Reader V410-H series

Imager Field of View

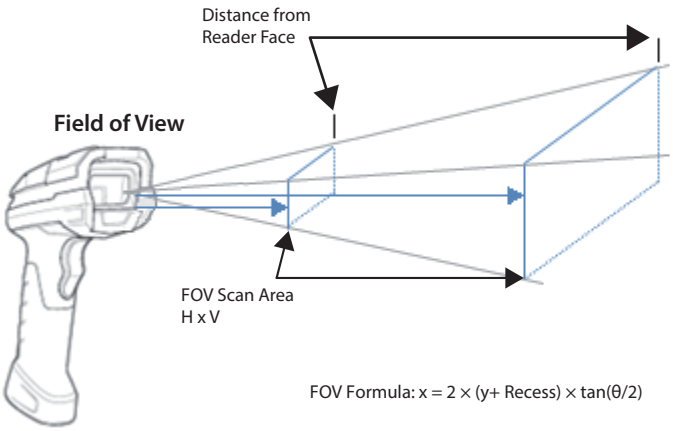

FOV Formula: x = 2 × (y+ Recess) × tan(θ/2)

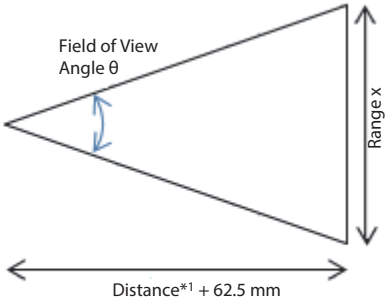

Note: The Recess value of 62.5 mm is the distance from the reader front face to the image sensor inside the reader. The Distance and Recess values are added together for the FOV Scan Area calculation.

*1. The Distance value is measured from the front face of the reader to the object being encoded.

XD: Image Field of View in degrees = 34 (horizontal) x 21.6 (vertical)

y (mm)	y + Recess	θ	Range x (mm)	FOV Scan Area H x V (mm)	Distance from Reader Face (mm)	FOV Scan Area H x V (in)	Distance from Reader Face (in)
5	67.5	34	41	41 x 26	5	1.6 x 1.0	0.2
5	67.5	21.6	26	-	-	-	-
71	133.5	34	82	82 x 51	71	3.2 x 2.0	2.8
71	133.5	21.6	51	-	-	-	-

SR: Image Field of View in degrees = 36.1 (horizontal) x 22.6 (vertical)

y (mm)	y + Recess	θ	Range x (mm)	FOV Scan Area H x V (mm)	Distance from Reader Face (mm)	FOV Scan Area H x V (in)	Distance from Reader Face (in)
25	87.5	36.1	57	57 x 35	25	2.2 x 1.4	1.0
25	87.5	22.6	35	-	-	-	-
445	507.5	36.1	331	331 x 203	445	13.0 x 8.0	17.5
445	507.5	22.6	203	-	-	-	-

HC: Image Field of View in degrees = 35 (horizontal) x 22 (vertical)

y (mm)	y + Recess	θ	Range x (mm)	FOV Scan Area H x V (mm)	Distance from Reader Face (mm)	FOV Scan Area H x V (in)	Distance from Reader Face (in)
3	65.5	35	41	41 x 25	3	1.6 x 1.0	0.1
3	65.5	22	25	-	-	-	-
292	354.5	25	223	223 x 138	292	8.8 x 5.4	11.5
292	354.5	22	138	-	-	-	-

Handheld Code Reader V410-H series

Configurations

USB

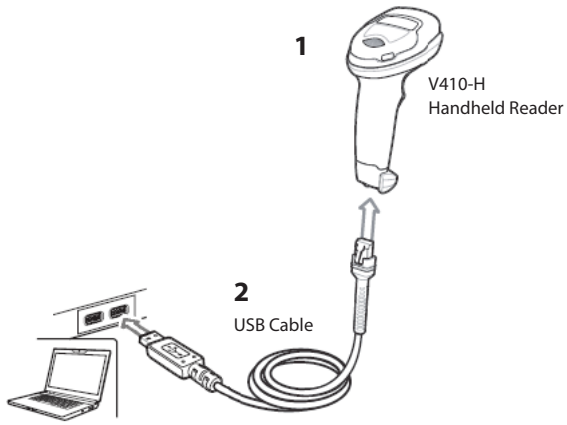

No.	Type	Model
1	V410-H XD Handheld Reader, Black Grey, Wired, with X-Mode	V410-HDS4608XD
	V410-H SR Handheld Reader, Black Grey, Wired	V410-HDS4608SR
	V410-H HC Handheld Reader, White, Wired	V410-HDS4608HC
2	Cable, USB, 7 ft., Mod Plug	V410-WUB-2M

RS-232

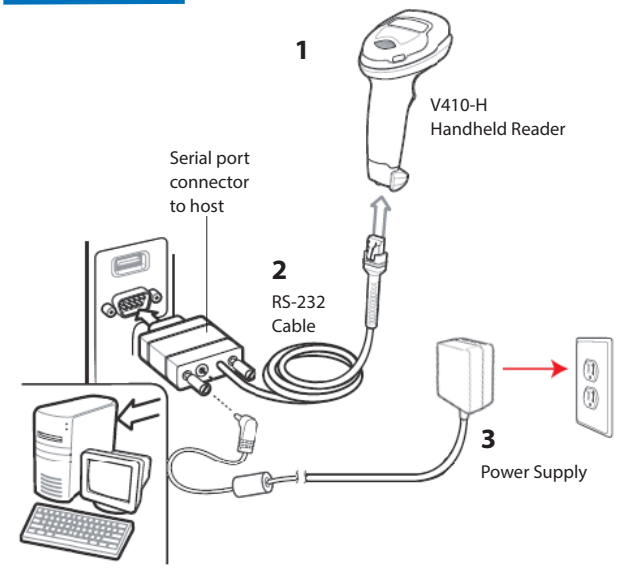

No.	Type	Model
1	V410-H XD Handheld Reader, Black Grey, Wired, with X-Mode	V410-HDS4608XD
	V410-H SR Handheld Reader, Black Grey, Wired	V410-HDS4608SR
	V410-H HC Handheld Reader, White, Wired	V410-HDS4608HC
2	Cable, RS-232, DB9F, TXD-2, 7 ft.	V410-WR-2M
3	Kit, V410-H AC Power Supply, 5.2 VDC, 1A	V410-AC0-1

Handheld Code Reader V410-H series

Related Manuals

Man. No.	Model	Manual
Z439 (84-9000362-02)	V410-HDS4608SR, V410-HDS4608XD, V410-HDS4608HC, V450-HDS3608-0001, V450-HDS3608-0002	V410-H and V450-H Handheld Barcode Reader User Manual

MEMO

Laser Barcode Reader

MS-3 series

Ultra-Compact Laser Barcode Reader

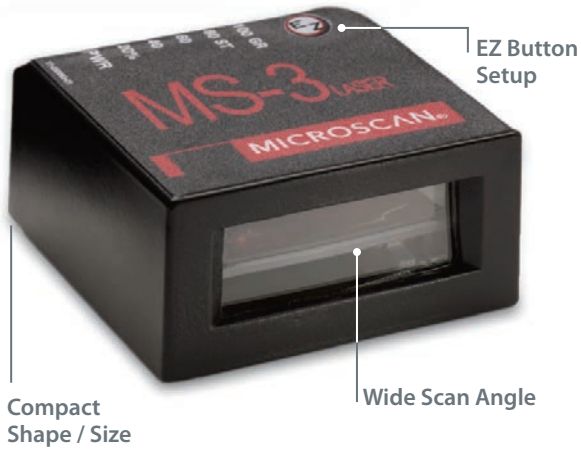

The MS-3 laser barcode reader offers the fastest read performance* in embedded compact bar code readers. The wide scan angle of 70 degrees is coupled with ultra-compact size and flexible mounting.

High performance and flexibility make the MS-3 the optimal choice for reliable reading in embedded instruments.

*.Based on Omron investigation in march 2018.

MS–3: At a Glance

- Decodes / second: up to 1000
- Read Range: 51 to 254 mm
- Wide Scan Angle
- IP54 Enclosure

ESP® Easy Setup Program: Single-point software provides quick and easy setup and configuration of all OMRON Microscan readers.

EZ Button: This performs reader setup and configuration with no computer required.

MS–3: Available Codes

Linear

Please see the Ratings and Specifications for a complete list of supported symbologies.

Compact & Lightweight
44.5 mm square by 21.6 mm tall code reader weighs only 57 g for easy mounting onto robotic equipment or into tight spaces.

High Scan Speed
Adjustable scan speed from 300 up to 1000 decodes per second and OMRON Microscan's world-class decode algorithms ensure accurate reading every time.

Wide Scan Angle
The wide scan angle of over 70 degrees and a factory customizable focal point add up to space savings within your system, allowing greater flexibility with positioning.

Visible Indicators
Illuminated LEDs on top of the code reader provide visual confirmation of the code reader performance.

Real-time Controls
The inputs include a trigger signal, a "new master" input, and a programmable input for resetting counters or releasing outputs. The outputs can be configured to activate upon a variety of conditions including matchcode and diagnostic operations.

Application Examples
- Clinical instruments
- Bank ATMs
- Parking kiosks
- Point-of-sale terminals
- Robotics

Laser Barcode Reader MS–3 series

Ordering Information

Laser Barcode Readers

Scan mode	Read range	Installation type	Model
Single Line	Low Density	Standard	**FIS-0003-0001G**
	High Density		**FIS-0003-0002G**
Raster Line	Low Density	Standard	**FIS-0003-0003G**
	High Density		**FIS-0003-0004G**
Single Line	Low Density	Right Angle	**FIS-0003-0005G**
Raster Line	Low Density	Right Angle	**FIS-0003-0007G**

Accessories

Type	Model
MS-Connect 210, Connectivity Box with Display	**FIS-0210-0001G**
Relay Module, 120 VAC, 3 Amp Output, Series 70, Type SM, for MS-Connect 210	**98-000013-04**
Relay Module, 240 VAC, 3 Amp Output, Series 70, Type SM, for MS-Connect 210	**98-000013-05**
Relay Module, 24 VDC, 3 Amp Output, Series 70, Type SM, for MS-Connect 210	**98-000013-06**
Cable, MS-3 to MS-Connect 210, 1.8 m (6 feet)	**61-000127-02**
IB-3PC Keyboard Wedge / Interface Box	**FIS-0001-0030G**
IC-3USB Interface Kit, USB to Serial 15-pin	**98-000051-01**
Converter, IC-332, 24 V / 5 V, Opto I / O for use with IB-131	**FIS-0001-0035G**
IB-131 Interface Box	**99-000018-01**
Communication Cable, DB-25 Plug to DB-9 Socket, 1.8 m (6 feet)	**61-300026-03**
Communication Cable, DB-9 Socket to DB-9 Socket, 1.8 m (6 feet)	**61-000010-02**
IB-131 Daisy Chain Cable	**61-100029-03**
Photoelectric Sensor, M12, 4-pin Plug, NPN output, Cable length 2m	**99-9000016-01**

Power Supplies

Type	Model
Power Supply, 100-240 VAC, +5 VDC, 5-pin Plug, U.S. / Euro Plug	**97-000011-01**
Power Supply, 100-240 VAC, +5 VDC, 2-pin Plug, U.S. / Euro Plug	**97-000011-02**
Power Supply, 100-240 VAC, +24 VDC, TRK 3-pin, U.S. / Euro Plug	**97-000012-02**

Note: Do not use the power supplies or power supply cords indicated in this catalog with any other electric or electronic equipment. When using the MS-3 Series, please use the power supply and power supply cord indicated in this catalog.

Mounting and Connectors

Type	Model
Mounting Arm / Adapter Kit for MS-3, 101 mm (4 inches)	**98-000048-01**
Mounting Stand Base Plate Kit	**98-000054-01**
Mounting Arm Extension Kit for MS-3, 101 mm (4 inches)	**98-000053-01**
Mounting Arm Extension Kit for MS-3, 76 mm (3 inches)	**98-000053-02**
Side Mount Bracket for MS-3	**98-000060-01**
Angle Mount Bracket for MS-3	**98-000059-01**
Through-Hole Mount Bracket for MS-3	**98-000057-02**
Extended Right Angle Mirror for MS-3	**98-000058-02**

Laser Barcode Reader MS–3 series

Ratings and Specifications

Applicable codes		Code 39, Code 128, Interleaved 2 of 5, Codabar, Code 93, UPC / EAN, Pharmacode
Reading performance	Scan mode	Single line, fixed raster
	Scan rate	Adjustable from 300 to 1,000 scans / s, default=500
	Scan width angle	>70°
	Pitch	±50°
	Skew	±40°
	Label contrast	25% min. at 650 nm
Communications	Interface	RS-232, RS-422 / 485, USB
	Protocols	Point-to-Point, Point-to-Point w / RTS / CTS, Point-to-Point w / XON / XOFF, Point-to-Point w / RTS / CTS & XON / XOFF, Polling Mode D, Multidrop, User Defined, User Defined Multidrop, Daisy Chain
I / O specifications	Trigger input	3 to 24 V rated (1 mA at 5 VDC)
	New Master	3 to 24 V rated (1 mA at 5 VDC)
	Outputs (1, 2, 3)	5 V TTL compatible, can sink 10 mA and source 2 mA
	Beeper	Good read, Match/Mismatch, Noread
	On / Off LEDs	1 status, 1 power, 5 read performance (representing percentage of good decodes)
Power requirement		5 VDC±5%, 200 mV p-p max. ripple, 260 mA at 5 VDC (typ.)
Laser light	Type	Semiconductor visible laser diode (650 nm nominal)
	Safety class	IEC 60825-1 Class II, 1.0 mW max.
Environmental specifications	Ambient temperature range	Operating: 0 to 50°C, Storage: -40 to 75°C
	Ambient humidity range	Up to 90% (with no icing or condensation)
	Operating life	40,000 hours at 25°C
	Degree of protection	IP54 (category 2)
Weight	Standard	Approx. 106 g
	Right Angle	Approx. 136 g
Safety standards		FCC, UL/c UL, CE, KC, RCM, EAC, BIS

HOST CONNECTOR / PIN ASSIGNMENTS
High Density 15 Pin D-sub Socket Connector

Pin No.	Host RS-232	Host / Aux RS-232	Host RS-422 / 485	In / Out
1	Power +5 VDC			In
2	TxD	TxD	TxD(–)	Out
3	RxD	RxD	RxD(–)	In
4	Power / Signal Ground			
5	NC			
6	RTS	Aux TxD	TxD(+)	Out
7	Output 1 TTL[a]			Out
8	Default configuration[b]			In
9	Trigger			In
10	CTS	Aux RxD	RxD(+)	In
11	Output 3 TTL[a]			Out
12	New Master (NPN)			In
13	Chassis ground[c]			
14	Output 2 TTL[a]			Out
15	NC			

a. Can sink 10 mA and source 2 mA.
b. The default is activated by connecting pin 8 to ground pin 4.
c. Chassis ground: Used to connect chassis body to earth ground only. Not to be used as power or signal return.

Laser Barcode Reader MS–3 series

Read Ranges

(Unit: mm)

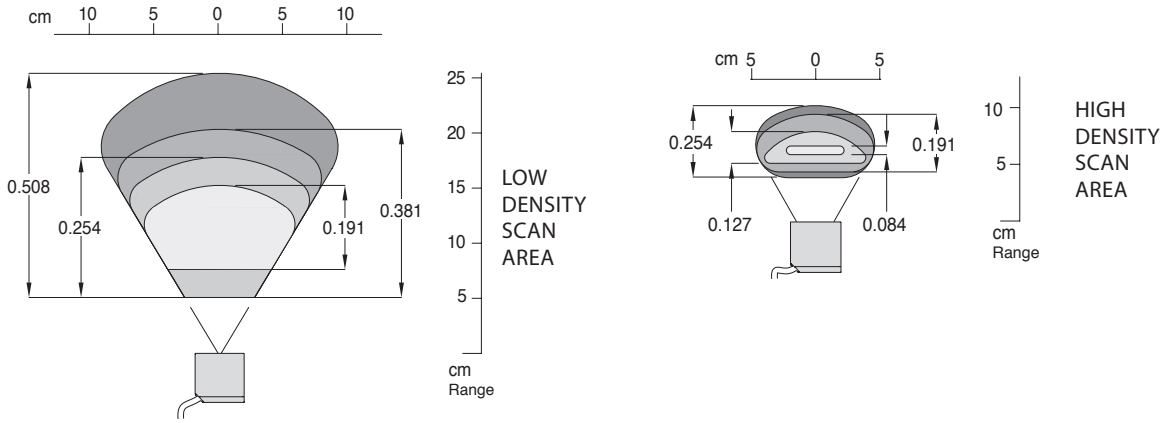

Narrow-bar-width	Read range
0.191 mm	76 to 152 mm
0.254 mm	51 to 178 mm
0.381 mm	51 to 203 mm
0.508 mm	51 to 254 mm

Narrow-bar-width	Read range
0.084 mm	Contact OMRON.
0.127 mm	51 to 79 mm
0.191 mm	43 to 94 mm
0.254 mm	38 to 102 mm

Note: For Right Angle option, subtract 15 mm from read range. Read ranges are based upon optimal scan speed for specific symbol density.

Dimensions

(Unit: mm)

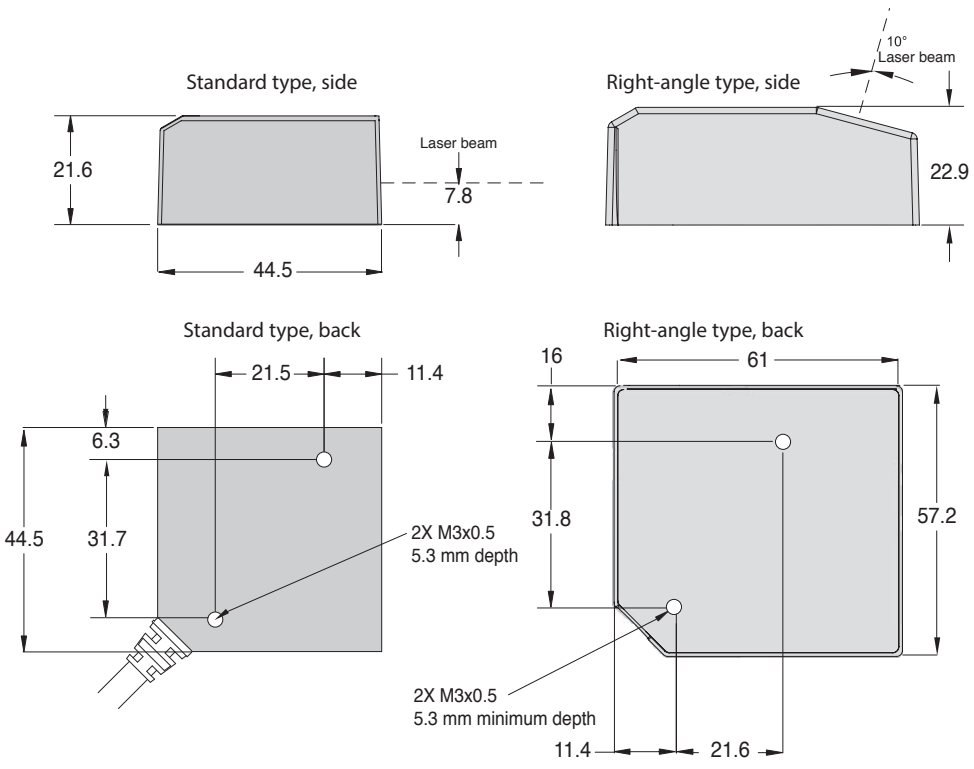

Laser Label Indications

This warning label is attached to the laser barcode reader.
Never remove this label or place objects in front of it.

Laser Barcode Reader MS–3 series

System Configurations

Stand Alone (5V)

This is the basic setup for a single MS-3.

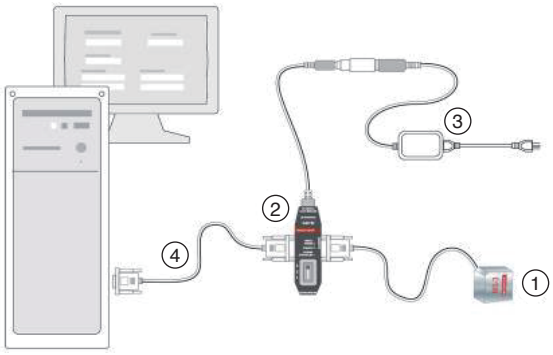

No.	Type	Model
1	MS-3 Laser Barcode Reader	FIS-0003-□□□□G
2	IB-3PC Keyboard Wedge / Interface Box	FIS-0001-0030G
3	Power Supply,100-240VAC,+5VDC, 5PIN, USA / EUR Plug	97-000011-01
4	Cable, Communication, DB-9 Socket-to-DB-9 Socket, 6 ft.	61-000010-02
-	Kit, Mounting Arm / Adapter, 4 in., for MS-3	98-000048-01
-	Kit, Mounting Stand Base Plate	98-000054-01

Stand Alone (10-28V)

With MS-Connect 210
This is the basic setup for a single MS-3 and MS-Connect 210.

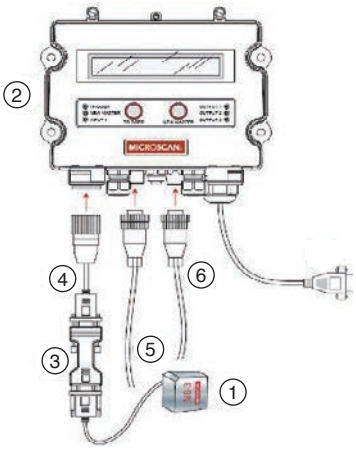

No.	Type	Model
1	MS-3 Laser Barcode Reader	FIS-0003-□□□□G
2	Connectivity Box A	FIS-0210-0001G
3	Converter, IC-332, 24V / 5V, Opto I / O, for Use with IB-131	FIS-0001-0035G
4	Cable, MS-3-to-MS-Connect 210, 6 ft.	61-000127-02
5	Power Supply (100-240 VAC, +24VDC, TRK 3Pin, USA/Euro Plug)	97-000012-02
6	Photoelectric Sensor, M12, 4-pin Plug, NPN output, Cable length 2m	99-9000016-01

Stand Alone (10-28V)

This is the basic setup for a single MS-3.

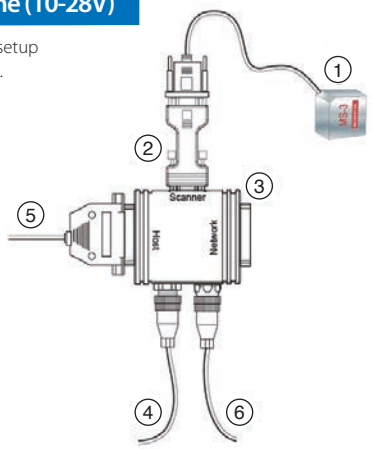

No.	Type	Model
1	MS-3 Laser Barcode Reader	FIS-0003-□□□□G
2	Converter, IC-332, 24V / 5V, Opto I / O, for Use with IB-131	FIS-0001-0035G
3	IB-131 Interface Box	99-000018-01
4	Power Supply (100-240 VAC, +24VDC, TRK 3Pin, USA / Euro Plug)	97-000012-02
5	Cable, Communication, DB-25 Plug-to-DB-9 Socket, 6 ft.	61-300026-03
6	Photoelectric Sensor, M12, 4-pin Plug, NPN output, Cable length 2m	99-9000016-01
-	Kit, Mounting Arm / Adapter, 4 in., for MS-3	98-000048-01
-	Kit, Mounting Stand Base Plate	98-000054-01

USB

Allows the code reader to be powered and communicate via a USB port (virtual com port).

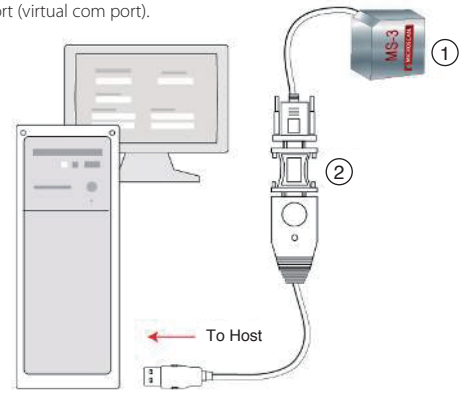

No.	Type	Model
1	MS-3 Laser Barcode Reader	FIS-0003-□□□□G
2	IC-3USB Interface Kit, USB-to-Serial, 15-Pin	98-000051-01
-	Kit, Mounting Arm / Adapter, 4 in., for MS-3	98-000048-01
-	Kit, Mounting Stand Base Plate	98-000054-01

Laser Barcode Reader MS–3 series

System Configurations

Daisy Chain

A primary code reader is linked directly to the host. Secondary code readers (up to 9) are linked in tandem. Data is sent from the primary code reader directly to the host.

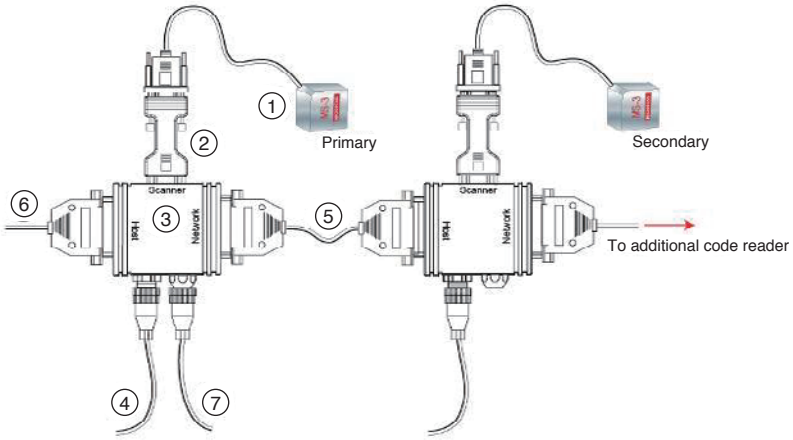

No.	Type	Model
1	MS-3 Laser Barcode Reader	FIS-0003-□□□□G
2	Converter, IC-332, 24V / 5V, Opto I / O, for Use with IB-131	FIS-0001-0035G
3	IB-131 Interface Box	99-000018-01
4	Power Supply (100-240 VAC, +24VDC, TRK 3Pin, USA / Euro Plug)	97-000012-02
5	Cable, Daisy Chain, IB-131	61-100029-03
6	Cable, Communication, DB-25 Plug-to-DB-9 Socket, 6 ft.	61-300026-03
7	Photoelectric Sensor, M12, 4-pin Plug, NPN output, Cable length 2m.	99-9000016-01
-	Kit, Mounting Arm / Adapter, 4 in., for MS-3	98-000048-01
-	Kit, Mounting Stand Base Plate	98-000054-01

Laser Barcode Reader

QX-830 series

Compact Industrial Laser Barcode Reader

The QX-830 laser barcode reader combines flexible connectivity with high performance decoding capabilities to reliably read 1D barcodes in almost any automation environment. In addition to the Quick Connect System and X-Mode Technology, the QX-830 features IP54 industrial sealing and optional embedded Ethernet protocols.

High performance, simple connectivity, and the highest quality enclosure make the QX-830 an ideal laser barcode reader for any industrial application.

QX–830: At a Glance

- Scans / second: 300 to 1400
- Read Range: 25 to 762 mm
- Optional Embedded Ethernet TCP / IP & EtherNet / IP
- IP54 Enclosure

ESP®Easy Setup Program: Single-point software solution provides quick and easy setup and configuration of all OMRON Microscan readers.

EZ Button: This performs reader setup and configuration with no computer required.

Visible Indicators: Performance indicators include "good read" green flash and LEDs.

QX Platform: Quick Connect system and X-Mode technology combine to provide simple connectivity, networking, and high performance decoding.

QX–830: Available Codes

Linear

Stacked — MicroPDF, PDF417, GS1 Databar

Please see the Ratings and Specifications for a complete list of supported symbologies.

Quick Connect System
- Plug and play setup
- Single or multi-code reader solutions

X-Mode Technology
- Decodes damaged, poorly printed, or misaligned codes
- Ensures high read rates and throughput

High Performance
Aggressive decoding capabilities allow reliable reading of barcodes out to 762 mm, at up to a 254 mm beam width.

Real-time Feedback
Visible LED indicators on the side of the code reader and a "good read" green flash projecting from the front window provide confirmation of the code reader's performance. The green flash is visible within a complete 360 degree radius from the code reader.

Ethernet Protocols
The QX-830 includes optional embedded Ethernet TCP / IP and EtherNet / IP for high speed communication.

Flexibility
The compact size of the QX-830 allows flexible positioning for a variety of applications.

Application Examples
- Any industrial environment from light to heavy duty
- Conveyor lines
- Packaging and sortation
- Electronics production
- Embedded within machinery

Laser Barcode Reader QX–830 series

Ordering Information

Laser Barcode Readers

Scan mode	Read range	Interface	Model
Single Line	Low Density	Serial *1	**FIS-0830-0001G**
	Middle Density		**FIS-0830-0002G**
	High Density		**FIS-0830-0003G**
Raster Line	Low Density	Serial *1	**FIS-0830-0004G**
	Middle Density		**FIS-0830-0005G**
	High Density		**FIS-0830-0006G**
	Low Density / Plastic Window		**FIS-0830-0010G**
Single Line	Low Density	Serial *2 and Ethernet	**FIS-0830-1001G**
	Middle Density		**FIS-0830-1002G**
	High Density		**FIS-0830-1003G**
Raster Line	Low Density	Serial *2 and Ethernet	**FIS-0830-1004G**
	Middle Density		**FIS-0830-1005G**
	High Density		**FIS-0830-1006G**
	Low Density / Plastic Window		**FIS-0830-1010G**

*1. Supports RS-232, RS-422, or RS-485.
*2. Supports RS-232.

Accessories

Type	Model
QX-1 Interface Device	**98-000103-02**
QX Cordset, Common, M12 12-pin Socket (Screw-On) to M12 12-pin Plug (Screw-On), 3 m	**61-000148-02**
QX Cordset, Common, M12 12-pin Socket (Screw-On) to M12 12-pin Plug (Screw-On), 1 m	**61-000162-02**
QX Cordset, Host, Serial, M12 12-pin Socket (Screw-On) to DB-9 Socket, 1 m	**61-000153-02**
QX Cordset, Host, Serial, M12 12-pin Socket (Screw-On) to DB-9 Socket, 3 m	**61-000164-02**
QX Cordset, Host, Serial, M12 12-pin Plug (Screw-On) to DB-9 Socket, 1 m	**61-000152-02**
QX Cordset, Host, Serial, M12 12-pin Plug (Screw-On) to DB-9 Socket, 3 m	**61-000165-02**
QX Cordset, Host, Ethernet, M12 8-pin Plug (Screw-On) to RJ45, 1 m	**61-000160-03**
QX Cordset, M12 12-pin Plug to M12 12-pin Socket to DB-25 Plug Turck Connectors	**61-000172-02**
QX Cordset, M12 12-pin Plug & M12 12-pin Socket to MS-Connect 210, RS-232, 2 m	**61-000158-03**
QX Cordset, M12 12-pin Plug (Screw-On) to Flying Leads, 3 m	**61-000166-02**
QX Cordset, M12 12-pin Plug & Socket to IB-131, RS-232, 2 m	**61-000159-03**
QX Cordset, M12 12-pin Socket to IB-131, RS-232/RS-485, 2 m	**61-000159-04**
Photoelectric Sensor, M12, 4-pin Plug, NPN output, Cable length 2m	**99-9000016-01**

Power Supplies

Type	Model
Power Supply, 100-240 VAC, +24 VDC, M12 12-pin Socket	**97-000012-01**
Power Supply, 100-240 VAC, +24 VDC, M12 12-Pin Plug	**97-000012-04**

Note: Do not use the power supplies or power supply cords indicated in this catalog with any other electric or electronic equipment. When using the QX-830 Series, please use the power supply and power supply cord indicated in this catalog.

Mounting and Connectors

Type	Model
Mounting Plate Kit for QX-830 / QX-870	**98-500006-01**
Right Angle Mirror Kit for QX-830	**98-200026-02**
Mounting Arm/Adapter Kit for QX-830 / QX-870, 152 mm (6 inches)	**98-000016-01**
Mounting Arm Extension Kit for all code readers,152 mm (6 inches)	**98-000037-01**
L-Bracket Kit for QX Series	**98-000148-01**
Mounting Stand Base Plate Kit	**98-000054-01**

Laser Barcode Reader QX–830 series

Ratings and Specifications

Applicable codes	Standard	Code 39, Codabar, Code 93, Interleaved 2 of 5, Code 128, PDF417, Micro PDF417, Pharmacode, UPC, GS1 Databar
	Application standards	UCC / EAN-128, AIAG
Reading performance	Mirror type	Rotating, 10-faceted
	Optional raster mirror image	10 raster scan lines over a 2° arc (or 0.500-inch raster height at 8-inch [203-mm] distance)
	Scan rate	Adjustable from 300 to 1,400 scans / s, default=500
	Scan width angle	60° (typ.)
	Pitch	±50° max.
	Skew	±40° max.
	Label contrast	25% min. absolute dark to light differential at 655 nm wavelength
Communications	Interface	RS-232 / 422 / 485 or Ethernet*
	Protocols	Point-to-Point, Point-to-Point w / RTS / CTS, Point-to-Point w / XON / XOFF, Point-to-Point w / RTS / CTS & XON / XOFF, Multidrop, Daisy Chain, User-Defined Multidrop, Ethernet TCP / IP, EtherNet / IP
I / O specifications	Input 1 / Trigger / New Master	Optoisolated, 4.5 to 28 V rated, (13 mA at 24 VDC) New Master is (–) to signal ground
	Outputs (1, 2 & 3)	Optoisolated, 1 to 28 V rated, (I_{CE} <100 mA at 24 VDC, current limited by user)
Power requirement		10 to 28 VDC, 200 mV p-p max. ripple, 180 mA at 24 VDC (typ.)
Laser light	Type	Laser diode
	Output wavelength	655 nm nominal
	Beam divergence	0.4 mrad (typ.)
	Pulse time	40 to 186 µs
	Maximum output	1.75mW
	Safety class	Visible laser: IEC 60825-1 Class 2
Environmental specifications	Ambient temperature range	Operating: 0 to 50°C, Storage: -40 to 75°C
	Ambient humidity range	Up to 90% (with no icing or condensation)
	Degree of protection	IP54
	Operating life	50,000 hours at 25°C
Weight		Approx. 212 g
Dimensions		35 x 65.7 x 87.8 mm (H x D x W)
Safety standards		FCC, UL/c UL, CE, CB, KC, RCM, EAC, BIS
Material (Case)		Aluminum diecast

* Depends on model. See Ordering Information for details.

PIN ASSIGNMENTS

CONNECTOR A
M12 12-PIN PLUG

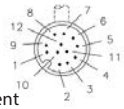

Pin Assignment

1	Trigger
2	Power
3	Default
4	New Master
5	Output 1
6	Output 3
7	Ground
8	Input Common
9	Host RxD
10	Host TxD
11	Output 2
12	Output Common

CONNECTOR B
M12 12-PIN SOCKET

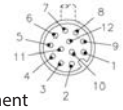

Pin Assignment

1	Trigger
2	Power
3	Terminated
4	Input 1
5	422/485 TxD (+)
6	422/485 RxD (+)
7	Ground
8	Input Common
9	TxD / RTS
10	RxD / CTS
11	422 / 485 TxD (–)
12	422 / 485 RxD (–)

ETHERNET CONFIGURATION

CONNECTOR B
M12 8-PIN SOCKET

Pin Assignment

1	Terminated
2	Terminated
3	Terminated
4	TX (–)
5	RX (+)
6	TX (+)
7	Terminated
8	RX (–)

Laser Barcode Reader QX–830 series

Read Ranges*

(Unit: mm)

Low Density Scan Area

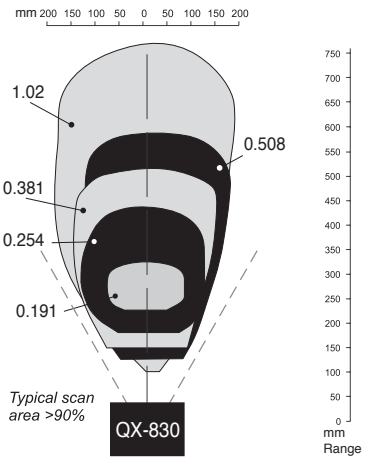

Narrow-bar-width	Read range
0.191 mm	254 to 305 mm
0.254 mm	178 to 406 mm
0.381 mm	152 to 483 mm
0.508 mm	127 to 559 mm
1.02 mm	102 to 762 mm

Medium Density Scan Area

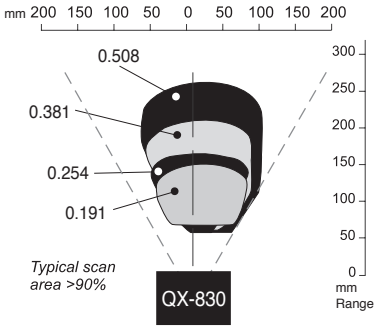

Narrow-bar-width	Read range
0.191 mm	64 to 140 mm
0.254 mm	38 to 178 mm
0.381 mm	38 to 216 mm
0.508 mm	38 to 279 mm
0.762 mm	25 to 305 mm

High Density Scan Area

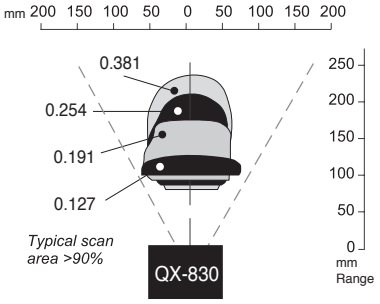

Narrow-bar-width	Read range
0.084 mm	Contact OMRON.
0.127 mm	102 to 127 mm
0.191 mm	89 to 171 mm
0.254 mm	82 to 203 mm
0.381 mm	82 to 229 mm

* Ranges based on a Grade A, Code 39 label, at 500 scans per second. Data subject to change.

Dimensions

(Unit: mm)

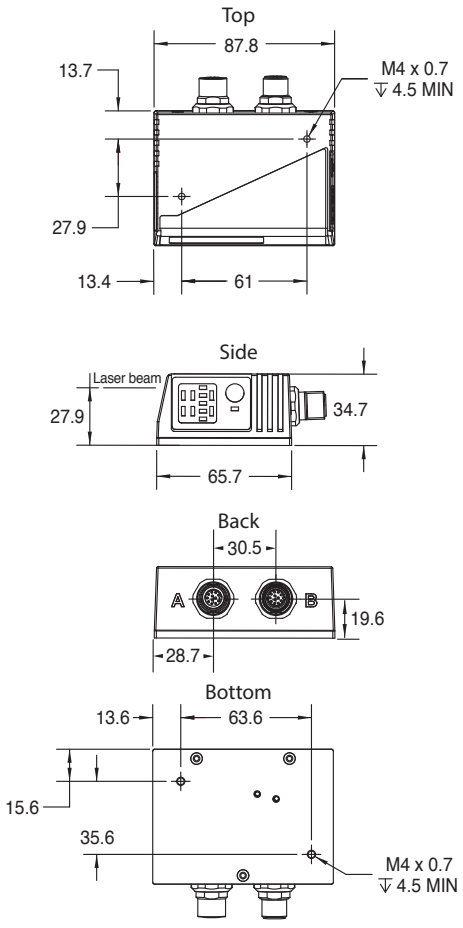

Laser Label Indications

This warning label is attached to the laser barcode reader. Never remove this label or place objects in front of it.

Laser Barcode Reader QX–830 series

System Configurations

Stand Alone Configurations

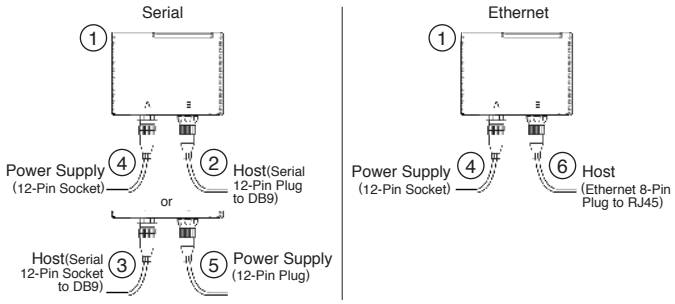

No.	Type	Model
1	QX-830 Laser Barcode Reader	FIS-0830-□□□□G
2	QX Cordset, Host, Serial, M12 12-Pin Plug (Screw-On)-to-DB-9 Socket, 1 m.	61-000152-02*
3	QX Cordset, Host, Serial, M12 12-Pin Socket (Screw-On)-to-DB-9 Socket, 1 m.	61-000153-02*
4	Power Supply, 100-240VAC, +24VDC, M12 12-Pin Socket	97-000012-01
5	Power Supply, 100-240VAC, +24VDC, M12 12-Pin Plug	97-000012-04
6	QX Cordset, Host, Ethernet, M8 8-Pin Plug (Screw-On)-to-RJ45, 1 m.	61-000160-03
-	Kit, 6 in. Mounting Arm / Adapter, QX-830, QX-870	98-000016-01
-	Kit, Mounting Stand Base Plate	98-000054-01

* Cordsets available in multiple lengths.

Stand Alone Configurations

With QX-1 or MS-Connect 210

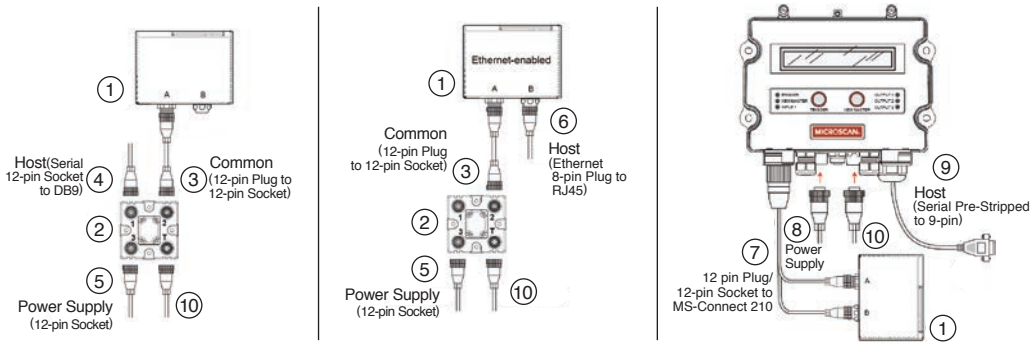

No.	Type	Model
1	QX-830 Laser Barcode Reader	FIS-0830-□□□□G
2	QX-1 Interface Device	98-000103-02
3	QX Cordset, Common, M12 12-Pin Socket (Screw-On)-to-M12 12-Pin Plug (Screw-On), 1 m.	61-000162-02*1
4	QX Cordset, Host, Serial, M12 12-Pin Socket (Screw-On)-to-DB-9 Socket, 1 m.	61-000153-02*1
5	Power Supply, 100-240VAC, +24VDC, M12 12-Pin Socket	97-000012-01
6	QX Cordset, Host, Ethernet, M12 8-Pin Plug (Screw-On)-to-RJ45, 1 m.	61-000160-03*1
7	QX Cordset, M12 12-Pin Plug & M12 12-Pin Socket-to-MS-Connect 210 (RS-232), 2 m.	61-000158-03
8	Power Supply, 100-240VAC, +24VDC, TRK 3-Pin, U.S. / Euro Plug)	97-000012-02
9	Connectivity Box	FIS-0210-0001G*2
10	Photoelectric Sensor, M12, 4-pin Plug, NPN output, Cable length 2m	99-9000016-01
-	Kit, 6 in. Mounting Arm / Adapter, QX-830, QX-870	98-000016-01
-	Kit, Mounting Stand Base Plate	98-000054-01

*1. Cordsets available in multiple lengths
*2. Refer to MS-Connection page for complete listing of MS-Connection 210 options

Laser Barcode Reader QX–830 series

System Configurations

Daisy Chain Configurations

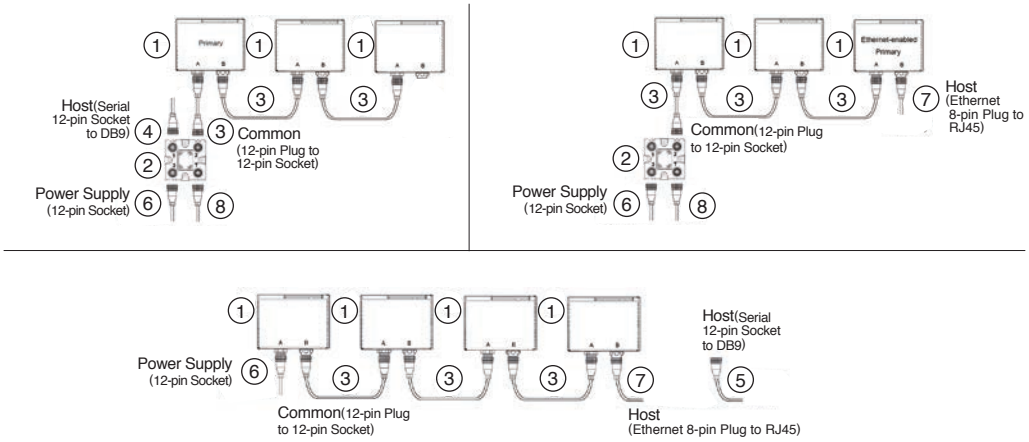

No.	Type	Model
1	QX-830 Laser Barcode Reader	FIS-0830-□□□□G
2	QX-1 Interface Device	98-000103-02
3	QX Cordset,Common,M12 12-Pin Socket(Screw-On)-to-M12 12-Pin Plug(Screw-On), 1 m.	61-000162-02*
4	QX Cordset, Host, Serial, M12 12-Pin Socket (Screw-On)-to-DB-9 Socket, 1 m.	61-000153-02*
5	QX Cordset, Host, Serial, M12 12-Pin Plug (Screw-On)-to-DB-9 Socket, 1 m.	61-000152-02*
6	Power Supply, 100-240VAC, +24VDC, M12 12-Pin Socket	97-000012-01
7	QX Cordset, Host, Ethernet, M8 8-Pin Plug (Screw-On)-to-RJ45, 1 m.	61-000160-03
8	Photoelectric Sensor, M12, 4-pin Plug, NPN output, Cable length 2m	99-9000016-01
-	Kit, 6 in. Mounting Arm / Adapter, QX-830, QX-870	98-000016-01
-	Kit, Mounting Stand Base Plate	98-000054-01

* Cordsets available in multiple lengths.

Related Manuals

Man.No.	Model	Manual
84-000830	QX-830	Compact Industrial Scanner User's Manual

Laser Barcode Reader

QX-870 series

Industrial Raster Laser Barcode Reader

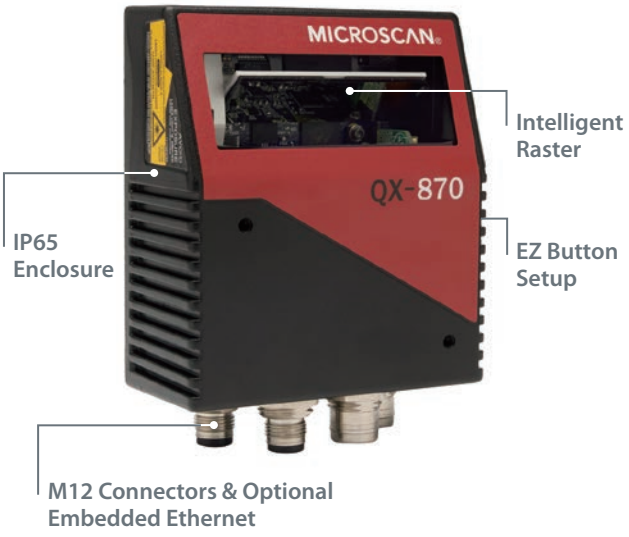

The QX-870 laser barcode reader partners the latest technologies in barcode reading and connectivity into an easy to use solution for barcode track, trace and control applications. Simple to set up and deploy, it features a programmable sweeping raster to read multiple codes, in varying locations, even if they are damaged or mis-aligned.

With plug and play setup and the most aggressive decode algorithms available, the QX-870 an ideal laser barcode reader for any industrial application.

QX–870: At a Glance

- Scans / second: 300 to 1400
- Read Range: 25 to 762 mm
- Optional Embedded Ethernet TCP / IP & EtherNet / IP
- IP65 Enclosure

ESP®Easy Setup Program: Single-point software solution provides quick and easy setup and configuration of all OMRON Microscan readers.

EZ Button: This performs reader setup and configuration with no computer required.

Visible Indicators: Performance indicators include "good read" green flash and LEDs.

Sweeping Raster: This programmable feature enables the reader for multiple symbols at varying distances and locations.

QX Platform: Quick Connect system and X-Mode technology combine to provide simple connectivity, networking, and high performance decoding.

QX–870: Available Codes

Linear

Stacked — MicroPDF, PDF417, GS1 Databar

Please see the Ratings and Specifications for a complete list of supported symbologies.

Quick Connect System
- Plug and play setup
- Single or multi-reader solutions

X-Mode Technology
- Decodes damaged, poorly printed, or misaligned codes
- Ensures high read rates and throughput

High Performance
Aggressive decoding capabilities allow reliable reading of barcodes out to 762 mm, at up to a 254 mm beam width.

Intelligent Raster
In addition to sweep angle and speed controls, the QX-870 features a programmable raster with intelligent auto framing technology. Advanced software will automatically frame the raster height and width of the laser to match the barcode, allowing selective targeting of codes within a single read cycle.

Ethernet Protocols
The QX-870 includes optional embedded Ethernet TCP / IP and EtherNet / IP for high speed communication.

Application Examples
- Any industrial environment from light to heavy duty
- Automotive assembly
- Packaging and sortation
- Electronics production
- Embedded within machinery

Laser Barcode Reader QX–870 series

Ordering Information

Laser Barcode Readers

Scan mode	Read range	Interface	Model
Sweeping Raster	Low Density	Serial *	**FIS-0870-0004G**
	Medium Density		**FIS-0870-0005G**
	High Density		**FIS-0870-0006G**
	Low Density / Plastic Window		**FIS-0870-0007G**
Sweeping Raster	Low Density	Serial * and Ethernet	**FIS-0870-1004G**
	Medium Density		**FIS-0870-1005G**
	High Density		**FIS-0870-1006G**

* Supports RS-232, RS-422, or RS-485.

Accessories

Type	Model
QX-1 Interface Device	**98-000103-02**
QX Cordset, Common, M12 12-pin Socket (Screw-On) to M12 12-pin Plug (Screw-On), 3 m	**61-000148-02**
QX Cordset, Common, M12 12-pin Socket (Screw-On) to M12 12-pin Plug (Screw-On), 1 m	**61-000162-02**
QX Cordset, Host, Serial, M12 12-pin Socket (Screw-On) to DB-9 Socket, 1 m	**61-000153-02**
QX Cordset, Host, Serial, M12 12-pin Socket (Screw-On) to DB-9 Socket, 3 m	**61-000164-02**
QX Cordset, Host, Serial, M12 12-pin Plug (Screw-On) to DB-9 Socket, 1 m	**61-000152-02**
QX Cordset, Host, Serial, M12 12-pin Plug (Screw-On) to DB-9 Socket, 3 m	**61-000165-02**
QX Cordset, Host, Ethernet, M12 8-pin Plug (Screw-On) to RJ45, 1 m	**61-000160-03**
QX Cordset, M12 12-pin Plug to M12 12-pin Socket to DB-25 Plug Turck Connectors	**61-000172-02**
QX Cordset, M12 12-pin Plug & M12 12-pin Socket to MS-Connect 210, RS-232, 2 m	**61-000158-03**
QX Cordset, M12 12-pin Plug (Screw-On) to Flying Leads, 3 m	**61-000166-02**
QX Cordset, M12 12-pin Plug & Socket to IB-131, RS-232, 2 m	**61-000159-03**
QX Cordset, M12 12-pin Socket to IB-131, RS-232 / RS-485, 2 m	**61-000159-04**
Photoelectric Sensor, M12, 4-pin Plug, NPN output, Cable length 2m	**99-9000016-01**

Power Supplies

Type	Model
Power Supply, 100-240 VAC, +24 VDC, M12 12-pin Socket	**97-000012-01**
Power Supply, 100-240 VAC, +24 VDC, M12 12-Pin Plug	**97-000012-04**

Note: Do not use the power supplies or power supply cords indicated in this catalog with any other electric or electronic equipment. When using the QX-870 Series, please use the power supply and power supply cord indicated in this catalog.

Mounting and Connectors

Type	Model
Mounting Plate Kit for QX-830 / QX-870	**98-500006-01**
Right Angle Mirror Kit for QX-830	**98-200026-02**
Mounting Arm / Adapter Kit for QX-830 / QX-870, 152 mm (6 inches)	**98-000016-01**
Mounting Arm Extension Kit for all code readers,152 mm (6 inches)	**98-000037-01**
L-Bracket Kit for QX Series	**98-000148-01**
Mounting Stand Base Plate Kit	**98-000054-01**

Laser Barcode Reader QX–870 series

Ratings and Specifications

Applicable codes	Standard	Code 39, Codabar, Code 93, Interleaved 2 of 5, Code 128, PDF417, Micro PDF417, Pharmacode, UPC, GS1 Databar
	Application standards	UCC / EAN-128, AIAG
Reading performance	Mirror type	Rotating, 10-faceted
	Scan rate	Adjustable from 300 to 1,400 scans/s, default=500
	Scan width angle	60° (typ.)
	Pitch	±50° max.
	Skew	±40° max.
	Label contrast	25% min. absolute dark to light differential at 655 nm wavelength
Communications	Interface	RS-232 / 422 / 485 and / or Ethernet*
	Protocols	Point-to-Point, Point-to-Point w / RTS / CTS, Point-to-Point w / XON / XOFF, Point-to-Point w / RTS / CTS & XON / XOFF, Multidrop, Daisy Chain, User-Defined Multidrop, Ethernet TCP / IP, EtherNet / IP
I / O specifications	Input 1 / Trigger / New Master	Bi-directional optoisolated 4.5 to 28 V rated (13 mA at 24 VDC)
	Outputs (1, 2 & 3)	Optoisolated, 1 to 28 V rated, (I_{CE} <100 mA at 24 VDC, current limited by user)
Power requirement		10 to 28 VDC, 200 mV p-p max. ripple, 270 mA at 24 VDC (typ.)
Laser light	Type	Laser diode
	Output wavelength	655 nm nominal
	Beam divergence	0.4 mrad (typ.)
	Pulse time	40 to 186 µs
	Maximum output	1.75 mW
	Operating life	50,000 hours at 25°C
	Safety class	Visible laser: IEC 60825-1 Class 2
Environmental specifications	Ambient temperature range	Operating: 0 to 50°C, Storage: -40 to 75°C
	Ambient humidity range	Up to 90% (with no icing or condensation)
	Degree of protection	IP65
Weight		Approx. 453 g
Dimensions		109 x 45 x 95 mm (H x D x W)
Safety standards		FCC, UL/c UL, CE, CB, KC, RCM, EAC, BIS
Material		Aluminum diecast

* Depends on model. See Ordering Information for details.

Raster Mirror Performance

Raster sweep angle	Maximum sweeps per second
1 to 10°	80
11 to 20°	60
21 to 34° (max.)	40
35 to 36° (max.)	20

PIN ASSIGNMENTS*

Connector A (Serial)
M12 12-pin plug

Pin	Assignment
1	Trigger
2	Power
3	Default
4	New Master
5	Output 1
6	Output 3
7	Ground
8	Input Common
9	Host RxD
10	Host TxD
11	Output 2
12	Output Common

Connector B (Serial)
M12 12-pin socket

Pin	Assignment
1	Trigger
2	Power
3	Terminated
4	Input 1
5	422 / 485 TxD (+)
6	422 / 485 RxD (+)
7	Ground
8	Input Common
9	TxD / RTS
10	RxD / CTS
11	422 / 485 TxD (–)
12	422 / 485 RxD (–)

Connector P / M (Serial)
M12 12-pin plug

Pin	Assignment
1	N / C
2	Power
3	N / C
4	N / C
5	422 / 485 TxD (+)
6	422 / 485 RxD (+)
7	Ground
8	N / C
9	N / C
10	N / C
11	422 / 485 TxD (–)
12	422 / 485 RxD (–)

Connector B (Ethernet)
M12 8-pin socket

Pin	Assignment
1	Terminated
2	Terminated
3	Terminated
4	TX (–)
5	RX (+)
6	TX (+)
7	Terminated
8	RX (–)

Connector T (Trigger)
M12 4-pin socket

Pin	Assignment
1	Power
2	Trigger
3	Ground
4	Input

*Note: Detailed connector pinout information is available in the User's Manual.

Laser Barcode Reader QX–870 series

Read Ranges*

(Unit: mm)

Low Density Scan Area

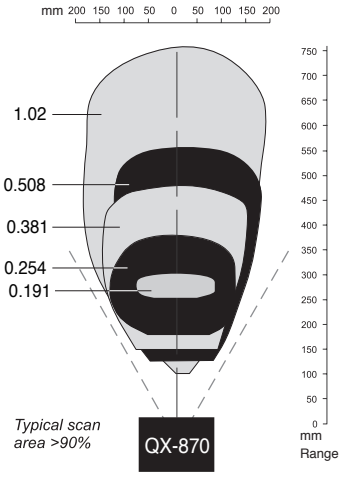

Narrow-bar-width	Read range
0.191 mm	254 to 305 mm
0.254 mm	178 to 381 mm
0.381 mm	152 to 483 mm
0.508 mm	127 to 558 mm
1.02 mm	102 to 762 mm

Medium Density Scan Area

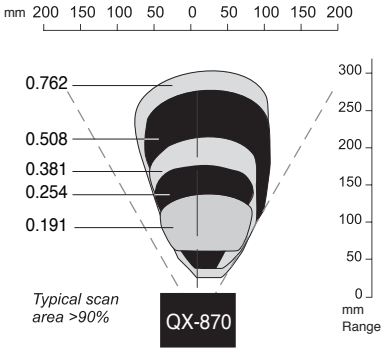

Narrow-bar-width	Read range
0.191 mm	64 to 140 mm
0.254 mm	38 to 178 mm
0.381 mm	38 to 216 mm
0.508 mm	38 to 280 mm
0.762 mm	25 to 304 mm

High Density Scan Area

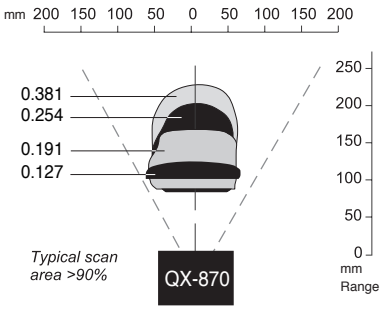

Narrow-bar-width	Read range
0.084 mm	Contact OMRON.
0.127 mm	102 to 127 mm
0.191 mm	89 to 171 mm
0.254 mm	82 to 203 mm
0.381 mm	82 to 228 mm

* Ranges based on a Grade A, Code 39 label, at 500 scans per second. Data subject to change.

Dimensions

(Unit: mm)

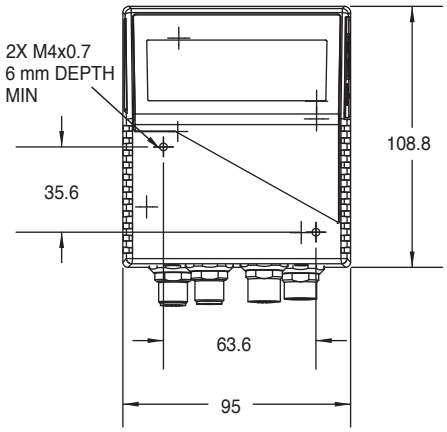

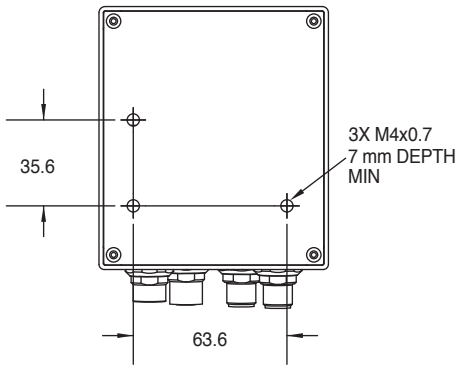

Laser Label Indications

This warning label is attached to the laser barcode reader.
Never remove this label or place objects in front of it.

Laser Barcode Reader QX–870 series

System Configurations

Stand Alone Configurations

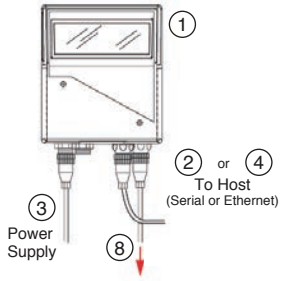

Important: Ethernet or Serial connectivity is reader dependent See FISes for the appropriate reader model.

MS-Connect 210

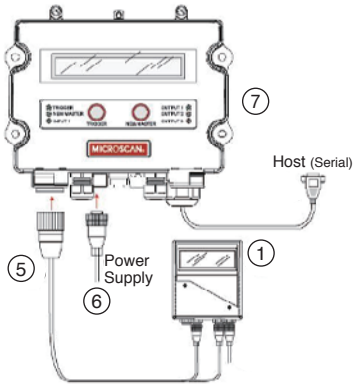

No.	Type	Model
1	QX-870 Laser Barcode Reader	FIS-0870-□□□□G
2	QX Cordset, Host, Serial, M12 12-Pin Plug (Screw-On)-to-DB-9 Socket, 1 m.	61-000152-02*1
3	Power Supply, 100-240VAC, +24VDC, M12 12-Pin Socket	97-000012-01
4	QX Cordset, Host, Ethernet, M8 8-Pin Plug (Screw-On)-to-RJ45, 1 m.	61-000160-03*1
5	QX Cordset, M12 12-Pin Plug & M12 12-Pin Socket-to-MS-Connect 210 (RS-232), 2 m.	61-000158-03
6	Power Supply, 100-240VAC, +24VDC, TRK 3-Pin, U.S. / Euro Plug)	97-000012-02
7	Connectivity Box	FIS-0210-0001G*2
8	Photoelectric Sensor, M12, 4-pin Plug, NPN output, Cable length 2m	99-9000016-01
-	Kit, 6 in. Mounting Arm / Adapter, QX-830, QX-870	98-000016-01
-	Kit, Mounting Stand Base Plate	98-000054-01

*1. Cordsets available in multiple lengths
*2. Refer to MS-Connection page for complete listing of MS-Connection 210 options

Daisy Chain Configurations

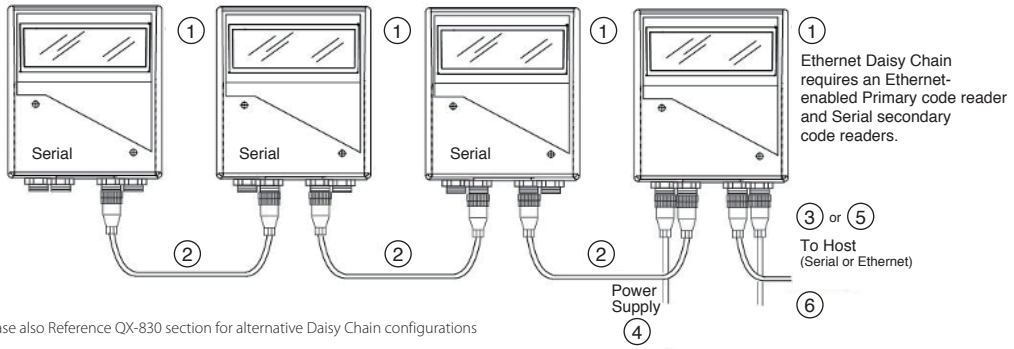

Please also Reference QX-830 section for alternative Daisy Chain configurations

No.	Type	Model
1	QX-870 Laser Barcode Reader	FIS-0870-□□□□G
2	QX Cordset, Common, M12 12-Pin Socket (Screw-On)-to-M12 12-Pin Plug (Screw-On),1 m.	61-000162-02*
3	QX Cordset, Host, Serial, M12 12-Pin Plug (Screw-On)-to-DB-9 Socket, 1 m.	61-000152-02*
4	Power Supply, 100-240VAC, +24VDC, M12 12-Pin Socket	97-000012-01
5	QX Cordset, Host, Ethernet, M8 8-Pin Plug (Screw-On)-to-RJ45, 1 m.	61-000160-03*
6	Photoelectric Sensor, M12, 4-pin Plug, NPN output, Cable length 2m	99-9000016-01
-	Kit, 6 in. Mounting Arm / Adapter, QX-830, QX-870	98-000016-01
-	Kit, Mounting Stand Base Plate	98-000054-01

* Cordsets available in multiple lengths

Related Manuals

Man.No.	Model	Manual
84-000870	QX-870	Industrial Raster Scanner User's Manual

MEMO

Code Verification System

LVS-9510 series

Desktop Barcode Verification System

Comes with handheld top cover (not shown) to keep label in position on viewing window.

The LVS-9510 is a high-performance system for off-line verification of barcodes to ISO / IEC, ANSI, GS1, and UDI standards.

The LVS-9510 is unique in the world of ISO verification due to its ease of use and ability to verify linear (1D) and two-dimensional (2D) codes without any change of equipment. The system automatically determines the symbology and aperture needed to evaluate the code and identifies and highlights trouble spots.

The LVS-9510 offers a "stitching" feature that allows grading of barcodes that are larger than the field of view.

LVS-9510: At a Glance

- Validates to ISO / IEC, ANSI, GS1, and UDI print quality standards.
- Software upgrade options include Multi-Sector for verification of multiple barcodes on a label.
- 21 CFR Part 11 compliant-ready.
- Certified by GS1 US.
- Supports 15 languages.
- Quality data reporting for auditing purposes.
- Manage operator permissions using LVS-95XX software or using Microsoft Active Directory.
- Includes NIST-Traceable Calibrated Conformance Standard Test Card for calibrating the system.

LVS-9510: Available Symbologies

Please see the Ratings and Specifications for a complete list of supported symbologies.

ISO / ANSI for 1D
LVS-95XX series barcode verifiers inspect all nine ISO / ANSI parameters for linear (1D) barcodes, have the ability to identify blemishes, and can perform simple human-readable validation.

ISO / ANSI for 2D
The LVS-95XX series verifies 2D codes and reports all parameters as specified in the applicable symbology specification.

Analytical Tools
Equipped with numerous analytical tools to identify and evaluate barcode errors. Problems are color-coded to make problem solving easy.

Software
LVS-95XX software includes GS1 System Symbol Specification Tables. GS1 tables set standards for barcode data structure and how to maintain the quality of codes during barcode creation. OMRON Microscan offers an online training course on GS1 tables and how these apply to different organizations.

Software Upgrade: EAIV
The Enhanced Application Identifier Verification (EAIV) option verifies that all GS1 Application Identifiers, such as Expiration Date, Global Trade Item Number (GTIN), and Batch Number, embedded in the data structure of a GS1 barcode match the data pr grammed in the EAIV feature by the user.

User Permission Options
Manage permissions through LVS-95XX software: Passwords are stored in a local database. All passwords are encrypted, include an expiration date, and count failed password attempts.

Manage permissions through Microsoft Active Directory: User privileges are based on Microsoft authentication and LVS-95XX permissions are assigned based on group membership.

Code Verification System LVS-9510 series

Ordering Information

Code Verification Systems

Type	Field of view	Model
LVS-9510 Verifier	76 mm	**9510-5-3.0**
	102 mm	**9510-5-4.0**
	114 mm	**9510-5-4.5**
	159 mm	**9510-5-6.250**

Note: Be sure to use the power supply and power supply cord included with the product.
In addition, do not use the power supplies or power supply cords with any other electric or electronic equipment.

Accessories

Type	Model
EAN / UPC Calibrated Conformance Test Card (Included with 9510-5-3.0 / 4.0 / 4.5 / 6 / 250)	**98-CAL020**
GS1-128 Calibrated Conformance Test Card (Included with 9510-5-6.250)	**98-CAL021**
LVS-9510 and LVS-958□ Software Upgrade Option: Multi-Sector Verification	**98-SOF0039**
LVS-95□□ Software Upgrade Option: Automatic Login Feature	**98-SOF0056**
Software Upgrade Option: EAIV (Enhanced Application Identifier Verification)	**98-SOF0088**
LVS-95□□ IQ-OQ Validation Procedure Guidelines, v. 4.3 and later (includes text cards)	**98-LVS0077**
Validation Test Cards (35 test cards)	**98-LVS-VTC**

Code Verification System LVS-9510 series

Ratings and Specifications

Supported standards	Application standards	AIAG / DAMA / JAPIA / Odette
		ALDI
		ISO / IEC TR 29158 (DPM Cat 0)
		DHL
		FPMAJ
		French CIP
		GS1 General Specifications
		HDMA Guidelines
		Health Industry Barcode (HIBC)
		IFAH
		ISO / IEC 15415 / 15416
		Italian Pharmacode
		Japan Codabar
		Laetus Miniature Pharmacode
		Laetus Pharmacode
		Laetus Standard
		MIL-STD-130N Change 1
		Pharmacy Product Number (PPN)
		Automatic GS1 or ISO
		Chinese Sensible (Han Xin) Code
		GS1 General Specifications
		GS1 (NTIN)
		HDMA Guidelines
		Miniature Pharmacode
		Postal (EIB, USPS IMB / Code 128, POSTNET, Japan Post)
		PPN Code
		PZN-big, normal, small (German Pharmacode)
		PZN 7 and PZN 8
	GS1 US certification	Data Matrix for Healthcare
		Data Matrix (ECC 200)
		EAN / UPC
		EAN / UPC and extended codes
		EAN / UPC with CC
		GS1 DataBar Omnidirectional
		ITF-14
		GS1 DataBar-14 with CC (formerly RSS-14 with CC)
		UCC / EAN with Supplementals
		UCC / EAN-128
		UCC / EAN-128 with CC
	ISO conformance standards	ISO / IEC 15415, 15416, 15418
		ISO / IEC 15426-1, 15426-2
		ISO / IEC TR29158 (DPM Cat 0) / AIM DPM-1-2006
		All supported ISO / IEC symbology specifications
Supported symbologies	Linear (1D) symbologies	Codabar
		Code 128, Code 39, Code 93
		GS1 DataBar Expanded and Limited
		DataBar
		DataBar Expanded and Limited
		DataBar Omnidirectional
		DataBar Stacked and Truncated
		EAN / JAN-13
		EAN / JAN-8
		Enterprise Intelligent Barcode (EIB) 4-State (4SB)
		GS1-128
		Hanxin Code
		HIBC
		Interleaved 2 of 5 (ITF)
		ITF-14
		Japan Post
		MSI Plessey
		Pharmacode–Italian and Laetus
		PZN 7, PZN 8
		UPC-A, UPC-E
		USPS-128
		USPS Intelligent Mail Barcode (4-State Customer Barcode)
	Two-dimensional (2D) symbologies	Aztec
		DataBar with CC-A, CC-B, or CC-C
		EAN / JAN-13 with CC-A, CC-B, or CC-C
		EAN / JAN-8 with CC-A, CC-B, or CC-C
		ECC-200 (Data Matrix) • EIB CMDM • French CIP • GS1 Data Matrix • NTIN and PPN
		GS1-128 with CC-A, CC-B, or CC-C
		MaxiCode
		Micro QR Code
		MicroPDF417
		PDF417
		QR Code
		UPC-A with CC-A, CC-B, or CC-C
		UPC-E with CC-A, CC-B, or CC-C

* Contact OMRON for a complete list of supported ECC-200 (Data Matrix) codes. CC=Composite Components

Code Verification System LVS-9510 series

Minimum PC requirements (PC supplied by customer)		• Windows® 7 Professional, Windows® 8.1 Pro, or Windows® 10 Pro • Intel® Core™ 2 Duo Processor or higher • 2 GB RAM • 800 x 600 screen resolution • One USB 2.0 port available per unit
Camera		Monochrome 5 million pixels
Illumination		White LED, red filter (660 nm)
Environmental specifications	Ambient temperature range	Operating: 10 to 30°C, Storage: 0 to 40°C
	Ambient humidity range	Operating: 20% to 80% (with no icing or condensation), Storage: 20% to 95% (with no icing or condensation)
Communications		USB 2.0 A plug to B plug cable, 1.8 m
Power voltage		12 VDC at 2.5 A max.
Weight	Unpackaged standalone	Approx. 2.72 kg
	Shipping weight	Approx. 5.89 kg (Includes all items packaged in shipping box, such as power supply and cables)
Dimensions		279.4 x 228.6 x 279.4 mm (H x D x W) (Includes rubber feet on system base)
Top cover	Dimensions	139.7 x 190.5 mm
	Weight	Approx. 155.92 g
Safety standards		FCC, CE, UL, KC
Calibrated Conformance Test Card (Included with system)		• Included with 9510-5-3.0: EAN / UPC Calibrated Conformance Standard Test Card • Included with 9510-5-4.0: EAN / UPC Calibrated Conformance Standard Test Card • Included with 9510-5-4.5: EAN / UPC Calibrated Conformance Standard Test Card • Included with 9510-5-6.250: GS1-128 Calibrated Conformance Standard Test Card
Calibrated Conformance Test Card (Option)		• EAN / UPC Calibrated Conformance Standard Test Card (Model: 98-CAL020) • GS1-128 Calibrated Conformance Standard Test Card (Model: 98-CAL021)

Options

Field of View Options

Model	Minimum X dimension (nominal)		Field of view (approximate)
	1D	2D	
9510-5-3.0	0.10 mm	0.15 mm	76 mm
9510-5-4.0	0.15 mm	0.23 mm	102 mm
9510-5-4.5	0.18 mm	0.25 mm	114 mm
9510-5-6.250	0.24 mm	0.33 mm	159 mm

Dimensions

(Unit: mm)

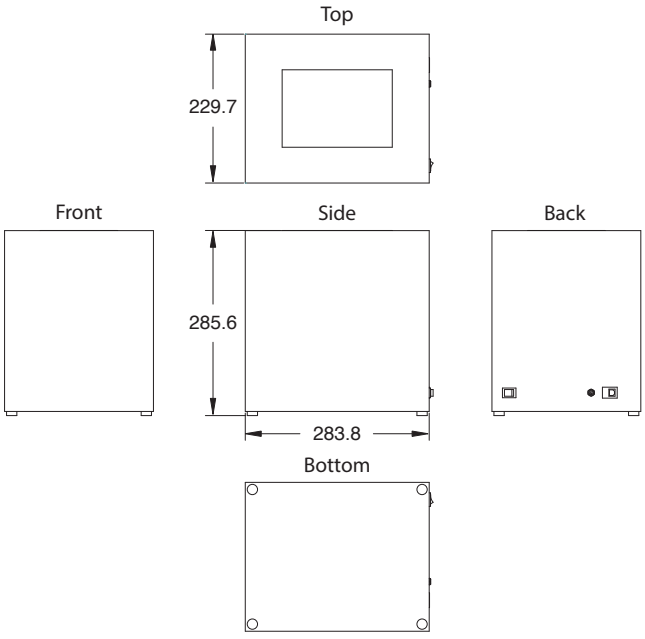

Related Manuals

Man.No.	Model	Manual
84-9310001-02	LVS-95□□	Barcode Quality Station Operations Manual
84-9310009-02	LVS-95□□	Software Installation Guide

Code Verification System

LVS-9585 series

Portable Barcode Verification System

The LVS-9585 is a high-performance handheld solution for off-line barcode verification to ISO / IEC, ANSI, and GS1 standards. Featuring a high-resolution 5.0 megapixel camera, the LVS-9585 reads and analyzes linear (1D) and two-dimensional (2D) codes up to 76.19 mm wide and up to 57.15 mm tall. 1D and 2D direct part marks (DPM) of up to 44 mm x 44 mm can be verified to MIL-STD-130, ISO, and GS1 standards.

The LVS-9585 verifies multiple symbologies, including any combination of linear, 2D (Data Matrix, QR Code, and Aztec Code), and stacked linear (PDF417, MicroPDF, and Composite codes).

Powered by a 2.0 m USB 2.0 cable, the LVS-9585 verifies barcodes on a wide range of surfaces including plastics, PCBs, metal, cardboard, and shipping containers.

LVS–9585: At a Glance

- Verify a broad variety of direct part marks as well as 1D and 2D printed barcodes with a single model.
- Software automatically selects best lighting performance from integrated red or white dome and 30° angle lighting.
- Validates printed barcodes to ISO / IEC, ANSI, GS1, and UDI print quality standards.
- Validates direct part marks (DPM) to ISO, MIL-STD-130, and GS1 standards.
- Software options include Multi-Sector for verification of multiple barcodes and GS1 AI content check.
- 21 CFR Part 11 compliant-ready.
- Supports 15 languages.
- Export verification reports to Excel or SQL database.
- Includes NIST-Traceable Calibrated Conformance Standard Test Card for calibrating the system.

LVS–9585: Available Symbologies

Please see Ratings and Specifications for a complete list of supported symbologies.

ISO/ANSI for 1D
LVS-95XX series barcode verifiers inspect all nine ISO and ANSI parameters for linear (1D) barcodes, have the ability to identify blemishes, and can perform simple human-readable validation.

ISO/ANSI for 2D
The LVS-95XX series verifies 2D codes and reports all parameters as specified in the applicable symbology specification.

Analytical Tools
Equipped with numerous analytical tools to identify and evaluate barcode errors. Problems are color-coded to make problem solving easy.

Software
LVS-95XX software includes GS1 System Symbol Specification Tables. GS1 tables set standards for barcode data structure and how to maintain the quality of codes during barcode creation.
OMRON Microscan offers an onlinetraining course on GS1 tables and how these apply to different organizations.

Software Upgrade: EAIV
The Enhanced Application Identifier Verification (EAIV) option verifies that all GS1 Application Identifiers, such as Expiration Date, Global Trade Item Number (GTIN), and Batch Number, embedded in the datastructure of a GS1 barcode match the data programmed in the EAIV feature by the user.

User Permission Options
Manage permissions through LVS-95XX software: Passwords are stored in a local database. All passwords are encrypted, include an expiration date, and count failed password attempts.

Manage permission through Microsoft Active Directory: User privileges are based on Microsoft authentication and LVS-95XX permissions are assigned based on group membership.

Portability
Connects to the latest Windows OS tablets.

Code Verification System LVS-9585 series

Ordering Information

Code Verification Systems

Type	Model
LVS-9585 Handheld 1D, 2D & DPM Barcode Verification, High Resolution	**9585-DPM-HD**
LVS-9585 Handheld 1D, 2D & DPM Barcode Verification, Red and White Light	**9585-DPM**

Accessories

Type	Model
EAN / UPC Calibrated Conformance Test Card	**98-CAL020**
GS1-128 Calibrated Conformance Test Card	**98-CAL021**
Data Matrix Calibrated Conformance Standard Test Card (for 9585-DPM-HD)	**98-CAL022**
LVS-9510 and LVS-958☐ Software Upgrade Option: Multi-Sector Verification	**98-SOF0039**
LVS-95☐☐ Software Upgrade Option: Automatic Login Feature	**98-SOF0056**
Software Upgrade Option: EAIV (Enhanced Application Identifier Verification)	**98-SOF0088**
LVS-9580 Upgrade (1D / 2D to DPM)	**98-SOF0095**
LVS-95☐☐ IQ-OQ Validation Procedure Guidelines, v. 4.3 and later (includes text cards)	**98-LVS0077**
Validation Test Cards (35 test cards)	**98-LVS-VTC**

Code Verification System LVS-9585 series

Ratings and Specifications

Supported standards	Application standards	AIAG / DAMA / JAPIA / Odette
		ALDI
		ISO / IEC TR 29158
		DHL
		FPMAJ
		French CIP
		GS1 General Specifications
		HDMA Guidelines
		Health Industry Barcode (HIBC)
		IFAH
		ISO / IEC 15415 / 15416
		Italian Pharmacode
		Japan Codabar
		Laetus Miniature Pharmacode
		Laetus Pharmacode
		Laetus Standard
		MIL-STD-130N Change 1
		Pharmacy Product Number (PPN)
		Automatic GS1 or ISO
		GS1 (NTIN)
		Miniature Pharmacode
		Postal (EIB, USPS IMB / Code 128, POSTNET, Japan Post)
		PZN-big, normal, small (German Pharmacode)
	GS1 US certification	Data Matrix for Healthcare
		Data Matrix (ECC 200)
		EAN / UPC
		EAN / UPC and Extended Codes
		EAN / UPC with CC
		GS1 DataBar Omnidirectional
		ITF-14
		GS1 DataBar-14 with CC (formerly RSS-14 with CC)
		UCC / EAN with Supplementals
		UCC / EAN-128
		UCC / EAN-128 with CC
	ISO conformance standards	ISO / IEC 15415, 15416, 15418
		ISO / IEC 15426-1, 15426-2
		ISO / IEC TR29158(DPM Cat 0, 1, 2) / AIM DPM-1-2006
		All supported ISO / IEC symbology specifications
Supported symbologies	Linear (1D) symbologies	Codabar
		Code 128, Code 39, Code 93
		GS1 DataBar Expanded and Limited
		DataBar
		DataBar Expanded and Limited
		DataBar Omnidirectional
		DataBar Stacked and Truncated
		EAN / JAN-13
		EAN / JAN-8
		Enterprise Intelligent Barcode (EIB) 4-State (4SB)
		French CIP
		GS1-128
		Hanxin Code
		HIBC
		Interleaved 2 of 5 (ITF)
		ITF-14
		Japan Post
		MaxiCode
		MSI Plessey
		Pharmacode–Italian and Laetus
		PZN 7 and PZN 8
		UPC-A and UPC-E
		USPS-128
		USPS Intelligent Mail Barcode (4-State Barcode)
	Two-dimensional (2D) symbologies	Aztec Code
		DataBar with CC-A, CC-B, or CC-C
		EAN / JAN-13 with CC-A, CC-B, or CC-C
		EAN / JAN-8 with CC-A, CC-B, or CC-C
		ECC-200 (Data Matrix)
		Enterprise Intelligent Barcode (EIB) Complex Mail Data Marks (CMDM)
		GS1-128 with CC-A, CC-B, or CC-C
		Micro QR Code
		MicroPDF417
		PDF417
		QR Code
		UPC-A with CC-A, CC-B, or CC-C
		UPC-E with CC-A, CC-B, or CC-C

* Contact OMRON for a complete list of supported ECC-200 (Data Matrix) codes.
CC=Composite Components

Code Verification System LVS-9585 series

Minimum PC requirements (PC supplied by customer)		• Windows®7 Pro SP1 or Windows®10 Pro • Intel® Core™ i3 or higher • 4 GB RAM • 800 x 600 screen resolution; • One USB 2.0 port available per unit
Field of view	DPM (9585-DPM)	44 x 44 mm
	HD (9585-DPM-HD)	33 x 25 mm
Minimum cell size	DPM (9585-DPM)	1D = 4.0 mils (0.10 mm) 2D = 5.9 mils (0.15 mm)
	HD (9585-DPM-HD)	2D = 2.0 mils (0.05 mm)
Camera		5 million pixels
		Object distance: Contact
Illumination		Red dome (660 nm), white dome, 30° angle
Environmental specifications	Ambient temperature range	Operating: 4 to 46°C, Storage: -20 to 60°C
	Ambient humidity range	Operating: 20% to 80% (with no icing or condensation), Storage: 20% to 95% (with no icing or condensation)
Communications		USB 2.0 A plug to Mini-B plug cable, 2 m
Power supply		USB powered 5 VDC at 400 mA
Weight	Unpackaged standalone	Approx. 0.68 kg
	Shipping weight	Approx. 1.51 kg (Includes all cables and other items packaged in shipping box)
Dimensions		215.9 x 139.7 x 120.6 mm (H x D x W)
Calibrated Conformance Test Card (Included with system)		• Included with 9585-DPM: EAN / UPC Calibrated Conformance Standard Test Card • Included with 9585-DPM-HD: Data Matrix Calibrated Conformance Standard Test Card
Safety standards		FCC, CE, UL, KC, RCM

Dimensions

(Unit: mm)

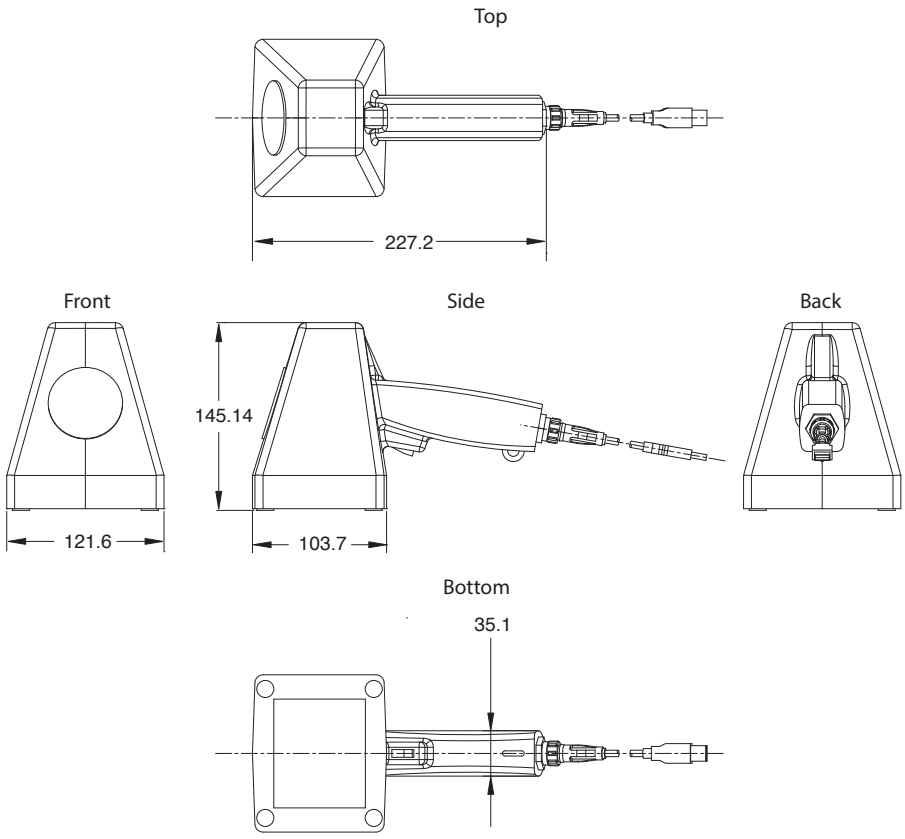

Related Manuals

Man.No.	Model	Manual
84-9310001-02	LVS-95□□	Barcode Quality Station Operations Manual
84-9310009-02	LVS-95□□	Software Installation Guide

Code Verification System

LVS-9580 series

Portable Barcode Verification System

Durable, portable handheld verifier

Weighs only 0.64kg

The LVS-9580 is a high-performance handheld solution for off-line barcode verification to ISO / IEC, ANSI, GS1, and UDI standards. Featuring a high-resolution 5.0 megapixel camera, the LVS-9580 reads and analyzes linear (1D) and two-dimensional (2D) codes up to 76.19 mm wide and up to 57.15 mm tall. 1D and 2D direct part marks (DPM) of up to 44 mm x 44 mm can be verified to MIL-STD-130, ISO, and GS1 standards.

The LVS-9580 verifies multiple symbologies, including any combination of linear, 2D (Data Matrix, QR Code, and Aztec Code), and stacked linear (PDF417, MicroPDF, and Composite codes).

Powered by a 2.0 m USB 2.0 cable, the LVS-9580 verifies barcodes on a wide range of surfaces including plastics, PCBs, metal, cardboard, and shipping containers.

LVS-9580: At a Glance

- Stitching feature to grade barcodes larger than the field of view.
- Ideal for multiple line production and warehouse environments.
- Validates printed barcodes to ISO / IEC, ANSI, GS1, and UDI print quality standards.
- Validates direct part marks (DPM) to ISO, MIL-STD-130, and GS1 standards.
- Software upgrade options include Multi-Sector for verification of multiple barcodes on a label.
- 21 CFR Part 11 compliant-ready.
- Supports 15 languages.
- Quality data reporting for auditing purposes.
- Includes NIST-Traceable Calibrated Conformance Standard Test Card for calibrating the system.

LVS-9580: Available Symbologies

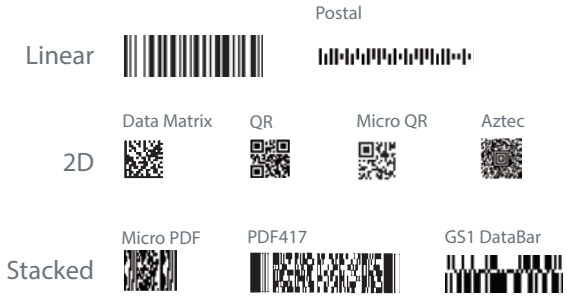

Please see the Ratings and Specifications for a complete list of supported symbologies.

ISO/ANSI for 1D
LVS-95XX series barcode verifiers inspect all nine ISO and ANSI parameters for linear (1D) barcodes, have the ability to identify blemishes, and can perform simple human-readable validation.

ISO/ANSI for 2D
The LVS-95XX series verifies 2D codes and reports all parameters as specified in the applicable symbology specification.

Analytical Tools
Equipped with numerous analytical tools to identify and evaluate barcode errors. Problems are color-coded to make problem solving easy.

Software
LVS-95XX software includes GS1 System Symbol Specification Tables. GS1 tables set standards for barcode data structure and how to maintain the quality of codes during barcode creation. OMRON Microscan offers an online training course on GS1 tables and how these apply to different organizations.

Software Upgrade: EAIV
The Enhanced Application Identifier Verification (EAIV) option verifies that all GS1 Application Identifiers, such as Expiration Date, Global Trade Item Number (GTIN), and Batch Number, embedded in the data structure of a GS1 barcode match the data programmed in the EAIV feature by the user.

User Permission Options
Manage permissions through LVS-95XX software: Passwords are stored in a local database. All passwords are encrypted, include an expiration date, and count failed password attempts.

Manage permissions through Microsoft Active Directory: User privileges are based on Microsoft authentication and LVS-95XX permissions are assigned based on group membership.

Portability
Connects to the latest Windows OS tablets.

Code Verification System LVS-9580 series

Ordering Information

Code Verification Systems

Type	Model
LVS-9580 Handheld 1D & 2D Barcode Verification	**9580-C-3**
LVS-9580 Handheld 1D, 2D & DPM Barcode Verification	**9580-DPM**
LVS-9580 Handheld 1D, 2D & DPM Barcode Verification, High Resolution	**9580-DPM-HD**

Accessories

Type	Model
EAN / UPC Calibrated Conformance Test Card	**98-CAL020**
GS1-128 Calibrated Conformance Test Card	**98-CAL021**
Data Matrix Calibrated Conformance Standard Test Card (for 9580-DPM-HD)	**98-CAL022**
LVS-9510 and LVS-958□ Software Upgrade Option: Multi-Sector Verification	**98-SOF0039**
LVS-95□□ Software Upgrade Option: Automatic Login Feature	**98-SOF0056**
Software Upgrade Option: EAIV (Enhanced Application Identifier Verification)	**98-SOF0088**
LVS-9580 Upgrade (1D / 2D to DPM)	**98-SOF0095**
LVS-95□□ IQ-OQ Validation Procedure Guidelines, v. 4.3 and later (includes text cards)	**98-LVS0077**
Validation Test Cards (35 test cards)	**98-LVS-VTC**

Ratings and Specifications

Supported standards	Application standards	AIAG / DAMA / JAPIA / Odette
		ALDI
		ISO / IEC TR 29158
		DHL
		FPMAJ
		French CIP
		GS1 General Specifications
		HDMA Guidelines
		Health Industry Barcode (HIBC)
		IFAH
		ISO / IEC 15415 / 15416
		Italian Pharmacode
		Japan Codabar
		Laetus Miniature Pharmacode
		Laetus Pharmacode
		Laetus Standard
		MIL-STD-130N Change 1
		Pharmacy Product Number (PPN)
		Automatic GS1 or ISO
		GS1 (NTIN)
		Miniature Pharmacode
		Postal (EIB, USPS IMB / Code 128, POSTNET, Japan Post)
		PZN-big normal small (German Pharmacode)
	GS1 (NTIN)	Data Matrix for Healthcare
		Data Matrix (ECC 200)
		EAN / UPC
		EAN / UPC and Extended Codes
		EAN / UPC with CC
		GS1 DataBar Omnidirectional
		ITF-14
		GS1 DataBar-14 with CC (formerly RSS-14 with CC)
		UCC / EAN with Supplementals
		UCC / EAN-128
		UCC / EAN-128 with CC
	ISO conformance standards	ISO / IEC 15415, 15416, 15418
		ISO / IEC 15426-1, 15426-2
		ISO / IEC TR29158 (DPM Cat 0) / AIM DPM-1-2006
		All supported ISO/IEC symbology specifications

Code Verification System LVS-9580 series

Supported symbologies	Linear (1D) symbologies	Codabar
		Code 128 Code 39 Code 93
		GS1 DataBar Expanded and Limited
		DataBar
		DataBar Expanded and Limited
		DataBar Omnidirectional
		DataBar Stacked and Truncated
		EAN / JAN-13
		EAN / JAN-8
		Enterprise Intelligent Barcode (EIB) 4-State (4SB)
		French CIP
		GS1-128
		Hanxin Code
		HIBC
		Interleaved 2 of 5 (ITF)
		ITF-14
		Japan Post
		MaxiCode
		MSI Plessey
		Pharmacode–Italian and Laetus
		PZN 7 and PZN 8
		UPC-A and UPC-E
		USPS-128
		USPS Intelligent Mail Barcode (4-State Barcode)
	Two-dimensional (2D) symbologies	Aztec Code
		DataBar with CC-A, CC-B, or CC-C
		EAN / JAN-13 with CC-A, CC-B, or CC-C
		EAN / JAN-8 with CC-A, CC-B, or CC-C
		ECC-200 (Data Matrix)
		Enterprise Intelligent Barcode (EIB) Complex Mail Data Marks (CMDM)
		GS1-128 with CC-A, CC-B, or CC-C
		Micro QR Code
		MicroPDF417
		PDF417
		QR Code
		UPC-A with CC-A, CC-B, or CC-C
		UPC-E with CC-A, CC-B, or CC-C
Minimum PC requirements (PC supplied by customer)		• Windows®7 Pro SP1 or Windows®10 Pro • Intel® Core™ i3 or higher • 4 GB RAM • 800 x 600 screen resolution • One USB 2.0 port available per unit
Field of view	Standard (9580-C-3)	76.19 mm horizontal 57.15 mm vertical
	DPM (9580-DPM)	44 x 44 mm
	HD (9580-DPM-HD)	33 x 25 mm
Minimum cell size	Standard (9580-C-3) DPM (9580-DPM)	1D = 4.0 mils (0.10 mm) 2D = 5.9 mils (0.15 mm)
	HD (9580-DPM-HD)	2D = 2.0 mils (0.05 mm)
Camera		5 million pixels
		Object distance: Contact
Illumination		Red dome (660 nm)
Environmental specifications	Ambient temperature range	Operating: 4 to 46°C, Storage: -20 to 60°C
	Ambient humidity range	Operating: 20% to 80% (with no icing or condensation), Storage: 20% to 95% (with no icing or condensation)
Communications		USB 2.0 A plug to Mini-B plug cable, 2 m
Power supply		USB powered 5 VDC at 400 mA
Weight	Unpackaged standalone	Approx. 0.64 kg
	Shipping weight	Approx. 1.81 kg (includes all cables and other items packaged in shipping box)
Dimensions		215.9 x 139.7 x 120.6 mm (H x D x W)
Calibrated Conformance Test Card (Included with system)		• Included with 9580-C-3: EAN / UPC Calibrated Conformance Standard Test Card • Included with 9580-DPM: EAN / UPC Calibrated Conformance Standard Test Card • Included with 9580-DPM-HD: Data Matrix Calibrated Conformance Standard Test Card
Safety standards		FCC, CE, UL, KC, RCM

* Contact OMRON for a complete list of supported ECC-200 (Data Matrix) codes.
CC=Composite Components

Code Verification System LVS-9580 series

Dimensions

(Unit: mm)

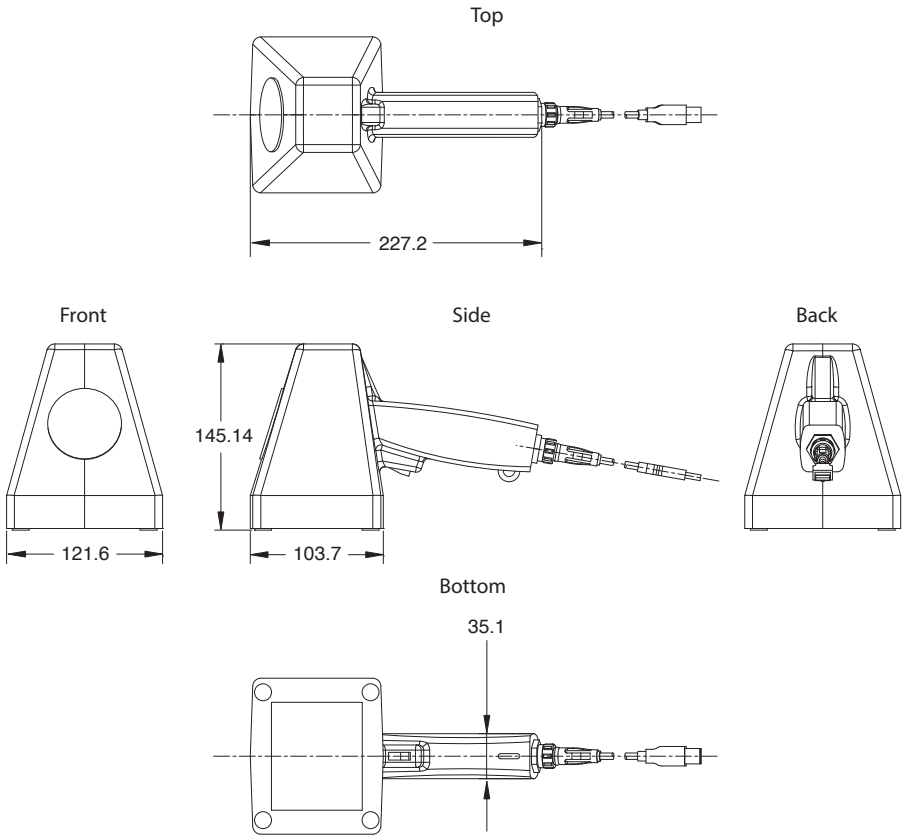

Related Manuals

Man.No.	Model	Manual
84-9310001-02	LVS-95□□	Barcode Quality Station Operations Manual
84-9310009-02	LVS-95□□	Software Installation Guide

MEMO

Terms and Conditions Agreement

Read and understand this catalog.

Please read and understand this catalog before purchasing the products. Please consult your OMRON representative if you have any questions or comments.

Warranties.

(a) Exclusive Warranty. Omron's exclusive warranty is that the Products will be free from defects in materials and workmanship for a period of twelve months from the date of sale by Omron (or such other period expressed in writing by Omron). Omron disclaims all other warranties, express or implied.

(b) Limitations. OMRON MAKES NO WARRANTY OR REPRESENTATION, EXPRESS OR IMPLIED, ABOUT NON-INFRINGEMENT, MERCHANTABILITY OR FITNESS FOR A PARTICULAR PURPOSE OF THE PRODUCTS. BUYER ACKNOWLEDGES THAT IT ALONE HAS DETERMINED THAT THE PRODUCTS WILL SUITABLY MEET THE REQUIREMENTS OF THEIR INTENDED USE.

Omron further disclaims all warranties and responsibility of any type for claims or expenses based on infringement by the Products or otherwise of any intellectual property right. (c) Buyer Remedy. Omron's sole obligation hereunder shall be, at Omron's election, to (i) replace (in the form originally shipped with Buyer responsible for labor charges for removal or replacement thereof) the non-complying Product, (ii) repair the non-complying Product, or (iii) repay or credit Buyer an amount equal to the purchase price of the non-complying Product; provided that in no event shall Omron be responsible for warranty, repair, indemnity or any other claims or expenses regarding the Products unless Omron's analysis confirms that the Products were properly handled, stored, installed and maintained and not subject to contamination, abuse, misuse or inappropriate modification. Return of any Products by Buyer must be approved in writing by Omron before shipment. Omron Companies shall not be liable for the suitability or unsuitability or the results from the use of Products in combination with any electrical or electronic components, circuits, system assemblies or any other materials or substances or environments. Any advice, recommendations or information given orally or in writing, are not to be construed as an amendment or addition to the above warranty.

See http://www.omron.com/global/ or contact your Omron representative for published information.

Limitation on Liability; Etc.

OMRON COMPANIES SHALL NOT BE LIABLE FOR SPECIAL, INDIRECT, INCIDENTAL, OR CONSEQUENTIAL DAMAGES, LOSS OF PROFITS OR PRODUCTION OR COMMERCIAL LOSS IN ANY WAY CONNECTED WITH THE PRODUCTS, WHETHER SUCH CLAIM IS BASED IN CONTRACT, WARRANTY, NEGLIGENCE OR STRICT LIABILITY.

Further, in no event shall liability of Omron Companies exceed the individual price of the Product on which liability is asserted.

Suitability of Use.

Omron Companies shall not be responsible for conformity with any standards, codes or regulations which apply to the combination of the Product in the Buyer's application or use of the Product. At Buyer's request, Omron will provide applicable third party certification documents identifying ratings and limitations of use which apply to the Product. This information by itself is not sufficient for a complete determination of the suitability of the Product in combination with the end product, machine, system, or other application or use. Buyer shall be solely responsible for determining appropriateness of the particular Product with respect to Buyer's application, product or system. Buyer shall take application responsibility in all cases.

NEVER USE THE PRODUCT FOR AN APPLICATION INVOLVING SERIOUS RISK TO LIFE OR PROPERTY OR IN LARGE QUANTITIES WITHOUT ENSURING THAT THE SYSTEM AS A WHOLE HAS BEEN DESIGNED TO ADDRESS THE RISKS, AND THAT THE OMRON PRODUCT(S) IS PROPERLY RATED AND INSTALLED FOR THE INTENDED USE WITHIN THE OVERALL EQUIPMENT OR SYSTEM.

Programmable Products.

Omron Companies shall not be responsible for the user's programming of a programmable Product, or any consequence thereof.

Performance Data.

Data presented in Omron Company websites, catalogs and other materials is provided as a guide for the user in determining suitability and does not constitute a warranty. It may represent the result of Omron's test conditions, and the user must correlate it to actual application requirements. Actual performance is subject to the Omron's Warranty and Limitations of Liability.

Change in Specifications.

Product specifications and accessories may be changed at any time based on improvements and other reasons. It is our practice to change part numbers when published ratings or features are changed, or when significant construction changes are made. However, some specifications of the Product may be changed without any notice. When in doubt, special part numbers may be assigned to fix or establish key specifications for your application. Please consult with your Omron's representative at any time to confirm actual specifications of purchased Product.

Errors and Omissions.

Information presented by Omron Companies has been checked and is believed to be accurate; however, no responsibility is assumed for clerical, typographical or proofreading errors or omissions.

Related products

Smart Camera
MicroHAWK F430-F/F420-F Series

- A single camera performing powerful inspection tasks and code reading
- Multiple cameras in one to enhance precision
- A single camera covering multiple parts that vary in size
- A single screen makes settings adjustments easy

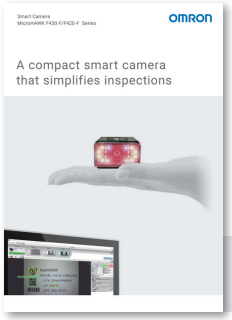

Please see our product catalog for details.
Cat. No. Q272

Parts included in this catalog are designed exclusively for use with industrial machines. Because this product does not fall under the scope of the Electrical Appliance and Material Safety Act, it cannot be connected to power supply equipment in houses, shops, small offices, etc. for use. Contact an OMRON sales representative for more information.

·EtherNet/IP™ is a trademark of ODVA.
·QR code is the registered trademark of DENSO WAVE.
·Windows is registered trademarks or trademarks of Microsoft Corporation in the United States and/or other countries.
·Intel and the Intel logo are trademarks of Intel Corporation in the U.S. and/or other countries.
·The Bluetooth® word mark and logos are registered trademarks owned by Bluetooth SIG, Inc. Any use of such marks by Omron is under license.
·Other company names and product names in this document are the trademarks or registered trademarks of their respective companies.
·The product photographs and figures that are used in this catalog may vary somewhat from the actual products.

Note: Do not use this document to operate the Unit.

OMRON Corporation **Industrial Automation Company**
Kyoto, JAPAN
Contact: www.ia.omron.com

Regional Headquarters
OMRON EUROPE B.V.
Wegalaan 67-69, 2132 JD Hoofddorp
The Netherlands
Tel: (31)2356-81-300/Fax: (31)2356-81-388

OMRON ELECTRONICS LLC
2895 Greenspoint Parkway, Suite 200
Hoffman Estates, IL 60169 U.S.A.
Tel: (1) 847-843-7900/Fax: (1) 847-843-7787

OMRON ASIA PACIFIC PTE. LTD.
No. 438A Alexandra Road # 05-05/08 (Lobby 2),
Alexandra Technopark,
Singapore 119967
Tel: (65) 6835-3011/Fax: (65) 6835-2711

OMRON (CHINA) CO., LTD.
Room 2211, Bank of China Tower,
200 Yin Cheng Zhong Road,
PuDong New Area, Shanghai, 200120, China
Tel: (86) 21-5037-2222/Fax: (86) 21-5037-2200

Authorized Distributor:

© OMRON Corporation 2018-2021 All Rights Reserved.
In the interest of product improvement,
specifications are subject to change without notice.

CSM_4_2
Cat. No. Q263-E1-07 0121 (1118)