Smart Camera
FHV7 Series

OMRON

The flexibility meets ever-changing needs

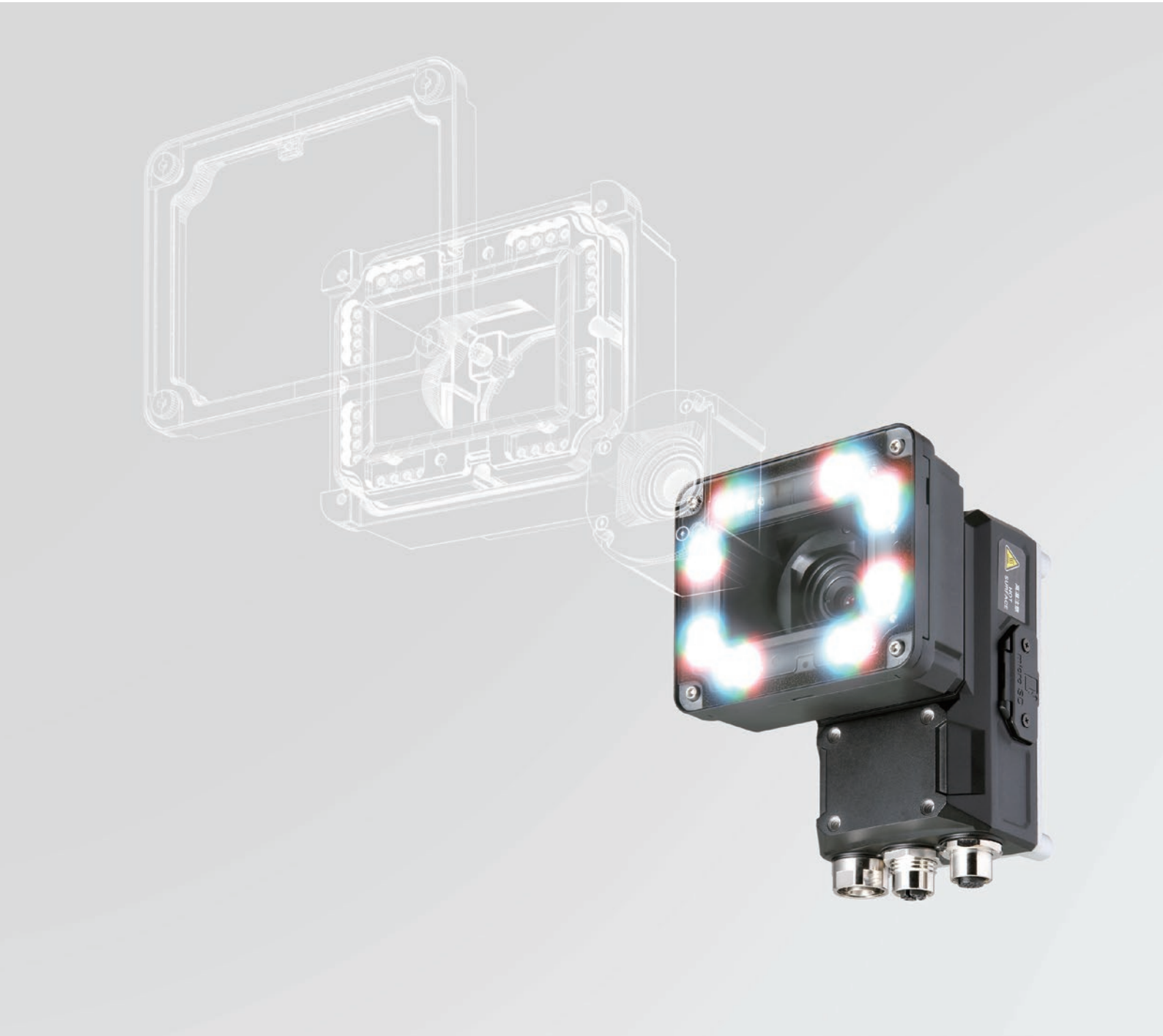

DESIGN AWARD 2020

GOOD DESIGN AWARD 2019

LEAP AWARDS Winner

Find out about Awards

sysmac always in control

Ultimate flexibility to fit ever-changing production scene

Nearly-infinite combination to fit any production scenes

P.4

Modular structure

The FHV7 Smart Camera allows you to flexibly combine a lens, light and image element, which are the important modules that determine the performance of a smart camera.
You can integrate multiple vision sensors installed at your production line into this FHV7 Smart Camera, which can be customized to meet your inspection and measurement needs.
By managing inventory of cameras based on modules, you can significantly reduce costs.

Single camera for inspecting various products

P.6

Multi-color Light, Autofocus Lens, 12 Mpix

Like human eyes, the FHV7 Smart Camera with the multi-color light, autofocus lens and 12 mega pixels for wider areas stably measures objects in different colors and sizes on the same production line. The illuminating colors and lens focuses can be adjusted by parameters, so the mechanism for replacing lights and moving cameras is no longer necessary. This feature greatly reduces the time required for design and adjustment and the number of machine components.

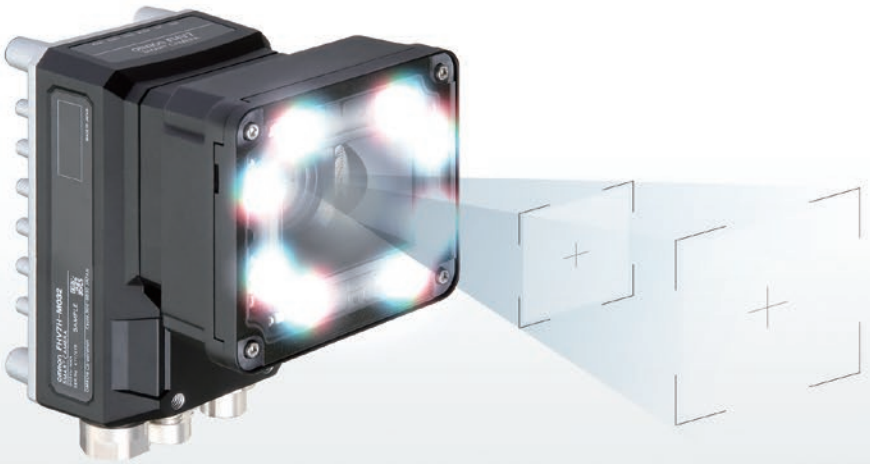

Raising production quality without sacrificing cycle time

P.8

Best-in-class speed *1

The inspection time can be reduced to 1/4 *2 of that required for existing models. This FHV7 Smart Camera enables you to keep the same cycle time even after you upgrade resolution or add inspection points.

*1. Based on Omron investigation in October 2018.
*2. Sample comparison to inspection time using vision sensors installed in customer's machine.
Based on Omron investigation in October 2018.

Nearly-infinite combination to fit any production

Smart Camera

PROFINET
EtherNet/IP
Ethernet
EtherCAT *1

Lenses

High-speed autofocus NEW
6/19 mm

Standard autofocus
6/9/12/16/25 mm

Module Auto-adjust function PATENT PENDING *2

This function automatically adjusts according to the mounted lens module so that the image sensor has uniform light sensitivity throughout its area.

C mount lenses (examples)

Image sensors (color/monochrome)

Global shutter	
0.4 Mpix	1.6 Mpix
3.2 Mpix	5 Mpix

Rolling shutter	
6.3 Mpix	12 Mpix

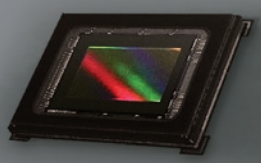

Waterproof hood

This component is required to ensure IP67 protection without using a lighting module.

*1. The FHV-SDU30 EtherCAT® Interface is required for EtherCAT connection.
*2. "Patent pending" means that we applied for a patent in Japan, and "Patented" means that we obtained a patent in Japan. (As of April 2019)

IP67 structure

Maintains IP67 waterproof structure even after module replacement, allowing use in wet conditions.

Captive screws

Captive screws are used in the modules.
The screws do not drop on products.

scenes

The FHV7 Smart Camera provides several options for components, allowing you to freely combine the lens and light with the camera and easily adjust the optical conditions to specific products. The footprint of the camera is not affected by module replacement. Even if a sudden change occurs in the product specification, the system can be ready after minimum rearrangement.
An all-in-one models with lens modules and light modules are also available.

Modules

Lights

Multi-color (R/G/B/IR)

Red

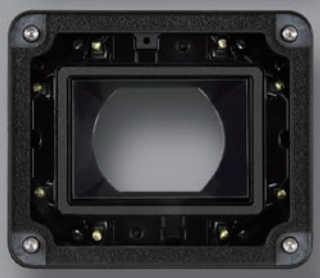

IR

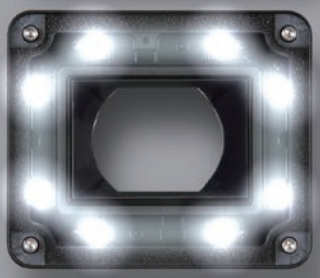

White

Easy connection with FLV/FL External Lights

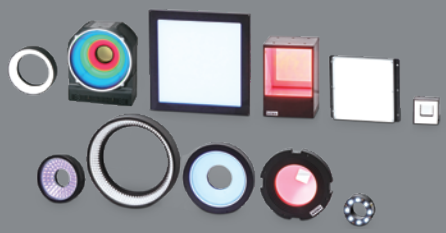

You can select from a broad lineup of more than 150 models.

Optical Filters

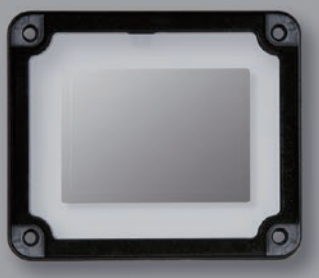

Diffusion filter

Polarization filter (visible light)

Polarization filter (infrared and visible light)

Easy addition of external lights

By connecting the lighting controller, you can, from FHV7's setting window, easily adjust the light emission intensity and set light emissions to synchronize with the release of the shutter.

Lighting Controller

Easy filter replacement

The light cover and optical filter are replaceable, so you don't need to prepare a protection cover against dirt.

Dirty cover filters can be removed separately for replacement

Single camera for inspecting various products

Multi-color Light

Accommodates color variations

Multi-color light provides a quick solution to the issue of measuring different colors. For example, objects with variously colored packages on a production line are properly measured with the light that changes its illumination color to fit each object. When the product design is changed or a new models is added, you can simply change a parameter instead of replacing or fine-tuning lights. The production line is always ready for a wider variety of product.

Autofocus Lens

Accommodates size variations

The autofocus lens covers a focal length range from 59 mm to 2,000 mm[*1]. Even when products in different sizes are produced, the focus range can be changed easily by parameters. [*2] This feature eliminates mechanical operation for changeover during product replacement, leading to a simpler system with higher productivity.

*1. Differs depending on the lens type. See the optical chart on page 49 for details.
*2. Set focuses for different product heights in advance and switch between them when you perform a changeover.

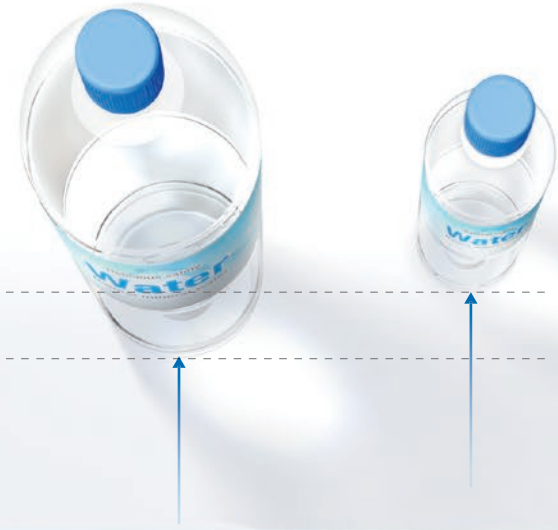

Best-in-class resolution[*3]: 12 megapixels

Location variation

The image sensor with a 12 megapixels enables high-precision inspections for wider areas. This eliminates the need for installing multiple cameras or a mechanism to move a camera to capture different inspection points on different models on the same production line.

*3. Based on Omron investigation in October 2018.

When inspecting products of different colors

As a product has more color options, some of the colors may cause low contrast under a single color illumination. The multi-color illumination allows switching colors for different product color options, ensuring stable inspections.

When inspecting products of different sizes

When inspecting products such as plastic bottles that come in different sizes, you can perform a changeover only by switching the setting of the autofocus lens. The autofocus lens does not need the mechanism for moving the camera.

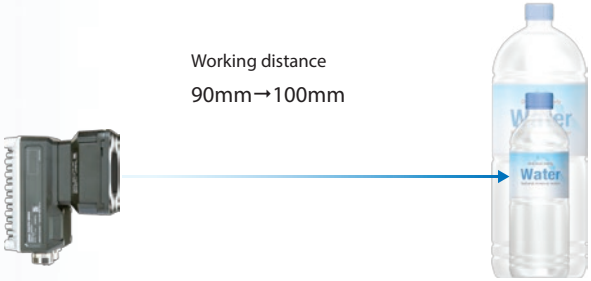

Always in focus even when the focal length changes

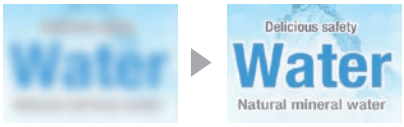

Expanding the range of parts inspection

Accurate and extensive inspection of parts mounting points on different automobile models is enabled without moving cameras.

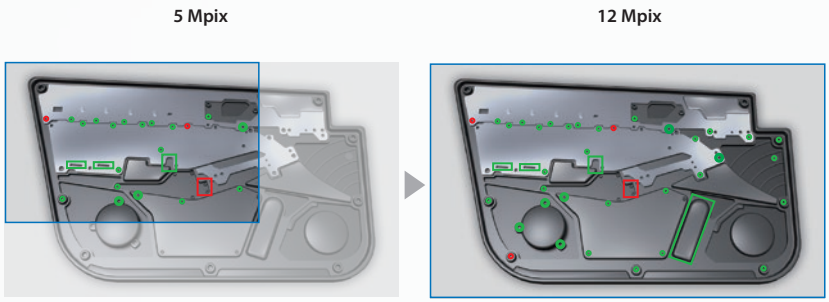

Raising production quality without sacrificing cycle time

Inspection time reduced to 1/4 *1

Time required for external inspection of cans *1

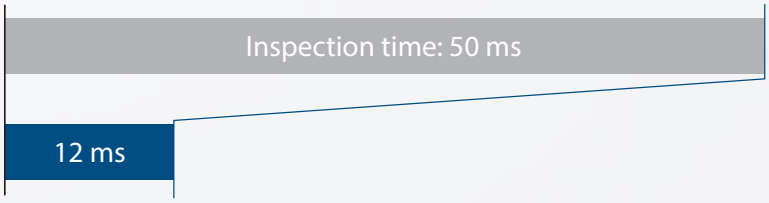

The inspection time can be reduced to 1/4 *1 of that required for existing sensors. You can carry out more precise, detailed quality inspection while keeping the same cycle time.

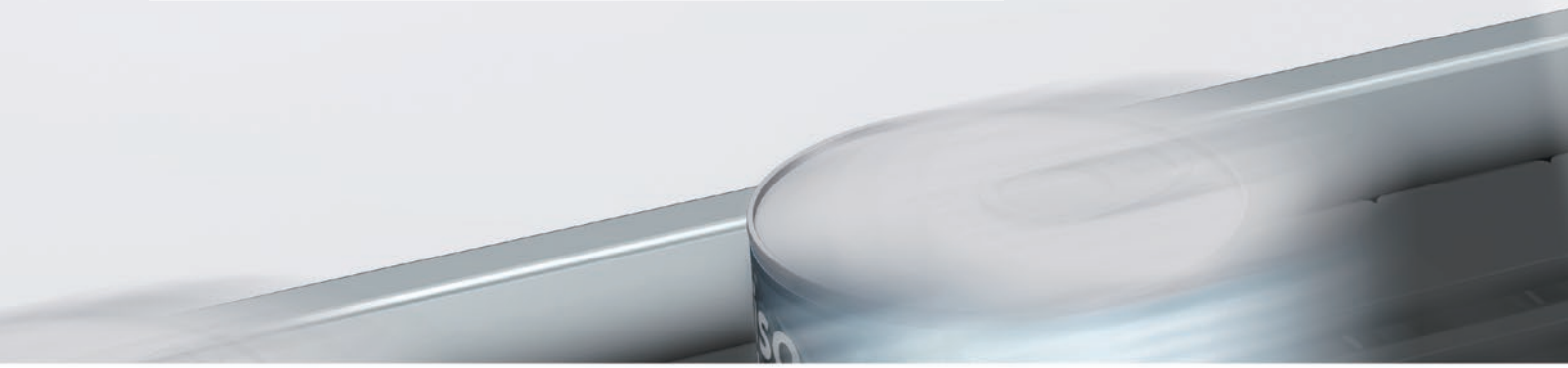

Clear images facilitate inspection

Precise inspection with high-resolution images is possible while keeping the same cycle time as before. The FHV7 Smart Camera raises production quality with its ability to detect tiny tears or scratches on labels, which could not be previously detected.

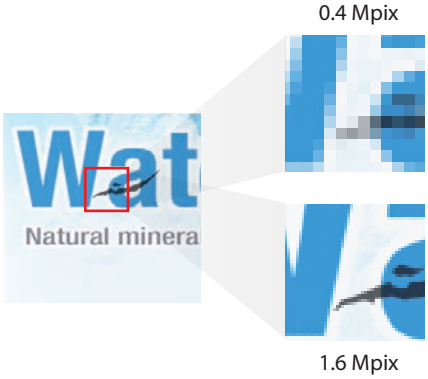

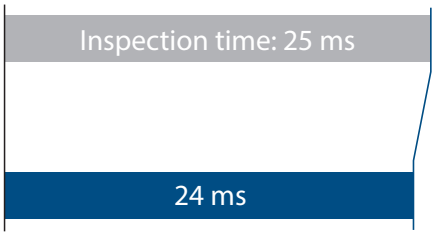

Shorter inspection time even when the number of pixels is increased

More inspection points

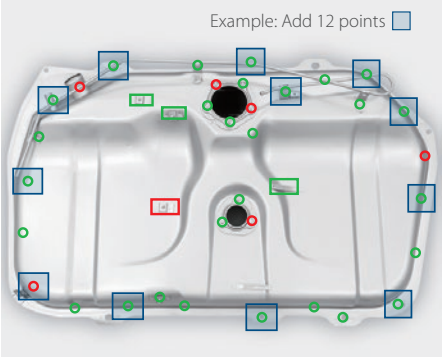

Green: Inspection passed, Red: Inspection failed

Best-in-class speed *2

Image capture: Maximum speed 2.3 ms

×

Distributed processing across 2 cores

×

High-speed algorithm

The FHV7 Smart Camera provides an optimal solution for a problem of longer cycle times caused by inspection points added to raise production quality. You don't need to divide the field of view into several parts and assign them to multiple cameras or install a high-speed vision system.

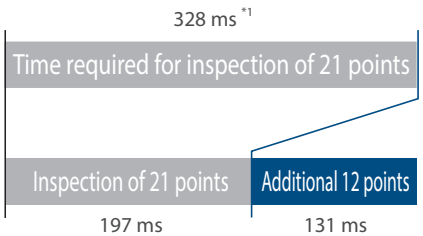

Settings can be adjusted with zero downtime

Measured values may change gradually due to workpiece variation or changes in external circumstance. Even in such cases, distributed processing across 2 cores allows you to perform cause analysis and setting adjustments as you make measurements. You can eliminate downtime and visual inspection of uninspected items.

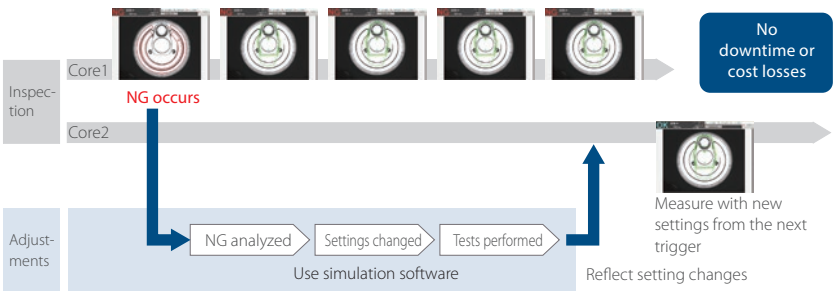

*1. Sample comparison to inspection time using vision sensors installed in customer's machine. Based on Omron investigation in October 2018
*2. Based on Omron investigation in October 2018.

Application Examples

Traceability and serial number management

The FHV7 Smart Camera is suitable for applications in which inspection results and images are managed by product serial numbers.

Stable reading regardless of printing quality

2D Code II delivers powerful code reading

The dedicated algorithm for stable 2D code reading under adverse conditions is implemented. Data based on the print quality specifications can be output, which contributes to stable printing.

Print Quality Grading Function

- ISO/IEC 15415
- ISO/IEC TR29158

Changing ambient brightness

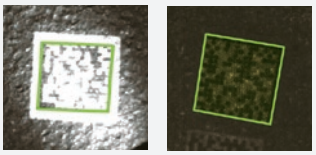

Chips due to reflection | Low contrast

After processing/washing

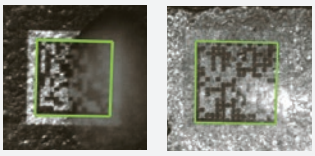

Waterdrops and dirt | Scratched damage

Poor printing quality in high-speed line

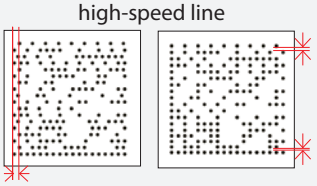

Variations in start positions | Uneven line spacing

Poor printing quality on coarse surface

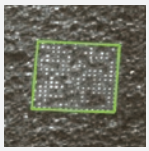

Molding variations of forged object

Stable reading of difficult-to-read characters (OCR)

Printed characters can be too close to each other, and characters can be printed on curved surfaces. Even in these cases, stable reading is possible. Also plus signs can be read.

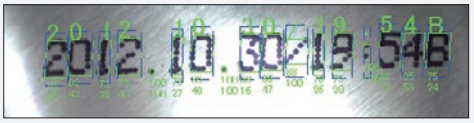

Touching characters

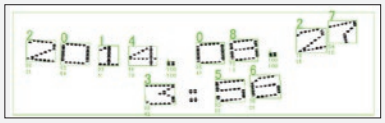

Curved character strings

Plus signs NEW

Easy installation with built-in dictionary

Many previous character reading methods required dictionary setup before usage, which was a tedious step. The built-in dictionary developed through our long and rich experiences on FA sites includes a variety of fonts and possible character variations, eliminating the need of dictionary setup. You can also add non-conventional characters when special fonts are read.

Characters from most printers can be read, including dot and impact printers.

Approx. 80 fonts are supported

Hot printer

Inkjet printer

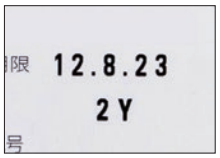

Thermal printer

Laser marker

Evidence management

High-speed image storage and image compression

Image data is so large that conventional controllers could not store all images due to limited storage time and storage capacity. The FHV7 Smart Camera has algorithms and hardware that can save images in Omron formats and compress image data at high speed, enabling all images to be stored to meet increasing needs in quality control.

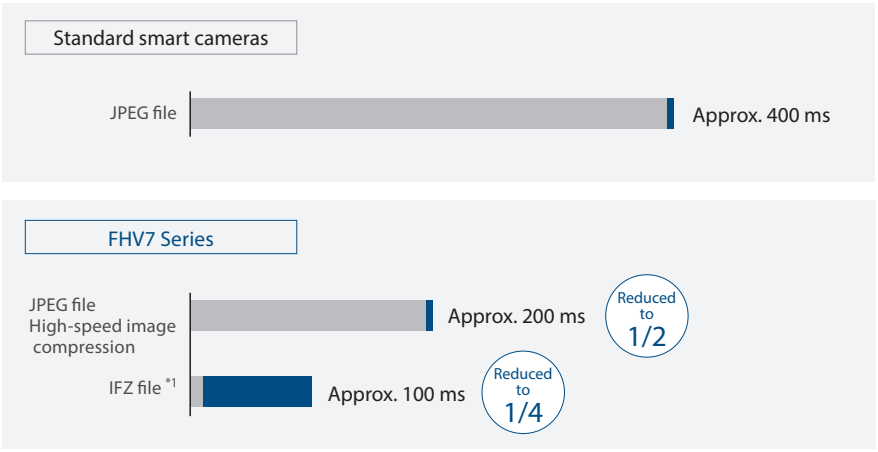

Compression time
Storage time

The times in the figure on the left are provided for reference only and their accuracy cannot be guaranteed. They are measured under the following conditions:
- FHV7H-M050 Smart Camera
- 5 Mpix monochrome images
- Size of converted JPEG file: 0.1 MB
- Ethernet

*1. Omron's own image file format

Images are saved even during measurements

Distributed processing across 2 cores allows the CPU to perform parallel processing of measurements and image logging. With connection to a high-speed, large-capacity NAS, all images on the high-speed line can be saved, which was previously difficult. *2
Trend analysis of all saved images quickly isolates errors and facilitates countermeasures.

*2. All images can be saved under the following conditions:
- One 0.4 Mpix camera
- Measurement time of 30 ms
- JPEG file
- Images can be saved continuously for approx. 380 days when a 3 TB NAS is used (based on 8 hours of operation a day)

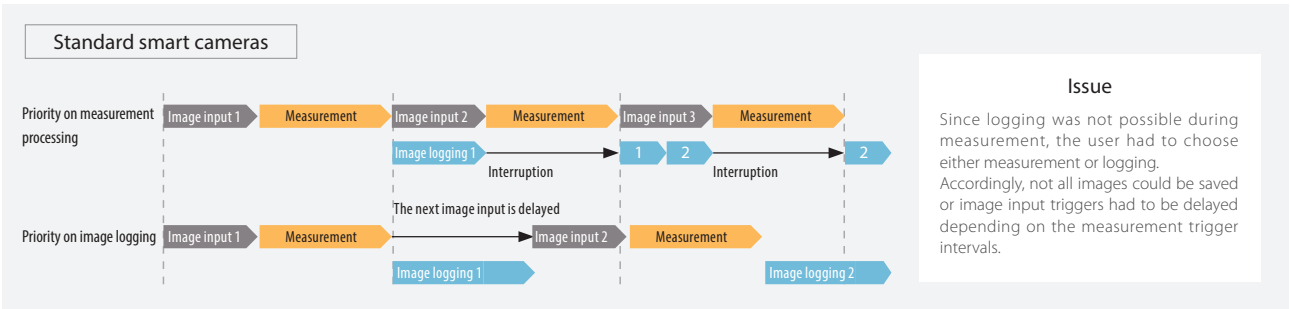

Issue

Since logging was not possible during measurement, the user had to choose either measurement or logging.
Accordingly, not all images could be saved or image input triggers had to be delayed depending on the measurement trigger intervals.

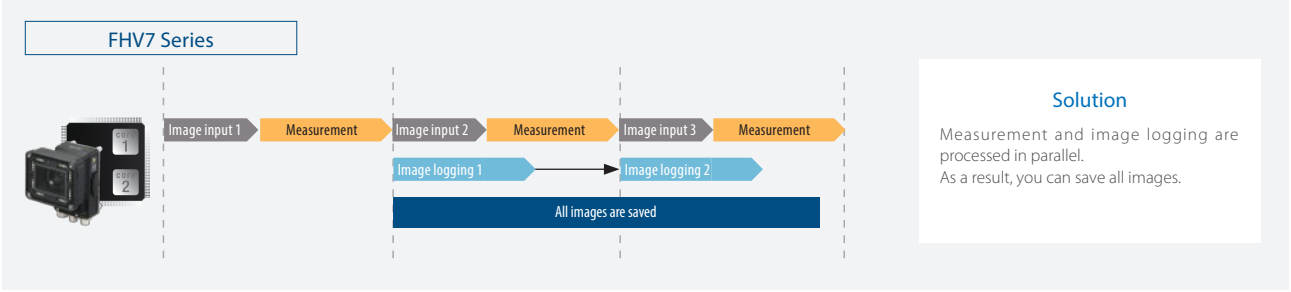

Solution

Measurement and image logging are processed in parallel.
As a result, you can save all images.

Application Examples

Pick and place

The FHV7 Smart Camera can be combined with robots for picking and assembling applications.

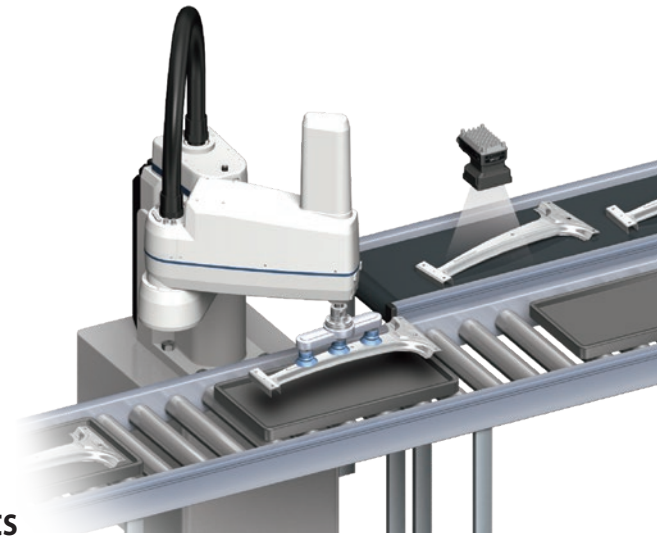

Shape Search III stably detects all types of objects

Stable position detection is performed regardless of shape, material, or background.

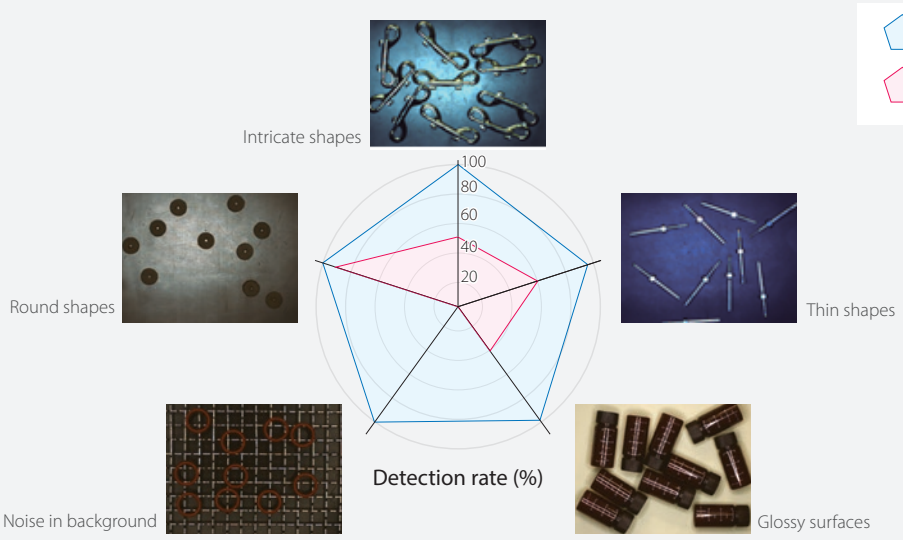

Sorting mixed models

Different types of the searched objects can be sorted.

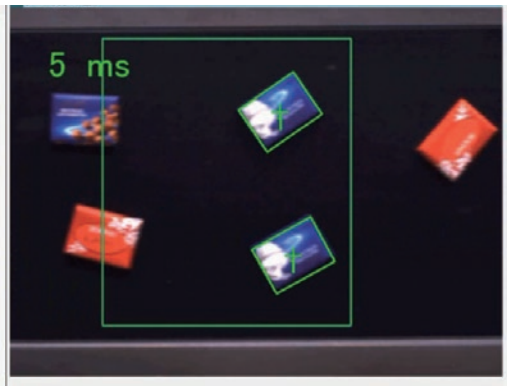

Think & See, the core technology of Shape Search III

"Think & See" is Omron's powerful core technology for image sensing. Omron is continuously developing technologies to measure, detect, or identify the positions, orientations, shapes, materials, colors, status, or attributes of things, people, vehicles, or other objects faster, more precisely, and more easily than the human eye under various conditions.

See the details of Think & See.
https://www.fa.omron.co.jp/tse

Easy output to major robot manufacturers' devices

The dialog boxes for the FHV7 Smart Camera and the programs for various vendors' robots greatly reduce the set-up time for robot applications. Refer to the system configuration diagram (P. 21) for connection details.

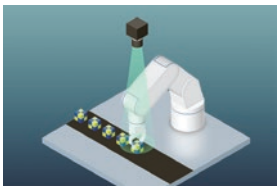

Pick

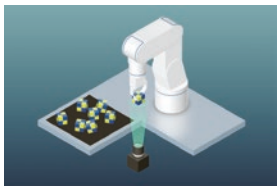

Offset compensation

Place

3-step easy setting

Verified robot communication programs and flowcharts required for robot applications are provided. You don't need to design communications and create a flowchart to set up a robot application.

STEP 1

Obtain robot program and flowchart

Just a few clicks in Robot Setting Tool

Select 3 items to obtain the communication program and flowchart you need.

You can download the Robot Setting Tool from the following URL:
http://www.ia.omron.com/fhv

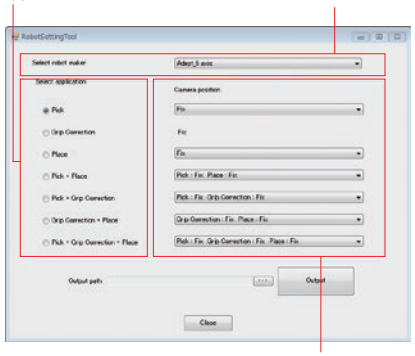

STEP 2

Calibrate

Move robot for calibration from the FHV7 Series

The obtained flowchart can be used to move the robot for calibration from the FHV7 Smart Camera. There is no need to create a program for robot calibration.

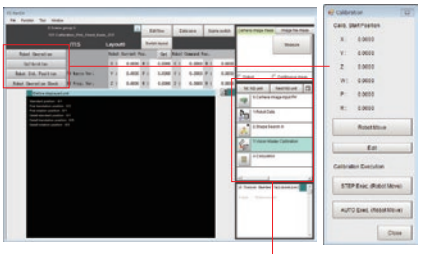

STEP 3

Check operations

Set up and check application from the FHV7 Series

Set the coordinates of the robot and check robot operations using the dialog boxes.

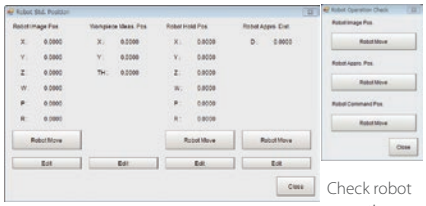

Application Examples

Flexible multipoint inspection using robots

The FHV7 Smart Camera can be installed on robot arms to inspect objects from multiple directions.

Vision inspection suited to each location

The FHV7 Smart Camera, which is moved to each inspection point, adjusts field of view, precision, and focus to match the location.
External inspection by the human eye can be replaced with automated inspection using robots.

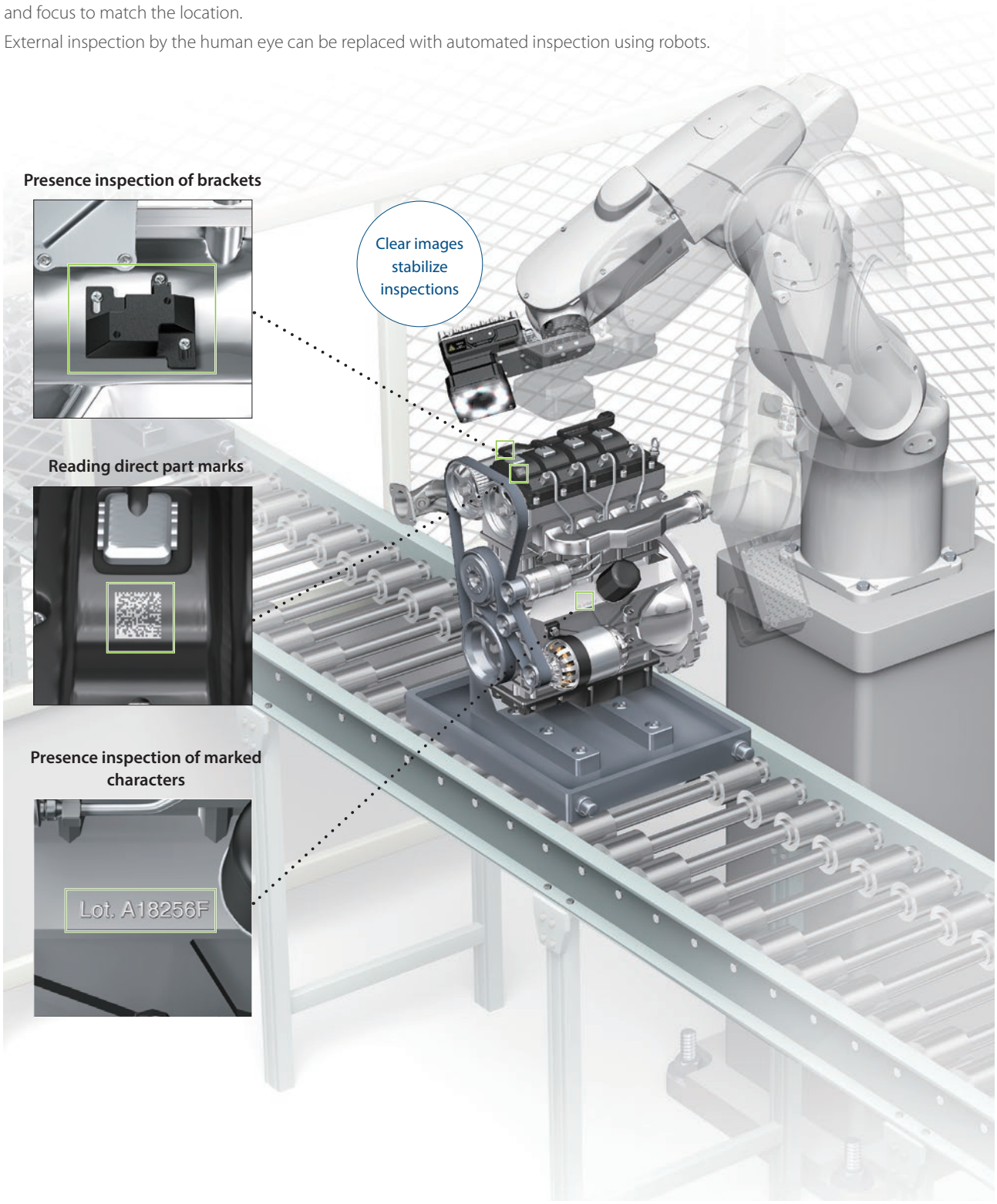

Ultra-high-speed, long-life lens module NEW PATENT PENDING *1

New high-speed lens modules using a liquid lens have been added to the lineup. Advanced control of the liquid lens enables the lens to focus about 10 times faster than a mechanical focus lens, allowing settings to be changed during movement of the robot arm.*2 General mechanical focus mechanisms break due to deterioration of the drive mechanism or motor when they perform autofocus tens of thousands of times. The liquid lens provides unlimited autofocus and long life.

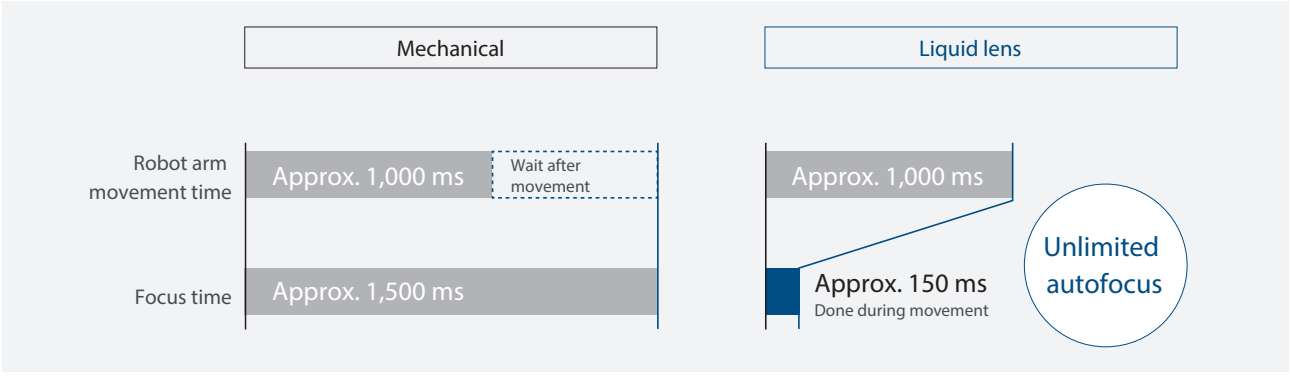

Note: The above times are when the focus value is changed from minimum to maximum. These times are provided for reference only and are not guaranteed.
*1. "Patent pending" means that we applied for a patent in Japan, and "Patented" means that we obtained a patent in Japan. (As of April 2019)
*2. Set focuses for different product heights in advance and switch between them.

Much less maintenance

Super-flexible cable NEW

The new cable offers approximately 10 times the bending resistance of conventional FHV7 flexible cables. High bending resistance significantly reduces the frequency of replacing the cables on robot arms.

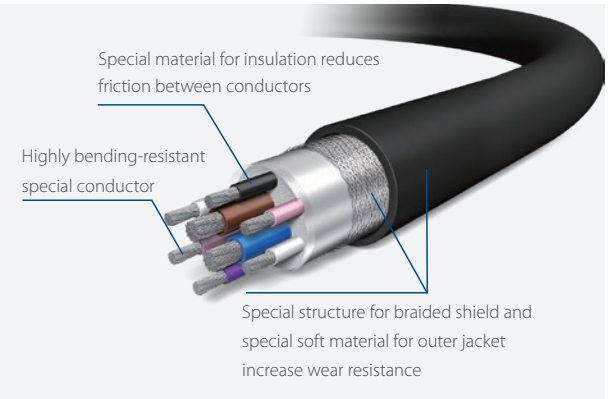

Reduces halation from metallic or glossy surfaces NEW

The High Dynamic Range (HDR) function minimizes the influence of changes in lighting conditions and light reflection. This enables stable inspections even for materials that are difficult to light evenly, such as metal parts or glossy films, or in locations subject to external light interference.

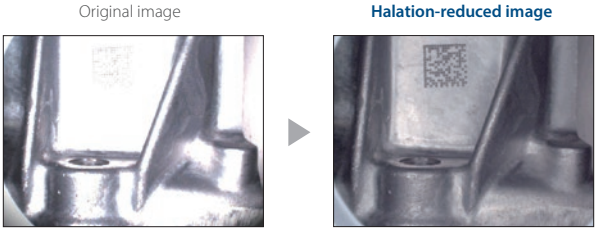

Halation

Stable detection for metallic surfaces subject to gloss and inconsistent lighting

Filtering to emphasize difficult-to-find defects

Image input & filtering **18 processing items**

Stripe Removal Filter II

The stripped pattern is filtered out so that only required aspects are shown clearly. Vertical, horizontal, and diagonal stripes can be removed.

Unfiltered image | **Filtered image**

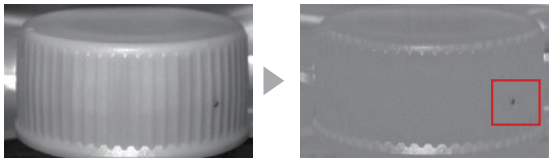

Anti Color Shading PATENTED *

Specific shades that hide defects are removed so that tiny scratches and dirt can be precisely detected. This advanced filtering was achieved through the Real Color Sensing technology.

Unfiltered image | **Filtered image**

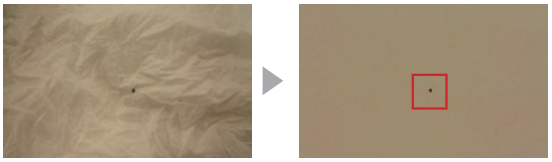

Even Emphasis Unevenness

This filter removes background pattern and enhances low-contrast unevenness.

Unfiltered image | **Filtered image**

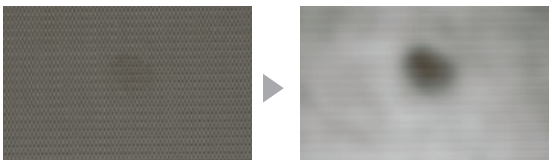

Emphasis Line Defect/Emphasis Circle Defect

These filters enhance defects in high background noise or scratches on embossed surfaces.

Unfiltered image | **Filtered image**

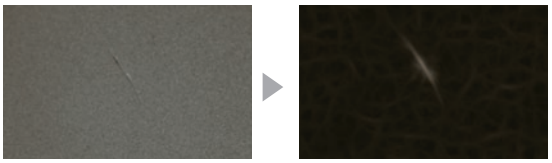

Brightness Correct Filter

This filter cuts out uneven lighting and changes in brightness caused by workpiece surface irregularities to make characteristic features stand out clearly.

Unfiltered image | **Filtered image**

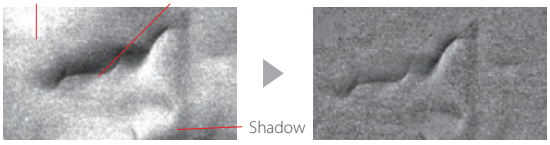

The wavy inconsistencies are judged as defects.

Uneven areas are removed so that only the defect appears in the inspection.

Custom Filter

You can set the mask coefficients as required for these filters. The mask size can be up to 21 x 21. You can flexibly set smoothing, edge extraction, dilation, and erosion for the image.

Unfiltered image | **After dilation in one direction**

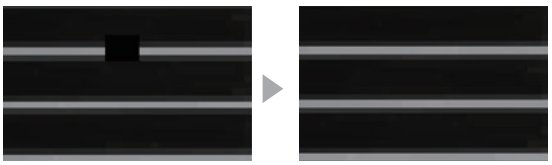

Real Color Sensing PATENTED *

Real-color processing is an image processing technology that performs high-speed processing of full-color images with a total of 16.7 million colors (256 tones per RGB channel). This means that image processing can be performed with the same color information that is visible to the human eye, and stable measurements can be performed under lighting that closely resembles natural light.

Real Color Sensing

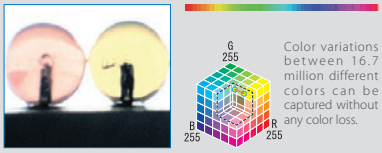

Color variations between 16.7 million different colors can be captured without any color loss.

The camera image is processed as-is without any loss of quality. This enables even the slightest of color differences to be captured with high accuracy.

Color image processing

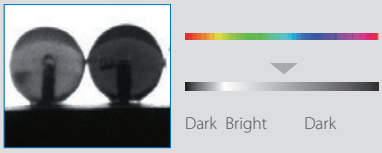

Captured images are converted to a 256-shade monochrome image and processed. This enables more stable inspection compared to binary level processing, but slight changes in color cannot be detected with this method.

Color segmentation processing

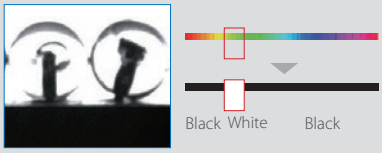

Captured images are converted to a black and white two-color image and processed. This reduces the amount of data and enables high-speed processing.

* "Patent pending" means that we applied for a patent in Japan, and "Patented" means that we obtained a patent in Japan. (As of April 2019)

Processing items for various types of inspections

Inspection & measurement **27 processing items**

Precise Defect

Detection of dirt on paper cups

This processing item is used to detect scratches and dirt on paper cups and molded plastics, as well as oil stains on metal surfaces. Real Color Sensing makes it possible to detect dirt in various colors.

Search II

NEW 2 times faster and higher detection*

Cable arrangement inspection

Just register a model, and the cable arrangement inspection is completed in one go. Repeating color detection is not necessary.

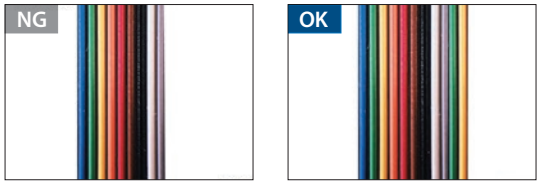

* Compared with Search under our test conditions in April 2019.

Scan Edge Position and Scan Edge Width

Inspection of groove depth of metal shafts

The maximum and minimum widths within the region are measured simultaneously. This processing item is very useful especially for the measurement of groove depths of metal shafts.

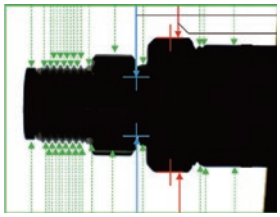

Fine Matching

Inspection for label rips

The registered reference image is compared against the input image and tiny differences are detected at high speed. Scratches on the intricate patterns and unexpected dirt in the color are precisely detected.

Inspection image **Difference image**

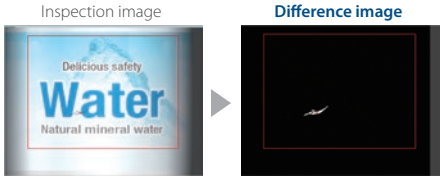

Labeling

Hole counting

The number of labels with the specified color and size is counted. Also, the area and center of gravity of the specified labels are measured.

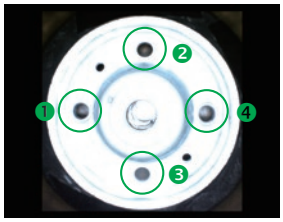

Glue Bead Inspection

Path and width inspection

Just define the start and end points of the object to evaluate sealing numerically. This minimizes inconsistencies in inspection. This method enables accurate inspection of complex curves and interruptions.

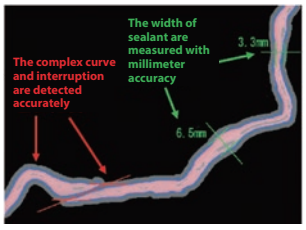

Character Inspection

Label printing inspection

Characters are recognized by pattern search, and this enables special fonts and non-alphanumeric characters to be inspected. Automatically extracting a model and selecting an index from the list help you easily set up your dictionary. Using the user dictionary, the Character Inspection performs pattern search to recognize characters.

Auto model extraction
(Special fonts can be read)

Index selection from list

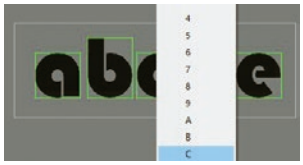

Easy-to-use system with high functionality

Easy measurement flow creation

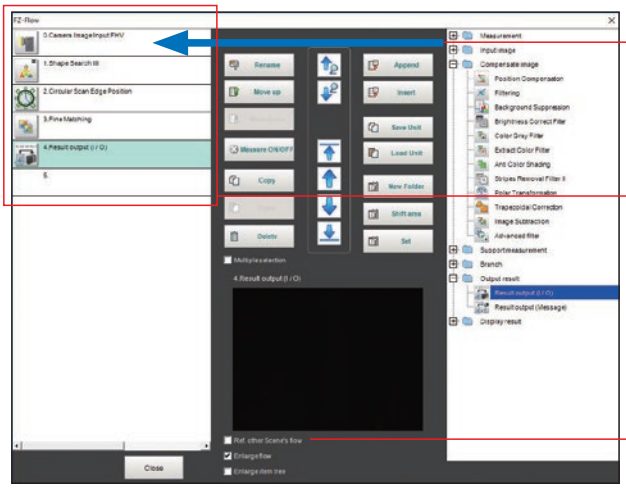

Drag and drop

Just drag and drop pre-installed processing items from the processing item list to the flowchart to build a measurement flow.

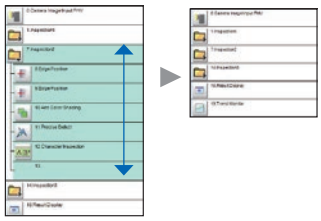

Complex and long processes can be grouped into folders.

Copy & paste processing items from other scenes

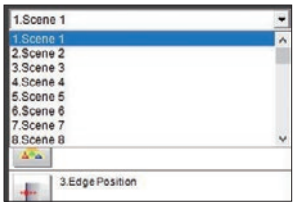

You can set up a new flow menu by combining different processing items copied from other scenes. When reusing the setting of other scenes, you don't need to make adjustments.

Simple setting with menus

Total Design Management Editor

The design interface allows you to design complex measurement processes while managing variables. This simple GUI manages complicated branching processes and data sharing across measurement scenes and eliminates the need to switch screens.

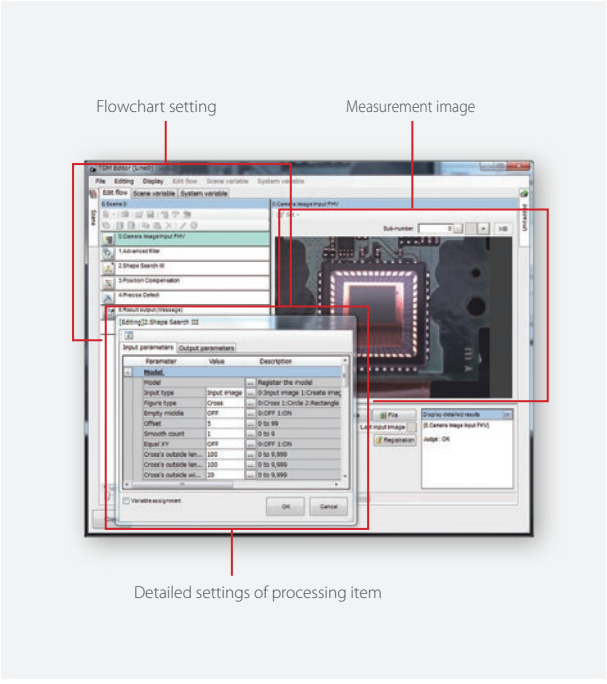

Setting and operating from a computer

Use a dedicated software to create measurement flows and measurement conditions. The software can also be used for remote monitoring and control via a network.
You can download the software for free after purchasing the product and signing up online. For details, see the member registration sheet attached to the FHV7 Smart Camera.

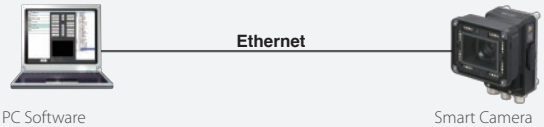

Operation via touch panel monitor NEW

The Advantech-made touch panel monitor with pre-installed software for the FHV7 Smart Camera can be used as an easy-to-install operator interface.

Touch Panel Monitor
(Advantech)
PPC-3100S-OMR

Ask Advantech about the warranty period and coverage of this product.
https://www.advantech.com/contact/offices/

Customizable user interface prevents incorrect operation

The processing item setting window includes parameters for initial setting and for daily adjustments. To prevent incorrect operation, you can customize the adjustment window to show only parameters that are required for your daily operation.

Example 1: Show only necessary parameters

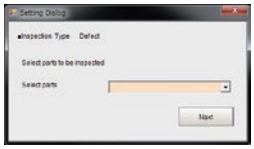

Example 2: Show a wizard

Easy setting Just select objects from the list in the dialog box and place them. No programming is required.

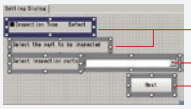

Label:
Any character string can be displayed in any desired position

Drop-down list: Options can be set

Button:
Operation that is performed when the button is pressed can be set

Easy machine control design NEW

Connecting Sysmac devices via EtherCAT and using the integrated development environment Sysmac Studio allow you to design machine operation as you want.

One Connection

From position detection to positioning, high-speed data transmission via EtherCAT® enables smooth and flexible control.

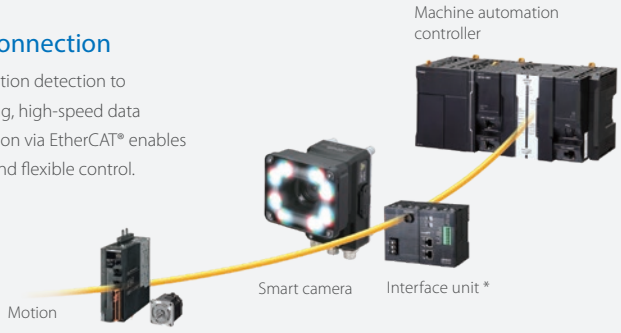

One Software

Programming devices on EtherCAT from the integrated interface reduces setup times.

Easy connection to field networks

EtherCAT *, EtherNet/IP, PROFINET

The FHV7 Smart Camera includes communication interfaces for compatibility with a wide range of network protocols used at production sites. This helps reduce the design work required for data communications between the camera and a PLC.

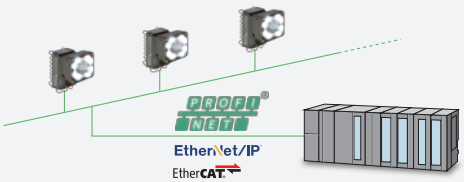

Easy setting of output items

Just select variables to output measurement results.

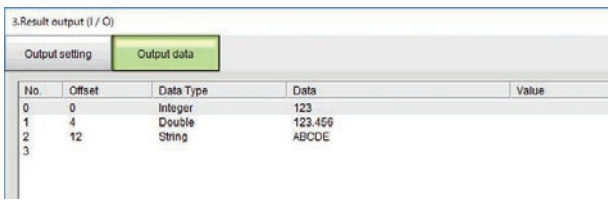

* The FHV-SDU30 EtherCAT Interface is required for EtherCAT connection.

Product lineup

The product lineup includes general-use Smart Cameras and high-speed, high-accuracy vision systems. You can choose the right one according to your requirements for speed and accuracy of each process. Both FH Series and FHV7 Series have the common user interface and operating procedures, so it is possible to share the same image inspection method across the production line. This reduces the time for operator training. The compatibility of setting data enables you to upgrade hardware easily when speed and accuracy enhancement is needed.

		For various types of inspections			For processes requiring high speed and high resolution		
		Smart Camera FHV7 Series			Vision System FH Series		
		FHV7H			FH-2050	FH-5050	
Hardware Grade	Performance *1	★			★★	★★★	
	No. of cameras	1			8	8	
	Resolution	0.4 Mpix	1.6 Mpix	3.2 Mpix	0.4 Mpix	2 Mpix	4 Mpix
		5 Mpix	6.3 Mpix	12 Mpix	5 Mpix	12 Mpix	20.4 Mpix
One Software	Screens	Main screen	Measurement flow setting screen	Measurement condition setting screen			
		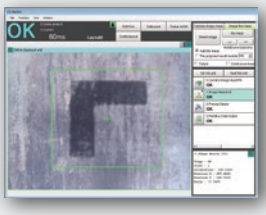		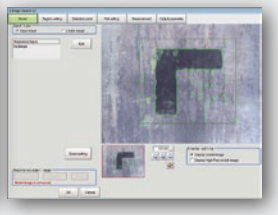			
	Image logging format	JPEG	BMP	IFZ (Omron format)			
	Setting data	Compatible *2					

*1. ★: The more starts, the higher the performance.
*2. Settings for the common functions can be shared between series.

Smart Camera

FHV7 Series

Ultimate flexibility to fit ever-changing production scene

- Modular structure for a wide range of applications
- Responding to changes of objects like human eyes
- Raising quality standard without sacrificing cycle time

System Configuration

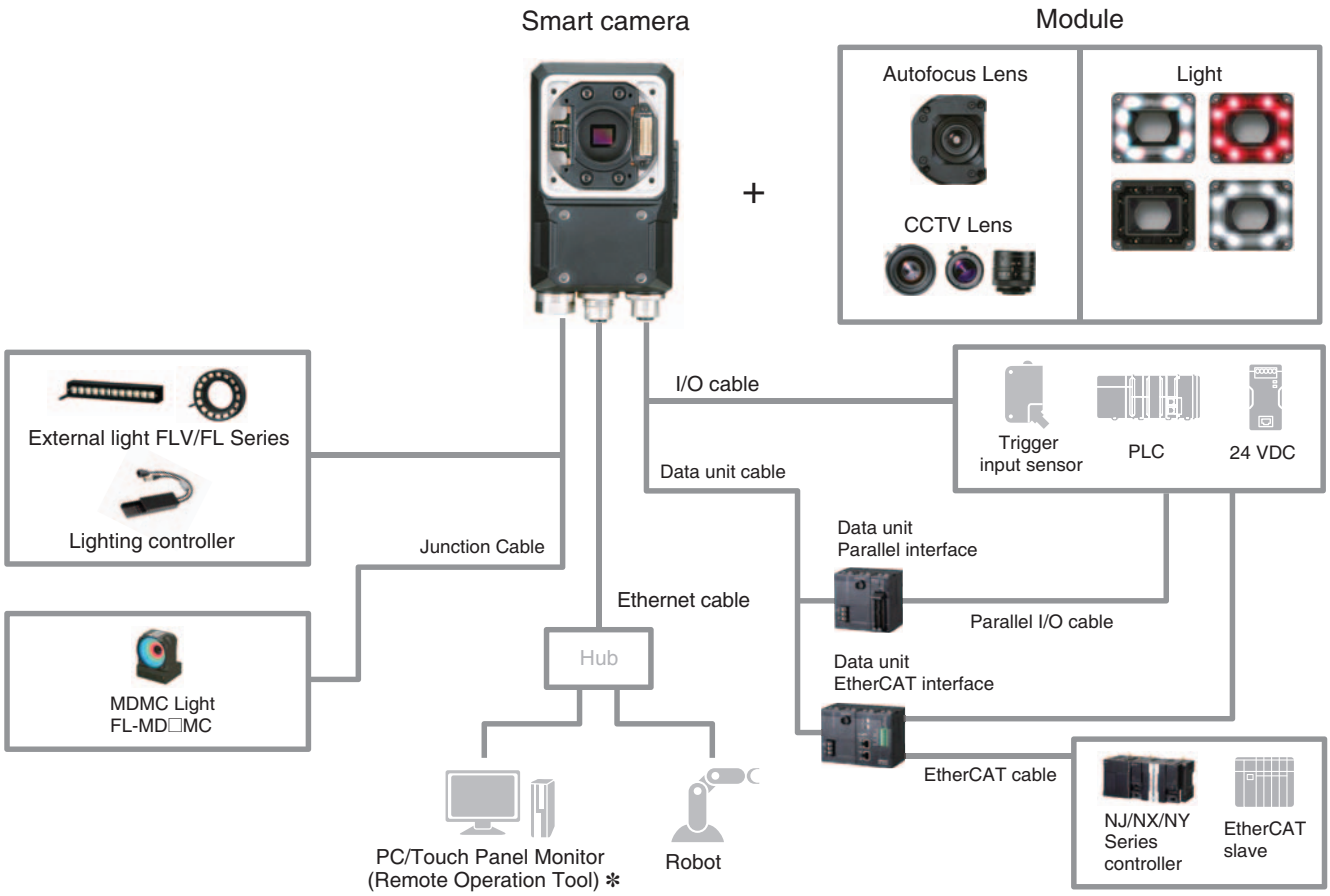

✻ After purchasing the product, you can register as a member to download this for free. For details, see the member registration sheet included with the FHV7 Smart Camera.

Model Selection

To select a model of Smart Camera, use the WEB Selector.
http://www.ia.omron.com/fhv_select_e

Note: With certain module types, the operation of some combinations cannot be guaranteed. Use the Web Selector to select the correct combination of image sensor, lens, resolution, and light.

Model Number Structure

FHV7 Series Model Number Legend

Use this legend when determining the product specifications from the model number. When ordering, use a model number from the table in *Ordering Information*.

FHV7H-□□□□□-□□□-□□

1 2 3 4 5 6

No.	Classification	Code	Meaning
1	Image sensors	M	Monochrome
		C	Color
2	Resolution	004	0.4 million pixels
		016	1.6 million pixels
		032	3.2 million pixels
		050	5 million pixels
		063	6.3 million pixels
		120	12 million pixels
3	Shutter type	-	Global shutter
		R	Rolling shutter
4	Lens	C	C mount
		H	High-speed lens module (autofocus)
		S	Standard lens module (autofocus)

No.	Classification	Code	Meaning
5	Focal length	06	6 mm
		09	9 mm
		12	12 mm
		16	16 mm
		19	19 mm
		25	25 mm
6	Light color	R	Red
		W	White
		IR	IR
		MC	Multi color

Configuration

For the Smart Camera FHV7 series, there are five configurations below by module combinations.

Smart camera		Lens	Internal lighting	Protective structure	Integrated model	Appearance	Configuration
0.4 million pixels 1.6 million pixels 3.2 million pixels 5 million pixels 6.3 million pixels 12 million pixels	FHV7H-□004-□ FHV7H-□016-□ FHV7H-□032-□ FHV7H-□050-□ FHV7H-□063R-□ FHV7H-□120R-□	C mount lens 3Z4SLE SV-□□□□V 3Z4SLE SV-□□□□H	N/A	IP40	FHV7H-□□□□□-C		C mount lens/IP40
				IP67 Waterproof Hoods required FHV-XHD-S FHV-XHD-L	N/A		C mount lens/IP67
0.4 million pixels 1.6 million pixels 3.2 million pixels 6.3 million pixels	FHV7H-□004-□ FHV7H-□016-□ FHV7H-□032-□ FHV7H-□063R-□	FHV lens module FHV-LEM-H□□ FHV-LEM-S□□	N/A	IP40	FHV7H-□□□□□-H□□ FHV7H-□□□□□-S□□		Lens module/IP40
				IP67 Waterproof Hoods required FHV-XHD-LEM	N/A		Lens module/IP67
			FHV-LTM-□□	IP67	FHV7H-□□□□□-H□□-□□ FHV7H-□□□□□-S□□-□□		Lens module /Internal lighing - IP67

Ordering Information

Smart Cameras

C Mount Models

Item	Resolution	Model	
		Color	Monochrome
	0.4 million pixels	**FHV7H-C004-C**	**FHV7H-M004-C**
	1.6 million pixels	**FHV7H-C016-C**	**FHV7H-M016-C**
	3.2 million pixels	**FHV7H-C032-C**	**FHV7H-M032-C**
	5 million pixels	**FHV7H-C050-C**	**FHV7H-M050-C**
	6.3 million pixels	**FHV7H-C063R-C**	**FHV7H-M063R-C**
	12 million pixels	**FHV7H-C120R-C**	**FHV7H-M120R-C**

Lens Modules

Item		Focal length	Model
	High-speed lens module (Autofocus)	6 mm	**FHV-LEM-H06**
		19 mm	**FHV-LEM-H19**
	Standard lens module (Autofocus)	6 mm	**FHV-LEM-S06**
		9 mm	**FHV-LEM-S09**
		12 mm	**FHV-LEM-S12**
		16 mm	**FHV-LEM-S16**
		25 mm	**FHV-LEM-S25**

✻ For the focal length and horizontal field of view, refer to specifications (P.33) and optical charts of the lens module (P.50).

Note: Refer to the *Vision Accessory Catalog* (Cat No. Q198) for details on C-mount lenses.

Lighting Modules

Item	Light color	Model
	Multi color	**FHV-LTM-MC**
	Red	**FHV-LTM-R**
	White	**FHV-LTM-W**
	IR	**FHV-LTM-IR**

All-in-one Models with Lens Module

Item	Resolution	Lens	Focal length	Model	
				Color	Monochrome
	0.4 million pixels	High-speed lens module (autofocus)	6 mm	**FHV7H-C004-H06**	**FHV7H-M004-H06**
			19 mm	**FHV7H-C004-H19**	**FHV7H-M004-H19**
		Standard lens module (autofocus)	6 mm	**FHV7H-C004-S06**	**FHV7H-M004-S06**
			9 mm	**FHV7H-C004-S09**	**FHV7H-M004-S09**
			12 mm	**FHV7H-C004-S12**	**FHV7H-M004-S12**
			16 mm	**FHV7H-C004-S16**	**FHV7H-M004-S16**
			25 mm	**FHV7H-C004-S25**	**FHV7H-M004-S25**
	1.6 million pixels	High-speed lens module (autofocus)	6 mm	**FHV7H-C016-H06**	**FHV7H-M016-H06**
			19 mm	**FHV7H-C016-H19**	**FHV7H-M016-H19**
		Standard lens module (autofocus)	6 mm	**FHV7H-C016-S06**	**FHV7H-M016-S06**
			9 mm	**FHV7H-C016-S09**	**FHV7H-M016-S09**
			12 mm	**FHV7H-C016-S12**	**FHV7H-M016-S12**
			16 mm	**FHV7H-C016-S16**	**FHV7H-M016-S16**
			25 mm	**FHV7H-C016-S25**	**FHV7H-M016-S25**
	3.2 million pixels	High-speed lens module (autofocus)	6 mm	**FHV7H-C032-H06**	**FHV7H-M032-H06**
			19 mm	**FHV7H-C032-H19**	**FHV7H-M032-H19**
		Standard lens module (autofocus)	6 mm	**FHV7H-C032-S06**	**FHV7H-M032-S06**
			9 mm	**FHV7H-C032-S09**	**FHV7H-M032-S09**
			12 mm	**FHV7H-C032-S12**	**FHV7H-M032-S12**
			16 mm	**FHV7H-C032-S16**	**FHV7H-M032-S16**
			25 mm	**FHV7H-C032-S25**	**FHV7H-M032-S25**
	6.3 million pixels	High-speed lens module (autofocus)	6 mm	**FHV7H-C063R-H06**	**FHV7H-M063R-H06**
			19 mm	**FHV7H-C063R-H19**	**FHV7H-M063R-H19**
		Standard lens module (autofocus)	6 mm	**FHV7H-C063R-S06**	**FHV7H-M063R-S06**
			9 mm	**FHV7H-C063R-S09**	**FHV7H-M063R-S09**
			12 mm	**FHV7H-C063R-S12**	**FHV7H-M063R-S12**
			16 mm	**FHV7H-C063R-S16**	**FHV7H-M063R-S16**
			25 mm	**FHV7H-C063R-S25**	**FHV7H-M063R-S25**

✻ For the focal length and horizontal field of view, refer to specifications (P.33) and optical charts of the lens module (P.50).

All-in-one Models with Lens and Lighting Modules

Item	Resolution	Lens	Focal length	Light color	Model	
					Color	Monochrome
	0.4 million pixels	High-speed lens module (autofocus)	6 mm	Multi color	**FHV7H-C004-H06-MC**	**FHV7H-M004-H06-MC**
				Red	---	**FHV7H-M004-H06-R**
				White	**FHV7H-C004-H06-W**	**FHV7H-M004-H06-W**
				IR	---	**FHV7H-M004-H06-IR**
			19 mm	Multi color	**FHV7H-C004-H19-MC**	**FHV7H-M004-H19-MC**
				Red	---	**FHV7H-M004-H19-R**
				White	**FHV7H-C004-H19-W**	**FHV7H-M004-H19-W**
				IR	---	**FHV7H-M004-H19-IR**
		Standard lens module (autofocus)	6 mm	Multi color	**FHV7H-C004-S06-MC**	**FHV7H-M004-S06-MC**
				Red	---	**FHV7H-M004-S06-R**
				White	**FHV7H-C004-S06-W**	**FHV7H-M004-S06-W**
				IR	---	**FHV7H-M004-S06-IR**
			9 mm	Multi color	**FHV7H-C004-S09-MC**	**FHV7H-M004-S09-MC**
				Red	---	**FHV7H-M004-S09-R**
				White	**FHV7H-C004-S09-W**	**FHV7H-M004-S09-W**
				IR	---	**FHV7H-M004-S09-IR**
			12 mm	Multi color	**FHV7H-C004-S12-MC**	**FHV7H-M004-S12-MC**
				Red	---	**FHV7H-M004-S12-R**
				White	**FHV7H-C004-S12-W**	**FHV7H-M004-S12-W**
				IR	---	**FHV7H-M004-S12-IR**
			16 mm	Multi color	**FHV7H-C004-S16-MC**	**FHV7H-M004-S16-MC**
				Red	---	**FHV7H-M004-S16-R**
				White	**FHV7H-C004-S16-W**	**FHV7H-M004-S16-W**
				IR	---	**FHV7H-M004-S16-IR**
			25 mm	Multi color	**FHV7H-C004-S25-MC**	**FHV7H-M004-S25-MC**
				Red	---	**FHV7H-M004-S25-R**
				White	**FHV7H-C004-S25-W**	**FHV7H-M004-S25-W**
				IR	---	**FHV7H-M004-S25-IR**
	1.6 million pixels	High-speed lens module (autofocus)	6 mm	Multi color	**FHV7H-C016-H06-MC**	**FHV7H-M016-H06-MC**
				Red	---	**FHV7H-M016-H06-R**
				White	**FHV7H-C016-H06-W**	**FHV7H-M016-H06-W**
				IR	---	**FHV7H-M016-H06-IR**
			19 mm	Multi color	**FHV7H-C016-H19-MC**	**FHV7H-M016-H19-MC**
				Red	---	**FHV7H-M016-H19-R**
				White	**FHV7H-C016-H19-W**	**FHV7H-M016-H19-W**
				IR	---	**FHV7H-M016-H19-IR**
		Standard lens module (autofocus)	6 mm	Multi color	**FHV7H-C016-S06-MC**	**FHV7H-M016-S06-MC**
				Red	---	**FHV7H-M016-S06-R**
				White	**FHV7H-C016-S06-W**	**FHV7H-M016-S06-W**
				IR	---	**FHV7H-M016-S06-IR**
			9 mm	Multi color	**FHV7H-C016-S09-MC**	**FHV7H-M016-S09-MC**
				Red	---	**FHV7H-M016-S09-R**
				White	**FHV7H-C016-S09-W**	**FHV7H-M016-S09-W**
				IR	---	**FHV7H-M016-S09-IR**
			12 mm	Multi color	**FHV7H-C016-S12-MC**	**FHV7H-M016-S12-MC**
				Red	---	**FHV7H-M016-S12-R**
				White	**FHV7H-C016-S12-W**	**FHV7H-M016-S12-W**
				IR	---	**FHV7H-M016-S12-IR**
			16 mm	Multi color	**FHV7H-C016-S16-MC**	**FHV7H-M016-S16-MC**
				Red	---	**FHV7H-M016-S16-R**
				White	**FHV7H-C016-S16-W**	**FHV7H-M016-S16-W**
				IR	---	**FHV7H-M016-S16-IR**
			25 mm	Multi color	**FHV7H-C016-S25-MC**	**FHV7H-M016-S25-MC**
				Red	---	**FHV7H-M016-S25-R**
				White	**FHV7H-C016-S25-W**	**FHV7H-M016-S25-W**
				IR	---	**FHV7H-M016-S25-IR**

Item	Resolution	Lens	Focal length	Light color	Model	
					Color	Monochrome
	3.2 million pixels	High-speed lens module (autofocus)	6 mm	Multi color	**FHV7H-C032-H06-MC**	**FHV7H-M032-H06-MC**
				Red	---	**FHV7H-M032-H06-R**
				White	**FHV7H-C032-H06-W**	**FHV7H-M032-H06-W**
				IR	---	**FHV7H-M032-H06-IR**
			19 mm	Multi color	**FHV7H-C032-H19-MC**	**FHV7H-M032-H19-MC**
				Red	---	**FHV7H-M032-H19-R**
				White	**FHV7H-C032-H19-W**	**FHV7H-M032-H19-W**
				IR	---	**FHV7H-M032-H19-IR**
		Standard lens module (autofocus)	6 mm	Multi color	**FHV7H-C032-S06-MC**	**FHV7H-M032-S06-MC**
				Red	---	**FHV7H-M032-S06-R**
				White	**FHV7H-C032-S06-W**	**FHV7H-M032-S06-W**
				IR	---	**FHV7H-M032-S06-IR**
			9 mm	Multi color	**FHV7H-C032-S09-MC**	**FHV7H-M032-S09-MC**
				Red	---	**FHV7H-M032-S09-R**
				White	**FHV7H-C032-S09-W**	**FHV7H-M032-S09-W**
				IR	---	**FHV7H-M032-S09-IR**
			12 mm	Multi color	**FHV7H-C032-S12-MC**	**FHV7H-M032-S12-MC**
				Red	---	**FHV7H-M032-S12-R**
				White	**FHV7H-C032-S12-W**	**FHV7H-M032-S12-W**
				IR	---	**FHV7H-M032-S12-IR**
			16 mm	Multi color	**FHV7H-C032-S16-MC**	**FHV7H-M032-S16-MC**
				Red	---	**FHV7H-M032-S16-R**
				White	**FHV7H-C032-S16-W**	**FHV7H-M032-S16-W**
				IR	---	**FHV7H-M032-S16-IR**
			25 mm	Multi color	**FHV7H-C032-S25-MC**	**FHV7H-M032-S25-MC**
				Red	---	**FHV7H-M032-S25-R**
				White	**FHV7H-C032-S25-W**	**FHV7H-M032-S25-W**
				IR	---	**FHV7H-M032-S25-IR**
	6.3 million pixels	High-speed lens module (autofocus)	6 mm	Multi color	**FHV7H-C063R-H06-MC**	**FHV7H-M063R-H06-MC**
				Red	---	**FHV7H-M063R-H06-R**
				White	**FHV7H-C063R-H06-W**	**FHV7H-M063R-H06-W**
				IR	---	**FHV7H-M063R-H06-IR**
			19 mm	Multi color	**FHV7H-C063R-H19-MC**	**FHV7H-M063R-H19-MC**
				Red	---	**FHV7H-M063R-H19-R**
				White	**FHV7H-C063R-H19-W**	**FHV7H-M063R-H19-W**
				IR	---	**FHV7H-M063R-H19-IR**
		Standard lens module (autofocus)	6 mm	Multi color	**FHV7H-C063R-S06-MC**	**FHV7H-M063R-S06-MC**
				Red	---	**FHV7H-M063R-S06-R**
				White	**FHV7H-C063R-S06-W**	**FHV7H-M063R-S06-W**
				IR	---	**FHV7H-M063R-S06-IR**
			9 mm	Multi color	**FHV7H-C063R-S09-MC**	**FHV7H-M063R-S09-MC**
				Red	---	**FHV7H-M063R-S09-R**
				White	**FHV7H-C063R-S09-W**	**FHV7H-M063R-S09-W**
				IR	---	**FHV7H-M063R-S09-IR**
			12 mm	Multi color	**FHV7H-C063R-S12-MC**	**FHV7H-M063R-S12-MC**
				Red	---	**FHV7H-M063R-S12-R**
				White	**FHV7H-C063R-S12-W**	**FHV7H-M063R-S12-W**
				IR	---	**FHV7H-M063R-S12-IR**
			16 mm	Multi color	**FHV7H-C063R-S16-MC**	**FHV7H-M063R-S16-MC**
				Red	---	**FHV7H-M063R-S16-R**
				White	**FHV7H-C063R-S16-W**	**FHV7H-M063R-S16-W**
				IR	---	**FHV7H-M063R-S16-IR**
			25 mm	Multi color	**FHV7H-C063R-S25-MC**	**FHV7H-M063R-S25-MC**
				Red	---	**FHV7H-M063R-S25-R**
				White	**FHV7H-C063R-S25-W**	**FHV7H-M063R-S25-W**
				IR	---	**FHV7H-M063R-S25-IR**

✻ For the focal length and horizontal field of view, refer to specifications (P.33) and optical charts of the lens module (P.50)

Optical Filters

tem			Model
	Polarization Filter	For visible light	**FHV-XPL**
	Polarization Filter	For both infrared light and visible light	**FHV-XPL-IR**
	Diffusion Filter		**FHV-XDF**

Waterproof Hoods

Required to ensure IP67 protection without using a lighting module.

Item		Model
	Waterproof Hood for Lens Modules	**FHV-XHD-LEM**
	Waterproof Hood for C-mount Lens (Short) ✻1	**FHV-XHD-S**
	Waterproof Hood for C-mount Lens (Long) ✻2	**FHV-XHD-L**

✻1. Can be used with the following lenses.
3Z4S-LE SV-0614V, 3Z4S-LE SV-0813V, 3Z4S-LE SV-1214V, 3Z4S-LE SV-1614V, 3Z4S-LE SV-2514V
✻2. Can be used with the following lenses.
3Z4S-LE SV-0614H, 3Z4S-LE SV-0814H, 3Z4S-LE SV-1214H, 3Z4S-LE SV-1614H,
3Z4S-LE SV-2514H, 3Z4S-LE SV-3514H, 3Z4S-LE SV-5014H

Cables

Item		Cable length	Model
	I/O Cable (Bend Resistant) ✻1	2m	**FHV-VDB 2M**
		3m	**FHV-VDB 3M**
		5m	**FHV-VDB 5M**
		10m	**FHV-VDB 10M**
		20m	**FHV-VDB 20M**
	I/O Cable (Bend Resistant, Right-angle) ✻1	2m	**FHV-VDLB 2M**
		3m	**FHV-VDLB 3M**
		5m	**FHV-VDLB 5M**
		10m	**FHV-VDLB 10M**
		20m	**FHV-VDLB 20M**
	I/O Cable (Super Bend Resistant) ✻1, ✻2	2m	**FHV-VDBX 2M**
		3m	**FHV-VDBX 3M**
		5m	**FHV-VDBX 5M**
		10m	**FHV-VDBX 10M**
	I/O Cable (Super Bend Resistant, Right-angle) ✻1, ✻2	2m	**FHV-VDLBX 2M**
		3m	**FHV-VDLBX 3M**
		5m	**FHV-VDLBX 5M**
		10m	**FHV-VDLBX 10M**
	Ethernet Cable (Bend Resistant)	2m	**FHV-VNB 2M**
		3m	**FHV-VNB 3M**
		5m	**FHV-VNB 5M**
		10m	**FHV-VNB 10M**
		20m	**FHV-VNB 20M**
	Ethernet Cable (Bend Resistant, Right-angle)	2m	**FHV-VNLB 2M**
		3m	**FHV-VNLB 3M**
		5m	**FHV-VNLB 5M**
		10m	**FHV-VNLB 10M**
		20m	**FHV-VNLB 20M**
	Ethernet Cable (Super Bend resistant) ✻2	2m	**FHV-VNBX 2M**
		3m	**FHV-VNBX 3M**
		5m	**FHV-VNBX 5M**
		10m	**FHV-VNBX 10M**
	Ethernet Cable (Super Bend resistant, Right-angle) ✻2	2m	**FHV-VNLBX 2M**
		3m	**FHV-VNLBX 3M**
		5m	**FHV-VNLBX 5M**
		10m	**FHV-VNLBX 10M**
	External Light Conversion Cable for MDMC Light	0.1m	**FHV-VFLX-GD**

✻1. The FHV-VDB/VDLB/VDBX/VDLBX I/O Cable cannot be connected when the smart camera data unit is used.
Use the FHV-VUB/VULB/VUBX/VULBX Smart Camera Data Unit Cable.

✻2. The Super Bend Resistant cables (FHV-VN□BX, FHV-VD□BX) do not protect against water.
(If using them, the IP Protection level for the smart camera will not be IP67, but rather IP60.)
If protection against water is required, please use a Bend Resistant cable (FHV-VN□B, FHV-VD□B).

Smart Camera Data Unit

Item		Model
	Paralle linterface	**FHV-SDU10**
	EtherCAT interface	**FHV-SDU30**

Smart Camera Data Unit Cable

Item			Cable length	Model
	Smart Camera data unit cable(Bend resistant) ✻1		2m	**FHV-VUB 2M**
			3m	**FHV-VUB 3M**
			5m	**FHV-VUB 5M**
			10m	**FHV-VUB 10M**
			20m	**FHV-VUB 20M**
	Smart Camera data unit cable(Bend resistant, Right-angle) ✻1		2m	**FHV-VULB 2M**
			3m	**FHV-VULB 3M**
			5m	**FHV-VULB 5M**
			10m	**FHV-VULB 10M**
			20m	**FHV-VULB 20M**
	Smart Camera data unit cable(Super Bend resistant) ✻1, ✻3		2m	**FHV-VUBX 2M**
			3m	**FHV-VUBX 3M**
			5m	**FHV-VUBX 5M**
			10m	**FHV-VUBX 10M**
	Smart Camera data unit cable(Super Bend resistant, Right-angle) ✻1, ✻3		2m	**FHV-VULBX 2M**
			3m	**FHV-VULBX 3M**
			5m	**FHV-VULBX 5M**
			10m	**FHV-VULBX 10M**
	Parallel I/O Cable		2m	**XW2Z-S013-2**
			5m	**XW2Z-S013-5**
	Parallel I/O Cable for Connector-terminal Conversion Unit Connector-Terminal Block Conversion Units can be connected (Terminal Blocks Recommended Products: OMRON XW2R-□34G-T)		0.5m	**XW2Z-050EE**
			1m	**XW2Z-100EE**
			1.5m	**XW2Z-150EE**
			2m	**XW2Z-200EE**
			3m	**XW2Z-300EE**
			5m	**XW2Z-500EE**
	Connector-Terminal Block Conversion Units, General-purpose devices ✻2	Phillips screw	---	**XW2R-J34GD-T**
		Slotted screw (rise up)	---	**XW2R-E34GD-T**
		Push-in spring	---	**XW2R-P34GD-T**

✻1. The FHV-VDB/VDLB/VDBX/VDLBX I/O Cable cannot be connected when this cable is used.
✻2. Refer to the XW2R Series catalog (Cat. No. G077) for details.
✻3. The Super Bend Resistant cables (FHV-VU□BX) do not protect against water.
(If using them, the IP Protection level for the smart camera will not be IP67, but rather IP60.)
If protection against water is required, please use a Bend Resistant cable (FHV-VU□B).

Accessories

Item			Model
	Base Mount for Smart Cameras and Lighting Controllers		**FHV-XMT-7**
	Base Mount for Lighting Controllers		**FHV-XMT-7-TCC**
	Light Cover (for replacement) ✻1		**FHV-XCV**
	Waterproof Cap (for replacement)	for Ethernet Connecter	**FHV-XWC-ECN**
		for Light Connecter	**FHV-XWC-LCN**
	Waterproof Packing ✻2 (for replacement, 5 pcs)	for Camera	**FHV-XWP-CAM**
		for Lighting Module	**FHV-XWP-LTM**
		for Waterproof Hood	**FHV-XWP-HD-SL**
	Light-shielding for Lighting Module (for replacement, 3 pcs) ✻3		**FHV-XLS-LTM**
	Cover for High-speed Lens Module (for replacement, cover 1pcs, screws 5 pcs (including one spare piece))		**FHV-XFC-LEM-H**
	Cover for Standard Lens Module (for replacement, cover 1pcs, screws 5 pcs (including one spare piece))		**FHV-XFC-LEM-S**
	Cover for C-mount Lens (for replacement, cover 1pcs, screws 5 pcs (including one spare piece))		**FHV-XFC-C**
---	Screw for microSD card cover (for replacement, 10 pcs)		**FHV-XSCR-MSD**

✻1. Adapted lighting module
FHV-LTM-W, FHV-LTM-R, FHV-LTM-IR, FHV-LTM-MC
✻2. Always replace when a module is removed.
✻3. It is considered a consumable item that will deteriorate. Please replace as needed.

Accessories

Item	Descriptions				Model
–	External Lights			LED	**FLV Series**
				High-brightness LED	**FL-BR/DR Series**
				MDMC Light (Built-in lighting controller)	**FL-MD Series**
–	Lighting controller			LED	**FLV-TCC/ATC**
				High-brightness LED	**FL-TCC/STC**
	Industrial Switching Hubs for EtherNet/IP and Ethernet	3 port	Failure detection: None	Current consumption: 0.22 A or less	**W4S1-03B**
		5 port	Failure detection: None	Current consumption: 0.22 A or less	**W4S1-05B**
		5 port	Failure detection: Supported		**W4S1-05C**

Lenses

Refer to the *Vision Accessory Catalog* (Cat. No. Q198) for details.

Resolution	Camera Model	Size of image element	Recommended lens		
			Standard Lens	Telecentric Lens	Vibrations and Shocks Resistant Lens
0.4 million-pixel	FHV7H-□004	1/2.9" equivalent	SV-V Series	VS-TCH Series	VS-MCA Series Non-telecentric Macro VS-MC Series
1.6 million-pixel	FHV7H-□016	1/2.9" equivalent			
3.2 million-pixel	FHV7H-□032	1/1.8" equivalent	SV-H Series		
5 million-pixel	FHV7H-□060	2/3" equivalent			
6.3 million-pixel	FHV7H-□063R	1/1.8" equivalent			
12 million-pixel	FHV7H-□120R	1/1.7" equivalent			

Recommended EtherCAT Communications Cables

Use Straight STP (shielded twisted-pair) cable of category 5 or higher with double shielding (braiding and aluminum foil tape) for EtherCAT.

Cable with Connectors

Item	Appearance	Recommended manufacturer	Cable length (m)	Model
Cable with Connectors on Both Ends (RJ45/RJ45) Standard RJ45 plugs type *1 Wire Gauge and Number of Pairs: AWG26, 4-pair Cable Cable Sheath material: LSZH *2 Cable color: Yellow *3		OMRON	0.3	**XS6W-6LSZH8SS30CM-Y**
			0.5	**XS6W-6LSZH8SS50CM-Y**
			1	**XS6W-6LSZH8SS100CM-Y**
			2	**XS6W-6LSZH8SS200CM-Y**
			3	**XS6W-6LSZH8SS300CM-Y**
			5	**XS6W-6LSZH8SS500CM-Y**
Cable with Connectors on Both Ends (RJ45/RJ45) Rugged RJ45 plugs type *1 Wire Gauge and Number of Pairs: AWG22, 2-pair Cable Cable color: Light blue		OMRON	0.3	**XS5W-T421-AMD-K**
			0.5	**XS5W-T421-BMD-K**
			1	**XS5W-T421-CMD-K**
			2	**XS5W-T421-DMD-K**
			5	**XS5W-T421-GMD-K**
			10	**XS5W-T421-JMD-K**
Cable with Connectors on Both Ends (M12 Straight/M12 Straight) Shield Strengthening Connector cable *4 M12/Smartclick Connectors Wire Gauge and Number of Pairs: AWG22, 2-pair Cable Cable color: Black		OMRON	0.5	**XS5W-T421-BM2-SS**
			1	**XS5W-T421-CM2-SS**
			2	**XS5W-T421-DM2-SS**
			3	**XS5W-T421-EM2-SS**
			5	**XS5W-T421-GM2-SS**
			10	**XS5W-T421-JM2-SS**
Cable with Connectors on Both Ends (M12 Straight/RJ45) Shield Strengthening Connector cable *4 M12/Smartclick Connectors Rugged RJ45 plugs type Wire Gauge and Number of Pairs: AWG22, 2-pair Cable Cable color: Black		OMRON	0.5	**XS5W-T421-BMC-SS**
			1	**XS5W-T421-CMC-SS**
			2	**XS5W-T421-DMC-SS**
			3	**XS5W-T421-EMC-SS**
			5	**XS5W-T421-GMC-SS**
			10	**XS5W-T421-JMC-SS**

*1 Cables with standard RJ45 plugs are available in the following lengths: 0.2 m, 0.3 m, 0.5 m, 1 m, 1.5 m, 2 m, 3 m, 5 m, 7.5 m, 10 m, 15 m, 20 m. Cables with rugged RJ45 plugs are available in the following lengths: 0.3 m, 0.5 m, 1 m, 2 m, 3 m, 5 m, 10 m, 15 m. For details, refer to the Industrial Ethernet Connectors Catalog (Cat. No. G019).

*2 The lineup features Low Smoke Zero Halogen cables for in-cabinet use and PUR cables for out-of-cabinet use. Although the LSZH cable is single shielded, its communications and noise characteristics meet the standards.

*3 Cables colors are available in yellow, green, and blue.

*4 For details, contact your OMRON representative.

Cables / Connectors

Item		Recommended manufacturer	Model
Products for EtherCAT (1000BASE-T/100BASE-TX) Wire gauge and number of pairs: AWG24, 4-pair cable	Cable	Hitachi Metals, Ltd.	**NETSTAR-C5E SAB 0.5 x 4P CP ✻1**
		Kuramo Electric Co.	**KETH-SB ✻1**
		SWCC Showa Cable Systems Co.	**FAE-5004 ✻1**
	RJ45 Connector	Panduit Corporation	**MPS588-C ✻1**
Products for EtherCAT (100BASE-TX/10BASE-T) Wire gauge and number of pairs: AWG22, 2-pair cable	Cable	Kuramo Electric Co.	**KETH-PSB-OMR ✻2**
		JMACS Japan Co., Ltd.	**PNET/B ✻2**
	RJ45 Assembly Connector	OMRON	**XS6G-T421-1 ✻2**

*1 We recommend you to use the above Cable and RJ45 Connector together.
*2 We recommend you to use the above Cable and RJ45 Assembly Connector together.

Touch Panel Monitor

Ask Advantech about the warranty period and coverage of this product.

Item		Model	Recommended manufacturer
	Touch Panel Monitor	**PPC-3100S-OMR**	**Advantech** Find your local office on the Advantech website https://www.advantech.com/contact/offices/
	ARM VESA Standard (A-CLEVER) for PPC Series	**PPC-ARM-A03**	
	Wall mount kit for PPC Series	**PPC-174T-WL-MTE**	
	Stand for PPC Series	**PPC-Stand-A1E**	
	ADP A/D 100-240V 90W 19V W/PFC	**96PSA-A90W19OT-3**	
	Power cord 3P UL 10 A 125 V 1.8 m	**1700001524**	
	Power cord 3P Europe (WS-010+083) 1.83 m	**170203183C**	
	Power cord 3P/3P PSE 1.8 m	**1700008921**	
	Power cord 3P CCC (China) 1.8 m	**96CB-POWER-B-1.8M**	

Recommended Industrial Touch Panel IPC/ Monitor
If you require a more industrial solution or larger screensizes, our FHV7 smart camera's work perfect with Omron's Industrial PC systems (e.g. NYP-series)
Find your preferred Industrial PC systems at: http://www.ia.omron.com/products/family/3633/

Automation Software Sysmac Studio

Please purchase a DVD and licenses the first time you purchase the Sysmac Studio. DVDs and licenses are available individually. The license does not include the DVD.

Item	Specifications	Number of licenses	Media	Model
Sysmac Studio Standard Edition Ver.1.□□	The Sysmac Studio is the software that provides an integrated environment for setting, programming, debugging and maintenance of machine automation controllers including the NJ/NX-series CPU Units, NY-series Industrial PC, EtherCat Slave, and the HMI. Sysmac Studio runs on the following OS. Windows 7 (32-bit/64-bit version) / Windows 8 (32-bit/64-bit version) / Windows 8.1 (32-bit/64-bit version) / Windows 10 Pro (32/64bit) or Enterprise (32/64bit) *1 This software provides functions of the Vision Edition. Refer to your local OMRON website for details such as supported models and functions.	-- (Media only)	Sysmac Studio (32bit) DVD *2	**SYSMAC-SE200D**
		-- (Media only)	Sysmac Studio (64bit) DVD *2	**SYSMAC-SE200D-64**
		1 license *3	—	**SYSMAC-SE201L**
Sysmac Studio Vision Edition Ver.1.□□ *4	Sysmac Studio Vision Edition is a limited license that provides selected functions required for Vision Sensor FH-series/Smart Camera FHV7-series/FQ-M-series settings.	1 license	—	**SYSMAC-VE001L**

✻1. Model "SYSMAC-SE200D-64" runs on Windows 10 (64bit).
✻2. The same media is used for both the Standard Edition and the Vision Edition.
✻3. Multi licenses are available for the Sysmac Studio (3, 10, 30, or 50 licenses).
✻4. This product is a license only. You need the Sysmac Studio Standard Edition DVD media to install it.

Ratings and Specifications

Smart Camera

Item			Model	FHV7H-M004-C	FHV7H-C004-C	FHV7H-M016-C	FHV7H-C016-C	FHV7H-M032-C	FHV7H-C032-C	FHV7H-M050-C	FHV7H-C050-C	FHV7H-M063R-C	FHV7H-C063R-C	FHV7H-M120R-C	FHV7H-C120R-C
Specifications	Operation Mode	Standard		Yes											
		Double speed multi-input		Yes											
		Non-stop adjustment mode		Yes											
	Parallel processing			Yes											
	Possible No. of captured images			256		64		36		25		19		10	
	Possible No. of logging images to Smart Camera			214		52		25		15		12		5	
	Possible No. of scenes			128 ✻1											
	UI operation			Remote Operation Tool											
	Setup			Create the processing flow using Flow editing.											
	Language			Japanese, English, Simplified Chinese, Traditional Chinese, German, French, Italian, Spanish, Korean, Vietnamese, Polish											
Imaging	CMOS Image elements			1/2.9-inch equivalent		1/2.9-inch equivalent		1/1.8-inch equivalent		2/3-inch equivalent		1/1.8-inch equivalent		1/1.7-inch equivalent	
	Color/Monochrome			Monochrome	Color	Monochrome	Color	Monochrome	Color	Monochrome	Color	Monochrome	Color	Monochrome	Color
	Effective pixels (H x V)			720 × 540		1440 × 1080		2048 × 1536		2448 × 2048		3072 × 2048		4000 × 3000	
	Pixel size			6.9 × 6.9 μm		3.45 × 3.45 μm		3.45 × 3.45 μm		3.45 × 3.45 μm		2.4 × 2.4 μm		1.85 × 1.85 μm	
	Imaging area H × V (opposing corner)			5.0 × 3.8 (6.3 mm)		5.0 × 3.8 (6.3 mm)		7.1 × 5.3 (8.9 mm)		8.5 × 7.1 (11.1 mm)		7.4 × 5.0 (8.9 mm)		7.4 × 5.6 (9.3 mm)	
	Shutter system			Global Shutter								Rolling shutter (Global reset mode compatible)			
	Shutter function			Electronic shutter: Shutter speed can be set from 1 μs to 100 ms.								Electronic shutter: Shutter speed can be set from 55 μs to 100 ms.		Electronic shutter: Shutter speed can be set from 84 μs to 100 ms.	
	Partial function			4 to 540 lines (4-line increments)		4 to 1080 lines (4-line increments)		4 to 1536 lines (4-line increments)		4 to 2048 lines (4-line increments)		4 to 2048 lines (4-line increments)		4 to 3000 lines (4-line increments)	
	Frame rate (image acquisition time)			430 fps (2.3 ms)		224 fps (4.5 ms)		55 fps (18.0 ms)		35 fps (28.0 ms)		59 fps (16.7 ms)		19 fps (25.0 ms)	
	Lens mounting			C mount											
	Field of view, Installation distance			Selecting a lens according to the field of view and installation distance											
External Interface	Serial			RS-232C × 1											
	Ethernet			Protocol: Non-procedure (TCP/UDP) I/F: 1000BASE-T × 1											
	EtherNet/IP			Yes (Target/Ethernet port)											
	PROFINET			Yes (Slave/Ethernet port), Conformance class A											
	Parallel I/O			NPN/PNP common											
	Parallel I/O	Input signals		4 signals • STEP (Measurement trigger input) • DI 0 to 2 (Command input signal)											
		Output signals		5 signals • ERROR (ON when there is an error) • OR (Overall Judgement Result) • BUSY (Processing in progress) • READY (ON when Image input is allowed) • STGOUT/SHTOUT (Strobe trigger signal/Shutter output signal)											
	Encoder I/F			N/A											
	Monitor I/F			N/A											
	USB I/F			N/A											
	SD Card I/F			microSD card: SDHC × 1											
Indicator Lamps		Main		PWR: Green, RUN: Green, LINK: Yellow, BUSY: Green, OR: Yellow, ERR: Red											
		SD		SD ACCESS: Yellow											
Supply Voltage				21.6 VDC to 26.4 VDC (When an I/O cable with 20 m is connected, it is 24.0 VDC to 26.4 VDC.)											
Current Consumption				With lighting modules: 4.2 A or less Without lighting modules: 0.60 A											

✻1. The number of scenes can be increased up to 1,024 with the Conversion scene group data tool.

Item	Model	FHV7H-M004-C	FHV7H-C004-C	FHV7H-M016-C	FHV7H-C016-C	FHV7H-M032-C	FHV7H-C032-C	FHV7H-M050-C	FHV7H-C050-C	FHV7H-M063R-C	FHV7H-C063R-C	FHV7H-M120R-C	FHV7H-C120R-C
Usage Environment	Ambient temperature range	Operating: 0 to +40°C, Storage: -25 to +65°C (with no icing or condensation)											
	Ambient humidity range	Operating & Storage: 35 to 85%RH (With no condensation)											
	Ambient atmosphere	No corrosive gases											
	Vibration tolerance	Oscillation frequency: 10 to 150Hz, Half amplitude: 0.35 mm, Vibration direction: X/Y/Z, Sweep time: 8 minute/count, Sweep count: 10 times With standard lens modules, FHV-LEM-S: Half amplitude: 0.15 mm (Others are the same as above.)											
	Shock resistance	Impact force: 150 m/s^2, Test direction: 6 directions, three time each (up/down, front/behind, left/right)											
	Noise immunity	Fast transient burst • DC power Direct infusion: 2kV, Pulse rising: 5 ns, Pulse width: 50 ns, Burst continuation time: 15 ms/0.75 ms, Period: 300 ms, Application time: 1 min. • I/O line Direct infusion: 1kV, Pulse rising: 5 ns, Pulse width: 50 ns, Burst continuation time: 15 ms/0.75 ms, Period: 300 ms, Application time: 1 min.											
	Grounding	Class D grounding (100 Ω or less grounding resistance) ✻2											
External shape	Dimensions	110 mm × 68.5 mm × 55.5 mm (H × W × D)											
	Weight	Approx. 670 g											
	Degree of protection	With lighting modules or waterproof hoods: IEC60529 - IP67 (except a connector cap removed) Other than the above: IEC60529 - IP40											
	Case material	Aluminum die-casting (ADC12)											
Accessories		• Connector cap for Ethernet cable (mounted on the body): 1 • Connector cap for an external lighting (mounted on the body): 1 • C mount cap (mounted on the body): 1 • C mount cover (mounted on the body): 1 • Instruction sheet: 1 • Membership registration: 1 • Compliance sheet: 1											

✻**2.** Existing the third class grounding

Lens Modules

High-speed Lens Modules (Autofocus)

Item		FHV-LEM-H06	FHV-LEM-H19
System		Liquid lens auto focus	
Installation distance		102 to 650 mm	202 to 1050 mm
Horizontal field of view range ✻	0.4 million pixels	64 × 48 mm to 505 × 376 mm	50 × 37 mm to 266 × 200 mm
	1.6 million pixels		
	3.2 million pixels	92 × 68 mm to 731 × 539 mm	71 × 53 mm to 378 × 284 mm
	6.3 million pixels	97 × 63 mm to 766 × 499 mm	74 × 49 mm to 394 × 264 mm
Focal length ✻		6 mm	19 mm
Usage environment	Ambient temperature range	Operating: 0 to +40°C, Storage: -25 to +65°C (with no icing or condensation)	
	Ambient humidity range	Operating & Storage: 35 to 85%RH (With no condensation)	
	Ambient atmosphere	No corrosive gases	
	Vibration tolerance	Oscillation frequency: 10 to 150Hz, Half amplitude: 0.35 mm, Vibration direction: X/Y/Z, Sweep time: 8 minute/count, Sweep count: 10 times	
	Shock resistance	Impact force: 150 m/s^2, Test direction: 6 directions, three time each (up/down, front/behind, left/right)	
External shape	Dimension	50 mm × 41.1 mm × 37.1 mm (H × W × D)	50 mm × 41.1 mm × 36.3 mm (H × W × D)
	Weight	Approx. 25 g	
	Case material	Polycarbonate	
Accessories		• Special cover for FHV-LEM-H: 1 • Screws: M3 × 8 mm: 5 (including one spare piece) • Instruction sheet : 1 • Compliance sheet: 1	

✻ Refer to optical chart (P.50) for details.

Standard Lens Modules (Autofocus)

Item		FHV-LEM-S06	FHV-LEM-S09	FHV-LEM-S12	FHV-LEM-S16	FHV-LEM-S25
System		Mechanical auto focus				
Focal length range ✻1		59 to 1,000 mm	60 to 1,000 mm	60 to 1,000 mm	110 to 2,000 mm	188 to 2,000 mm
Horizontal field of view range ✻1	0.4 million pixels	39 × 29 to 845 × 624 mm	24 × 18 to 543 × 407 mm	17 × 13 to 407 × 305 mm	27 × 20 to 614 × 461 mm	30 × 23 to 391 × 293 mm
	1.6 million pixels					
	3.2 million pixels	57 × 42 to 1,234 × 905 mm	34 × 25 to 772 × 579 mm	24 × 18 to 579 × 434 mm	38 × 29 to 874 × 655 mm	43 × 33 to 556 × 417 mm
	6.3 million pixels	50 × 39 to 1,293 × 836 mm	35 × 23 to 807 × 538 mm	25 × 17 to 606 × 404 mm	40 × 27 to 913 × 608 mm	45 × 30 to 581 × 387 mm
Focal length		6 mm	9 mm	12 mm	16 mm	25 mm
Usage environment	Ambient temperature range	Operating: 0 to +40°C, Storage: -25 to +65°C (with no icing or condensation)				
	Ambient humidity range	Operating & Storage: 35 to 85%RH (With no condensation)				
	Ambient atmosphere	No corrosive gases				
	Vibration tolerance	Oscillation frequency: 10 to 150Hz, Half amplitude: 0.15 mm ✻2, Vibration direction: X/Y/Z, Sweep time: 8 minute/count, Sweep count: 10 times				
	Shock resistance	Impact force: 150 m/s^2, Test direction: 6 directions, three time each (up/down, front/behind, left/right)				
External shape	Dimension	50 mm × 41 mm × 31 mm (H × W × D)				
	Weight	Approx. 50 g				
	Case material	Polycarbonate				
Accessories		• Special cover for FHV-LEM-S: 1 • Screws: M3 × 8 mm: 5 (including one spare piece) • Instruction sheet : 1 • Compliance sheet: 1				

✻1. Refer to optical chart (P.50) for details.
✻2. When the lens module is mounted to the product, the vibration tolerance is applied for the specifications of the smart camera.

Lighting Modules

Model		FHV-LTM-W	FHV-LTM-R	FHV-LTM-IR	FHV-LTM-MC
Color		White	Red	Infrared light	Multi color
Peak wave length		-	Typ. 630 nm	Typ. 850 nm	R: Typ. 630 nm G: Typ. 525 nm B: Typ. 465 nm IR: Typ. 850 nm
Light source		LED	LED	LED	LED
Risk group		Group 2	Group 1	Group 1	R: Group 1 G: Group 2 B: Group 2 IR: Group 1
Usage environment	Ambient temperature range	Operating: 0 to +40°C, Storage: -25 to +65°C (with no icing or condensation)			
	Ambient humidity range	Operating & Storage: 35 to 85%RH (With no condensation)			
	Ambient atmosphere	No corrosive gases			
	Vibration tolerance	Oscillation frequency: 10 to 150Hz, Half amplitude: 0.35 mm, Vibration direction: X/Y/Z, Sweep time: 8 minute/count, Sweep count: 10 times			
	Shock resistance	Impact force: 150 m/s^2, Test direction: 6 directions, three time each (up/down, front/behind, left/right)			
Dimensions		52 mm × 91 mm × 77 mm (H × W × D)			
Weight		270 g	270 g	270 g	270 g
Material		Aluminum die-casting (ADC12), polycarbonate			
Accessories		• Waterproof packing (small) FHV-XWP-CAM:1 • Waterproof packing (large) FHV-XWP-LTM: 1 • Light shielding sheet FHV-XLS-LTM: 1 • Lighting cover FHV-XCV: 1 • Hexagonal wrench (length: 60 mm): 1 • Instruction sheet: 1 • Compliance sheet: 1			

Optical Filters

Model		FHV-XDF	FHV-XPL	FHV-XPL-IR
Filter type		Diffusion filter	Polarization filter	Polarization filter
Wavelength		Visible to infrared	Visible	Visible to infrared
Adapted lighting module		FHV-LTM-W FHV-LTM-R FHV-LTM-IR FHV-LTM-MC	FHV-LTM-W FHV-LTM-R FHV-LTM-MC (Infrared light is not used.)	FHV-LTM-W FHV-LTM-R FHV-LTM-IR FHV-LTM-MC
Usage environment	Ambient temperature range	Operating: 0 to +40°C, Storage: -25 to +65°C (with no icing or condensation)		
	Ambient humidity range	Operating & Storage: 35 to 85%RH (With no condensation)		
	Vibration tolerance	No corrosive gases		
	Shock resistance	Oscillation frequency: 10 to 150Hz, Half amplitude: 0.35 mm, Vibration direction: X/Y/Z, Sweep time: 8 minute/count, Sweep count: 10 times		
	Vibration tolerance	Impact force: 150 m/s^2, Test direction: 6 directions, three time each (up/down, front/behind, left/right)		
Material		Aluminum (A6061), polycarbonate		
Weight		Approx. 70 g	Approx. 70 g	Approx. 70 g

Waterproof Hoods

Model		FHV-XHD-S	FHV-XHD-L	FHV-XHD-LEM
Suitable lens		3Z4S-LE SV-V series SV-0614V SV-0813V SV-1214V SV-1614V SV-2514V	3Z4S-LE SV-H series SV-0614H ✻1 SV-0814H ✻2 SV-1214H SV-1614H SV-2514H SV-3514H SV-5014H	FHV-LEM-S series FHV-LEM-S06 FHV-LEM-S09 FHV-LEM-S12 FHV-LEM-S16 FHV-LEM-S25 FHV-LEM-H series FHV-LEM-H06 FHV-LEM-H09
Usage environment	Ambient temperature range	Operating: 0 to +40°C, Storage: -25 to +65°C (with no icing or condensation)		
	Ambient humidity range	Operating & Storage: 35 to 85%RH (With no condensation)		
	Ambient atmosphere	No corrosive gases		
	Vibration tolerance	Oscillation frequency: 10 to 150Hz, Half amplitude: 0.35 mm, Vibration direction: X/Y/Z, Sweep time: 8 minute/count, Sweep count: 10 times		
	Shock resistance	Impact force: 150 m/s^2, Test direction: 6 directions, three time each (up/down, front/behind, left/right)		
Material		Aluminum (A6061), polycarbonate		
Weight		Approx. 220 g	Approx. 220 g	Approx. 220 g

✻**1.** This is not available in FHV7H-□050, FHV7H-□063R, FHV7H-□120R.
✻**2.** This is not available in FHV7H-□050.

Smart Camera Data Unit

Item		Parallel interface	EtherCAT interface
Model		FHV-SDU10	FHV-SDU30
Input/output specifications	**Parallel I/O**	Input: 12 Output: 24 (NPN/PNP combined use)	Input: 1 Output: 2 (NPN/PNP combined use)
	EtherCAT communications	None	Yes (slave)
Smart Camera Interface		Special cable to connect No. of connectable cameras: 1	
Indicator	**Main**	POWER: Green, ERROR: Red, RUN: Green, BUSY: Green, CAMERA: Yellow, OR: Yellow	
	EtherCAT	None	ECAT RUN: Green, LINK/ACT IN: Green, LINK/ACT OUT: Green, ECAT ERROR: Red
Power supply voltage		21.6 to 26.4 VDC (Note: 24.0 to 26.4 VDC when a data unit cable with 20 m is connected.)	
Insulation resistance		Between DC terminal block and FG terminal: 0.5 MΩ (250V Megger)	
Current consumption		4.5 A or less	
Usage environment	**Ambient temperature range**	Operating: 0 to +50°C, Storage: -25 to +65°C (with no icing or condensation)	
	Ambient humidity range	Operating and storage: 35 to 85%RH (with no condensation)	
	Ambient atmosphere	No corrosive gases	
	Vibration tolerance	Oscillation frequency: 10 to 150 Hz, Half amplitude: 0.1 mm, Vibration direction: X/Y/Z, Sweep time: 8 minutes, Sweep count: 10 times	
	Shock resistance	Impact force: 150 m/s^2, Test direction: 6 directions, Three times each (up/down, front/behind, left/right)	
	Noise immunity	Fast transient burst • DC power Direct infusion: 2 kV, Pulse rising: 5 ns, Pulse width: 50 ns, Burst continuation time: 15 ms / 0.75 ms, Period: 300 ms, Application time: 1 minute • I/O line Coupling clamp: 1 kV, Pulse rising: 5 ns, Pulse width: 50 ns, Burst continuation time: 15 ms / 0.75 ms, Period: 300 ms, Application time: 1 minute	
	Grounding	Class D grounding (100 Ω or less grounding resistance) ❇ Existing the third class grounding	
External shape	**Dimensions**	H (90 mm) × W (93 mm) × D (65 mm)	H (90 mm) × W (124 mm) × D (65 mm)
	Weight	Approx. 250 g	Approx. 325 g
	Degree of protection	IEC60529 - IP20	
	Case material	PC+ABS, PC	
Accessories		• Instruction sheet: 1 • Compliance sheet: 1	

I/O cables

Bending Resistance Cables

Item		FHV-VDB 2M	FHV-VDLB 2M	FHV-VDB 3M	FHV-VDLB 3M	FHV-VDB 5M	FHV-VDLB 5M	FHV-VDB 10M	FHV-VDLB 10M	FHV-VDB 20M	FHV-VDLB 20M
Cable length		2 m		3 m		5 m		10 m		20 m	
Connector type		Straight connector	Right angle connector	Straight connector	Right angle connector	Straight connector	Right angle connector	Straight connector	Right angle connector	Straight connector	Right angle connector
Cable type		Bending resistance cable									
Size	Power line	AWG21									
	Others	AWG26									
Outer diameter		9.0±0.3 mm dia.									
Min. bending radius		Fixed use: 54 mm, Sliding use: 72 mm									
Input/Output signals	Input signals	4 signals: STEP, DI 0 to 2									
	Output signals	5 signals: ERROR, OR, BUSY, READY, STGOUT/SHTOUT									
	RS-232C	2 signals: Transmission data, Reception data									
Usage environment	Ambient temperature range	Operating: -30 to +80°C, Storage: -30 to +100°C (with no icing or condensation)									
	Ambient humidity range	Operating & Storage: 0 to 93%RH (With no condensation)									
	Ambient atmosphere	No corrosive gases									
	Vibration tolerance	Oscillation frequency: 10 to 150 Hz, Half amplitude: 0.35 mm, Vibration direction: X/Y/Z, Sweep time: 8 minute/count, Sweep count: 10 times									
	Shock resistance	Impact force: 150 m/s^2, Test direction: 6 directions, three time each (up/down, front/behind, left/right)									
Material		Mold part: Nylon, Thermoplastic polyurethane, Sheath part: PVC									
Weight		Approx. 270 g		Approx. 390 g		Approx. 620 g		Approx. 1200 g		Approx. 2350 g	

Super Bending Resistance Cables

Item		FHV-VDBX 2M	FHV-VDLBX 2M	FHV-VDBX 3M	FHV-VDLBX 3M	FHV-VDBX 5M	FHV-VDLBX 5M	FHV-VDBX 10M	FHV-VDLBX 10M
Cable length		2 m		3 m		5 m		10 m	
Connector type		Straight connector	Right angle connector	Straight connector	Right angle connector	Straight connector	Right angle connector	Straight connector	Right angle connector
Cable type		Super bending resistance cable							
Outer diameter		7.2±0.3 mm dia.							
Min. bending radius		44 mm							
Input/Output signals	Input signals	1 signal: STEP							
	Output signals	3 signals: OR, READY, STGOUT/SHTOUT							
Usage environment	Ambient temperature range	Operating: -30 to +80°C, Storage: -30 to +100°C (with no icing or condensation)							
	Ambient humidity range	Operating & Storage: 0 to 93%RH (With no condensation)							
	Ambient atmosphere	No corrosive gases							
	Vibration tolerance	Oscillation frequency: 10 to 150 Hz, Half amplitude: 0.35 mm, Vibration direction: X/Y/Z, Sweep time: 8 minute/count, Sweep count: 10 times							
	Shock resistance	Impact force: 150 m/s^2, Test direction: 6 directions, three time each (up/down, front/behind, left/right)							
Material		Mold part: Nylon, Thermoplastic polyurethane, Sheath part: PVC							
Weight		Approx. 190 g		Approx. 260 g		Approx. 400 g		Approx. 750 g	

Ethernet Cables

Bending Resistance Cables

Item		FHV-VNB 2M	FHV-VNLB 2M	FHV-VNB 3M	FHV-VNLB 3M	FHV-VNB 5M	FHV-VNLB 5M	FHV-VNB 10M	FHV-VNLB 10M	FHV-VNB 20M	FHV-VNLB 20M
Cable length		2 m		3 m		5 m		10 m		20 m	
Connector type		Straight connector	Right angle connector	Straight connector	Right angle connector	Straight connector	Right angle connector	Straight connector	Right angle connector	Straight connector	Right angle connector
Cable type		Bending resistance cable									
Outer diameter		7.2+0.3 mm dia.									
Min. bending radius		Fixed use: 35 mm, Sliding use: 70 mm									
Usage environment	Ambient temperature range	Operating: -40 to +80°C, Storage: -40 to +100°C (with no icing or condensation)									
	Ambient humidity range	Operating & Storage: 0 to 93%RH (With no condensation)									
	Ambient atmosphere	No corrosive gases									
	Vibration tolerance	Oscillation frequency: 10 to 150 Hz, Half amplitude: 0.35 mm, Vibration direction: X/Y/Z, Sweep time: 8 minute/count, Sweep count: 10 times									
	Shock resistance	Impact force: 150 m/s^2, Test direction: 6 directions, three time each (up/down, front/behind, left/right)									
Material		Mold part: Nylon, Thermoplastic polyurethane, Sheath part: Polyurethane									
Weight		Approx. 210 g		Approx. 240 g		Approx. 310 g		Approx. 380 g		Approx. 730 g	

Super Bending Resistance Cables

Item		FHV-VNBX 2M	FHV-VNLBX 2M	FHV-VNBX 3M	FHV-VNLBX 3M	FHV-VNBX 5M	FHV-VNLBX 5M	FHV-VNBX 10M	FHV-VNLBX 10M
Cable length		2 m		3 m		5 m		10 m	
Connector type		Straight connector	Right angle connector	Straight connector	Right angle connector	Straight connector	Right angle connector	Straight connector	Right angle connector
Cable type		Super bending resistance cable							
Outer diameter		6.3+0.6 mm dia.							
Min. bending radius		38 mm							
Usage environment	Ambient temperature range	Operating: -30 to +80°C, Storage: -30 to +100°C (with no icing or condensation)							
	Ambient humidity range	Operating & Storage: 0 to 93%RH (With no condensation)							
	Ambient atmosphere	No corrosive gases							
	Vibration tolerance	Oscillation frequency: 10 to 150 Hz, Half amplitude: 0.35 mm, Vibration direction: X/Y/Z, Sweep time: 8 minute/count, Sweep count: 10 times							
	Shock resistance	Impact force: 150 m/s^2, Test direction: 6 directions, three time each (up/down, front/behind, left/right)							
Material		Mold part: Nylon, Thermoplastic polyurethane, Sheath part: Low friction PVC							
Weight		Approx. 170 g		Approx. 220 g		Approx. 330 g		Approx. 590 g	

External Light Junction Cables for MDMC Light

Item		FHV-VFLX-GD
Cable length		0.1 m
Outer diameter		4.0±0.1 mm dia.
Min. bending radius		15 mm
Usage environment	Ambient temperature range	Operating: 0 to +40°C, Storage: -25 to +65°C (with no icing or condensation)
	Ambient humidity range	Operating & Storage: 0 to 93%RH (With no condensation)
	Ambient atmosphere	No corrosive gases
	Vibration tolerance	Oscillation frequency: 10 to 150 Hz, Half amplitude: 0.35 mm, Vibration direction: X/Y/Z, Sweep time: 8 minute/count, Sweep count: 10 times
	Shock resistance	Impact force: 150 m/s^2, Test direction: 6 directions, three time each (up/down, front/behind, left/right)
Material		Shell part: Zinc alloy and Brass, Sheath part: Heat-resistant oilproof polyvinyl chloride
Weight		Approx. 30 g

Smart Camera Data Unit Cable

Bending Resistance Cables

Item		FHV-VUB 2M	FHV-VULB 2M	FHV-VUB 3M	FHV-VULB 3M	FHV-VUB 5M	FHV-VULB 5M	FHV-VUB 10M	FHV-VULB 10M	FHV-VUB 20M	FHV-VULB 20M
Cable length		2 m		3 m		5 m		10 m		20 m	
Connector type		Straight connector	Right angle connector	Straight connector	Right angle connector	Straight connector	Right angle connector	Straight connector	Right angle connector	Straight connector	Right angle connector
Cable type		Bending resistance cable									
Outer diameter		7.9±0.2 mm dia.									
Min. bending radius		47 mm									
Usage environment	Ambient temperature range	Operating: -10 to +60°C, Storage: -10 to +60°C (with no icing or condensation)									
	Ambient humidity range	Operating & Storage: 0 to 93%RH (With no condensation)									
	Ambient atmosphere	No corrosive gases									
	Vibration tolerance	Oscillation frequency: 10 to 150 Hz, Half amplitude: 0.35 mm, Vibration direction: X/Y/Z, Sweep time: 8 minute/count, Sweep count: 10 times									
	Shock resistance	Impact force: 150 m/s^2, Test direction: 6 directions, three time each (up/down, front/behind, left/right)									
Material		Mold part: Nylon and Thermoplastic polyurethane, Sheath part: PVC									
Weight		Approx. 220 g		Approx. 310 g		Approx. 500 g		Approx. 980 g		Approx. 1,930 g	

Super Bending Resistance Cables

Item		FHV-VUBX 2M	FHV-VULBX 2M	FHV-VUBX 3M	FHV-VULBX 3M	FHV-VUBX 5M	FHV-VULBX 5M	FHV-VUBX 10M	FHV-VULBX 10M
Cable length		2 m		3 m		5 m		10 m	
Connector type		Straight connector	Right angle connector	Straight connector	Right angle connector	Straight connector	Right angle connector	Straight connector	Right angle connector
Cable type		Super bending resistance cable							
Outer diameter		7.5±0.6 mm dia.							
Min. bending radius		47 mm							
Usage environment	Ambient temperature range	Operating: -10 to +60°C, Storage: -10 to +60°C (with no icing or condensation)							
	Ambient humidity range	Operating & Storage: 0 to 93%RH (With no condensation)							
	Ambient atmosphere	No corrosive gases							
	Vibration tolerance	Oscillation frequency: 10 to 150 Hz, Half amplitude: 0.35 mm, Vibration direction: X/Y/Z, Sweep time: 8 minute/count, Sweep count: 10 times							
	Shock resistance	Impact force: 150 m/s^2, Test direction: 6 directions, three time each (up/down, front/behind, left/right)							
Material		Mold part: Nylon and Thermoplastic polyurethane, Sheath part: PVC							
Weight		Approx. 200 g		Approx. 280 g		Approx. 440 g		Approx. 860 g	

Touch panel monitor

Model		PPC-3100S-OMR (Advantech)
LCD	Display Type	10.4" TFT LCD (LED backlight)
	Resolution	1,024 × 768
	Luminance	350 cd/m^2
	Contrast Ratio	1,200
	Backlight Lifetime	30,000 hr (min.)
	Touch Type	Capacitive
External Interface	Ethernet	10/100/1,000 Mbps Ethernet × 2
	USB I/F	USB 2.0 × 1, USB 3.0 × 1
Power Consumption	Input Voltage	12 to 24 VDC
	Power Consumption	16 W
Environment	Ambient Temperature Range	Operating: 0 to 50°C Storage: -40 to 60°C
	Ambient Humidity Range	10% to 95% at 40°C (With no condensation)
	Vibration	Operating Random Vibration Test 5 to 500 Hz, 2 Grms, follow IEC 60068-2-64
	Shock	Operating 10 G peak acceleration (11 ms duration), follow IEC 60068-2-27
	EMC	CE, FCC Class B, BSMI
	Safety	CB, CCC, BSMI, UL
Dimensions		272 × 217 × 46 mm
Weight		1.9 kg
Front Panel Protection		IP65 compliant
Mounting		Panel mount, VESA mount, Wall mount
Accessories		Instruction sheet, Connector for power supply, Mounting screws and brackets for panel mount

EtherCAT Communications Specifications

Item		Specifications
Communications standard		IEC61158 Type 12
Physical layer		100 BASE-TX (IEEE802.3)
Modulation		Base band
Baud rate		100 Mbps
Topology		Depends on the specifications of the EtherCAT master.
Transmission Media		Twisted-pair cable of category 5 or higher (double-shielded straight cable with aluminum tape and braiding)
Transmission Distance		Distance between nodes: 100 m or less
Node address setting		00 to 99
External connection terminals		RJ45 × 2 (shielded) IN: EtherCAT input data, OUT: EtherCAT output data
Send/receive PDO data sizes	**Input**	56 to 280 bytes/line (including input data, status, and unused areas) Up to 8 lines can be set. *
	Output	28 bytes/line (including output data and unused areas) Up to 8 lines can be set. *
Mailbox data size	**Input**	512 bytes
	Output	512 bytes
Mailbox		Emergency messages, SDO requests, and SDO information
Refreshing methods		I/O-synchronized refreshing (DC)

* This depends on the upper limit of the master.

Version Information

FHV7 Series and Programming Devices

Use the latest version of Sysmac Studio Standard Edition/Vision Edition.

Version of FHV7 Series	Corresponding version of Sysmac Studio Standard Edition/Vision Edition
Ver.6.30 or higher	Supported by version 1.29 or higher.

Recommended Operational Environment for Remote Operation Tool

Name	Description
CPU	Intel Pentium Processor (SSE2 or higher)
OS	• Windows 7 Professional (32/64-bit) or Enterprise (32/64-bit) or Ultimate (32/64-bit) • Windows 10 Pro (32/64-bit) or Enterprise (32/64-bit)
Memory	2GB (3GB or more recommended)
Hard disk space	2GB or more
Display	Resolution: 1280 x 1240 dots or more Color: True Color (32-bit)
Network	10BASE-T (100BASE-TX recommended)

Using the FH/FHV Launcher requires Microsoft .NET Framework 3.5 installed.

Parts and Names

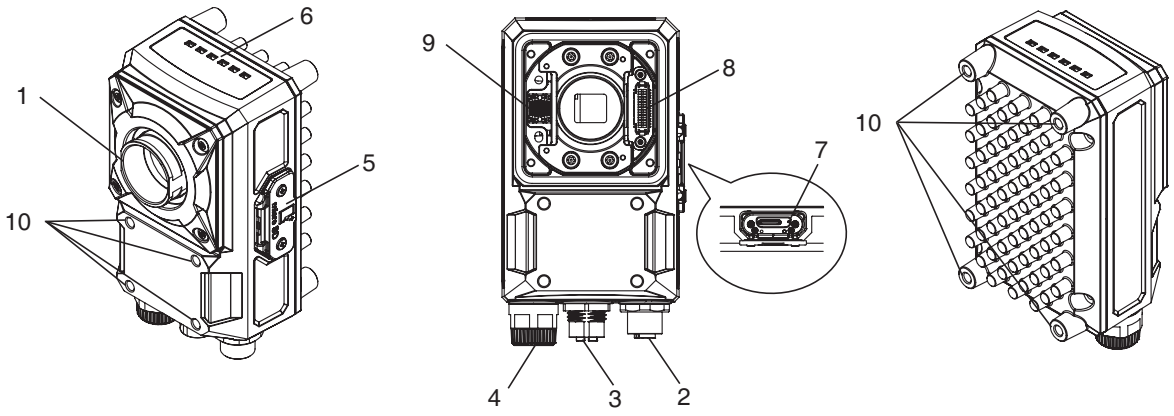

No.	Name		Description
1	Imaging unit		Captures images.
2	Connector for I/O cable/Smart camera data unit cable		Use this connector when connecting the smart camera with its power supply or an external device using an I/O cable. Moreover, use this when connecting the smart camera with its data unit using its data unit cable. Dedicated I/O cable: FHV-VD□ Dedicated smart camera data unit cable: FHV-VU□
3	Connector for Ethernet cable		Use this connector when connecting the smart camera with a personal computer and so on using an Ethernet cable. Dedicated Ethernet cable: FHV-VN□□
4	Connector for external lighting		Use this connector when connecting an external lighting and the external lighting controller. Connectable external lighting controller: FL-TCC□ and FLV-TCC□ Connectable external light: FL-MD□MC
5	Connector to attach microSD card		Use this connector to attach a microSD card. Do not extract/insert the microSD card during processing. Otherwise, measurement time may be influenced or data may be broken.
6	Operation indicator	PWR (Green)	Lights while power is supplied.
		RUN (Green)	Lights when switching to the layout in which the RUN signal output is set ON.
		LINK (Yellow)	Lights when connected with Ethernet equipment and blinks during communication.
		BUSY (Green)	Lights while processing is in progress.
		OR (Yellow)	Lights when the overall judgment output signal is ON.
		ERR (Red)	Lights when an error occurs.
7		SD ACCESS (Yellow)	Lights when accessing to the microSD card.
8	Connector for lighting module (White)		Use this connector when mounting the lighting module.
9	Connector for lens module (Black)		Use this connector when mounting the lens module.
10	Mounting screw holes		Recommended tightening torque: 2.3N·m

Processing Items

Group	Icon	Processing Item	
Measurement		Search	Used to identify the shapes and calculate the position of measurement objects.
		Search Ⅱ	Even if the Search processing item cannot detect a model, the Search II can stably detect it by creating the optimal model according to the size and rotation of the measurement object.
		Flexible Search	Recognizing the shapes of workpieces with variation and detecting their positions.
		Sensitive Search	Search a small difference by dividing the search model in detail, and calculating the correlation.
		Shape Search Ⅲ	Robust detection of positions is possible at high-speed and with high precision incorporating environmental fluctuations, such as differences in individual shapes of the workpieces, pose fluctuations, noise superimposition and shielding.
		Classification	Used when various kinds of products on the assembly line need to be sorted and identified.
		Edge Position	Measure position of measurement objects according to the color change in measurement area.
		Edge Pitch	Detect edges by color change in measurement area. Used for calculating number of pins of IC and connectors.

Group	Icon	Processing Item	
Measurement		Scan Edge Position	Measure peak/bottom edge position of workpieces according to the color change in separated measurement area.
		Scan Edge Width	Measure max/min/average width of workpieces according to the color change in separated measurement area.
		Circular Scan Edge Position	Measure center axis, diameter and radius of circular workpieces.
		Circular Scan Edge Width	Measure center axis, width and thickness of ring workpieces.
		Intersection	Calculate approximate lines from the edge information on two sides of a square workpiece to measure the angle formed at the intersection of the two lines.
		Color Data	Used for detecting presence and mixed varieties of products by using color average and deviation.
		Gravity and Area	Used to measure area, center of gravity of workpices by extracting the color to be measured.
		Labeling	Used to measure number, area and gravity of workpieces by extracting registered color.
		Precise Defect	Check the defect on the object. Parameters for extraction defect can be set precisely.

Group	Icon	Processing Item	
Measurement		Fine Matching	Difference can be detected by overlapping and comparing (matching) registered fine images with input images.
		Character Inspect	Recognize character according correlation search with model image registered in [Model Dictionary].
		Date Verification	Reading character string is verified with internal date.
		Model Dictionary	Register character pattern as dictionary. The pattern is used in [Character Inspection].
		2DCode II *1	Recognize 2D code and display where the code quality is poor.
		2DCode *2	Recognize 2D code and display where the code quality is poor.
		Barcode *3	Recognize barcode, verify and output decoded characters.
		OCR	Recognize and read characters in images as character information.
		OCR User Dictionary	Register dictionary data to use for OCR.
		Glue Bead Inspection	You can inspect coating of a specified color for gaps or runoffs along the coating path.
Input Image		Camera Image Input FHV	To input images from cameras. And set up the conditions to input images from cameras. (For FHV only)
		Camera Image Input HDR	Create high-dynamic range images by acquiring several images with different conditions.
		Measurement Image Switching	To switch the images used for measurement. Not input images from camera again.
		Multi-trigger Imaging	The Multi-trigger Imaging processing item captures multiple images at user-defined timings and executes parallel measurement for each image. Insert the Multi-trigger Imaging to the top of the flow.
		Multi-trigger Imaging Task	The Multi-trigger Imaging processing item captures multiple images at user-defined timings and executes parallel measurement for each image. Insert this processing item to the top of the processing which requires imaging for multiple times.
Compensate image		Position Compensation	Used when positions are differed. Correct measurement is performed by correcting position of input images.
		Filtering	Used for processing images input from cameras in order to make them easier to be measured.
		Background Suppression	To enhance contrast of images by extracting color in specified brightness.
		Brightness Correct Filter	Track brightness change of entire screen and remove gradual brightness change such as uneven brightness.
		Color Gray Filter	Color image is converted into monochrome images to emphasize specific color.
		Extract Color Filter	Convert color image to color extracted image or binary image.
		Anti Color Shading	To remove the irregular color/pattern by uniformizing max.2 specified colors.
		Stripes Removal Filter Ⅱ	Remove the background pattern of vertical, horizontal and diagonal stripes.
		Polar Transformation	Rectify the image by polar transformation. Useful for OCR or pattern inspection printed on circle.
		Trapezoidal Correction	Rectify the trapezoidal deformed image.
		Image Subtraction	The registered model image and measurement image are compared and only the different pixels are extracted and converted to an image.
		Advanced filter	Process the images acquired from cameras in order to make them easier to measure. This processing item consolidates existing image conversion filtering into one processing item and adds extra functions.
Support measurement		Calculation	Used when using the judge results and measured values of ProcItem which are registered in processing units.
		Line Regression	Used for calculating regression line from plural measurement coodinate.
		Circle Regression	Used for calculating regression circle from plural measurement coordinate.
		Precise Calibration	Used for calibration corresponding to trapezoidal distortion and lens distortion.
		Trend Monitor	Used for displaying the information about results on the monitor, facilitating to avoid NG and analyze causes.
		Image Logging	Used for saving the measurement images to the memory and USB memory.
		Image Conversion Logging	Used for saving the measurement images in JPEG and BMP format.
		Elapsed Time	Used for calculating the elapsed time since the measurement trigger input.
		Wait	Processing is stopped only at the set time. The standby time is set by the unit of [ms].

Group	Icon	Processing Item	
Support measurement		Parallelize	A part of the measurement flow is divided into two or more tasks and processed in parallel to shorten the measurement time. This processing item is placed at the top of processing to be performed in parallel.
		Parallelize Task	A part of the measurement flow is divided into two or more tasks and processed in parallel to shorten the measurement time. This processing item is placed immediately before processing to be performed in parallel between Parallelize and Parallelize End.
		Statistics	Used when you need to calculate an average of multiple measurement results.
		Reference Calib Data	Calibration data and distortion compensation data held under other processing items can be referenced.
		Position Data Calculation	The specified position angle is calculated from the measured positions.
		Stage Data	Sets and stores data related to stages.
		Robot Data	Sets and stores data related to robots.
		Vision Master Calibration	This processing item automatically calculates the entire axis movement amount of the control equipment necessary for calibration.
		Convert Position Data	The position angle after the specified axis movement is calculated.
		Movement Single Position	The axis movement that is required to match the measured position angle to the reference position angle is calculated.
		Movement Multi Points	The axis movements that are required to match the measured position angles to the corresponding reference position angles are calculated.
		Camera Calibration	By setting the camera calibration, the measurement result can be converted and output as actual dimensions.
		Scene	The specified scene is copied to the current scene.
		System Information	Obtain system information (e.g., memory and disk space and I/O input signal status) of the Sensor Controller.
Branch		End	This ProcItem must be set up as the last processing unit of a branch.
		Conditional Execution (If)	The measurement flow is divided according to the comparison result obtained using the set expressions and conditions.
		Conditional Execution (Else)	Insert between the Conditional Execution (If) processing item and End If processing item. The measurement flow is divided according to the comparison result obtained using the set expressions and conditions.
		Loop	The set processes are repeated until the loop count reaches the specified number, and then the next process starts.
		Loop Suspension	Insert between the Loop processing item and End Loop processing item. Used to stop the loop before the loop count reaches the specified number.
		Select Execution (Select)	Used to set conditions. The measurement flow is divided according to the comparison result obtained using the conditions given by expressions.
		Select Execution (Case)	Used to make a judgment. The measurement flow is divided according to the comparison result obtained using the conditions given by expressions.
Output result		Result Output (I/O)	Output data to the external devices such as a programmable controller or a PC via PLC Link, Fieldbus interface (EtherCAT ✻4, EtherNet/IP (other than message communication), PROFINET).
		Result Output (Message)	Output data to the external devices such as a programmable controller or a PC with non-procedure mode via Ethernet or RS-232C. This processing item allows you to save the logging data as a ".csv" file into the Sensor Controller as well.
		Result output (Parallel I / O)	Output measurement results and/or judgment results to the external devices such as a programmable controller or a PC via Parallel interface ✻5.
Display result		Result Display	Used for displaying the texts or the figures in the camera image.
		Display Last NG Image	Display the last NG images.
		Display Image Hold	Processing item to retain images, including measurement results.

*1 2D Codes that can be read : Data Matrix (ECC200)
*2 2D Codes that can be read : Data Matrix (ECC200), QR Code
*3 Bar Codes that can be read : JAN/EAN/UPC (including add-on codes), Code 39, Codabar (NW-7), ITF (Interleaved 2 of 5), Code 93, Code 128, GS1-128, GS1 DataBar (RSS-14 / RSS Limited / RSS Expanded), Pharmacode
*4 The FHV-SDU30 EtherCAT Interface is required for EtherCAT connection.
*5 The FHV-SDU10 Parallel Interface is required for Parallel I/O connection.

Dimensions

(Unit: mm)

Smart Cameras

C Mount Models
FHV7H-□□□□□-C

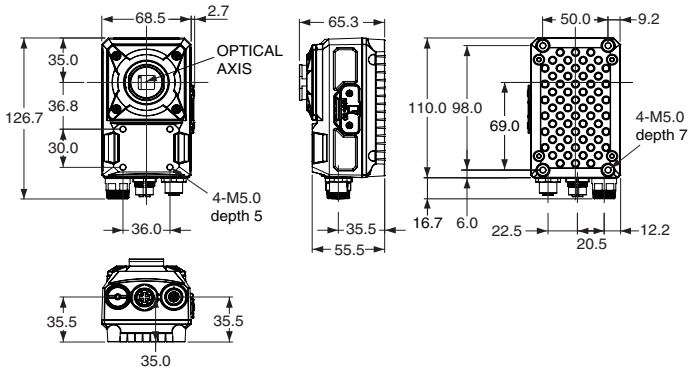

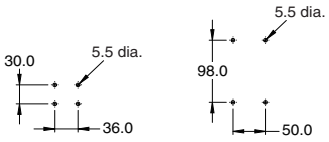

Mounting screw holes
(The tolerance: ± 0.1 mm)
Recommenden tightening torque: 2.3N·m

All-in-one Models with Lens Module
High-speed Lens Modules
FHV7H-□□□□□-H06

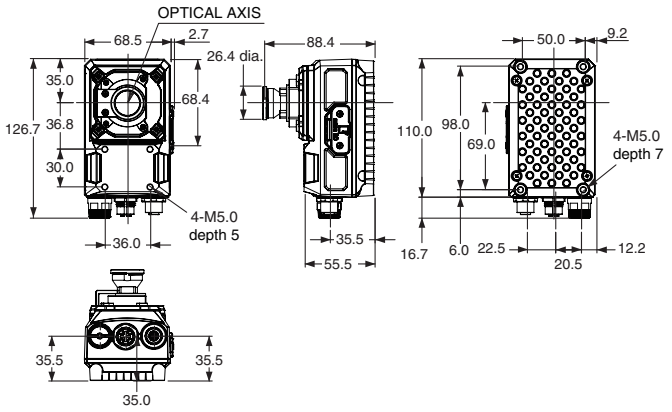

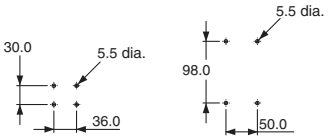

Mounting screw holes
(The tolerance: ± 0.1 mm)
Recommenden tightening torque: 2.3N·m

FHV7H-□□□□□-H19

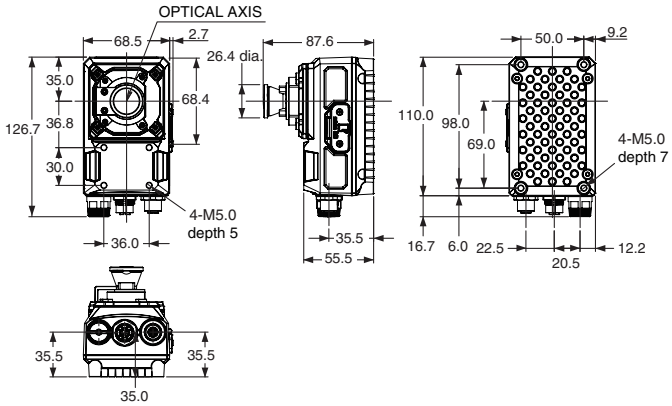

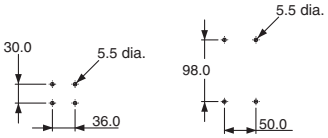

Mounting screw holes
(The tolerance: ± 0.1 mm)
Recommenden tightening torque: 2.3N·m

Standard Lens Modules
FHV7H-□□□□□-S□□

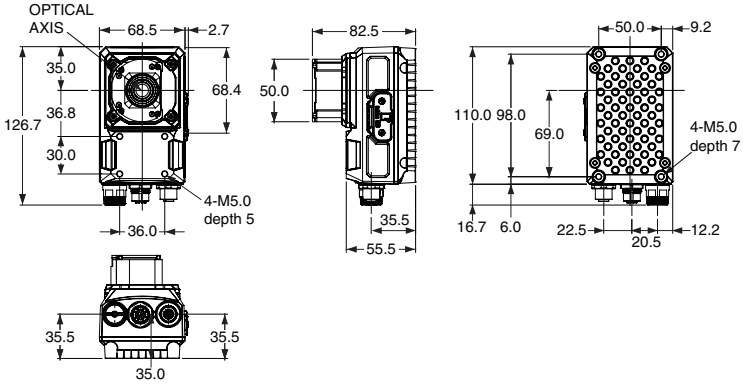

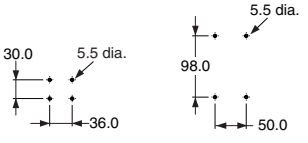

Mounting screw holes
(The tolerance: ± 0.1 mm)
Recommenden tightening torque: 2.3N·m

All-in-one Models with Lens and Lighting Modules
FHV7H-□□□□□-H□□-□□/
FHV7H-□□□□□-S□□-□□

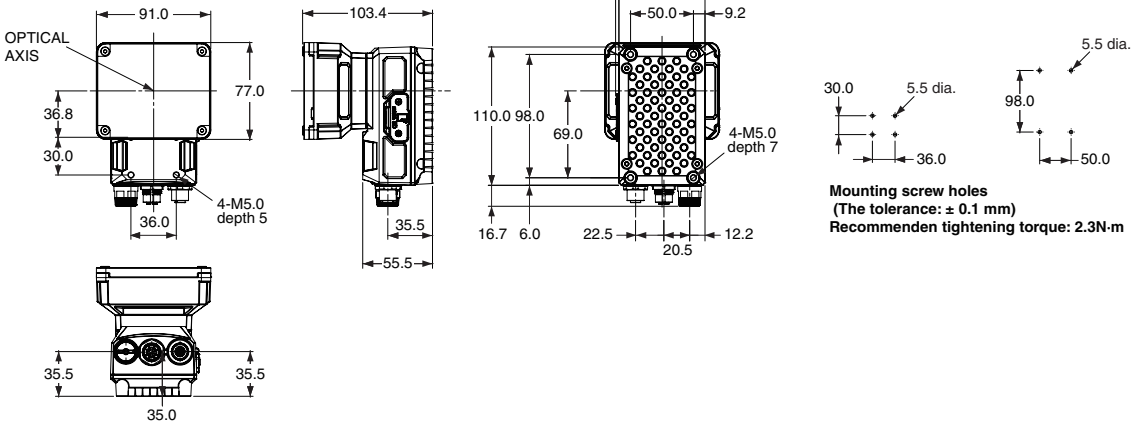

Mounting screw holes
(The tolerance: ± 0.1 mm)
Recommenden tightening torque: 2.3N·m

Lens Modules

High-speed Lens Modules
FHV-LEM-H06

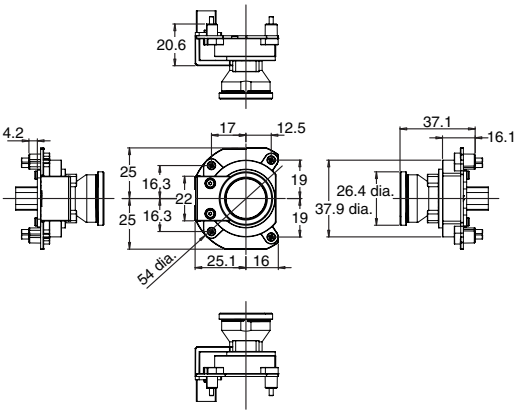

FHV-LEM-H19

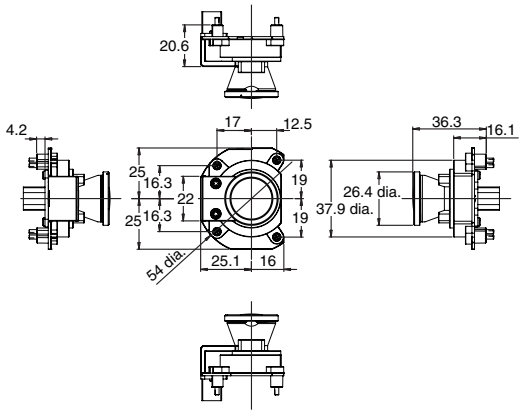

Standard Lens Modules
FHV-LEM-S□□

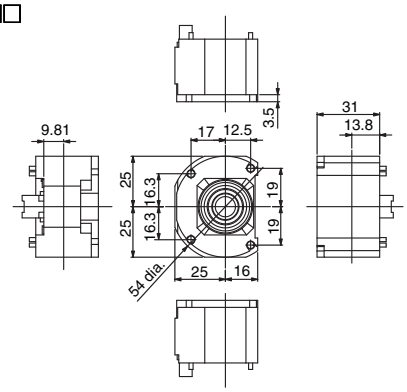

Lighting Modules
FHV-LTM-□□

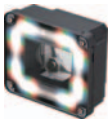

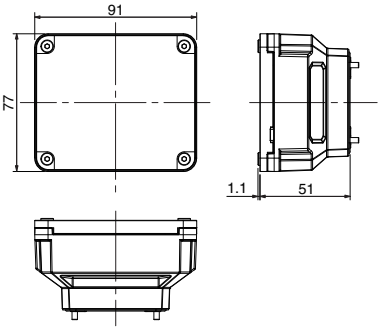

Smart Camera Data Unit

FHV-SDU10

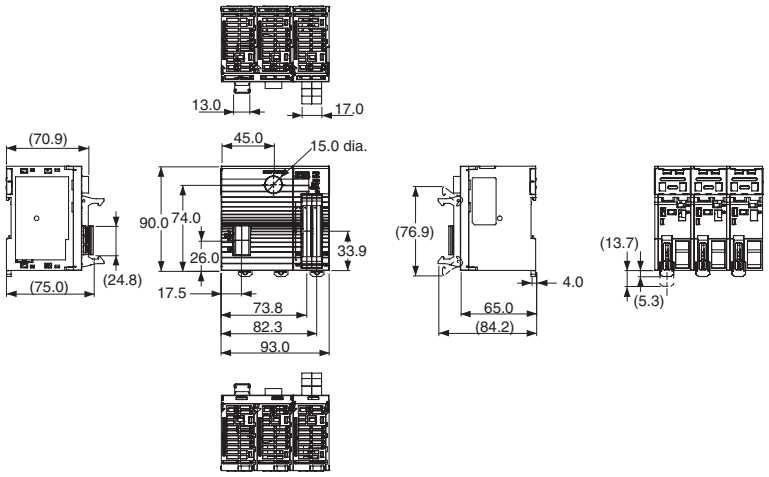

FHV-SDU30

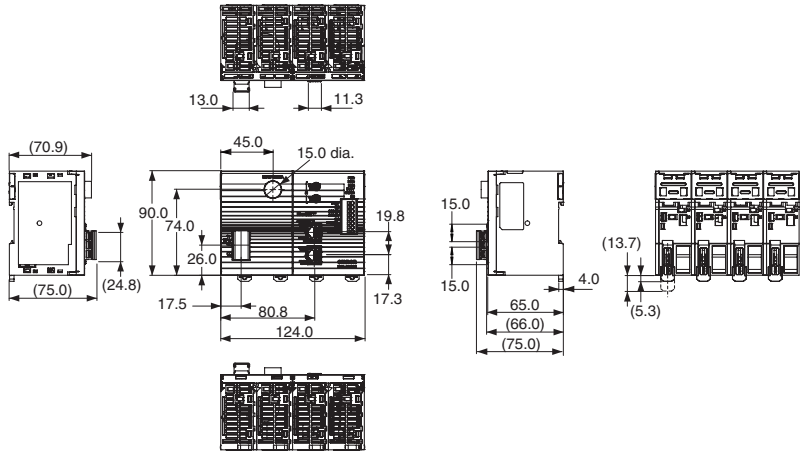

Smart Camera Data Unit Cables

Bending Resistance Cables (Straight)
FHV-VUB ☐M

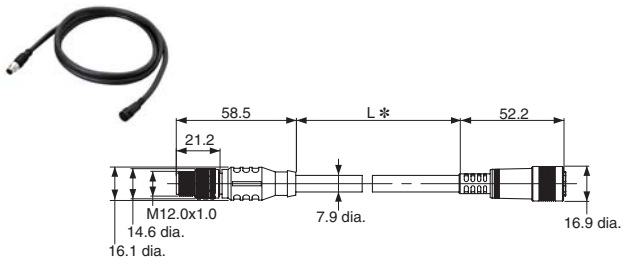

Bending Resistance Cables (Right angle)
FHV-VULB ☐M

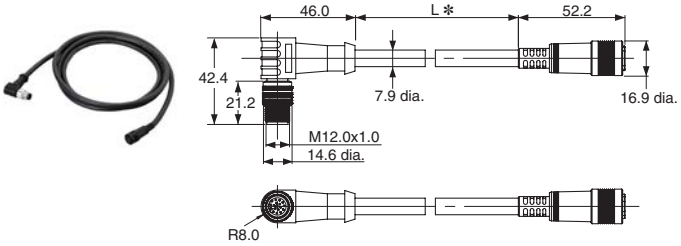

✻Cable is available in 2m/3m/5m/10m/20m.

Super Bending Resistance Cables (Straight)
FHV-VUBX ☐M

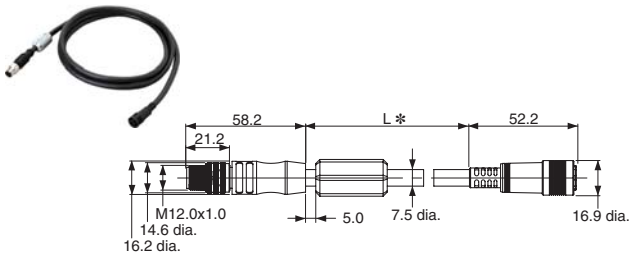

Super Bending Resistance Cables (Right angle)
FHV-VULBX ☐M

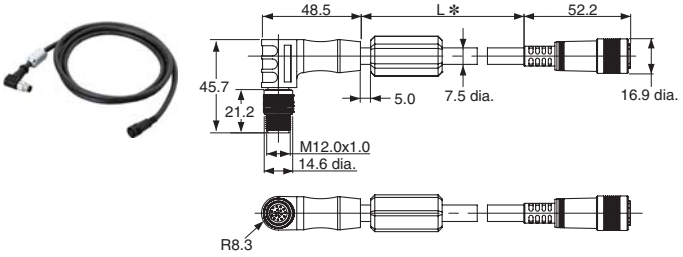

✻Cable is available in 2m/3m/5m/10m.

Cables

I/O cable (Bend resistant, straight)
FHV-VDB ☐M

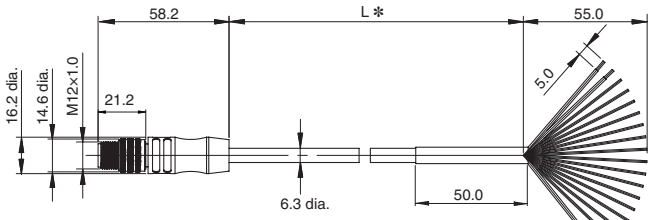

I/O cable (Bend resistant, right angle)
FHV-VDLB ☐M

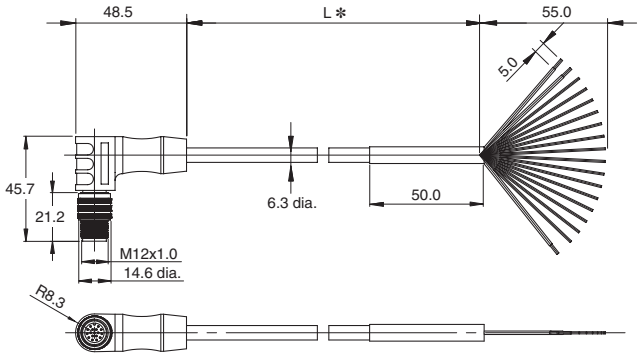

✻ Cable is available in 2m/3m/5m/10m/20m.

I/O cable (Super bend resistant, straight)
FHV-VDBX ☐M

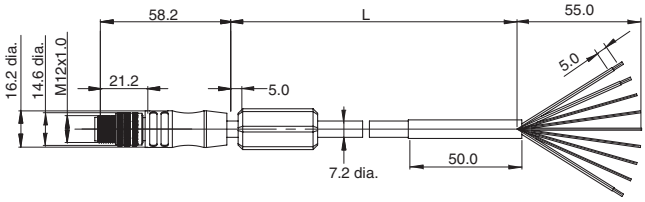

I/O cable (Super bend resistant, right angle)
FHV-VDLBX ☐M

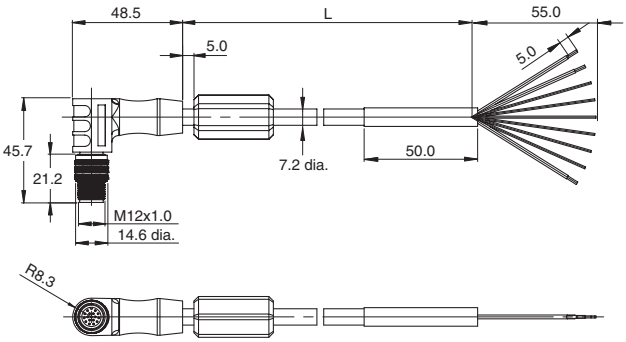

✻ Cable is available in 2m/3m/5m/10m.

Ethernet cable (Bend resistant, straight)
FHV-VNB ☐M

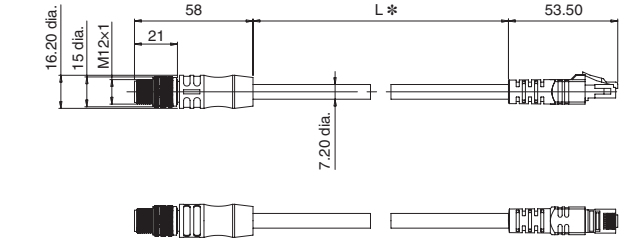

Ethernet cable (Bend resistant, right angle)
FHV-VNLB ☐M

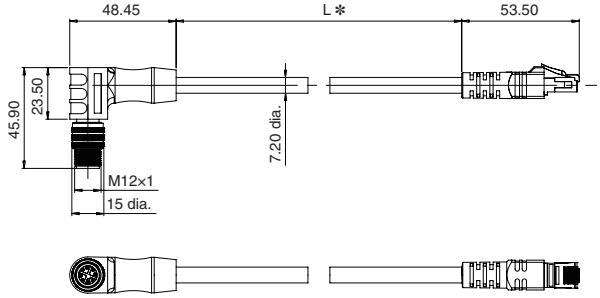

✻ Cable is available in 2m/3m/5m/10m/20m.

Ethernet cable (Super bend resistant, straight)
FHV-VNBX ☐M

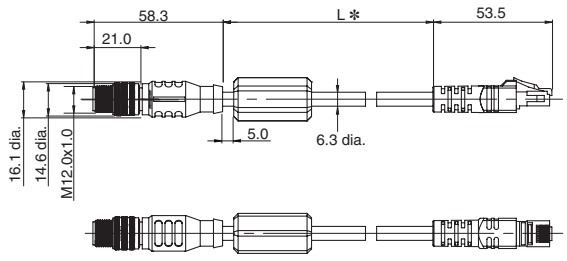

Ethernet cable (Super bend resistant, right angle)
FHV-VNLBX ☐M

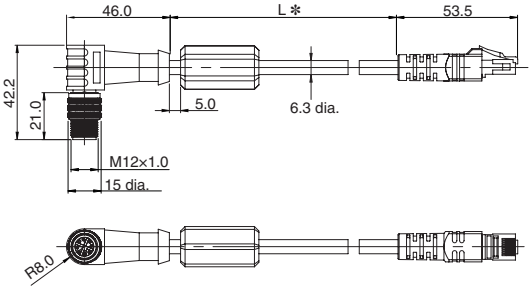

✻Cable is available in 2m/3m/5m/10m/20m.

External Light Junction Cables for MDMC Light

FHV-VFLX-GD

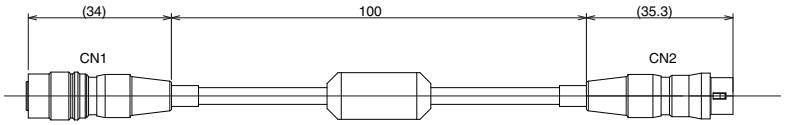

Optical Filters

Polarization Filter, Diffusion Filter
FHV-XDF/-XPL/-XPL-IR

Light Cover

FHV-XCV

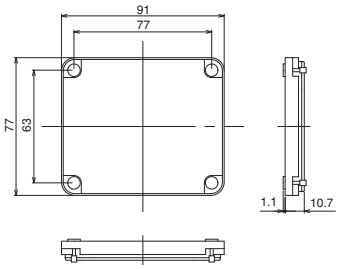

Touch Panel Monitor

Advantech PPC-3100S-OMR

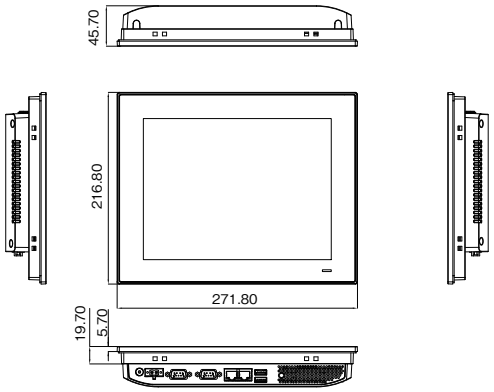

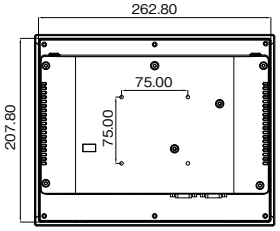

Panel Cutout Dimensions: 265 x 210 mm

Waterproof Hoods

for C-mount Lens (Short)
FHV-XHD-S

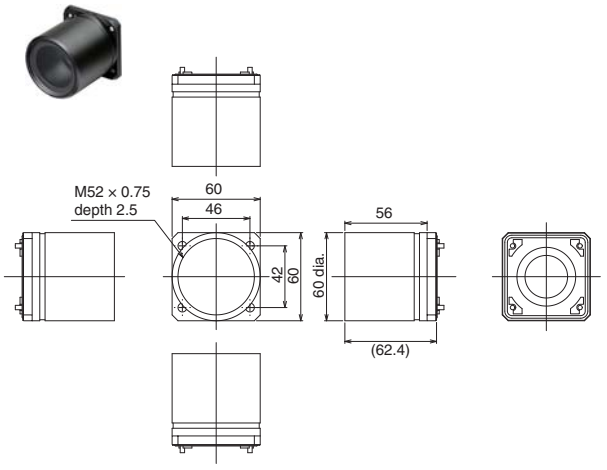

for C-mount Lens (Long)
FHV-XHD-L

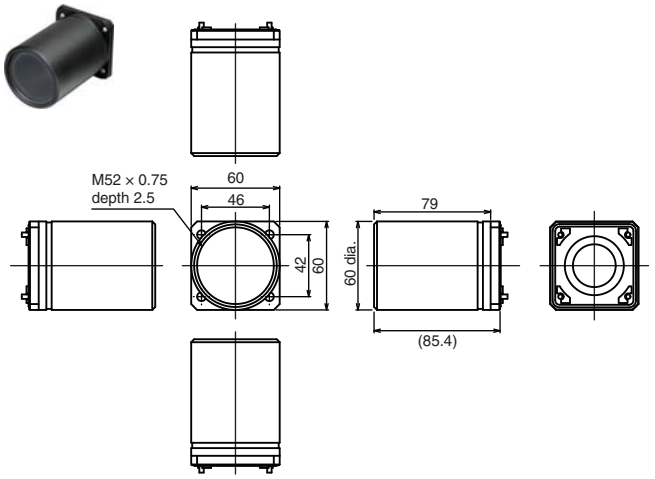

for Lens Modules
FHV-XHD-LEM

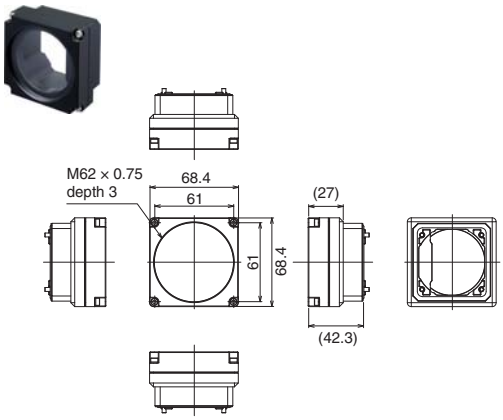

Meaning of Optical Chart

How-to View the Optical Chart

The X axis of the optical chart shows the field of vision (mm).
The Y axis of the optical chart shows the camera installation distance (mm).
The lengths of the fields of view given in the optical charts are the lengths of the Y axis.

All-in-one Models
with Lens Module
FHV7H-□□□□□-S□□

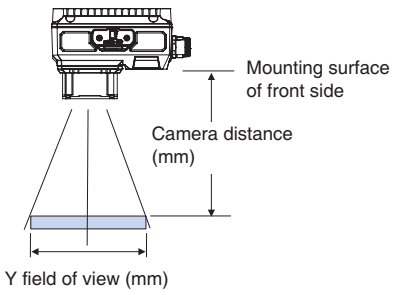

All-in-one Models
with Lens and Lighting Modules
FHV7H-□□□□□-S□□-□□

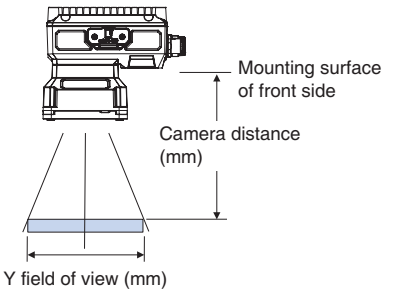

C Mount Models
FHV7H-□□□□□-C

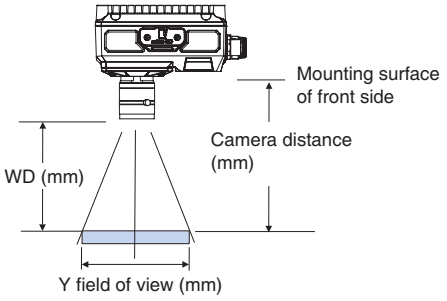

Lens Modules: High-speed Lens Modules (Autofocus)

0.4 million pixels
1.6 million pixels
Smart Cameras:
FHV7H-□004, FHV7H-□016
(for Autofocus Lens FHV-LEM-S series)

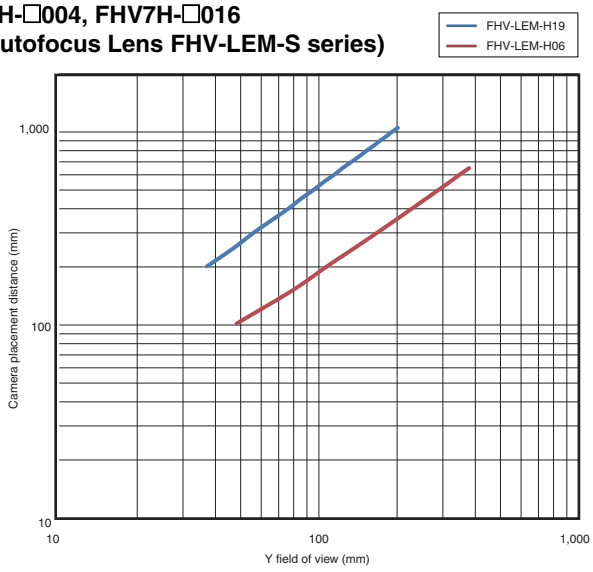

3.2 million pixels
Smart Cameras: FHV7H-□032
(for Autofocus Lens FHV-LEM-S series)

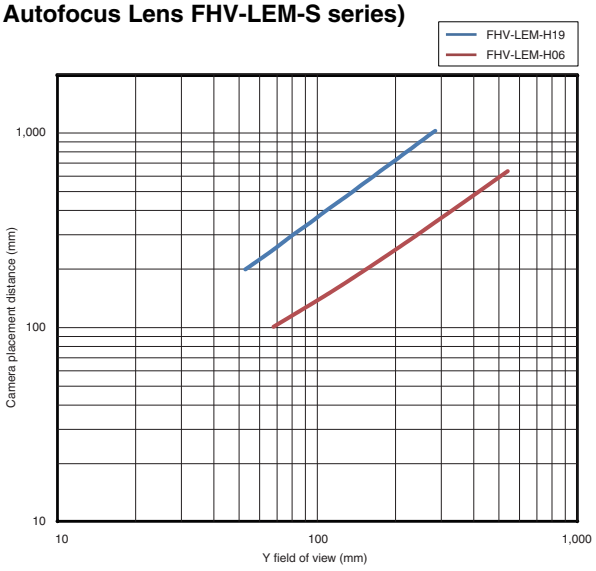

6.3 million pixels
Smart Cameras: FHV7H-□063R
(for Autofocus Lens FHV-LEM-S series)

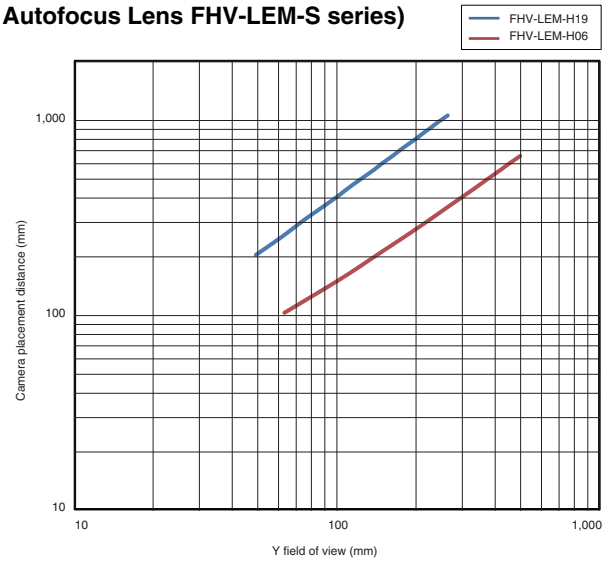

Lens Modules: Standard Lens Modules (Autofocus)

0.4 million pixels
1.6 million pixels
Smart Cameras:
FHV7H-□004, FHV7H-□016
(for Autofocus Lens FHV-LEM-S series)

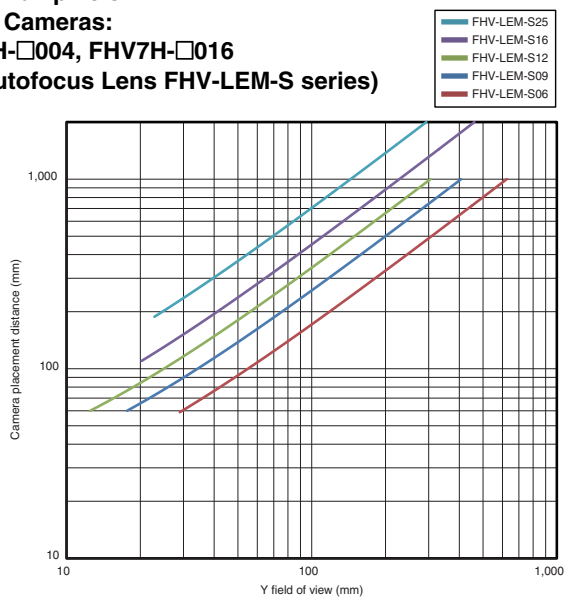

3.2 million pixels
Smart Cameras: FHV7H-□032
(for Autofocus Lens FHV-LEM-S series)

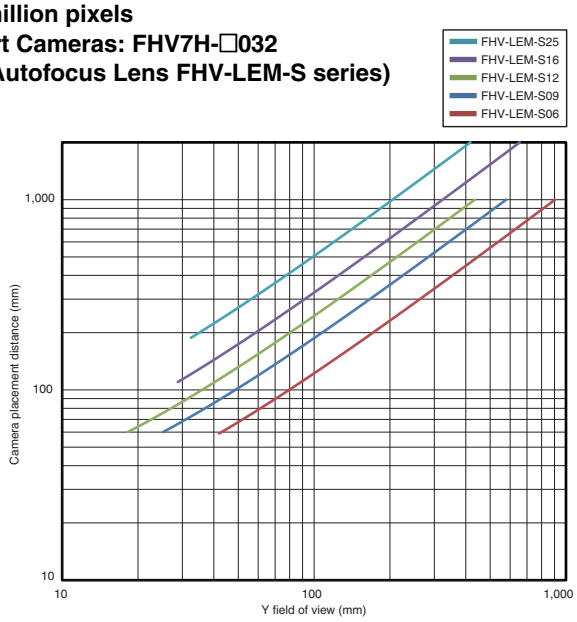

6.3 million pixels
Smart Cameras: FHV7H-□063R
(for Autofocus Lens FHV-LEM-S series)

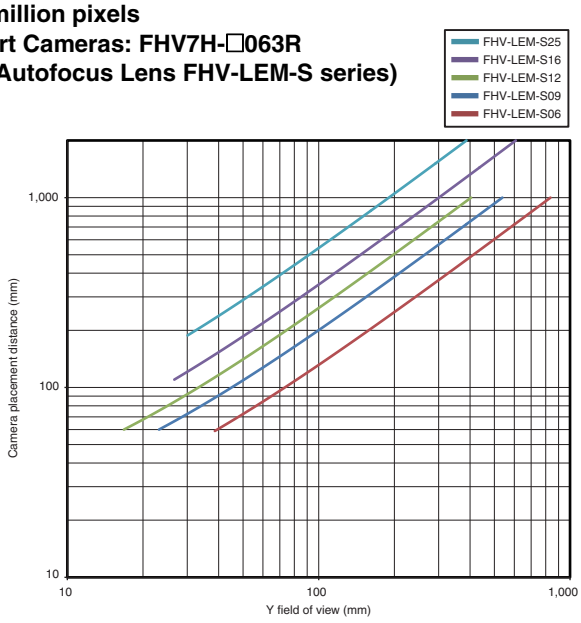

C Mount Lenses: Normal Lenses

0.4 million pixels
1.6 million pixels
Smart Cameras: FHV7H-□004, FHV7H-□016
(for 3Z4S-LE SV-V series)

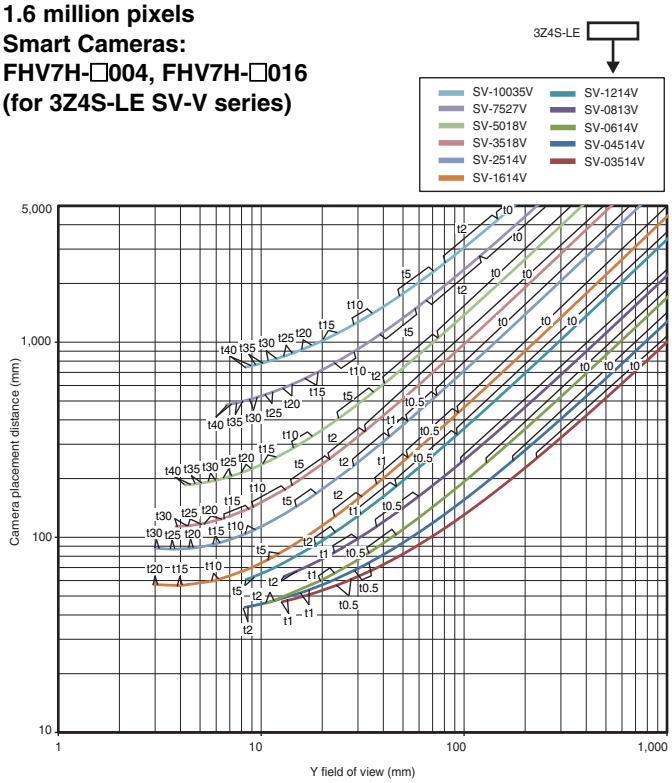

0.4 million pixels
1.6 million pixels
Smart Cameras: FHV7H-□004, FHV7H-□016
(for 3Z4S-LE SV-H series)

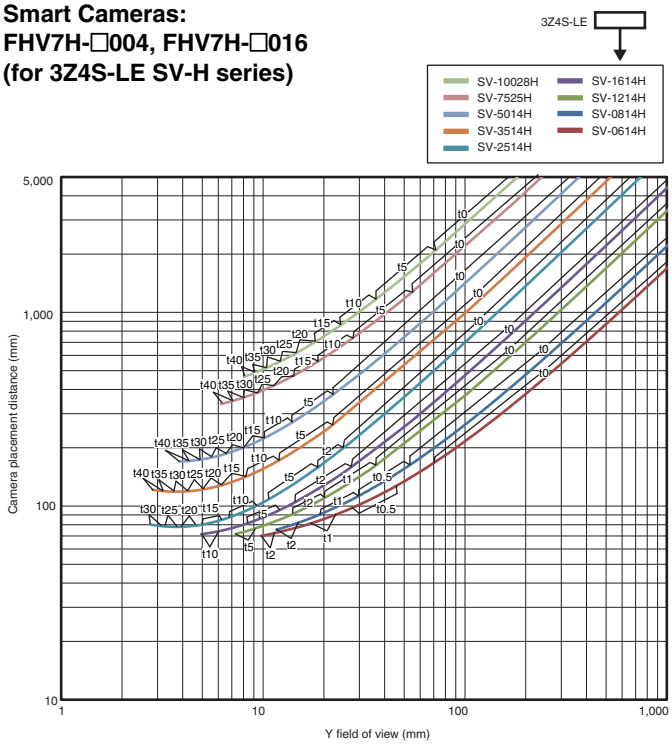

3.2 million pixels
Smart Cameras: FHV7H-□032
(for 3Z4S-LE SV-H series)

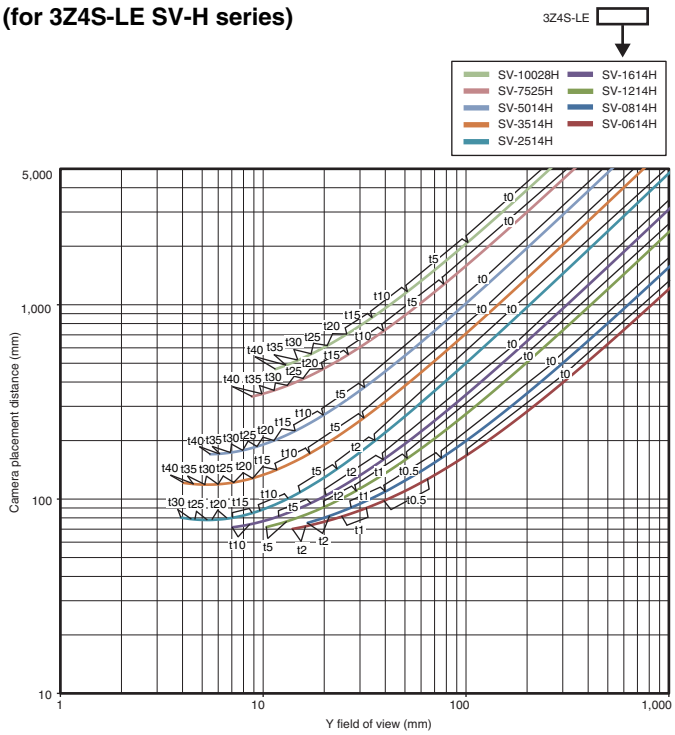

5 million pixels
Smart Cameras: FHV7H-□050
(for 3Z4S-LE SV-H series)

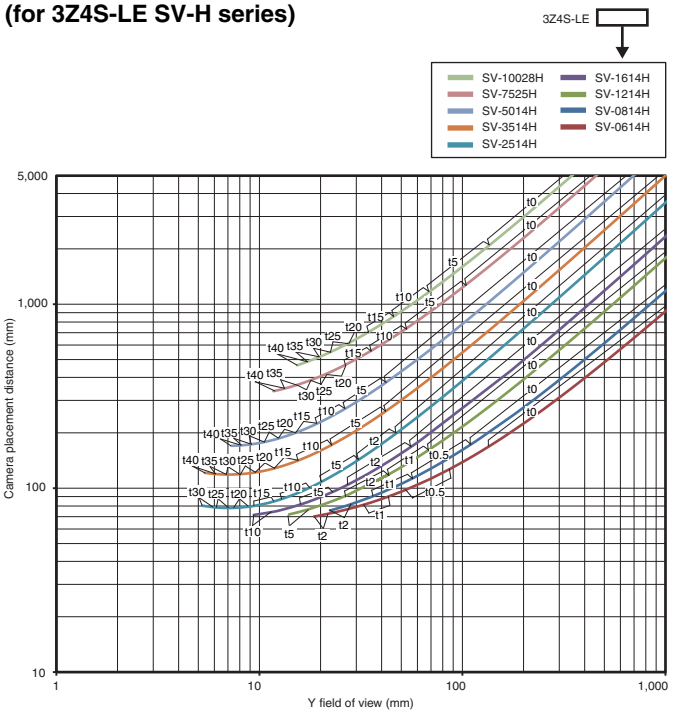

6.3 million pixels
Smart Cameras: FHV7H-□063R
(for 3Z4S-LE SV-H series)

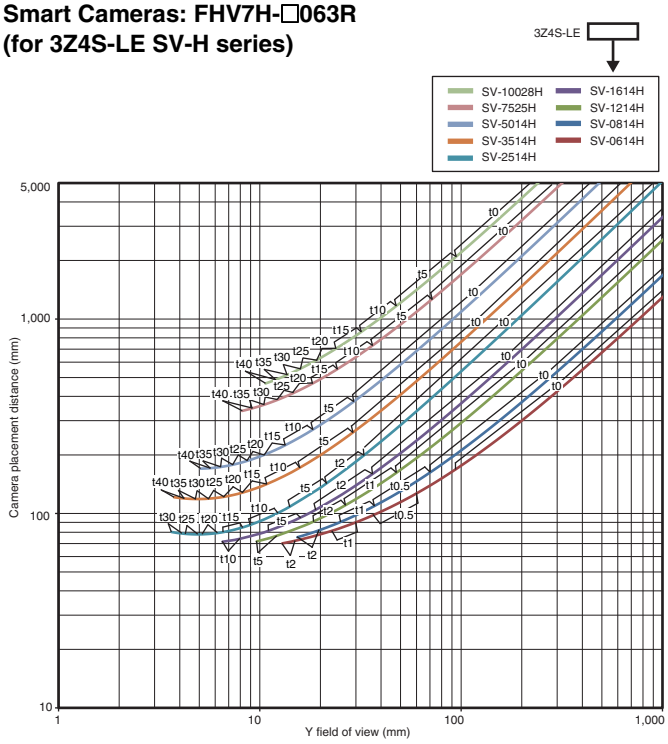

12 million pixels
Smart Cameras: FHV7H-□120R
(for 3Z4S-LE SV-H series)

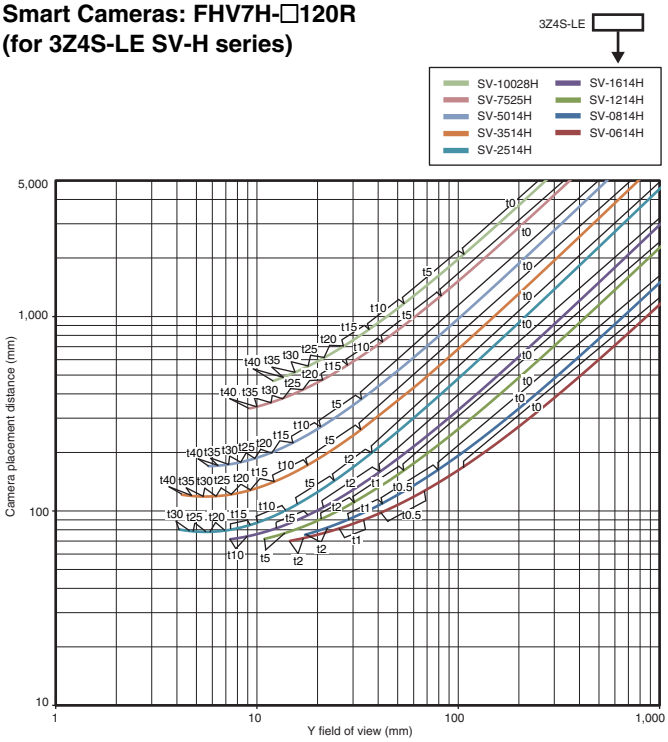

C Mount Lenses: Vibration/Shock-resistance Lens

400,000 pixels
1.6 million pixels
Smart Cameras: FHV7H-□004, FHV7H-□016
(for 3Z4S-LE VS-MCA series)

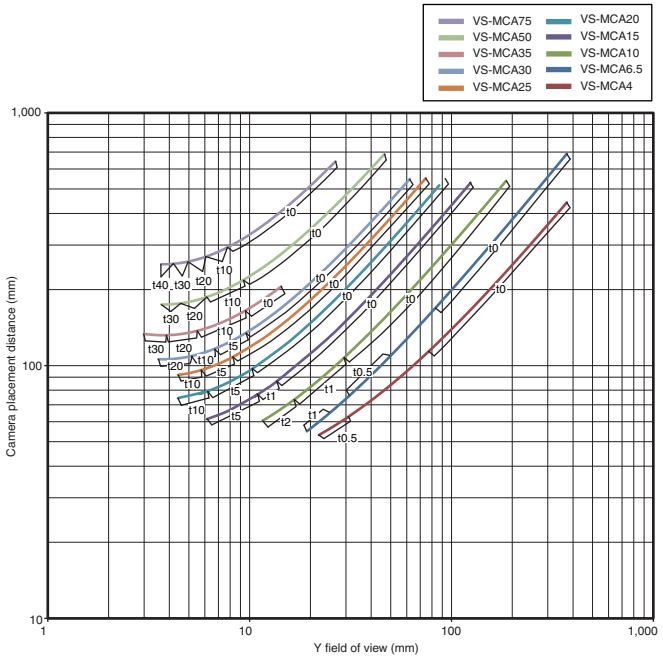

3.2 million pixels
Smart Cameras: FHV7H-□032
(for 3Z4S-LE VS-MCA series)

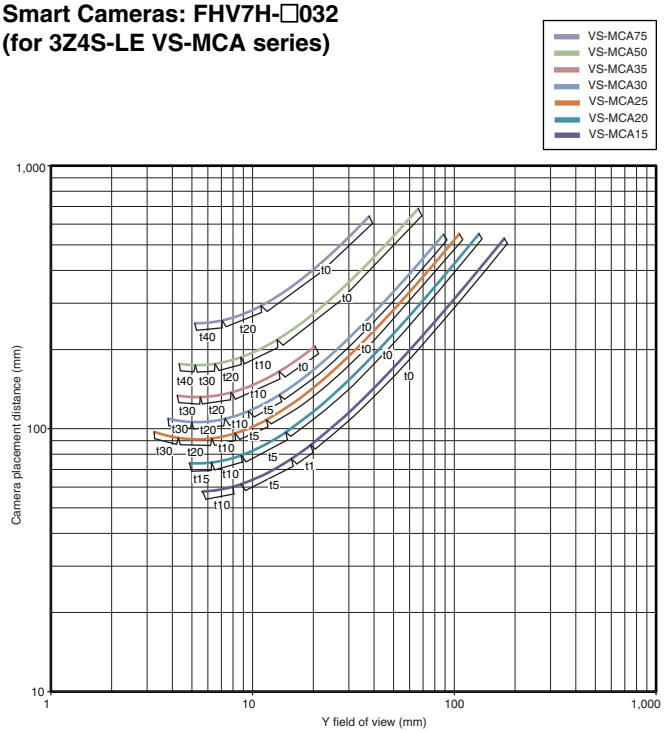

5 million pixels
Smart Cameras: FHV7H-□050
(for 3Z4S-LE VS-MCA series)

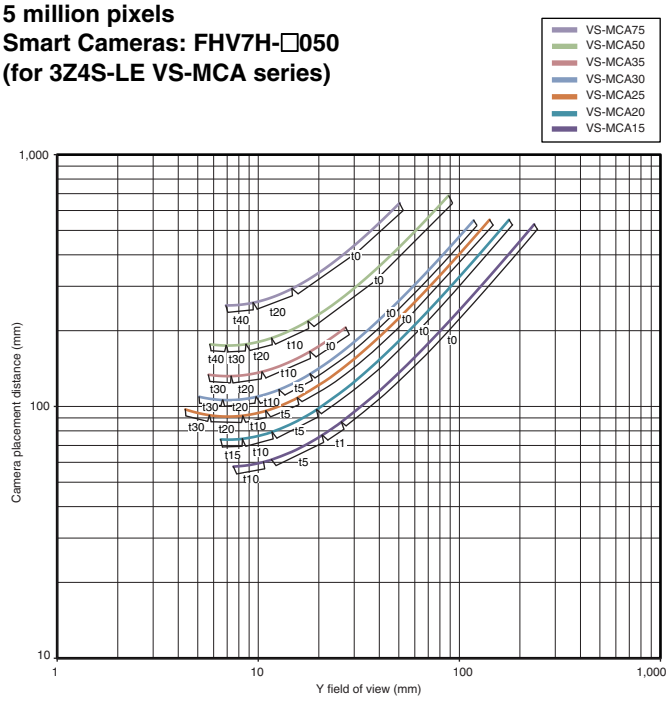

6.3 million pixels
Smart Cameras: FHV7H-□063R
(for 3Z4S-LE VS-MCA series)

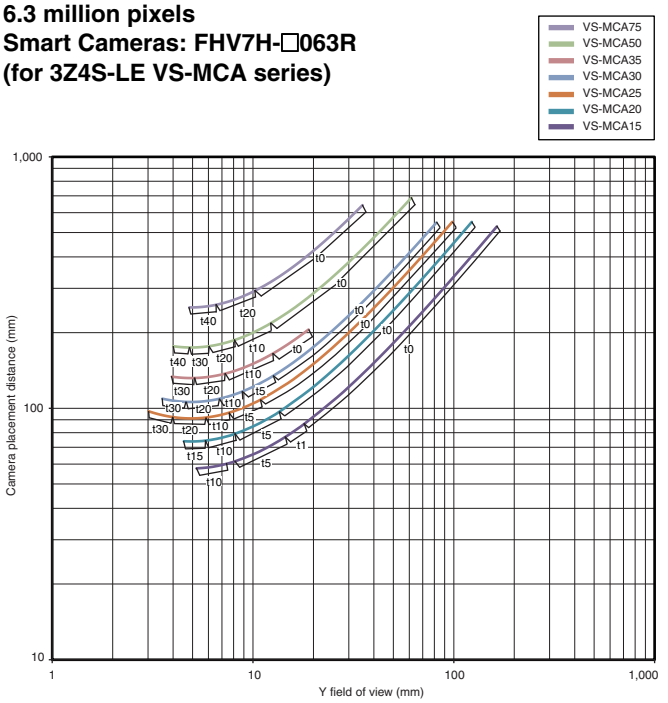

12 million pixels
Smart Cameras: FHV7H-□120R
(for 3Z4S-LE VS-MCA series)

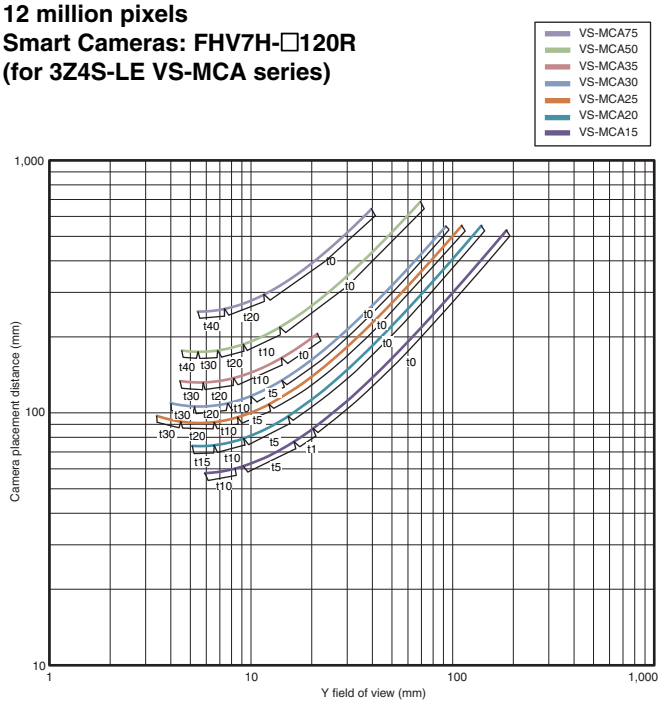

Related Manuals/Catalog

Cat. No.	Series	Manual
Z365	FH/FHV7	Vision System FH/FHV Series User's Manual
Z341	FH/FHV7	Vision System FH/FHV Series Processing Item Function Reference Manual
Z342	FH/FHV7	Vision System FH/FHV Series User's Manual for Communications Settings
Z408	FHV7	Smart Camera FHV Series Setup Manual
Q198	FLV/FL	FLV/FL Vision Accessory CATALOG

・Sysmac is a trademark or registered trademark of OMRON Corporation in Japan and other countries for OMRON factory automation products.
・Think&See is a trademark or registered trademark of OMRON Corporation in Japan and other countries.
・EtherNet/IP™ is a trademark of ODVA.
・EtherCAT® is a registered trademark and patented technology, licensed by Beckhoff Automation GmbH, Germany.
・QR code is the registered trademark of DENSO WAVE.
・The SD, SDHC, microSD, and microSDHC logos are trademarks of SD-3C, LLC.
・Other company names and product names in this document are the trademarks or registered trademarks of their respective companies.
・The product photographs and figures that are used in this catalog may vary somewhat from the actual products.
Microsoft product screen shot(s) reprinted with permission from Microsoft Corporation.
・The permission of Shutterstock.com was received for images that were used.

Terms and Conditions Agreement

Read and understand this catalog.

Please read and understand this catalog before purchasing the products. Please consult your OMRON representative if you have any questions or comments.

Warranties.

(a) Exclusive Warranty. Omron's exclusive warranty is that the Products will be free from defects in materials and workmanship for a period of twelve months from the date of sale by Omron (or such other period expressed in writing by Omron). Omron disclaims all other warranties, express or implied.

(b) Limitations. OMRON MAKES NO WARRANTY OR REPRESENTATION, EXPRESS OR IMPLIED, ABOUT NON-INFRINGEMENT, MERCHANTABILITY OR FITNESS FOR A PARTICULAR PURPOSE OF THE PRODUCTS. BUYER ACKNOWLEDGES THAT IT ALONE HAS DETERMINED THAT THE PRODUCTS WILL SUITABLY MEET THE REQUIREMENTS OF THEIR INTENDED USE.

Omron further disclaims all warranties and responsibility of any type for claims or expenses based on infringement by the Products or otherwise of any intellectual property right. (c) Buyer Remedy. Omron's sole obligation hereunder shall be, at Omron's election, to (i) replace (in the form originally shipped with Buyer responsible for labor charges for removal or replacement thereof) the non-complying Product, (ii) repair the non-complying Product, or (iii) repay or credit Buyer an amount equal to the purchase price of the non-complying Product; provided that in no event shall Omron be responsible for warranty, repair, indemnity or any other claims or expenses regarding the Products unless Omron's analysis confirms that the Products were properly handled, stored, installed and maintained and not subject to contamination, abuse, misuse or inappropriate modification. Return of any Products by Buyer must be approved in writing by Omron before shipment. Omron Companies shall not be liable for the suitability or unsuitability or the results from the use of Products in combination with any electrical or electronic components, circuits, system assemblies or any other materials or substances or environments. Any advice, recommendations or information given orally or in writing, are not to be construed as an amendment or addition to the above warranty.

See http://www.omron.com/global/ or contact your Omron representative for published information.

Limitation on Liability; Etc.

OMRON COMPANIES SHALL NOT BE LIABLE FOR SPECIAL, INDIRECT, INCIDENTAL, OR CONSEQUENTIAL DAMAGES, LOSS OF PROFITS OR PRODUCTION OR COMMERCIAL LOSS IN ANY WAY CONNECTED WITH THE PRODUCTS, WHETHER SUCH CLAIM IS BASED IN CONTRACT, WARRANTY, NEGLIGENCE OR STRICT LIABILITY.

Further, in no event shall liability of Omron Companies exceed the individual price of the Product on which liability is asserted.

Suitability of Use.

Omron Companies shall not be responsible for conformity with any standards, codes or regulations which apply to the combination of the Product in the Buyer's application or use of the Product. At Buyer's request, Omron will provide applicable third party certification documents identifying ratings and limitations of use which apply to the Product. This information by itself is not sufficient for a complete determination of the suitability of the Product in combination with the end product, machine, system, or other application or use. Buyer shall be solely responsible for determining appropriateness of the particular Product with respect to Buyer's application, product or system. Buyer shall take application responsibility in all cases.

NEVER USE THE PRODUCT FOR AN APPLICATION INVOLVING SERIOUS RISK TO LIFE OR PROPERTY OR IN LARGE QUANTITIES WITHOUT ENSURING THAT THE SYSTEM AS A WHOLE HAS BEEN DESIGNED TO ADDRESS THE RISKS, AND THAT THE OMRON PRODUCT(S) IS PROPERLY RATED AND INSTALLED FOR THE INTENDED USE WITHIN THE OVERALL EQUIPMENT OR SYSTEM.

Programmable Products.

Omron Companies shall not be responsible for the user's programming of a programmable Product, or any consequence thereof.

Performance Data.

Data presented in Omron Company websites, catalogs and other materials is provided as a guide for the user in determining suitability and does not constitute a warranty. It may represent the result of Omron's test conditions, and the user must correlate it to actual application requirements. Actual performance is subject to the Omron's Warranty and Limitations of Liability.

Change in Specifications.

Product specifications and accessories may be changed at any time based on improvements and other reasons. It is our practice to change part numbers when published ratings or features are changed, or when significant construction changes are made. However, some specifications of the Product may be changed without any notice. When in doubt, special part numbers may be assigned to fix or establish key specifications for your application. Please consult with your Omron's representative at any time to confirm actual specifications of purchased Product.

Errors and Omissions.

Information presented by Omron Companies has been checked and is believed to be accurate; however, no responsibility is assumed for clerical, typographical or proofreading errors or omissions.

Note: Do not use this document to operate the Unit.

OMRON Corporation **Industrial Automation Company**
Kyoto, JAPAN
Contact: www.ia.omron.com

Regional Headquarters
OMRON EUROPE B.V.
Wegalaan 67-69, 2132 JD Hoofddorp
The Netherlands
Tel: (31)2356-81-300/Fax: (31)2356-81-388

OMRON ELECTRONICS LLC
2895 Greenspoint Parkway, Suite 200
Hoffman Estates, IL 60169 U.S.A.
Tel: (1) 847-843-7900/Fax: (1) 847-843-7787

OMRON ASIA PACIFIC PTE. LTD.
No. 438A Alexandra Road # 05-05/08 (Lobby 2),
Alexandra Technopark,
Singapore 119967
Tel: (65) 6835-3011/Fax: (65) 6835-2711

OMRON (CHINA) CO., LTD.
Room 2211, Bank of China Tower,
200 Yin Cheng Zhong Road,
PuDong New Area, Shanghai, 200120, China
Tel: (86) 21-5037-2222/Fax: (86) 21-5037-2200

Authorized Distributor:

© OMRON Corporation 2018-2020 All Rights Reserved.
In the interest of product improvement,
specifications are subject to change without notice.

CSM_3_1
Cat. No. Q264-E1-05 0320 (1118)